CWDM in Japanese Data Centers

How Cisco IT Used CWDM to Interconnect Japanese Data Center Sites

A Cisco on Cisco Case Study: Inside Cisco IT

Overview

- Challenge

  Provide reliable, high-speed, low-cost connectivity solution between new data center and two sales offices in Tokyo

- Solution

  Cisco Course Wave Division Multiplexing Gigabit Interface Converter solution networked through cost-effective dark fiber

- Results

  Savings of more than 60 percent over conventional leased Gigabit Ethernet service with ability to quadruple bandwidth for little added cost

- Next Steps

  Take advantage of new flexibility to deploy additional “channels” on existing fiber to support new applications

Challenge: Need more circuits at lower cost

- Creating a standalone data center required three circuits between the data center and the two offices
- Using the available leased Gigabit Ethernet service to connect the new data center would be too expensive
- To provide viable connectivity between the new data center and the two sales offices, Cisco Japan IT needed a high-speed, low-cost solution that would be reliable and easy to manage

Solution: Dark Fiber

- Leased three dark fibers between the data center, Akasaka office, and Shinjuku office on diverse paths
- Multi-site point-to-point topology selected because of its simplicity and cost
- Using Enhanced Interior Gateway Routing Protocol (EIGRP), the network detects a failure in one of the links and automatically reroutes traffic to the redundant path

Solution: CWDM GBIC Solution

- Installed a Cisco Course Wave Division Multiplexing (CWDM) Gigabit Interface Converter (GBIC) and Cisco CWDM optical add/drop multiplexing (OADM) module at each site
- GBICs convert Gigabit Ethernet electrical signals into an optical single-mode fiber interface
- GBICs plug into existing Cisco 7603 routers at each location. No dedicated or additional routers were required
- CWDM OADM modules (passive optical components that multiplex multiple wavelengths from multiple fiber pairs into one fiber strand) are connected to the CWDM GBICs via single-mode fiber using dual SC connectors
- Neither the CWDM GBIC or OADM modules require configuration

Solution: Summary (cont.)

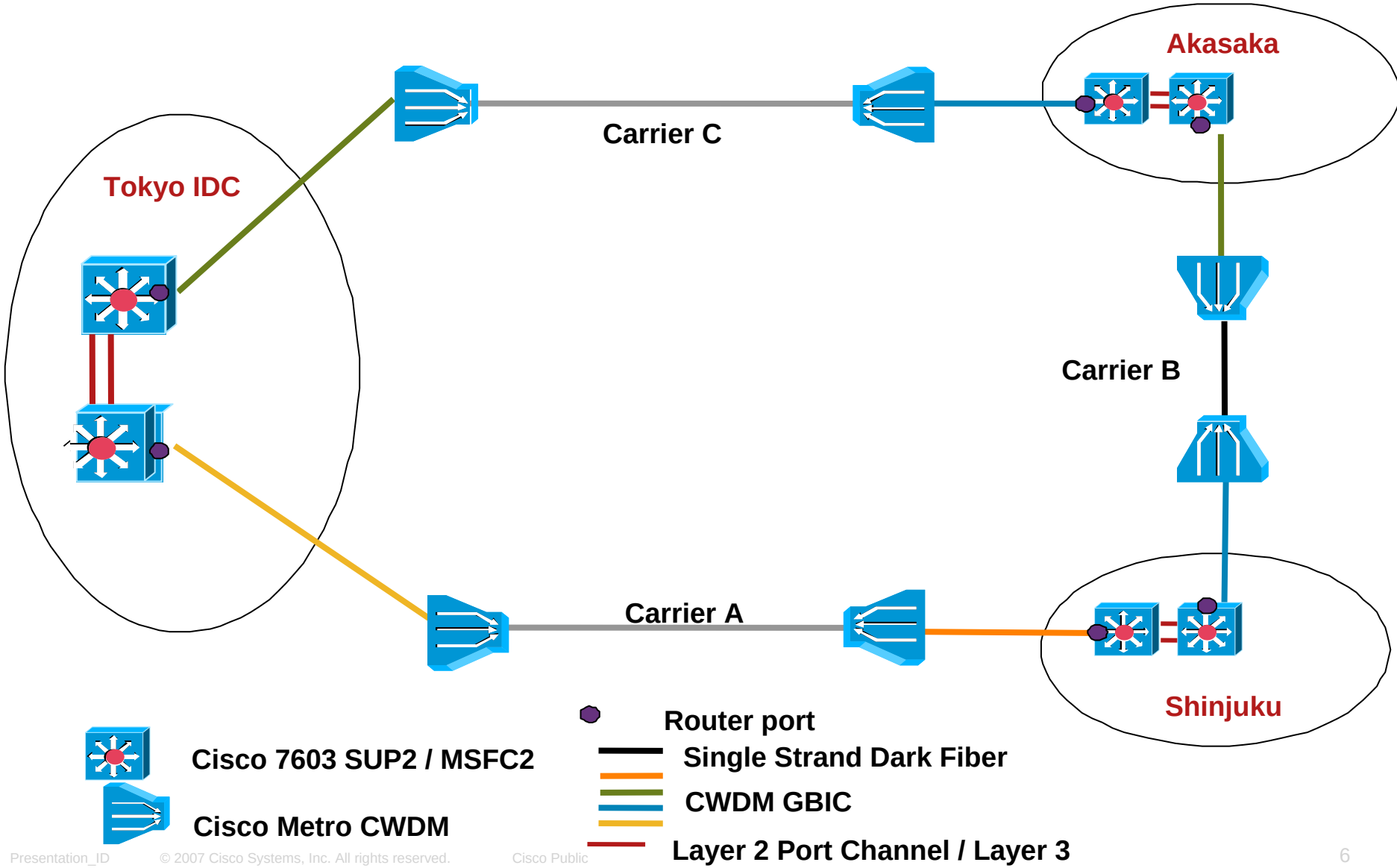

Results: Expandability

- Cisco CWDM GBIC solution supports up to four 1-Gigabit channels over a single fiber
- Additional channels can be quickly deployed by plugging in another CWDM GBIC into a GBIC port on the Cisco 7603 router and connecting it to the OADM with a pair of single-mode fibers
- No new fibers or changes to the dark fibers are required
- Adding a Gigabit of bandwidth takes only about five seconds and costs about $750

Results: Reduced Cost, Better Service

- Monthly cost reduced from US$27,000 for traditional leased Gigabit Ethernet service to US$9900 for dark fiber using CWDM technology
- Bandwidth can be doubled, tripled, or even quadrupled without additional fiber by adding relatively inexpensive CWDM GBICs and OADM modules
- Total route diversity has eliminated single points of failure and ensures high availability between sites

Next Steps: Taking Advantage of Flexibility

- One of the four channels on the CWDM is already being used to carry secure, segregated lab traffic into the DMZ, located at the new data center, from the existing engineering lab at the Shinjuku office. Other labs will follow.
- The CWDM dark fiber solution can easily support technology demonstrations between the Shinjuku and Akasaka offices without impacting production traffic
- The relocation of TAC and engineering groups from the Shinjuku office to less expensive facilities will be made easier by extending dark fiber from the data center

To read the entire case study, or for additional Cisco IT case studies on a variety of business solutions, visit Cisco on Cisco: Inside Cisco IT
www.cisco.com/go/ciscoit

Americas Headquarters
Cisco Systems, Inc.
170 West Tasman Drive
San Jose, CA 95134-1706
USA
www.cisco.com
Tel: 408 526-4000
800 553-NETS (6387)
Fax: 408 527-0883

Asia Pacific Headquarters
Cisco Systems, Inc.
168 Robinson Road
#28-01 Capital Tower
Singapore 068912
www.cisco.com
Tel: +65 6317 7777
Fax: +65 6317 7799

Europe Headquarters
Cisco Systems International BV
Haarlerbergpark
Haarlerbergweg 13-19
1101 CH Amsterdam
The Netherlands
www-europe.cisco.com
Tel: +31 0 800 020 0791
Fax: +31 0 20 357 1100

Cisco has more than 200 offices worldwide. Addresses, phone numbers, and fax numbers are listed on the Cisco Website at **www.cisco.com/go/offices.**