重数Catalyst的6800IA FEX堆栈成员

目录

简介

本文提供推荐的步骤重数结构扩展器(FEX)堆栈成员，在6800IA在制作后部署和。本文是可适用的对所有6800IA部署不考虑该parent的交换机平台- Catalyst 6500、Catalyst 6807或者Catalyst 6880 - 运行Cisco IOS 15.1(2)SY软件版本。

关于运行Cisco IOS 15.x SY软件版本的设备，请参阅Cisco IOS 15.2SY -即时访问-重数的FEX交换机ID。Cisco IOS 15.1(2)SY6、15.2(1)SY1，或以上版本支持此功能。

要求

注意重新编号进程在这些区域将有停机时间：

- 对将有成员被重数的堆叠的控制台访问。
- 对parent交换机thoughout的SSH/Console访问重新编号进程。

初始配置

如此图表所显示，有运行的Sup2T的Catalyst 6500 Cisco IOS软件版本15.2(1)SY1是parent，并且FEX 101是将被重数的堆叠。

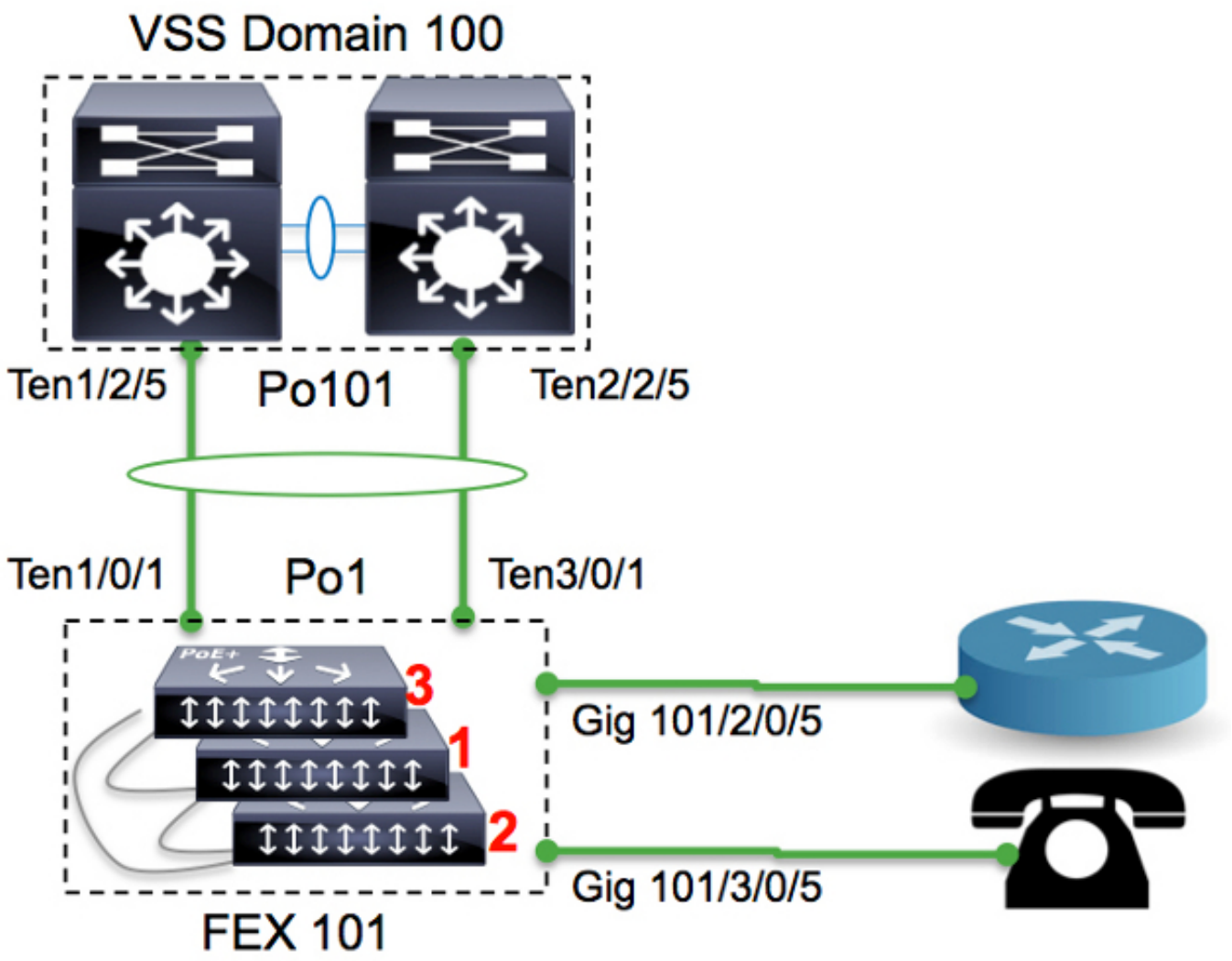


```
6500-FEX#remote command fex 101 show switch
Switch/Stack Mac Address : f078.16ed.af00
                                          H/W   Current
Switch#  Role   Mac Address     Priority Version  State
-----------------------------------------------------------
*1       Master f078.16ed.af00     1       4       Ready   <=master based on the MAC address
 2       Member f078.16ed.bc00     1       4       Ready
 3       Member f078.16ed.d780     1       4       Ready
```

这里，交换机被重数如下：

- 交换机 3--> Switch1
- 交换机 1--> Switch2
- 交换机 2--> Switch3

注意堆栈成员的控制台端口不显示什么，并且那里是无响应。

重数堆栈成员

如果在讨论的堆叠不在制作，请遵从步骤2， 3和5。

如果堆叠在制作和所有配置需要保留，请遵从所有步骤。

步骤 1：构件更新后的配置

在图表中，路由器连接对接口2/0/5，并且VoIP电话连接建立接口3/0/5。一旦交换机被重数(3到1，1到2和2到3)，这些连接将分别为在3/0/5和1/0/5。当堆叠重新连接对parent时，推送配置的最后版本到根据交换编号的端口。换句话说， 3/0/5将有端口的配置连接对路由器。

在您开始重新编号进程为了减少停机时间前，有配置的一个更新版本是非常关键的。

旧的配置

```
!
interface GigabitEthernet101/2/0/5
 description ToRouterA
 switchport switchport trunk allowed vlan 1-100
switchport mode trunk
!
interface GigabitEthernet101/3/0/5
 description Phone-3F295
 switchport switchport trunk allowed vlan 5,15
 switchport trunk native vlan 5
 switchport mode trunk
```

新的配置

```
!
interface GigabitEthernet101/3/0/5
 description ToRouterA
 switchport switchport trunk allowed vlan 1-100
switchport mode trunk
!
interface GigabitEthernet101/1/0/5
 description Phone-3F295
 switchport switchport trunk allowed vlan 5,15
 switchport trunk native vlan 5
 switchport mode trunk
```

没有需要更新上行链路端口信道配置，因为将由瞬时访问控制面板协议自动地更新(例如卫星发现协议(SDP))。

步骤 2：断开斯塔克

断开上行链路端口(在parent侧或堆叠侧)或关闭从parent交换机的端口。在本例中，上行链路端口被关闭。

```
6500-FEX(config)#int te1/2/5
6500-FEX(config-if)#shut
6500-FEX(config)#int te2/2/5
6500-FEX(config-if)#shut

6500-FEX#show etherchannel 101 summary
<snip>
------+-------------+-----------+-------------------------
101    Po101(SD)        -        Te1/2/5(D)     Te2/2/5(D)

6500-FEX#remote comm fex 101 show etherchannel summ
<snip>
------+-------------+-----------+-------------------------
1      Po1(SU)          -        Te1/0/1(P)  Te3/0/1(P)
```

当所有上行端口断开， FEX101的所有堆栈成员将重新加载。

启动日志

```
CPU rev: BImage passed digital signature verificationBoard rev: 5Testing DataBus
...Testing AddressBus...
<snip>
Loading "flash:/c6800ia-universalk9-mz.152-3m.E1.bin"...Verifying image
flash:/c6800ia-universalk9mz.152-3m.E1.bin.........
<snip>
Press RETURN to get started!

FEX-0>
FEX-0>
FEX-0>
FEX-0>
```

此时此刻，所有主机端口(例如， Gig101/1/0/5和Gig101/2/0/5如图表所显示)应该是adminstratively向下。

步骤 3：重数堆栈成员

6800IA交换机仍然被捆绑，堆叠(没有diconnected的堆叠电缆)。如果有需要重申他们然后推荐给停电所有客户端， dis/重新连接堆叠电缆，并且请接通他们。

```
FEX-0(config)#switch 3 renumber 1
WARNING: Changing the switch number may result in a configuration change for that switch.
The interface configuration associated with the old switch number will remain as
a provisioned configuration.
Do you want to continue?[confirm]               <<=== <enter>
Changing Switch Number 3 to Switch Number 1
New Switch Number will be effective after next reboot FEX-0(config)#switch 1 renumber 2
WARNING: Changing the switch number may result in a configuration change for that switch.
The interface configuration associated with the old switch number will remain as
a provisioned configuration.
Do you want to continue?[confirm]              <<=== <enter>
Changing Switch Number 1 to Switch Number 2
New Switch Number will be effective after next reboot FEX-0(config)#switch 2 renumber 3
WARNING: Changing the switch number may result in a configuration change for that switch.
The interface configuration associated with the old switchnumber will remain as
a provisioned configuration.
Do you want to continue?[confirm]              <<=== <enter>
Changing Switch Number 1 to Switch Number 2
New Switch Number will be effective after next reboot
```

步骤 4：运用新的配置

与被断开的FEX堆叠， parent交换机应该仍然有提供：

```
6500-FEX#sh run | beg provision
<snip>
module provision fex 101
 slot 1 slot-type 357 port-type 61 number 48  virtual-slot 50
 slot 2 slot-type 357 port-type 61 number 48  virtual-slot 51
 slot 3 slot-type 357 port-type 61 number 48  virtual-slot 53
<snip>
```

申请在parent交换机的新的配置FEX 101。

```
!
```

```
interface GigabitEthernet101/3/0/5
 descrition ToRouterA
 switchport switchport trunk allowed vlan 1-100
switchport mode trunk
!
interface GigabitEthernet101/1/0/5
 description Phone-3F295
 switchport switchport trunk allowed vlan 5,15
 switchport trunk native vlan 5
 switchport mode trunk
!
```

步骤 5：重新连接斯塔克

通过启动Port-Channel重新连接堆叠101。

```
6500-FEX(config)#int te1/2/5
6500-FEX(config-if)#no shut
6500-FEX(config)#int te2/2/5
6500-FEX(config-if)#no shut
```

6800IA控制台日志：

```
FEX-0>
%LINK-3-UPDOWN: Interface TenGigabitEthernet2/0/2, changed state to up
%LINEPROTO-5-UPDOWN: Line protocol on Interface TenGigabitEthernet2/0/2,
changed state to up
%LINK-3-UPDOWN: Interface Port-channel1, changed state to up
%LINEPROTO-5-UPDOWN: Line protocol on Interface Port-channel1, changed state to up
%LINK-3-UPDOWN: Interface TenGigabitEthernet1/0/1, changed state to up
%LINEPROTO-5-UPDOWN: Line protocol on Interface TenGigabitEthernet1/0/1,
changed state to up
FEX-101>
FEX-101> 6500-FEX#remote command fex 101 show switch
Switch/Stack Mac Address : f078.16ed.af00
                                           H/W   Current
Switch#  Role   Mac Address     Priority Version  State
------------------------------------------------------------
 1       Member f078.16ed.d780     1       4       Ready
*2      Master f078.16ed.af00     1       4       Ready <= master based on the MAC address
 3       Member f078.16ed.bc00     1       4       Ready
```

您看到上述，堆栈成员被重数(比较MAC地址报告此处在“初始配置”部分给的那些)。

```
6500-FEX#show etherchannel 101 summary
<snip>
------+-------------+-----------+-------------------------
101    Po101(SU)        -        Te1/2/5(P)     Te2/2/5(P)

6500-FEX#remote comm fex 101 show etherchannel summ
<snip>
------+-------------+-----------+-------------------------
1      Po1(SU)          -        Te1/0/1(P)    Te2/0/1(P)
```

相关信息

- 思科Catalyst即时访问解决方案白皮书
- 如何配置即时访问(PDF)
- Catalyst 6800IA交换机硬件安装指南
- 技术支持和文档 - Cisco Systems