IoT Service (Wired)

Overview

Note **Cisco DNA Spaces** is now **Cisco Spaces**. We are in the process of updating our documentation with the new name. This includes updating GUIs and the corresponding procedures, screenshots, and URLs. For the duration of this activity, you might see occurrences of both **Cisco DNA Spaces** and **Cisco Spaces**. We take this opportunity to thank you for your continued support.

Overview of IoT Service (Wired)

Cisco Spaces enables end-to-end wired and wireless IoT device management, monitoring, and business outcome delivery at an enterprise scale using the following:

- Cisco Spaces: IoT Service
- Cisco Spaces: IoT Device Marketplace
- Cisco Spaces App Center

In addition to serving as the management hub for wireless IoT devices, IoT Service can now integrate with Cisco Catalyst 9300 and 9400 Series Switches from Release 17.3.3 or later to receive IoT service (wired) data from sensors, such as:

- Passive infrared (PIR) sensors for presence detection
- Temperature and humidity sensors
- Smart lighting devices
- Smart shades
- Ethernet port status
- Smart power distribution unit (PDU)
- Hella Camera

Integrating IoT service (wired) with the Cisco Catalyst 9300 and 9400 Series Switches series platform requires the following:

- Cisco Spaces: Connector
- A IoT service (wired) gateway deployed and managed by Cisco Spaces

Cisco Catalyst 9300 and 9400 Series Switches can send critical IoT data to IoT service (wired). IoT service (wired) can then transmit the information to:

- Business outcome applications on Cisco Spaces
- Cisco Spaces App Center using the Firehose API

Figure 1: Data flow in IoT Service (Wired)

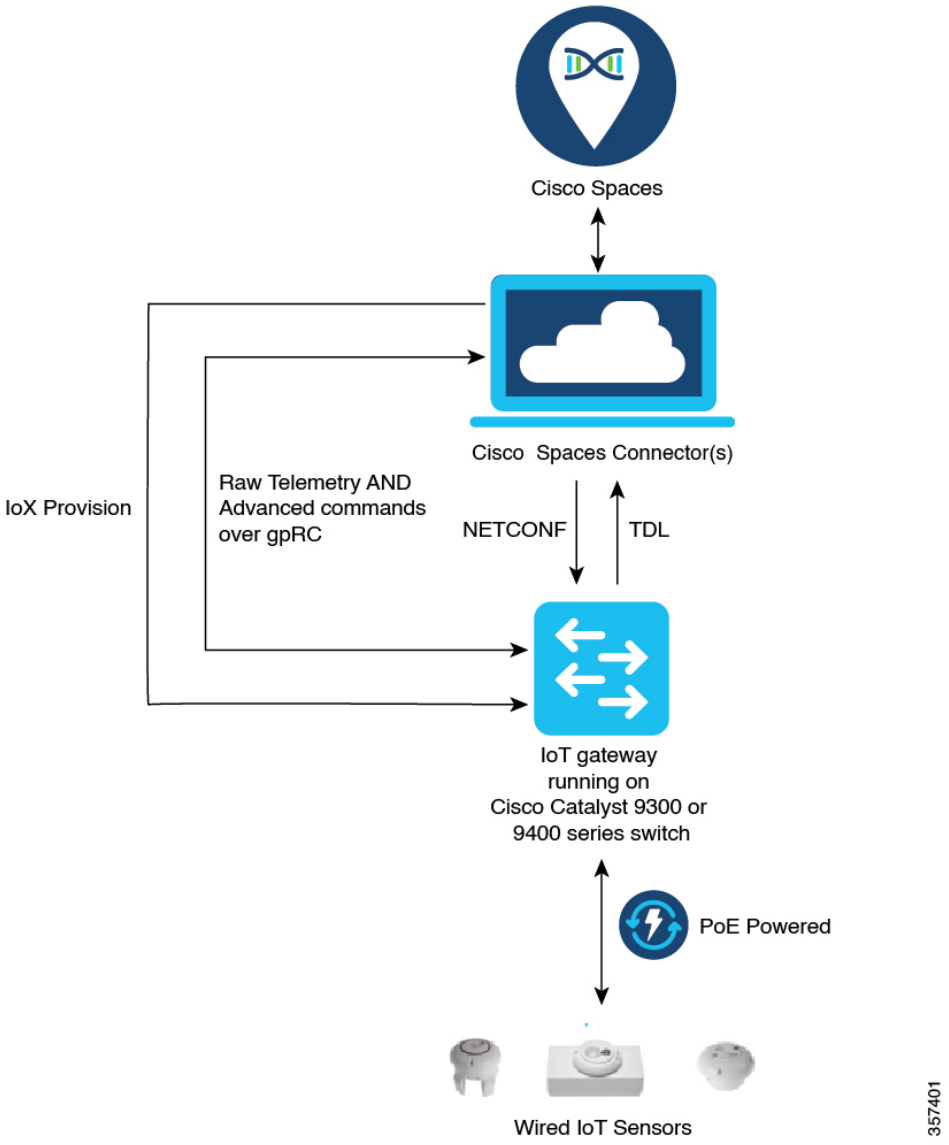

Compatibility Matrix for IoT Service (Wired)

Application Name	Support for IoT Service (Wired)
Cisco Spaces: Connector Docker	2.0.455 and later
Cisco Spaces: Connector OVA	2.3 and later
Cisco Prime Infrastructure	Cisco Prime Infrastructure Release 3.8 MR1
Catalyst Center (for map import)	Catalyst Center Release 2.1.1 and later
Switch as a gateway	• Cisco Catalyst 9300 Series Switches • Cisco Catalyst 9400 Series Switches Cisco IOS XE Amsterdam 17.3.x and later releases.
Wired Application Version	1.0.46 and later

IoT service (wired) is not supported with Cisco Spaces tenants or deployments leveraging the following configurations:

- Connecting directly with controller
- CMX Tethering

Prerequisites for Cisco Spaces: IoT Service (Wired)

The following are the necessary prerequisites to get you started with Cisco Spaces: IoT Service (Wired):

- Install Cisco Spaces: Connector in your network.
- Configure a network with one or more Cisco Catalyst 9300 and 9400 Series Switches, Release 17.3.3 or later.
- Switches must have **Cisco DNA Advantage** subscription.
- Deploy wired sensors in your network. See Compatibility Matrix for IoT Service (Wired) , on page 3 .
- Ensure that Cisco Spaces is configured with maps either from Cisco Prime Infrastructure or Catalyst Center.
- Configure AAA on aCisco Catalyst 9300 Series Switches or a Cisco Catalyst 9400 Series Switches before adding it to Cisco Spaces by running these commands in:
  - **aaa new-model**
  - **aaa authentication login default local**
  - **aaa authorization exec default local**

  For more information, see **Command Reference, Cisco IOS XE Amsterdam 17.3.x (Catalyst 9300 Switches)**
- Perform NTP synchronization across wireless controllers, Cisco Spaces: Connectors, and switches in the network.

- Enable NETCONF on Cisco Catalyst 9300 or 9400 Series Switches on port 830, along with permission to use NETCONF.

Note Cisco Catalyst 9300 and 9400 Series Switches require a local privilege level 15 user to use NETCONF. Additionally, the user must be a password-protected local user, because public-key authentication is not supported.

Design Prerequisites

Ensure you have the following information handy before proceeding:

Figure 2: Design Prerequisites

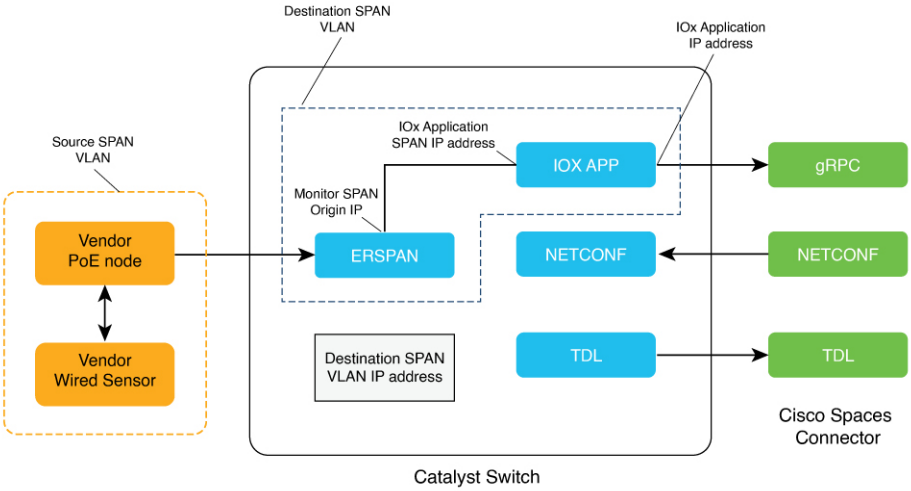

- **Destination SPAN VLAN**: The VLAN used to send Encapsulated Remote Switched Port Analyzer (ERSPAN) traffic from Power over Ethernet (PoE) nodes to Cisco IOx App. You can use an existing VLAN or create a new one. This VLAN can also be local to the switch.
- **Destination SPAN VLAN IP address**: This is the Switched Virtual Interface (SVI) or the IP address of the destination VLAN that can be used to route traffic. If you are using an existing VLAN, you can provide the same IP address. We recommend that you create a new VLAN so that you can keep the ERSPAN traffic local without impacting the existing configuration. Note that this VLAN is used only within the switch for the SPAN traffic.
- **Source SPAN VLAN list:** List of VLANs to which the wired devices are connected. The traffic on these VLANs are monitored. If the wired devices are connected to multiple VLANs, enter the VLANs separated by a comma.
- **Monitor SPAN origin IP address**: This is the source IP address of the monitor session. This can be from the SPAN VLAN. This can also be the same as the destination VLAN IP address.
- **IoX application Span IP Address**
- **Application Cisco Spaces Connector VLAN**: This is the VLAN on which the connector is reachable (for management or data). You can configure the Cisco IOx App's second interface to use this VLAN to

send traffic to the connector. This VLAN can be the same as the wired PoE node VLAN. The connector must be permitted to accept communications from the Cisco IOx application.

- **DHCP**: When enabled, DHCP allocates an IP address from the **Application DNA Spaces Connector VLAN** to the Cisco IOx App's second interface.
- **IoX application IP address**: This is the IP address that you must manually configure for the Cisco IOx App's second interface, and is used to communicate with the Connector. This is not required if you select DHCP.
- **IoX application netmask**: This is the IP subnet mask that you must manually configure for the Cisco IOx App's second interface, and is used to communicate with the connector. This is not required if you select DHCP.
- **IoX application gateway address**: This is the IP address that you must manually configure for the Cisco IOx App's second interface, and is used to communicate with the connector. This is not required if you select DHCP.

Figure 3: Sample Configuration

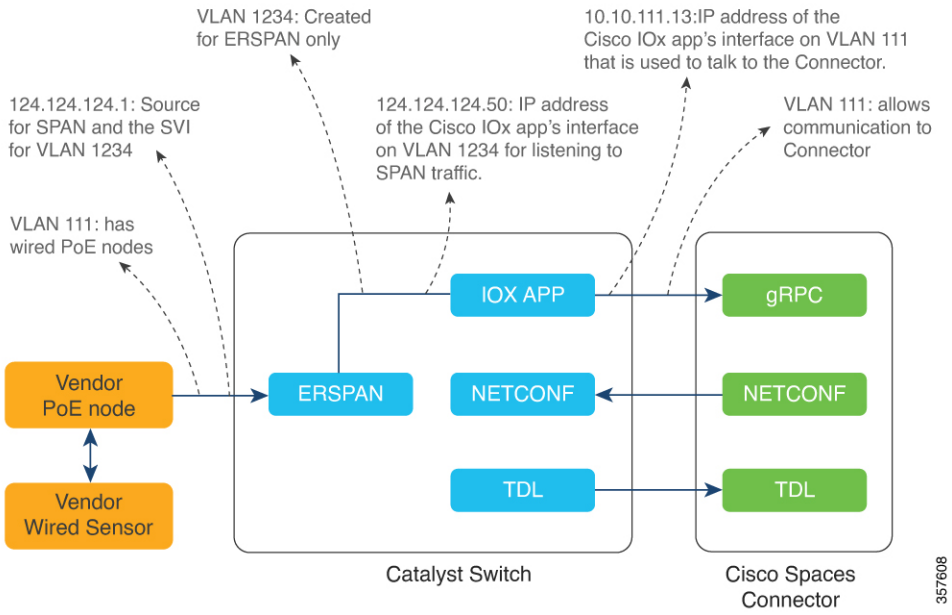

Prerequisites for Cisco Spaces: IoT Service (Wired)

The following are the necessary prerequisites to get you started with Cisco Spaces: IoT Service (Wired):

- Install Cisco Spaces: Connector in your network.
- Configure a network with one or more Cisco Catalyst 9300 and 9400 Series Switches, Release 17.3.3 or later.
- Switches must have **Cisco DNA Advantage** subscription.
- Deploy wired sensors in your network. See Compatibility Matrix for IoT Service (Wired) , on page 3 .

- Ensure that Cisco Spaces is configured with maps either from Cisco Prime Infrastructure or Catalyst Center.
- Configure AAA on aCisco Catalyst 9300 Series Switches or a Cisco Catalyst 9400 Series Switches before adding it to Cisco Spaces by running these commands in:
  - **aaa new-model**
  - **aaa authentication login default local**
  - **aaa authorization exec default local**

  For more information, see **Command Reference, Cisco IOS XE Amsterdam 17.3.x (Catalyst 9300 Switches)**
- Perform NTP synchronization across wireless controllers, Cisco Spaces: Connectors, and switches in the network.
- Enable NETCONF on Cisco Catalyst 9300 or 9400 Series Switches on port 830, along with permission to use NETCONF.

Note Cisco Catalyst 9300 and 9400 Series Switches require a local privilege level 15 user to use NETCONF. Additionally, the user must be a password-protected local user, because public-key authentication is not supported.

Design Prerequisites

Ensure you have the following information handy before proceeding:

Figure 4: Design Prerequisites

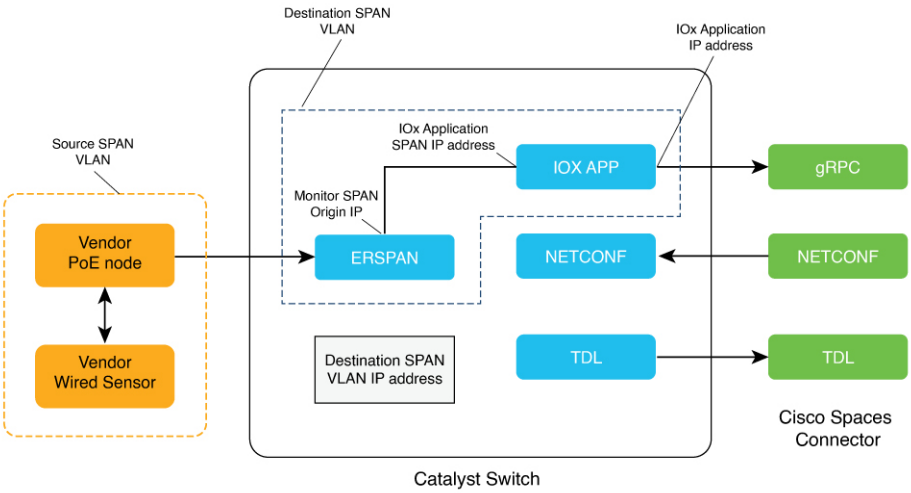

- **Destination SPAN VLAN**: The VLAN used to send Encapsulated Remote Switched Port Analyzer (ERSPAN) traffic from Power over Ethernet (PoE) nodes to Cisco IOx App. You can use an existing VLAN or create a new one. This VLAN can also be local to the switch.

- **Destination SPAN VLAN IP address**: This is the Switched Virtual Interface (SVI) or the IP address of the destination VLAN that can be used to route traffic. If you are using an existing VLAN, you can provide the same IP address. We recommend that you create a new VLAN so that you can keep the ERSPAN traffic local without impacting the existing configuration. Note that this VLAN is used only within the switch for the SPAN traffic.
- **Source SPAN VLAN list:** List of VLANs to which the wired devices are connected. The traffic on these VLANs are monitored. If the wired devices are connected to multiple VLANs, enter the VLANs separated by a comma.
- **Monitor SPAN origin IP address**: This is the source IP address of the monitor session. This can be from the SPAN VLAN. This can also be the same as the destination VLAN IP address.
- **IoX application Span IP Address**
- **Application Cisco Spaces Connector VLAN**: This is the VLAN on which the connector is reachable (for management or data). You can configure the Cisco IOx App's second interface to use this VLAN to send traffic to the connector. This VLAN can be the same as the wired PoE node VLAN. The connector must be permitted to accept communications from the Cisco IOx application.
- **DHCP**: When enabled, DHCP allocates an IP address from the **Application DNA Spaces Connector VLAN** to the Cisco IOx App's second interface.
- **IoX application IP address**: This is the IP address that you must manually configure for the Cisco IOx App's second interface, and is used to communicate with the Connector. This is not required if you select DHCP.
- **IoX application netmask**: This is the IP subnet mask that you must manually configure for the Cisco IOx App's second interface, and is used to communicate with the connector. This is not required if you select DHCP.
- **IoX application gateway address**: This is the IP address that you must manually configure for the Cisco IOx App's second interface, and is used to communicate with the connector. This is not required if you select DHCP.

Figure 5: Sample Configuration

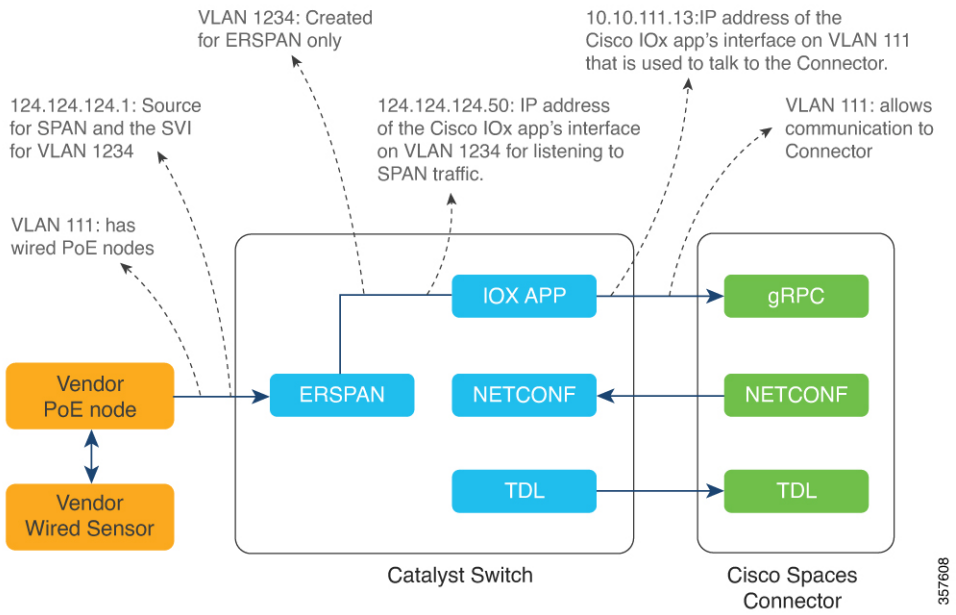

Open Ports for IoT service (wired)

This section lists the connector ports that must be open for the proper functioning of each service or protocol.

Figure 6: Open Ports for IoT Service (Wired) with the IoT Gateway

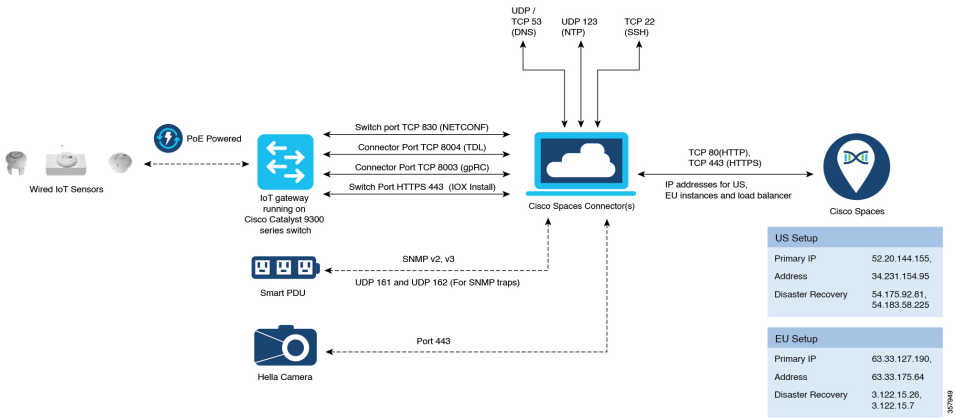

Open Ports for IoT Service (Wired) without the IoT Gateway

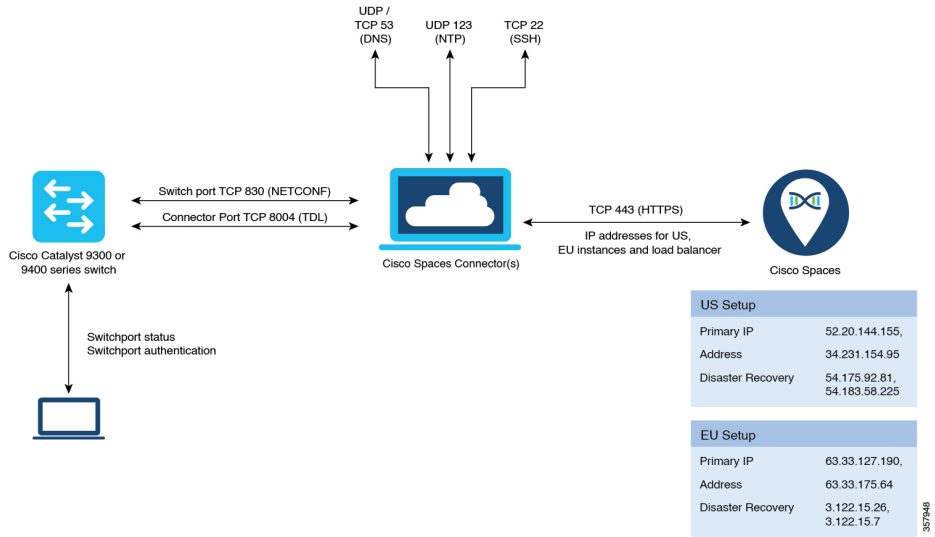

Table 1: Setup Types

	Primary IP Address	**Disaster Recovery**
US Setup Type	52.20.144.155 34.231.154.95	54.176.92.81 54.183.58.225
EU Setup Type	63.33.127.190 63.33.175.64	3.122.15.26 3.122.15.7
Singapore Setup (SG) Type	13.228.159.49 54.179.105.241	13.214.251.223 54.255.57.46

Configure IoT Service (Wired)

Step 1 From the Cisco Spaces dashboard left-navigation pane, click **Setup** and choose **Wired Networks**.

Step 2 From the **Connect your wireless network** window that is displayed, go to the **Step 2** area and click **View Connectors**.

Figure 7: View Connectors

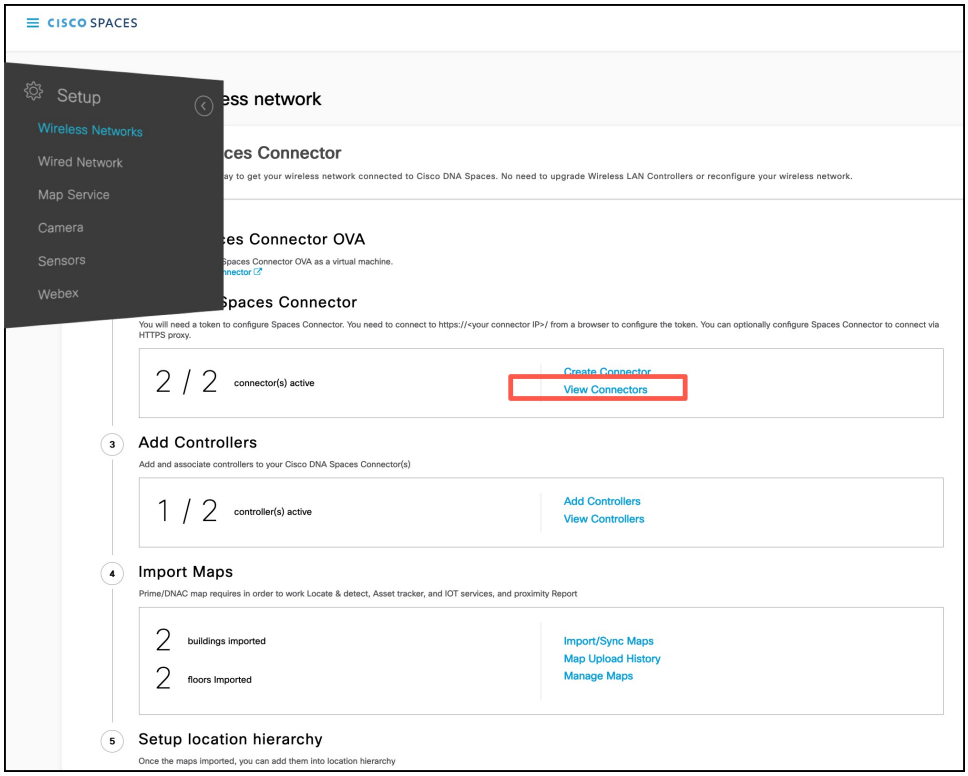

Step 3 Click a connector 3 of your choice.

Note You can use the same connector that you used for Cisco Spaces: IoT Service (Wireless).

Step 4 In the connector details window that is displayed, click **Add Services**.

Figure 8: Add Services

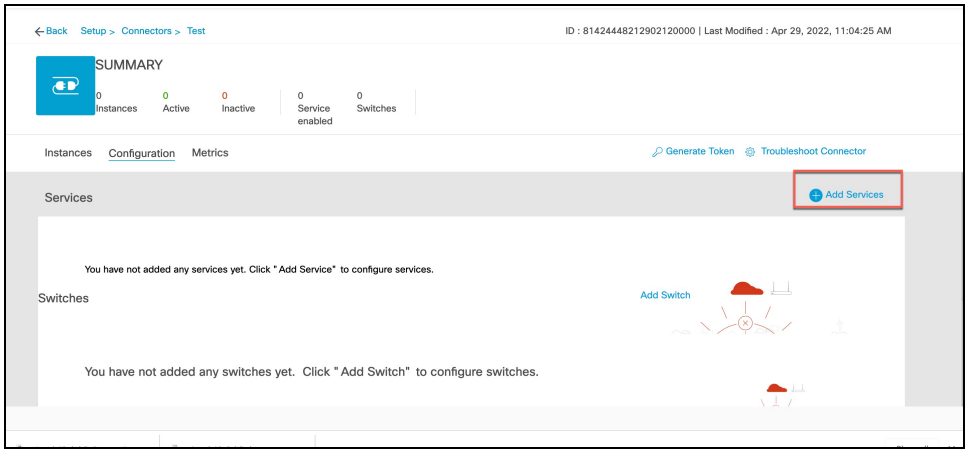

Step 5 In the **Add Service** window that is displayed, choose **IoT Wired** and click **Add**.

Figure 9: Adding a Service

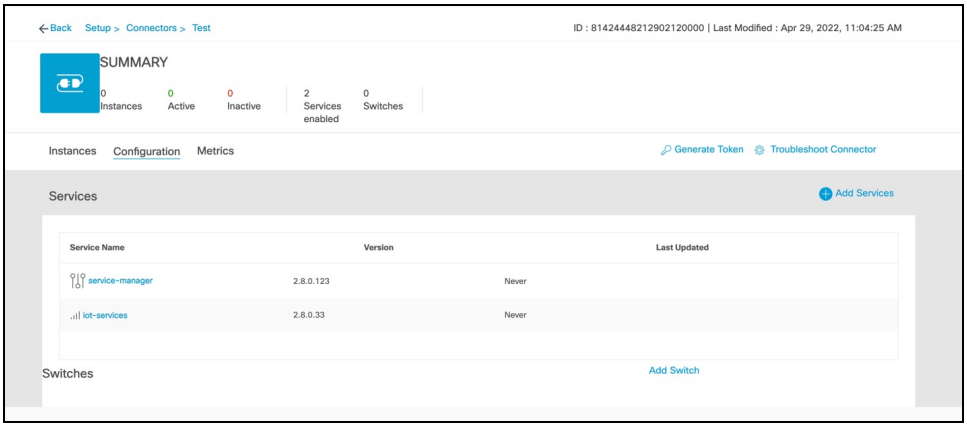

In the **Connector Details** window, you can see that the **IoT Wired** service has been added.

Step 6 Click the gear icon near the **IoT Wired** row.

Figure 10: Gear Icon of IoT Wired

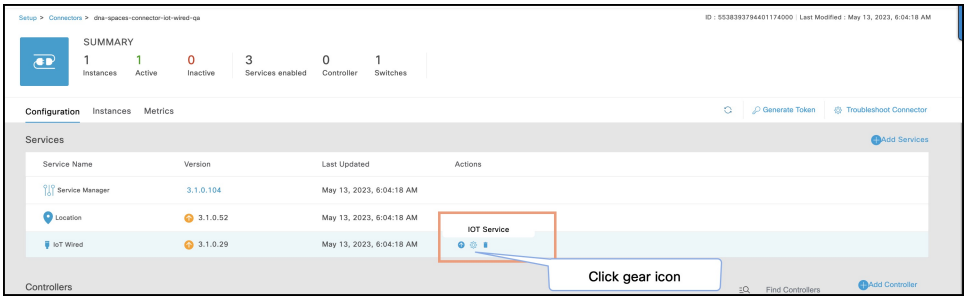

Step 7 (Optional) In the **Manage IoT Streams** window that is displayed, check if the connector is not already enabled, and if it is not, click **Configure to Enable**.

Step 8 From the list of switches, click the vertical three-dot icon adjacent to the switch and select **Enable Service**.

Figure 11: Enable Service

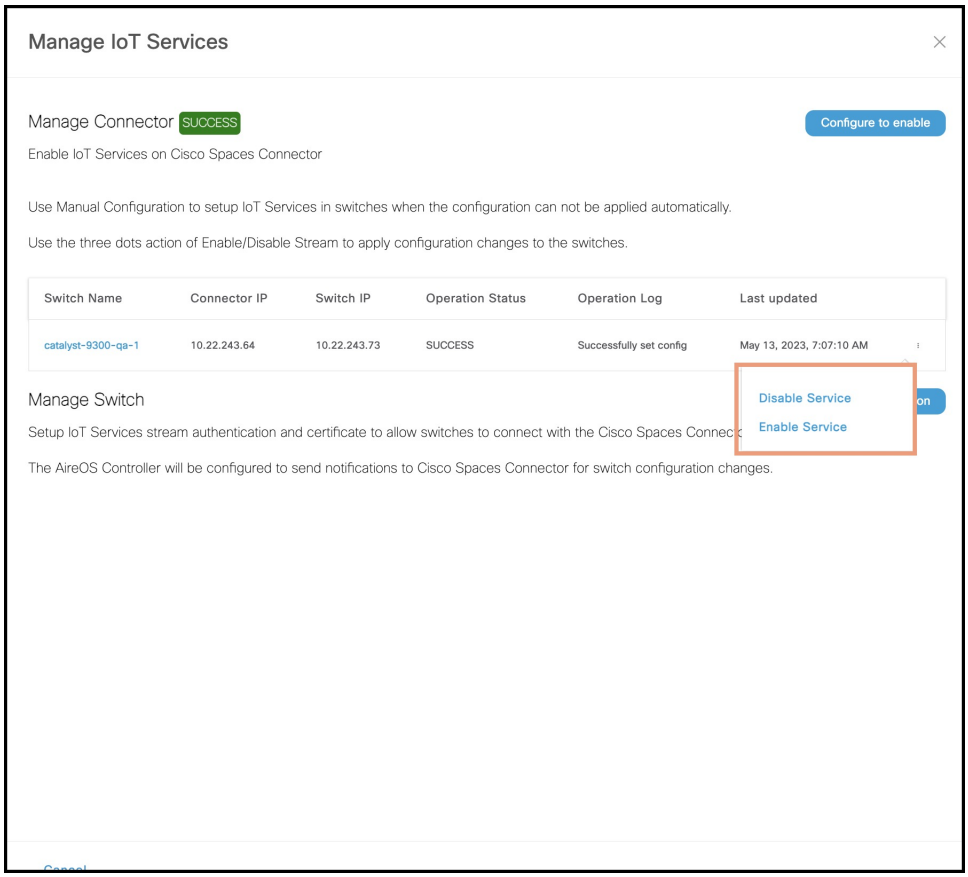

Note If you are using the same connector for both wired and wireless IoT services, the connector is already enabled.

Step 9 Enter the SPAN VLAN and the Cisco IOx App details.

- **Destination SPAN VLAN**: The VLAN used to send Encapsulated Remote Switched Port Analyzer (ERSPAN) traffic from Power over Ethernet (PoE) nodes to Cisco IOx App. You can use an existing VLAN or create a new one. This VLAN can also be local to the switch.
- **Destination SPAN VLAN IP address**: This is the Switched Virtual Interface (SVI) or the IP address of the destination VLAN that can be used to route traffic. If you are using an existing VLAN, you can provide the same IP address. We recommend that you create a new VLAN so that you can keep the ERSPAN traffic local without impacting the existing configuration. Note that this VLAN is used only within the switch for the SPAN traffic.
- **Source SPAN VLAN list:** List of VLANs to which the wired devices are connected. The traffic on these VLANs are monitored. If the wired devices are connected to multiple VLANs, enter the VLANs separated by a comma.
- **Monitor SPAN origin IP address**: This is the source IP address of the monitor session. This can be from the SPAN VLAN. This can also be the same as the destination VLAN IP address.
- **IoX application Span IP Address**
- **Application Cisco Spaces Connector VLAN**: This is the VLAN on which the connector is reachable (for management or data). You can configure the Cisco IOx App's second interface to use this VLAN to send traffic

to the connector. This VLAN can be the same as the wired PoE node VLAN. The connector must be permitted to accept communications from the Cisco IOx application.

- **DHCP**: When enabled, DHCP allocates an IP address from the **Application DNA Spaces Connector VLAN** to the Cisco IOx App's second interface.
- **IoX application IP address**: This is the IP address that you must manually configure for the Cisco IOx App's second interface, and is used to communicate with the Connector. This is not required if you select DHCP.
- **IoX application netmask**: This is the IP subnet mask that you must manually configure for the Cisco IOx App's second interface, and is used to communicate with the connector. This is not required if you select DHCP.
- **IoX application gateway address**: This is the IP address that you must manually configure for the Cisco IOx App's second interface, and is used to communicate with the connector. This is not required if you select DHCP.

Figure 12: Configure Switch

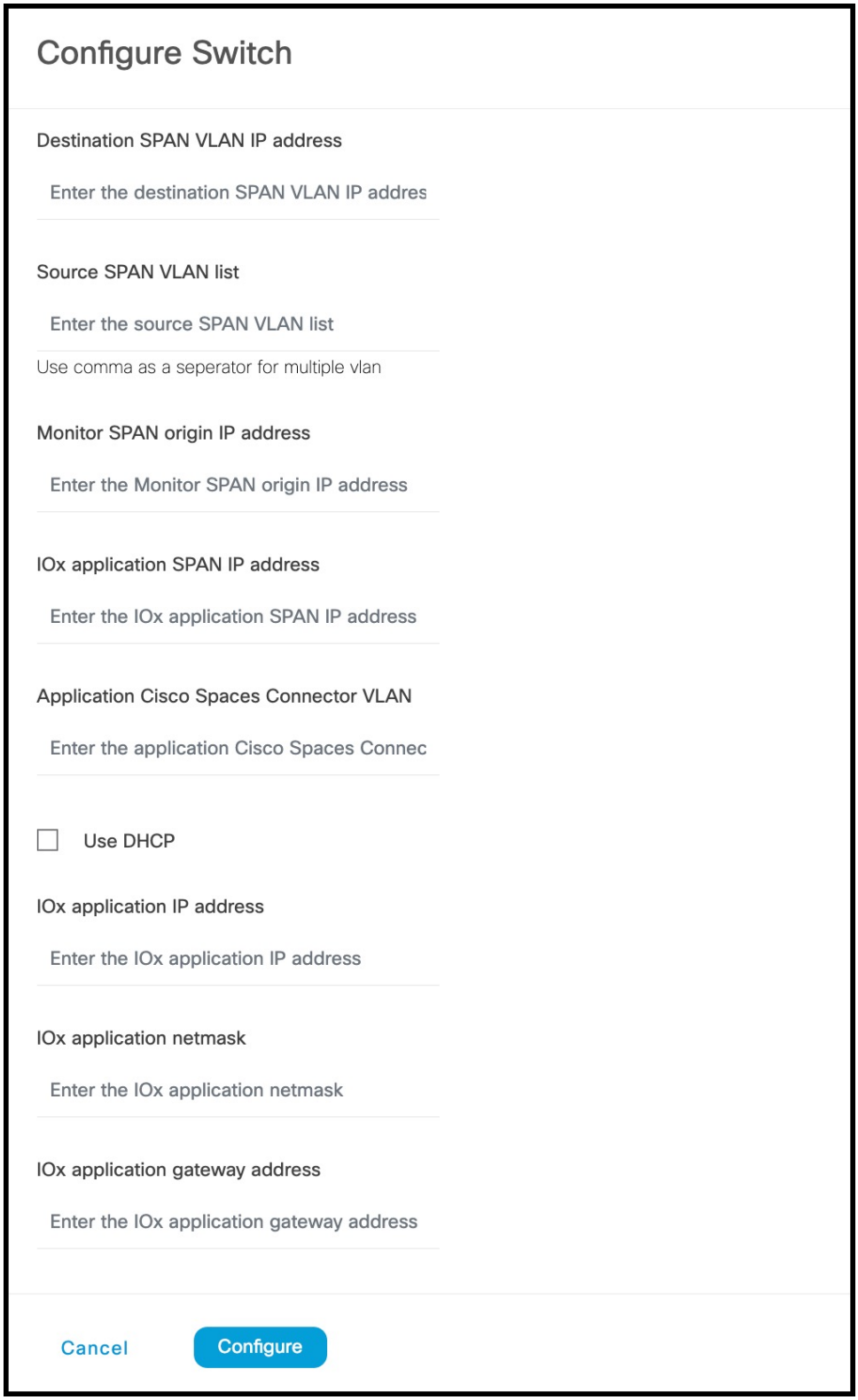

Figure 13: Configure Switch

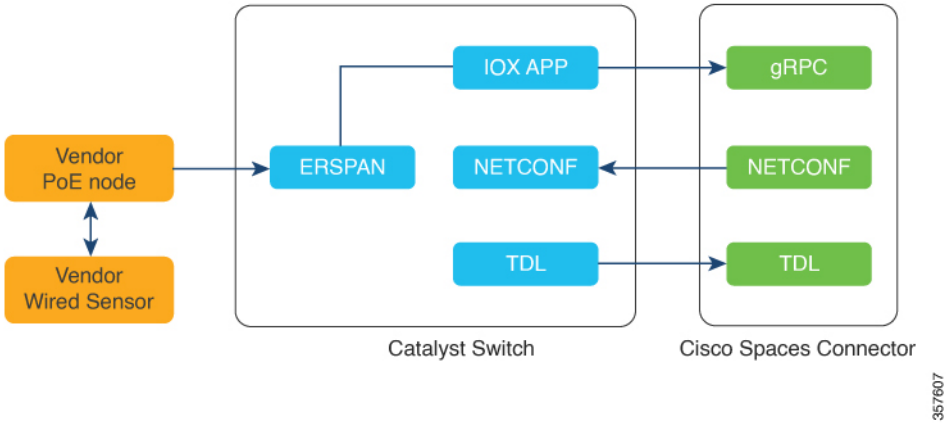

Figure 14: Sample Configuration

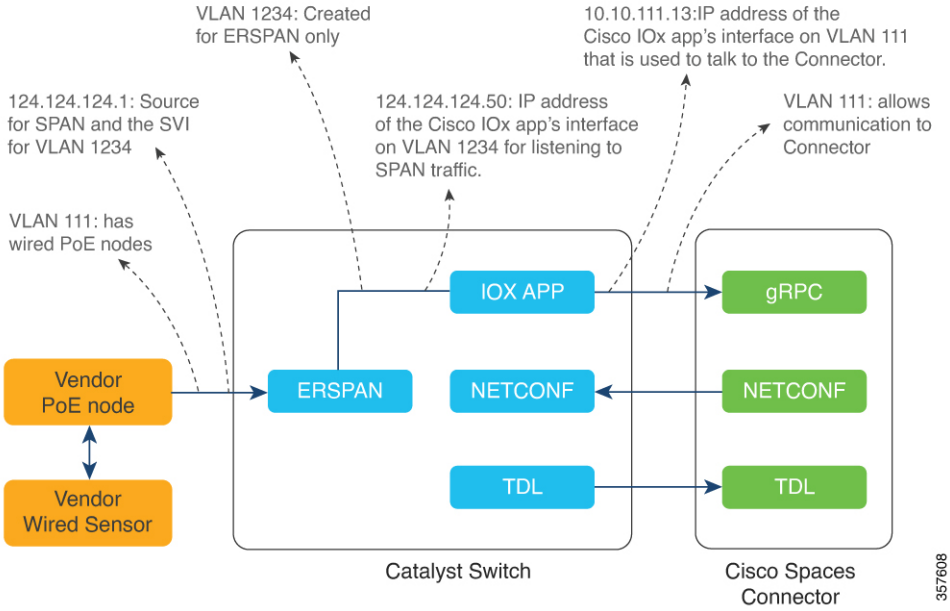

Step 10 Click **Configure**.

The configurations are deployed on the switch. The following diagram shows the corresponding CLI commands you can use in place of the GUI configuration.

Figure 15: GUI-Command Line Mapping

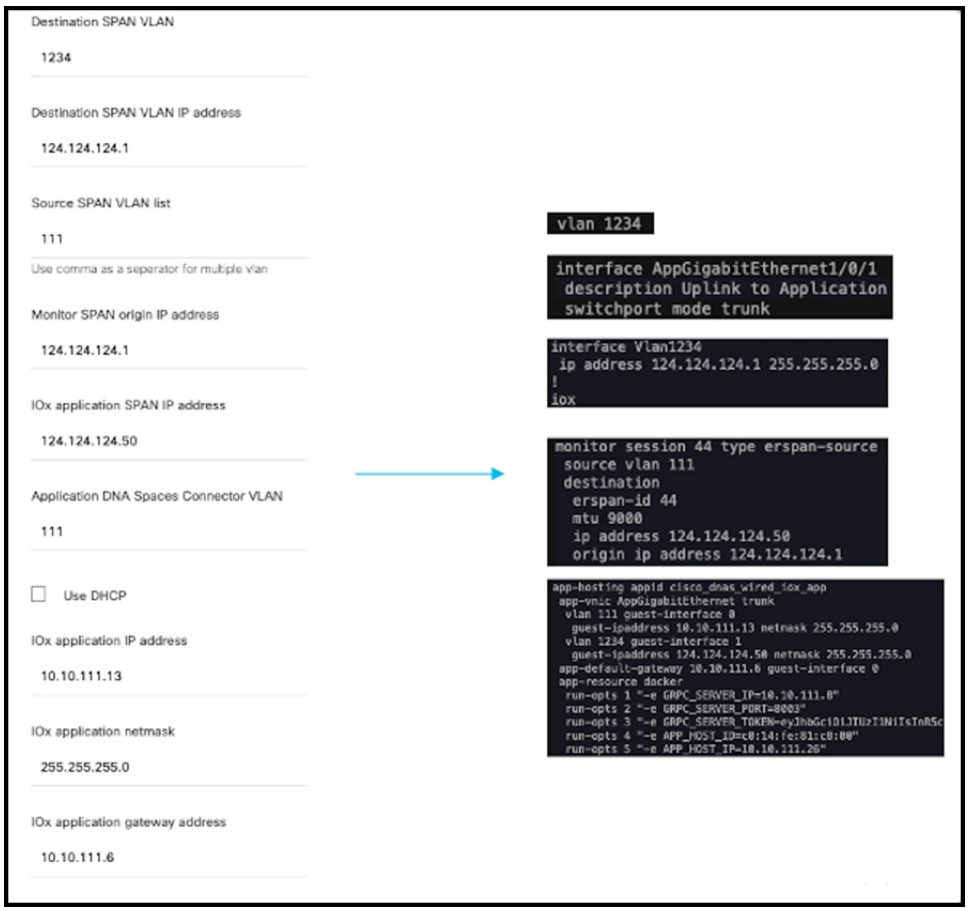

Step 11 In the **Manage IoT Services** window that you are taken to, you can click on a name of the switch to see the list of steps executed on that switch.

Figure 16: Manage IoT Services

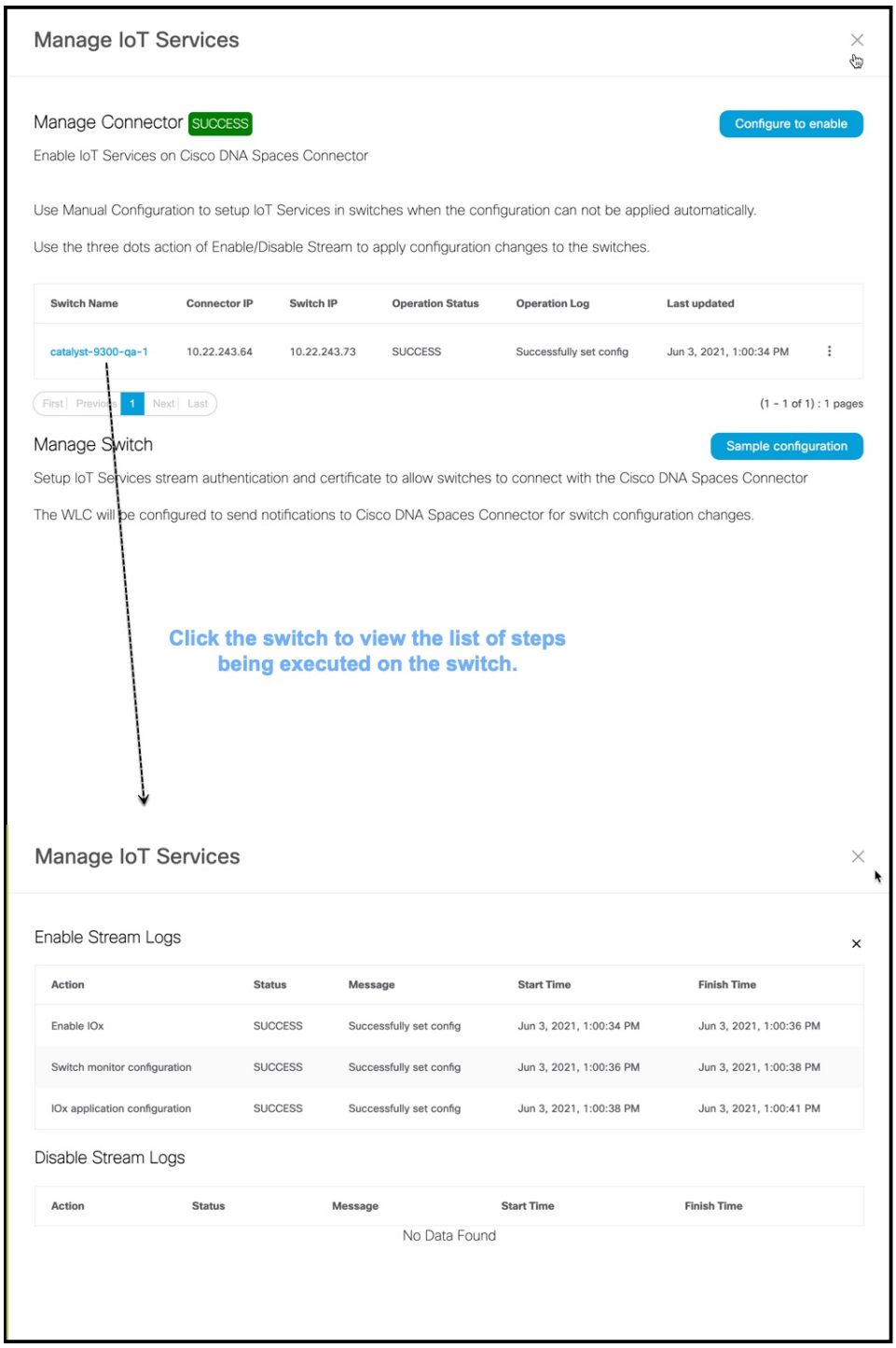

Verify if Cisco Catalyst 9300 and 9400 Series Switches are Added to the Connector

This procedure helps you verify if a Cisco Catalyst 9300 or 9400 Series Switches are deployed and active. This is a necessary prerequisite for proper functioning of Cisco Spaces: IoT Service (Wired).

Step 1 In the Cisco Spaces dashboard left navigation pane, choose **Setup** > **Wired Network**.

Step 2 In the **Add Switch** area, click **View Switches**.

Figure 17: View Switches

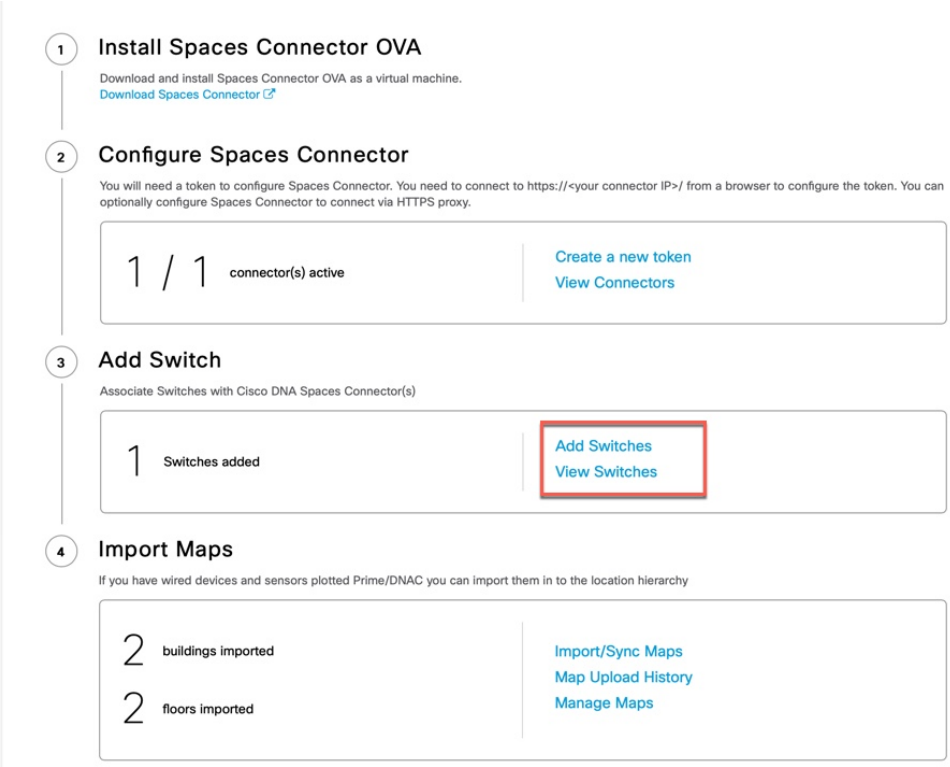

Step 3 Ensure that a switch is listed here, and is connected to a Cisco Spaces: Connector.

Figure 18: View Switches