Cisco IW3702 Access Point Getting Started Guide

Revised: February 23, 2024

Cisco IW3702 Access Point Getting Started Guide

This guide documents the hardware features of the Cisco IW3702 access point. It describes the physical and performance characteristics of each access point, and explains how to install and configure an access point.

This publication is for the network technicians who install and configure access points. You must be familiar with network structures, terms, and concepts.

The Cisco IW3702 access point is referred to as *access point* in this document.

Organization

This guide includes the following sections:

Section	Description
Conventions, on page 2	Describes text conventions used in this document.
Overview, on page 3	Describes the major components and features of the access point.
Installation, on page 13	Provides warnings, safety information, and installation information you need to install your access point.
Antennas and RF Accessories, on page 23	Provides information about the antennas used by the access point and the antenna configurations deployed.
Configuration, on page 41	Describes the steps to configure the access point.
Technical Specifications, on page 65	Lists technical specifications for the access point.
Ports and Connectors, on page 75	Describes the port and connector pinouts for the access point.

Conventions

This document uses the following conventions.

Convention	Indication
bold font	Commands and keywords and user-entered text appear in **bold** font.
italic font	Document titles, new or emphasized terms, and arguments for which you supply values are in *italic* font.
[ ]	Elements in square brackets are optional.
{x | y | z }	Required alternative keywords are grouped in braces and separated by vertical bars.
[x | y | z]	Optional alternative keywords are grouped in brackets and separated by vertical bars.
string	A nonquoted set of characters. Do not use quotation marks around the string or the string will include the quotation marks.

Convention	Indication
courier font	Terminal sessions and information the system displays appear in courier font.
< >	Nonprinting characters such as passwords are in angle brackets.
[ ]	Default responses to system prompts are in square brackets.
!, #	An exclamation point (!) or a pound sign (#) at the beginning of a line of code indicates a comment line.

Note Means *reader take note* . Notes contain helpful suggestions or references to material not covered in the manual.

Caution **Means** *reader be careful.* **In this situation, you might perform an action that could result in equipment damage or loss of data.**

Danger **IMPORTANT SAFETY INSTRUCTIONSMeans danger. You are in a situation that could cause bodily injury. Before you work on any equipment, be aware of the hazards involved with electrical circuitry and be familiar with standard practices for preventing accidents. Use the statement number provided at the end of each warning to locate its translation in the translated safety warnings that accompanied this device.SAVE THESE INSTRUCTIONS**

Overview

This document describes the Cisco IW3702 access point. The access point is an IEEE 802.11a/b/g/n/ac compliant, dual-band WiFi access point with external antennas.

The access point is IP67 rated, ruggedized, and certified for on-board rail and outdoor use-cases such as train and trackside, mining, intelligent transportation systems, and smart city applications. You can mount the access point on a DIN rail in an industrial enclosure. Its components are designed to withstand extremes in temperature, vibration, and shock common in industrial environments.

The access point features:

- IEEE 802.11a/b/g/n compliant operation
- IEEE 802.11ac Wave 1 support
- Dual-radio design for 2.4 GHz and/or 5 GHz bands
- 4x4 multiple-input multiple-output (MIMO) technology with three spatial streams
- Cisco CleanAir support for 20, 40, and 80 MHz channels
- DC input port (M12 connector)
- 2 Power over Ethernet (PoE) ports with M12 X-code connectors:
  - 1 x PoE-IN Gigabit Ethernet port compliant with IEEE 802.3at POE+ PD
  - 1 x PoE-OUT Gigabit Ethernet port compliant with IEEE 802.3af POE PSE

- RS232 console port with cover (RJ-45 connector)
- 4 antenna ports (N connector-female)
- Rugged IP67 rated housing and -40 to 167°F (-40 to 75°C) operating temperature range (ambient—without solar loading or wind cooling)
- Compact size for space constrained environments

Access Point Models

There are two access point models, based on antenna configuration. The following table lists the available IW3702 models.

Table 1: Access Point Models

Model	Description
Cisco IW3700 Series Access Points with Regulatory Domain Code[1]	
IW3702-2E-x-K9	Access point with four antenna connectors: 2 on the top and 2 on the bottom.
IW3702-4E-x-K9	Access point with four antenna connectors on top side.
Cisco IW3700 Series Universal Access Points	
IW3702-2E-UXK9	Access point with four antenna connectors: 2 on the top and 2 on the bottom.
IW3702-4E-UXK9	Access point with four antenna connectors on top side.

[1] Regulatory Domains: (x=regulatory domains)Domain codes available for the IW3700 Series are x=A, B, D, E, F, M, R, Q, S, and Z. Other regulatory domains are supported by the universal access points. Customers are responsible for verifying approval for use in their individual countries. To verify approval and to identify the regulatory domain that corresponds to a particular country, visit https://www.cisco.com/go/aironet/compliance.

Note Cisco IW3700 Series Access Points with regulatory domain mapping for the country code Egypt "EG" with 2.4G: "-E" and 5G: "-I" is supported from Cisco AireOS Release 8.5 and Cisco IOS-XE Release 17.3.

Bottom and Top Panel Views

Figure 1: Cisco IW3702-2E-UXK9/IW3702-2E-x-K9 Bottom Panel View

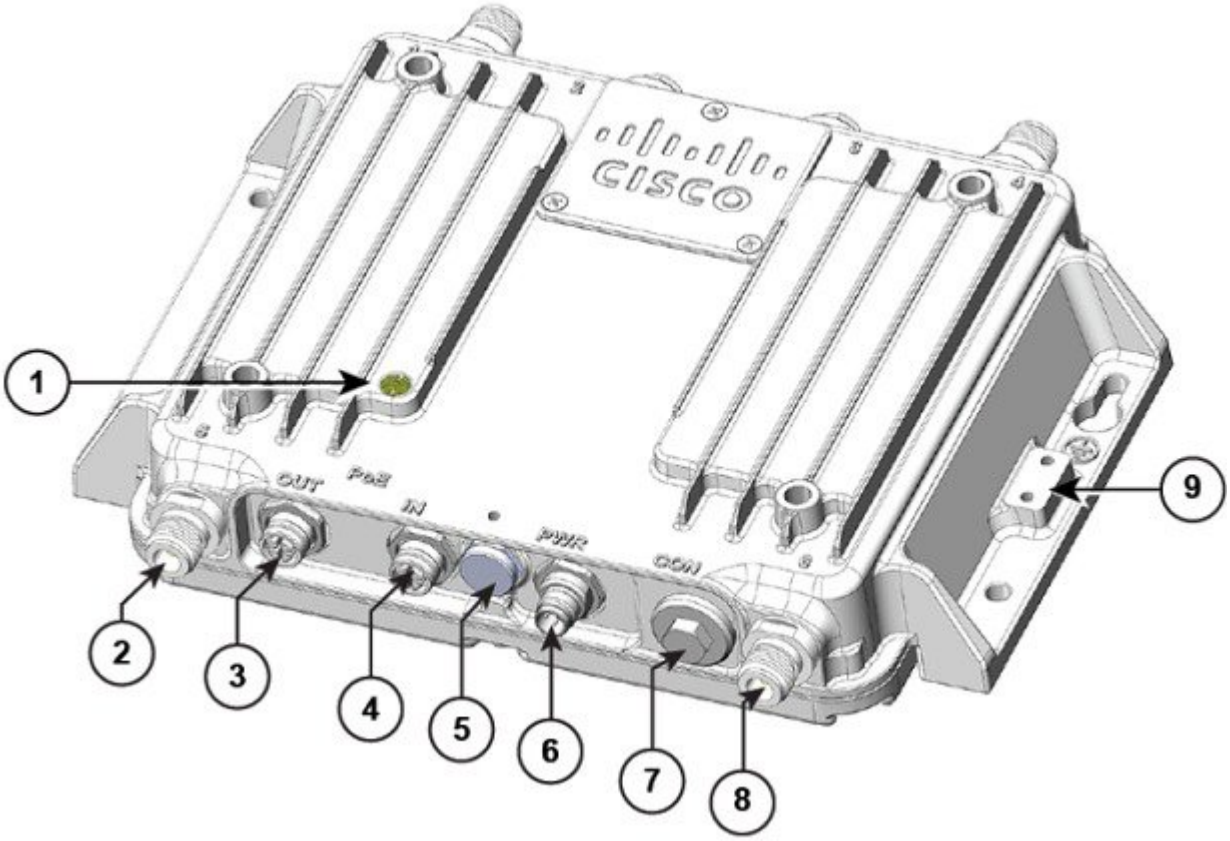

1	Status LED	6	Power (PWR) connector
2	Antenna port B	7	Console (CON) port
3	PoE OUT port	8	Antenna port A
4	PoE IN port	9	Ground connection
5	Protective vent port / Reset button (covered)		

Note There are four antenna ports on the Cisco IW3702-2E-UXK9/IW3702-2E-x-K9 model: two on the top and two on the bottom.

Figure 2: Cisco IW3702-2E-UXK9/IW3702-2E-x-K9 Top Panel View

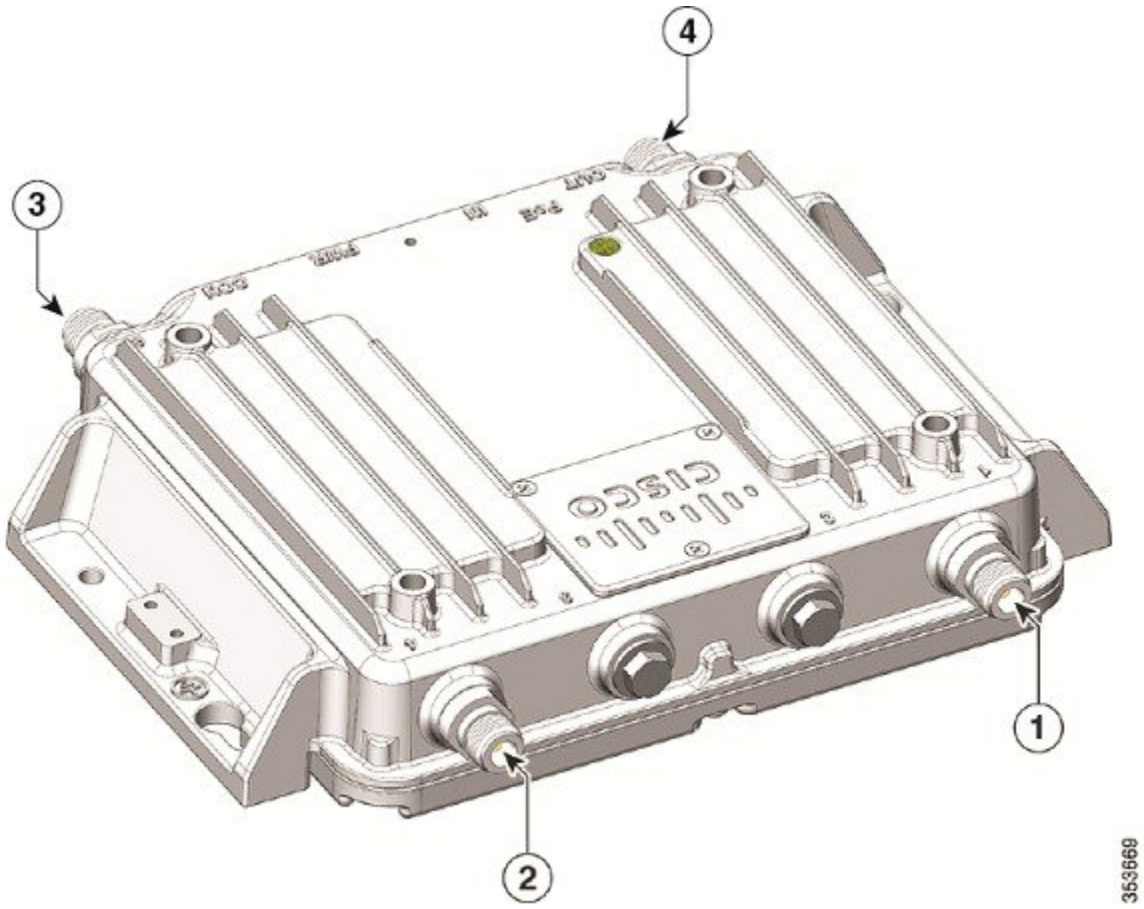

1	Antenna port C	3	Antenna port A
2	Antenna port D	4	Antenna port B

Note There are four antenna ports on the Cisco IW3702-4E-UXK9/IW3702-4E-x-K9 model: all four connectors are on the top side.

Figure 3: Cisco IW3702-4E-UXK9/IW3702-4E-x-K9 Bottom Panel View

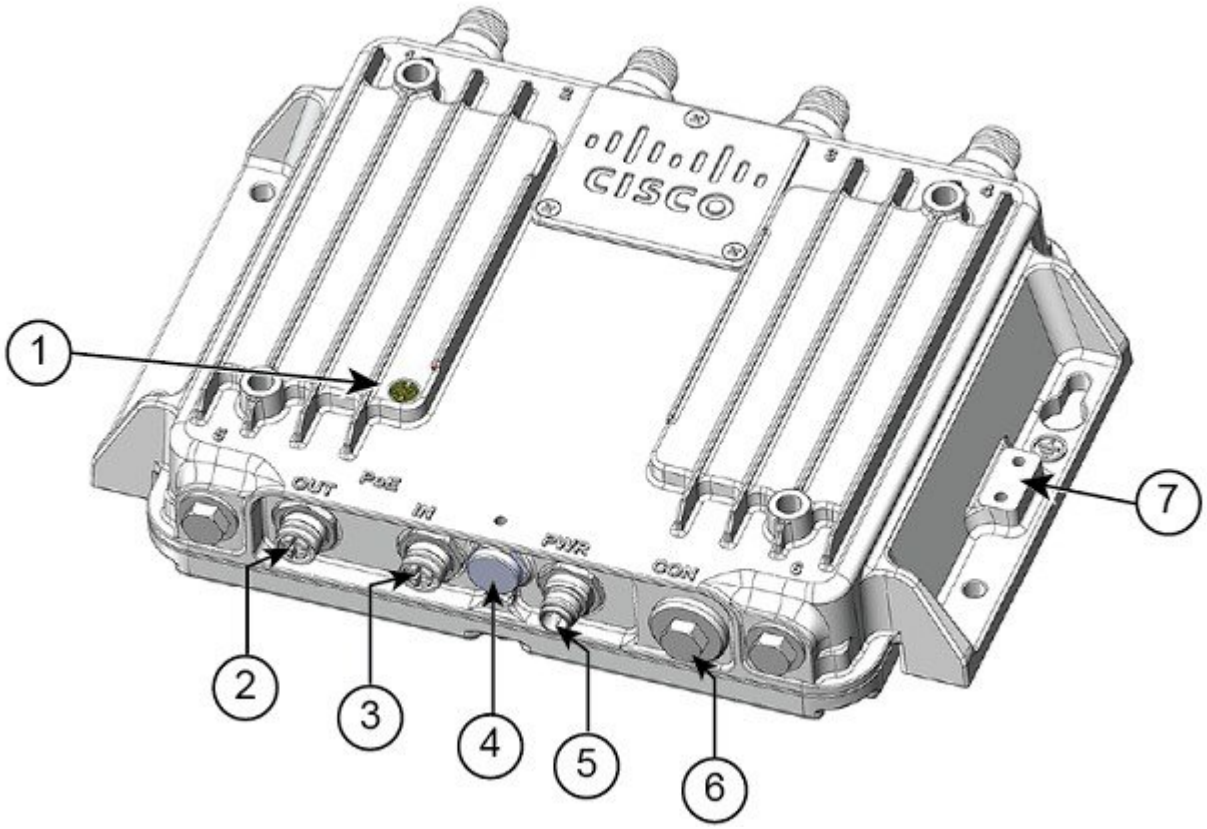

1	Status LED	5	Power (PWR) connector
2	PoE OUT port	6	Console (CON) port
3	PoE IN port	7	Ground connection
4	Protective vent port / Reset button (covered)		

Figure 4: Cisco IW3702-4E-UXK9/IW3702-4E-x-K9 Top Panel View

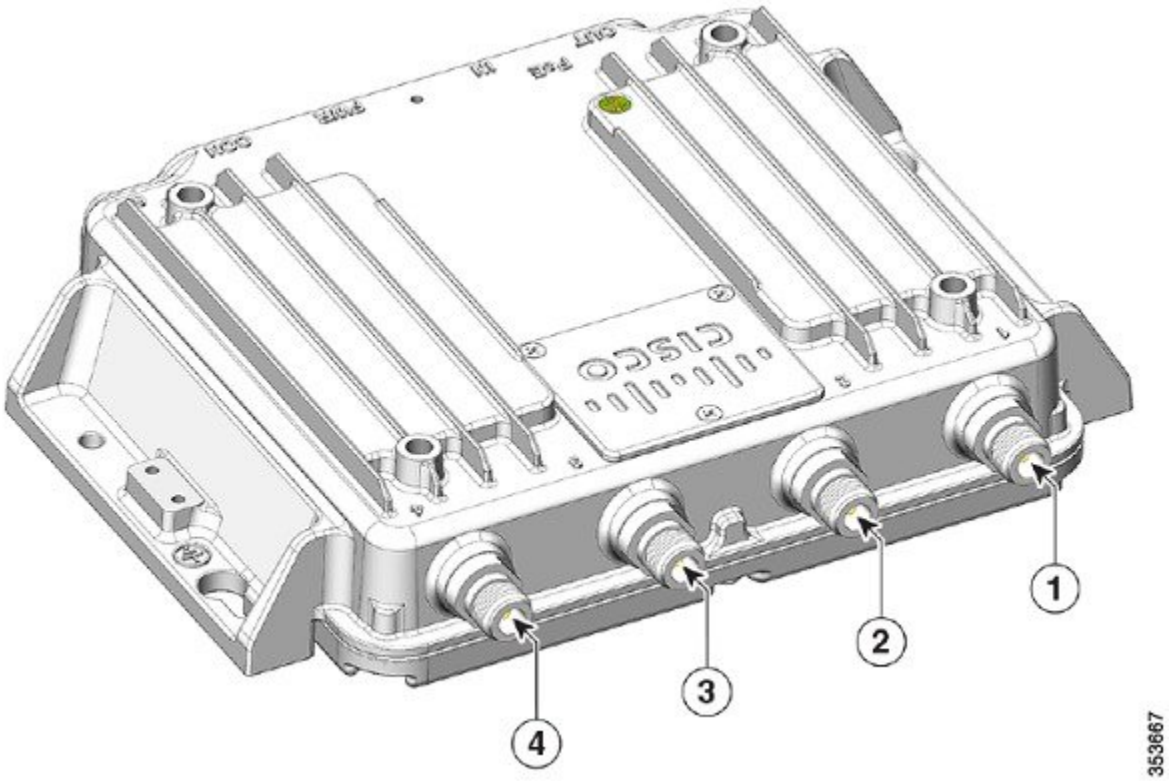

1	Antenna port C	3	Antenna port B
2	Antenna port A	4	Antenna port D

Bottom Panel Components

This section describes the bottom panel components.

Status LED

The Status LEDs provide information on access point status, activity, and performance. The following table describes status LED states.

Table 2: Status LED

Message Type	LED Color	System State
Boot loader status	Blinking pink	DRAM memory test in progress.
		DRAM memory test OK.
		Board initialization in progress.
		Initializing flash file system.
		Flash memory test OK.
		Initializing Ethernet.
		Ethernet OK.
		Starting Cisco IOS.
		Initialization successful.
Client association status	Green	Normal operating condition but no wireless client association.
	Blue	Normal operating condition with at least one wireless client association.
Operational status	Blinking blue	Software upgrade in progress.
	Cycling green-red-off	Discovery/join process in progress.
	Rapidly cycling blue-green-red	Access point location command invoked.
	Blinking red	Ethernet link not operational.
Boot loader warnings	Blinking blue	Configuration recovery in progress (RESET button pushed for 30 seconds).
	Red	Ethernet failure or image recovery (RESET button pushed for 50 seconds).
	Blinking pink	Image recovery in progress (MODE button released).
Boot loader errors	Red	DRAM memory test failure.
	Blinking red-blue	FLASH file system failure.
	Blinking red-off	Environment variable failure.
		Bad MAC address.
		Ethernet failure during image recovery.
		Boot environment failure.
		No Cisco image file.
		Boot failure.

Message Type	LED Color	System State
Cisco IOS errors	Red	Software failure. Disconnect and reconnect unit power.
	Cycling blue-green-red-off	General warning. Insufficient inline power.
AP status when provisioned by Cisco AirProvision	Cycling red-green-off	AP waiting to be primed.
	Blinking white	AP priming via Cisco NDP in progress.
	Blinking teal (for 15 seconds)	AP upon successful connection to Cisco AirProvision.
	Blinking blue	AP priming via Cisco AirProvision in progress.
	Chirping red	AP primed to wrong regulatory domain.

PWR Connectors

There are two options for powering the access point:

- DC input over the PWR connector.
- PoE inline power over the PoE IN port.

Note When powering the access point:

1. Power can be supplied via DC input (PWR connector) or PoE inline (PoE IN port), but not both.
2. We recommend that you not use two power options concurrently, but no harm results if both are present.
3. If using both power inputs, DC input (PWR connector) power takes precedence and PoE inline power is not used.
4. Power supply redundancy is not supported.

The access point requires a DC power supply. To power the access point with a DC power supply, you connect the DC power to the PWR connector on the bottom panel. The DC input voltage range is +12 to +48 VDC (-20%, +25%).

The PWR connector is an M12 A-code, 4-pin (male) connector. See Power Port, on page 75 and DC Input and PoE IN Specifications, on page 67.

PoE OUT Port

Note The PoE OUT port is only supported when the access point is powered over the PWR port. When powered over the PoE IN port, PoE OUT functionality is not supported.

The PoE OUT port is a 10/100/1000 BASE-T port with an M12 X-code connector. The PoE OUT port supplies PoE inline DC power to power external devices. The PoE OUT port pin-out conforms to Alternative A-MDIX mode.

Note PoE inline power supports IEEE 802.3af compliant devices and delivers up to 15.4 W of PoE.

For more information about the PoE OUT, PoE IN, and DC input, see DC Input and PoE IN Specifications, on page 67.

PoE IN Port

The PoE IN port is a 10/100/1000 BASE-T port with an M12 X-code connector. The port has auto-sensing and auto-MDIX capabilities.

Note The PoE IN port is an alternate power input to DC input over the PWR port.

- Power the access point over the PWR port to enable the PoE OUT port.
- When powered over the PoE IN port, PoE OUT functionality is not supported.

For more information, see DC Input and PoE IN Specifications, on page 67.

Protective Vent Port

The protective vent port relieves pressure inside the access point chassis possibly caused by changing temperatures in the installation environment. The vent prevents pressure from building up and damaging enclosure seals and potentially exposing sensitive components to water. The vent also protects the access point interior from dust, dirt, water, and other environmental elements.

Note If the vent is removed or damaged, the access point is subject to moisture damage.

Reset Button

You use the reset button for configuration or image recovery. The reset button is under the protective vent port. To access the reset button:

1. Use a 5/8" socket to remove the protective vent.
2. Disconnect power (the power jack for external power or the Ethernet cable for in-line power) from the access point.
3. Press and hold the RESET button while you reconnect power to the access point.
4. Press the reset button.
   - Hold the RESET button until the Status LED turns blinking blue (usually, pushed for 30 seconds) to reset the access point to its factory settings.
   - Hold the RESET button until the Status LED turns solid Red (usually, pushed for 50 seconds) to do image recovery.
5. Replace the protective vent using 5/8" socket.
6. Torque the protective vent to 5-7 inch-lbs.

Console Port

You can connect the access point to a PC or laptop through the RJ45 CON port. The RJ45 CON port uses the Cisco console port RJ45-to-DB9 cable (Cisco PN 72-3383-01).

A cable port seal covers the CON port. This liquid-tight plug protects the access point from environmental elements. Ensure that the plug is installed during normal operation or when unit is unattended. You can remove and install the port plug with a 1/2" (13 mm) socket. Torque it to 6-7 ft-lbs

For more information, see Console Port, on page 77.

Ground Stud

The ground stud is the access point ground. You use screws to attach the wired grounding lug to the ground stud. Connect the other end of the ground wire to an earth ground such as a grounding rod or appropriate ground point on a grounded pole.

Top Panel Components

This section describes the top panel components.

Antenna Port

The antenna connector is a type N female coaxial connector.

Hard Points

The hard points are alternate mounting or attachment points for additional equipment such as directional antennas or covers.

Note Do not attach third-party radios using these hard points.

Figure 5: Cisco IW3702 Series Access Point Hard Points

1	Hard points 1/4-20UNC-2B, .45" deep

Management Options

You can manage the access point using the following options:

- Web browser Interface—Contains management pages to change the wireless device settings, upgrade firmware, and monitor and configure other wireless devices on the network.
- Cisco IOS command-line interface (CLI)—Configures the access point. You can access the CLI by directly connecting a PC to the console port, or you can access the CLI using a Telnet session from a remote management station.

Installation

You can install the access point on a wall, ceiling or pole, in a cabinet or rack, under a seat, or in a plenum airspace. You can direct mount, DIN rail mount, or attach the access point on a pole mounting bracket.

Perform the installation procedures in this order:

1. Preparing for Installation, on page 14
2. Unpacking the Components, on page 17

3. Mounting the Access Point, on page 19
4. Connecting the Protective Ground and Power, on page 19
5. Connecting the Antennas, on page 22
6. Connecting to Access Point Ports, on page 22

Preparing for Installation

The following topics prepare you for installing the unit:

Warnings

These warnings are translated into several languages in the Regulatory Compliance and Safety Information for the Cisco IW3702 Access Point on Cisco.com.

Danger **Only trained and qualified personnel should be allowed to install, replace, or service this equipment.** Statement 1030

Danger **In order to comply with FCC radio frequency (RF) exposure limits, antennas for this product should be located a minimum of 7.9 in. (20 cm) or more from the body of all persons.** Statement 332

Danger **Read the installation instructions before you connect the system to its power source.** Statement 1004

Danger **This unit is intended for installation in restricted access areas. A restricted access area can be accessed only through the use of a special tool, lock and key, or other means of security.** Statement 1017

Danger **This equipment must be grounded. Never defeat the ground conductor or operate the equipment in the absence of a suitably installed ground conductor. Contact the appropriate electrical inspection authority or an electrician if you are uncertain that suitable grounding is available.** Statement 1024

Danger **Ultimate disposal of this product should be handled according to all national laws and regulations.** Statement 1040

Danger **To prevent the system from overheating, do not operate it in an area that exceeds the maximum recommended ambient temperature of: 70°C** Statement 1047

Danger **Installation of the equipment must comply with local and national electrical codes.** Statement 1074

Danger **This product relies on the building's installation for short-circuit (overcurrent) protection. Ensure that the protective device is rated not greater than: 15 A.** Statement 1005

Danger **Do not operate your wireless network device near unshielded blasting caps or in an explosive environment unless the device has been modified to be especially qualified for such use.** Statement 245B

Caution The fasteners you use to mount an access point on a ceiling must be capable of maintaining a minimum pullout force of 20 lbs (9 kg) and must use all 4 indented holes on the mounting bracket.

Note The access point is suitable for use in environmental air space in accordance with section 300.22.C of the National Electrical Code and sections 2-128, 12-010(3), and 12-100 of the Canadian Electrical Code, Part 1, C22.1. You should not install the power supply or power injector in air handling spaces.

Note Use only with listed ITE equipment.

EMC Environmental Conditions for Products Installed in the European Union

This section applies to products installed in the European Union. The equipment is intended to operate under the following environmental conditions with respect to EMC:

- A separate defined location under the user's control.
- Earthing and bonding meets the requirements of ETSI EN 300 253 or ITU-T K.27.
- AC-power distribution shall be one of the following types, where applicable: TN-S and TN-C as defined in IEC 60364-3.

In addition, if equipment is operated in a domestic environment, interference could occur.

National Restrictions within the European Union

Within the European Union as well as within the majority of the other European Countries, the 2.4 and 5 GHz bands are available for use by wireless LANs.

The following table provides an overview of the regulatory requirements that are generally applicable for 2.4 and 5 GHz bands.

The requirements for any country might evolve. We recommend that you check with your local authorities for the current status of regulations for 2.4 and 5 GHz wireless LANs within your country.

Table 3: Overview of Regulatory Requirements for Wireless LANs

Frequency Band (MHz)	Maximum Power Level Effective Isotropic Radiated Power (EIRP) mW	Indoor only	Indoor and Outdoor
2400-2483.5	100	—	x
5150-5350	200	x	—
5470-5725	1000	—	x

Tools and Hardware Required

These tools and hardware are required for access point installation:

- Crimping tool (such as Thomas & Bett part number WT2000, ERG-2001, or equivalent)
- 6-gauge copper ground wire
- Wire-stripping tools for stripping 6-gauge wire
- Number 2 Phillips screwdriver
- 1/2" (13 mm) socket for port plug
- 5/8" (16 mm) socket for protective vent
- 5/32" (4 mm) hex key for mounting screws
- Torque wrench (both inch-lbs and ft-lbs)

Installation Guidelines

Because the access point is a radio device, it is susceptible to common causes of interference that can reduce throughput and range. Follow these guidelines to ensure the best possible performance:

- For information on planning and initially configuring your Cisco Mesh network, refer to the Cisco Wireless Mesh Access Points, Design and Deployment Guide.
- Review the FCC Guidelines for Installation and Operation of Outdoor Wireless LAN Devices (U-NII devices) Operating in the 5470-5725 MHz Band Data Sheet at: http://www.cisco.com/c/en/us/products/collateral/routers/3200-series-rugged-integrated-services-routers-isr/data_sheet_c78-647116.html

The above document provides guidelines to mitigate interference to Federal Aviation Administration (FAA) Terminal Doppler Weather Radar (TDWR) as well as details on registering your access point with the Wireless Internet Service Providers Association (WISPA).

- Perform a site survey before beginning the installation.
- Install the access point in an area where structures, trees, or hills do not obstruct radio signals to and from the devices.
- For information on priming a Cisco universal access point, see the Cisco Aironet Universal AP Priming and Cisco AirProvision User Guide at: http://www.cisco.com/c/en/us/td/docs/wireless/access_point/ux-ap/guide/uxap-mobapp-g.html

Site Surveys

Every network application is a unique installation. Before installing an access point, perform a site survey to determine the optimum use of networking components and maximize range, coverage, and network performance.

Consider the following operating and environmental conditions when performing a site survey:

- Data rates—Sensitivity and range are inversely proportional to data bit rates. The maximum radio range is achieved at the lowest workable data rate. A decrease in receiver sensitivity occurs as the radio data increases.
- Antenna type and placement—Proper antenna configuration is a critical factor in maximizing radio range. As a general rule, range increases in proportion to antenna height. However, do not place the antenna higher than necessary, because extra height increases potential interference from other unlicensed radio systems and decreases the wireless coverage from the ground.
- Physical environment—Clear or open areas provide better radio range than closed or filled areas.
- Obstructions—Physical obstructions such as buildings, trees, or hills can hinder performance of wireless devices. Avoid locating the devices in a location where an obstruction exists between the sending and receiving antennas.

Unpacking the Components

The typical access point package contains the following items:

- Access point
- Cisco product documentation and translated safety warnings
- Ground lug (Panduit PLCD6-10A-L), screws, and oxide inhibitor (contained in a tube)
- Console cable
- CoaxSeal—Coaxial cable/connector seal tape for N connectors
- Two M12 Ethernet connector caps (installed on the PoE OUT and PoE IN ports)
- One M12 power connector cap (installed on the PWR port)

Note The M12 connector caps are installed on the ports for protection when the AP is shipped. Remove the caps before using the ports. See the following figure for the locations of each port with M12 cap.

Figure 6: PoE and PWR Connectors With Caps

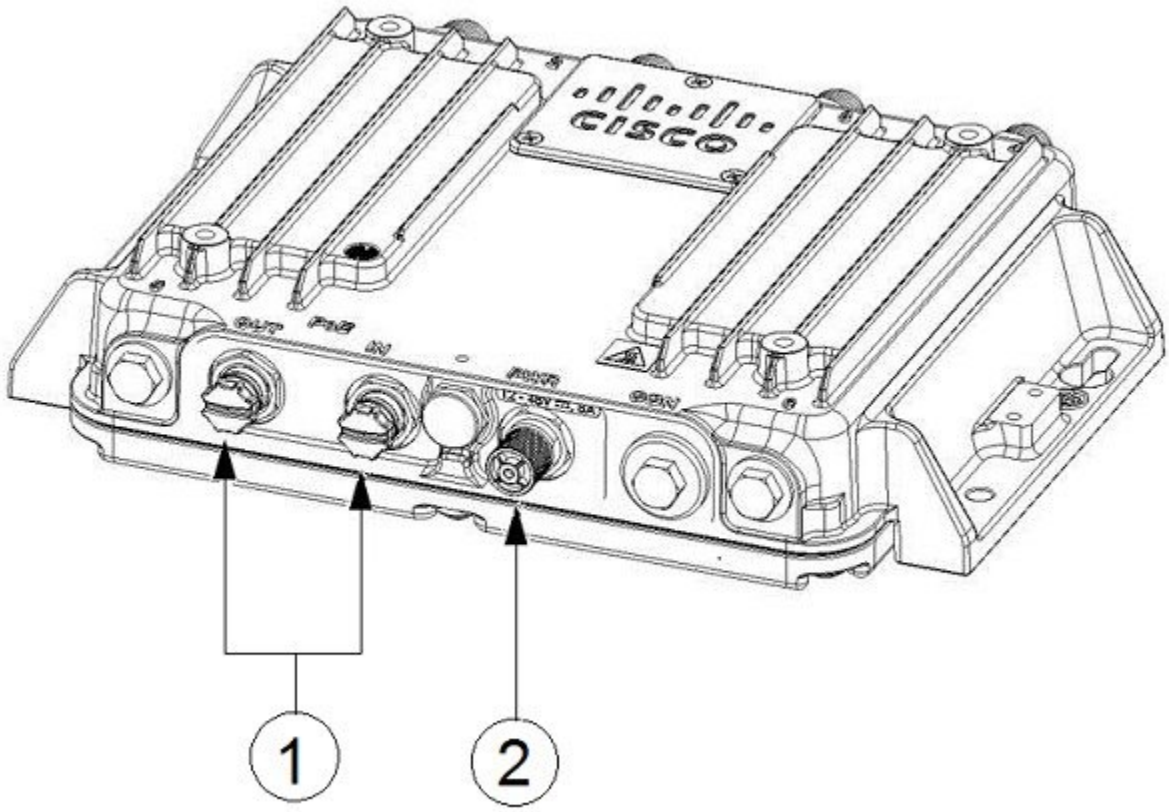

1	PoE ports with caps	2	PWR connector with cap

To unpack the access point:

Procedure

Step 1 Open the shipping container and carefully remove the contents.

Step 2 Return all packing materials to the shipping container, and save it.

Step 3 Ensure that all the access point package items are included in the shipment.

What to do next

Note If any item is damaged or missing, notify your sales representative.

Mounting the Access Point

For instructions about mounting the access point, see the Cisco IW3702 Access Point Mounting Guide

Connecting the Protective Ground and Power

Perform the following steps in order when connecting the access point to power and ground.

1. Grounding the Access Point, on page 19
2. Wiring the Access Point DC Power, on page 21

Grounding the Access Point

In all installations, after mounting the access point, you must properly ground the unit before connecting power cables.

Danger **This equipment must be grounded. Never defeat the ground conductor or operate the equipment in the absence of a suitably installed ground conductor. Contact the appropriate electrical inspection authority or an electrician if you are uncertain that suitable grounding is available.** Statement 1024

Danger **Installation of the equipment must comply with local and national electrical codes.** Statement 1074

The access point is shipped with a grounding kit.

Figure 7: Access Point Grounding Kit Contents

1	Grounding lug
2	Screws x 2, M4 x 6mm

Note The grounding kit also includes the oxide inhibitor, which is contained in a tube.

To ground the access point:

Procedure

Step 1 Use a crimping tool to crimp a 6-AWG ground wire (not included in the grounding kit) to the ground lug.

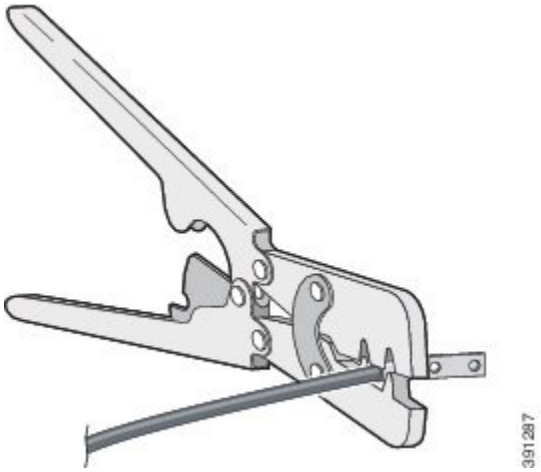

Step 2 Connect the supplied ground lug to the access point ground connection point using the supplied screws. Apply supplied oxide inhibitor between the ground lug and the access point ground connection.

Step 3 Tighten the screws to 20-25 inch-lbs of torque.

1	Ground connection

Step 4 If necessary, strip the other end of the ground wire and connect it to a reliable earth ground such as a grounding rod or appropriate ground point on a grounded pole. Length of the ground cable should not exceed 1 meter, and 0.5 meter is preferred. Use supplied oxide inhibitor on the grounded interface.

Wiring the Access Point DC Power

To wire the access point to a DC power source:

Procedure

Step 1 Verify that the access point is grounded (see Grounding the Access Point, on page 19).

Step 2 Connect the power lead to the PWR connector by turning the cable clockwise, as shown in the following figure.

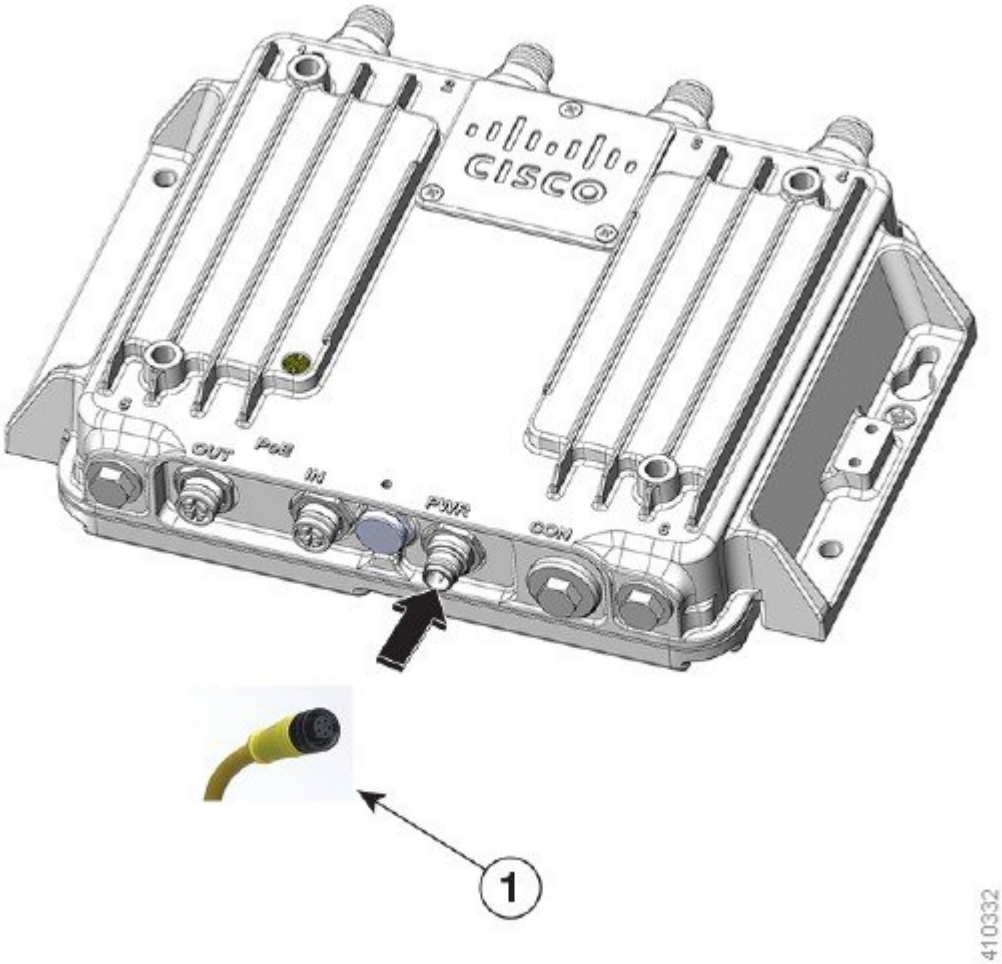

1	Power cable and PWR connector

Step 3 Connect the other end of the power cable to the DC power source using the power source wiring instructions. The PWR connector pinout descriptions are in Power Port, on page 75.

Connecting the Antennas

Connect each antenna based on:

- Antenna arrangement, cabling, lightning arrestor, and adapter information in Examples of Access Point and Antenna Deployment Configurations, on page 26.
- Installation information in Antenna Types and Models, on page 24.

Connecting to Access Point Ports

This section describes connecting the access point to PoE.

Danger **For connections outside the building where the equipment is installed, the following ports must be connected through an approved network termination unit with integral circuit protection.10/100/1000 Ethernet Statement 1044**

Connecting to the PoE IN or PoE OUT Port

Procedure

Step 1 Use shielded cables with a M12 X-Code plug to connect to the PoE IN or PoE OUT ports.

Note Ethernet cables must have an internal shield around the signal wires. There must be a contiguous ground between the connector shell that interfaces with the IW3702 and the connector shell on the far end of the cable. Maximum cable length should not exceed 100 meters.

Step 2 Connect the PoE IN cable to the PoE IN port, or the PoE OUT cable to the PoE OUT port by turning the cable clockwise, as shown in the following figure.

Figure 8: Connecting to the PoE IN or PoE OUT Ports

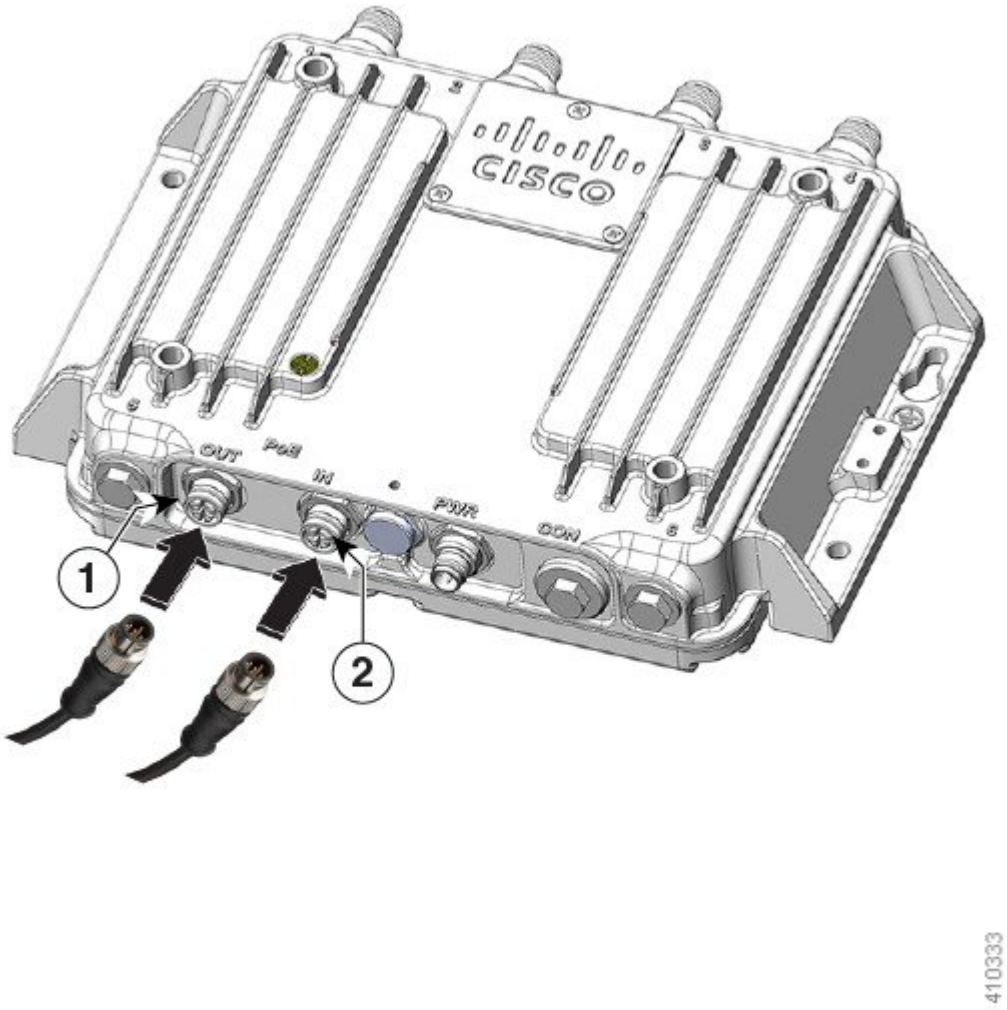

1	PoE OUT cable
2	PoE IN cable

Note When powered over the PoE IN port, PoE OUT functionality is not supported.

Antennas and RF Accessories

This section describes antennas, RF Accessories, and their configuration for the access point.

Cisco recommends using a coax seal (such as CoaxSeal) for outdoor connections, to prevent moisture and other weathering elements from affecting performance. For more information on using coax seal on the N connector to cable or antenna interface, see the instructions on your antenna documents.

Antenna Types and Models

The antennas used in these configurations are:

- Cisco Aironet Dual-Band Omnidirectional Antenna (White model—Cisco PID AIR-ANT2547V-N)

  Cisco Aironet Dual-Band Omnidirectional Antenna (Cisco PID AIR-ANT2547VG-N)

  These are the related models:

  - White model (Cisco PID AIR-ANT2547V-N=)
  - Grey Model (Cisco PID AIR-ANT2547VG-N=)

- Cisco Aironet Four-Port Dual-Band Polarization-Diverse Array Antenna (Cisco PID AIR-ANT2513P4M-N)
- Cisco Aironet Four-Element, MIMO, Dual-Band Ceiling Mount Omnidirectional Antenna (Cisco PID AIR-ANT2524V4C-R)
- Cisco Aironet Dual-Band MIMO Wall-Mounted Omnidirectional Antenna (Cisco PID AIR-ANT2544V4M-R)
- Cisco Aironet 2.4 GHz/5 GHz MIMO 4-Element Patch Antenna (Cisco PID AIR-ANT2566P4W-R)
- Cisco Aironet Dual-band Dipole Antenna (Cisco PID AIR-ANT2524DB-R, AIR-ANT2524DG-R, and AIR-ANT2524DW-R)
- Cisco Aironet 2.4-GHz 13-dBi Directional Antenna (Cisco PID AIR-ANT2413P2M-N)
- Cisco Aironet 5-GHz 13-dBi Directional Antenna (Cisco PID AIR-ANT5114P2M-N)
- Cisco Aironet 2.4 GHz/5 GHz Dual-Band Polarization-Diverse Directional Array Antenna (AIR-ANT2566D4M-R)

RF Accessories

This section contains the IW3702 RF accessories: cables, adapters, and lightning arrestors.

The following table defines the cables available for interconnecting the antennas and the access point.

Table 4: RF Cables

Cisco PID	Description[2]	Loss at 2.4 GHz	Loss at 5.8 GHz
N(m) to N(m) RF cables:			
AIR-CAB002L240-N	N(m)-R/A to N(m)-STR, LMR-240 , 2ft RF cable Type: Indoor Interconnect. Not DB, CMR or CMP	0.5 dB	0.8 dB
CAB-L400-5-N-N	N(m)-R/A to N(m)-STR, LMR-400-DB , 5ft RF cable Type: outdoor DB (direct burial)	0.5 dB	0.8 dB

Cisco PID	Description[2]	Loss at 2.4 GHz	Loss at 5.8 GHz
CAB-L400-5-N-NS	N(m)-STR to N(m)-STR, LMR-400-DB , 5ft RF cable Type: outdoor DB (direct burial)	0.5 dB	0.8 dB
AIR-CAB010LL-N	N(m)-R/A to N(m)-STR, LMR-400-DB , 10ft RF cable Type: outdoor DB (direct burial)	0.9 dB	1.5 dB
CAB-L400-20-N-N	N(m)-R/A to N(m)-STR, LMR-400-DB, 20ft RF cable Type: outdoor DB (direct burial)	1.6 dB	2.5 dB
CAB-L600-30-N-N	N(m)-R/A to N(m)-STR, LMR-600-DB, 30ft RF cable Type: outdoor DB (direct burial)	1.6 dB	2.5 dB
AIR-CAB025HZ-N	N(m)-STR to N(m)-STR, LMR-400, 25ft RF cable with ruggedised jacket to offer petrochemical resistance and oils resistance Type: outdoor DB (direct burial) with additional resistance to petrochemicals and oils	2.0 dB	3.5 dB
N(m) to RP-TNC(jack) RF cables:			
CAB-L240-10-N-R	N(m)-R/A to RP-TNC(jack), LMR-240-DB, 10 ft RF cable Type: outdoor DB (direct burial)	1.5 dB	2.5 dB
CAB-L400-20-N-R	N(m)-R/A to RP-TNC(jack), LMR-400-DB, 20 ft RF cable Type: outdoor DB (direct burial)	1.6 dB	2.5 dB

[2] N(m)-R/A = N(male) right angle connector

N(m)-STR = N(male) straight connector

RP-TNC connectors used on cables specified in the table are straight.

The following table shows the RF coaxial adapters.

Table 5: RF Coaxial Adapters

Cisco PID	Description
AIR-ACC370-NF-NF	N(f) to N(f) RF adapter DC-11 GHz Typical use is adapting between two N(m) cables.
AIR-ACC370-NM-RF	N(m) to RP-TNC (jack) RF adapter DC-6 GHz

The following table shows the lightning arrestors.

Table 6: Lightning Arrestors

Cisco PID	Description
CGR-LA-NF-NF	N(f)-N(f) lightning arrestor, GDT type, DC-6GHz. Supports both 2.4 GHz and 5 GHz operation and has two N(f) connectors. Provides lightning and related energy surges at the antenna from reaching the radio circuitry. A ground ring is included.
CGR-LA-NM-NF	N(m)-N(f) lightning arrestor, GDT type, DC-6GHz Supports both 2.4 GHz and 5 GHz operation and has N(m) and N(f) connectors. Provides lightning and related energy surges at the antenna from reaching the radio circuitry. A ground ring is included. For more information, see http://www.cisco.com/c/en/us/td/docs/routers/connectedgrid/lightning_arrestor/Lightning_Arrestor_for_the_Cisco_1240_Con

Examples of Access Point and Antenna Deployment Configurations

The section provides examples of antenna installation configurations, including applicable accessories such as cables, lighting arrestors, and adapters.

Indoor or Outdoor Cisco Aironet Dual-Band Omnidirectional Antenna and Access Point

Table 7: Indoor or Outdoor Dual-Band Omnidirectional Antenna and Access Point

Item	Description
Antenna Arrangement	4 x Cisco Aironet dual-band AIR-ANT2547V-N or AIR-ANT2547VG-N omnidirectional antennas directly connected to access point antenna connectors.
Access Point	IW3702-2E-UXK9 or IW3702-2E-x-K9 **Note** Do not use this configuration with the IW3702-4E-UXK9 or IW3702-4E-x-K9 model. For the -4E models, all four antenna ports are on one side, and would be too close to each other for optimal MIMO IEEE 802.11ac operation if attached antennas directly to all 4 ports.
Indoor Cable	N/A
Adapter and/or Lightning Arrestor	N/A
Outdoor Cable	N/A

Item	Description
Antenna	Select from: • White model, Cisco PID [3] AIR-ANT2547V-N • Grey Model, Cisco PID AIR-ANT2547VG-N 4 x Cisco Aironet dual-band omnidirectional antennas are required. The antenna specifications are: • 2400–2484MHz, 5150–5875MHz, dual-band, WiFi, operating frequency range • 4 dBi (2.4 GHz), 7 dBi (5 GHz) gain • 11 in. (27.94 cm) stick antennas for indoor or outdoor use with a type N(m) connector • IP67 rated, -40 to 185°F (-40°C to 85°C) operating temperature range

[3] PID = Product identifier code.

Outdoor Cisco Aironet Dual-Band Omnidirectional Antenna and Access Point for Remote and Indoor Use Scenario

Table 8: Outdoor Dual-Band Omnidirectional Antenna and Access Point for Remote and Indoor Use Scenario

Item	Description
Antenna Arrangement	4 x Cisco Aironet dual-band AIR-ANT2547V-N or AIR-ANT2547VG-N omnidirectional antennas mounted remotely outdoors, with the access point located remotely, indoors, or enclosed.
Access Point	IW3702-2E-x-K9, IW3702-4E-x-K9, IW3702-2E-UXK9, IW3702-4E-UXK9
Adapter and/or Lightning Arrestor	You need: • 4 x DC pass, N(f)-N(f) lightning arrestors. Cisco PID CGR-LA-NF-NF. **Note** Lightning arrestors must be appropriately grounded to infrastructure system ground designed to conduct lightning currents to Earth ground. This configuration assumes that the lightning arrestor is mounted on a building or enclosure penetration panel, and that it is interfaced on both sides with N(m) cables. • 4 x N(f) to N(f) RF adapters. Cisco PID AIR-ACC370-NF-NF.
Indoor Cable	This configuration assumes that there is an N(m) to N(m) cable connected between the lightning arrestor and the Access Point. For indoor cable routing, the deployment must balance the requirements of Fire Code, Electrical Code, and any other applicable regulations, versus RF cable type, cost, RF cable length, and RF cable insertion loss.

Item	Description
Outdoor Cable	Select from: • 4x N(m)-R/A to N(m)-STR, LMR-400-DB , 5’ RF cable, Cisco PID: CAB-L400-5-N-N • 4 x N(m)-STR to N(m)-STR, LMR-400-DB , 5’ RF cable, Cisco PID: CAB-L400-5-N-NS • 4x N(m)-R/A to N(m)-STR, LMR-400-DB , 10’ RF cable, Cisco PID: AIR-CAB010LL-N • 4 x N(m)-R/A to N(m)-STR, LMR-400-DB, 20 ft. cables. Cisco PID CAB-L400-20-N-N • 4 x N(m)-R/A to N(m)-STR, LMR-600-DB, 30 ft. cables. Cisco PID CAB-L600-30-N-N • 4 x N(m)-STR to N(m)-STR, LMR-400-DB, 25’ RF cable with petrochemical and oils resistance, Cisco PID AIR-CAB025HZ-N
Antenna	Select from: • White model, Cisco PID AIR-ANT2547V-N= • Grey Model, Cisco PID AIR-ANT2547VG-N= 4 x Cisco Aironet dual-band omnidirectional antennas are required. The antenna specifications are: • 2400-2484MHz, 5150-5875MHz, dual-band, WiFi, operating frequency range • 4 dBi (2.4 GHz), 7 dBi (5 GHz) gain • 11 in. (27.94 cm) stick antennas for indoor or outdoor use with a type N(m) connector • IP67 rated, -40 to 185°F (-40°C to 85°C) operating temperature range **Note** To mast-mount the antenna, you must purchase a mast-mount U-bolt bracket from a third party.

Indoor Cisco Aironet Dual-Band Omnidirectional Antenna Directly and Cable Connected to Access Point

Table 9: Indoor Dual-Band Omnidirectional Antenna Directly and Cable Connected to Access Point

Item	Description
Antenna Arrangement	4 x indoor Cisco Aironet dual-band AIR-ANT2547V-N or AIR-ANT2547VG-N omnidirectional antennas connected to the IW3702-2E-UXK9 or IW3702-2E-x-K9 model: • 2 x antennas directly mounted on top panel side. • 2 x antennas connected via cables on the bottom side.
Access Point	IW3702-2E-UXK9 or IW3702-2E-x-K9

Item	Description
Adapter and/or Lightning Arrestor	You need: • 2 x N(f) to N(f) RF adapters. Cisco PID AIR-ACC370-NF-NF. • 2 x DC pass, N(m)-N(f) lightning arrestors. Cisco PID CGR-LA-NM-NF. Installed on the router ports with cables. **Note** Lightning arrestors must be appropriately grounded to infrastructure system ground designed to conduct lightning currents to Earth ground.
Indoor Cable	For indoor cable routing, the deployment must balance the requirements of Fire Code, Electrical Code, and any other applicable regulations, versus RF cable type, cost, RF cable length, and RF cable insertion loss.
Outdoor Cable	Select from: • 2 x N(m)-R/A to N(m)-STR, LMR-400-DB , 5’ RF cable, Cisco PID: CAB-L400-5-N-N • 2x N(m)-STR to N(m)-STR, LMR-400-DB , 5’ RF cable, Cisco PID: CAB-L400-5-N-NS • 2x N(m)-R/A to N(m)-STR, LMR-400-DB , 10’ RF cable, Cisco PID: AIR-CAB010LL-N • 2 x N(m)-R/A to N(m)-STR, LMR-400-DB, 20’ RF cable, Cisco PID: CAB-L400-20-N-N • 2 x N(m)-R/A to N(m)-STR, LMR-600-DB, 30’ RF cable, Cisco PID: CAB-L600-30-N-N • 2 x N(m)-STR to N(m)-STR, LMR-400-DB, 25’ RF cable with petrochemical and oils resistance, Cisco PID AIR-CAB025HZ-N
Antenna	Select from: • White model, Cisco PID AIR-ANT2547V-N • Grey Model, Cisco PID AIR-ANT2547VG-N 4 x Cisco Aironet dual-band omnidirectional antennas are required. The antenna specifications are: • 2400-2484MHz, 5150-5875MHz, dual-band, WiFi, operating frequency range • 4 dBi (2.4 GHz), 7 dBi (5 GHz) gain • 11 in. (27.94 cm) stick antennas for indoor or outdoor use with a type N(m) connector • IP67 rated, -40 to 185°F (-40°C to 85°C) operating temperature range

Indoor Only Dual-Band Omnidirectional Articulating Joint Antenna and Access Point

Table 10: Indoor only Dual-Band Omnidirectional Articulating Joint Antenna and Access Point

Item	Description
Antenna Arrangement	4 x Cisco Aironet dual-band AIR-ANT2524DW-R omnidirectional articulating joint indoor antennas connected to access point with adapters in between. This configuration is for indoor applications where swivel mount is desirable to control dipole antenna tilt/polarization.
Access Point	IW3702-2E-UXK9 or IW3702-2E-x-K9 **Note** Do not use this configuration with the IW3702-4E-UXK9 or IW3702-4E-x-K9 model. For the -4E models, all four antenna ports are on one side, and would be too close to each other for optimal MIMO IEEE 802.11ac operation with all antennas directly connected.
Indoor Cable	N/A
Adapter and/or Lightning Arrestor	You need: • 4 x N(m) to RP-TNC (jack), RF coax adapters. Cisco PID AIR-ACC370-NM-RF. **Note** No lightning arrestors are required.
Outdoor Cable	N/A
Antenna	4 x Cisco Aironet dual-band AIR-ANT2524DW-R indoor articulating joint omnidirectional antennas are required. The antenna specifications are: • 2400–2500MHz, 5150–5850MHz, dual-band, WiFi, operating frequency range • 2 dBi (2.4 GHz), 4 dBi (5 GHz) gain • Articulating joint. • 6.63 in. (16.95 cm) dipole antennas for indoor only use. • RP-TNC (plug) connector. • -4 to 140°F (-20°C to 60°C) operating temperature range. • White color model, Cisco PID AIR-ANT2524DW-R.

Outdoor Cisco Aironet Four-Port Dual-Band Polarization-Diverse Array Antenna and Access Point

Table 11: Outdoor Four-Port Dual-Band Polarization-Diverse Array Antenna and Access Point

Item	Description
Antenna Arrangement	1 x Cisco Aironet AIR-ANT2513P4M-N four-port dual-band polarization-diverse array antenna located outdoors, connected by external cable to the access point antenna connector.
Access Point	IW3702-2E-x-K9, IW3702-4E-x-K9, IW3702-2E-UXK9, or IW3702-4E-UXK9

Item	Description
Adapter and/or Lightning Arrestor	4 x DC pass, N(m)-N(f) lightning arrestors. Cisco PID CGR-LA-NM-NF. **Note** Lightning arrestors must be appropriately grounded to infrastructure system ground designed to conduct lightning currents to Earth ground.
Indoor Cable	N/A
Outdoor Cable	Select from: • 4 x N(m)-R/A to N(m)-STR, RF cable, CAB-L400-5-N-N • 4 x N(m)-STR to N(m)-STR, LMR-400-DB, 5’ RF cable, Cisco PID: CAB-L400-5-N-NS • 4x N(m)-R/A to N(m)-STR, LMR-400-DB, 10’ RF cable, Cisco PID: AIR-CAB010LL-N • 4 x N(m)-R/A to N(m)-STR, LMR-400-DB, 20’, CAB-L400-20-N-N • 4 x N(m)-R/A to N(m)-STR, LMR-600-DB, 30’, CAB-L600-30-N-N • 4 x N(m)-STR to N(m)-STR, LMR-400-DB, 25’ RF cable with petrochemical and oils resistance, Cisco PID AIR-CAB025HZ-N
Antenna	1 x Cisco Aironet AIR-ANT2513P4M-N four-port dual-band polarization-diverse array antenna is required. The antenna specifications are: • 2.4-2.5 GHz, 5.15-5.925 GHz dual-band WiFi operating frequency ranges • 13 dBi peak gain • Type N(f) connector • IP67 rated, -40 to 185°F (-40°C to 85°C) operating temperature range • Cisco PID AIR-ANT2513P4M-N

Outdoor Cisco Aironet Four-Port Dual-Band Polarization-Diverse Array Antenna and Access Point for Remote or Indoor Use Scenario

Table 12: Outdoor Four-Port Dual-Band Polarization-Diverse Array Antenna and Access Point for Remote or Indoor Use Scenario

Item	Description
Antenna Arrangement	1 x Cisco Aironet AIR-ANT2513P4M-N four-port dual-band polarization-diverse array antenna mounted remotely outdoors, with access point indoors or enclosed.
Access Point	IW3702-2E-x-K9, IW3702-4E-x-K9, IW3702-2E-UXK9 or IW3702-4E-UXK9
Adapter and/or Lightning Arrestor	4 x DC pass, N(f)-N(f) lightning arrestors. Cisco PID CGR-LA-NF-NF. **Note** Lightning arrestors must be appropriately grounded to infrastructure system ground designed to conduct lightning currents to Earth ground. This configuration assumes that the lightning arrestor is mounted on a building or enclosure penetration panel, and that it is interfaced on both sides with N(m) cables.

Item	Description
Indoor Cable	This configuration assumes that there is an N(m) to N(m) cable connected between the lightning arrestor and the Access Point. For indoor cable routing, the deployment must balance the requirements of Fire Code, Electrical Code, and any other applicable regulations, versus RF cable type, cost, RF cable length, and RF cable insertion loss.
Outdoor Cable	Select from: • 4 x N(m)-R/A to N(m)-STR, LMR-400-DB , 5’ RF cable, Cisco PID: CAB-L400-5-N-N • 4 x N(m)-STR to N(m)-STR, LMR-400-DB , 5’ RF cable, Cisco PID: CAB-L400-5-N-NS • 4 x N(m)-R/A to N(m)-STR, LMR-400-DB , 10’ RF cable, Cisco PID: AIR-CAB010LL-N • 4 x N(m)-R/A to N(m)-STR, LMR-400-DB, 20 ft. cable, Cisco PID CAB-L400-20-N-N • 4 x N(m)-R/A to N(m)-STR, LMR-600-DB, 30 ft. cable, Cisco PID CAB-L600-30-N-N • 4 x N(m)-STR to N(m)-STR, LMR-400-DB, 25’ RF cable with petrochemical and oils resistance, Cisco PID AIR-CAB025HZ-N
Antenna	1 x Cisco Aironet AIR-ANT2513P4M-N four-port dual-band polarization-diverse array antenna is required. The antenna specifications are: • 2.4-2.5 GHz, 5.15-5.925 GHz dual-band WiFi operating frequency ranges • 13 dBi peak gain • Type N(f) connector • IP67 rated, -40 to 185°F (-40°C to 85°C) operating temperature range • Cisco PID AIR-ANT2513P4M-N

Indoor Cisco Aironet Four-Element MIMO Dual-Band Ceiling Mount Omnidirectional Antenna and Access Point

Table 13: Indoor Four-Element MIMO Dual-Band Ceiling Mount Omnidirectional Antenna and Access Point

Item	Description
Antenna Arrangement	1 x Cisco Aironet AIR-ANT2524V4C-R indoor four-element MIMO dual-band ceiling mount omnidirectional antenna directly connected to the access point. Antennas are indoor only.
Access Point	IW3702-2E-x-K9, IW3702-4E-x-K9, IW3702-2E-UXK9, or IW3702-4E-UXK9
Adapter and/or Lightning Arrestor	You need: • 4 x N(m) to RP-TNC (jack), RF coax adapters. Cisco PID AIR-ACC370-NM-RF. **Note** No lightning arrestors are required.

Item	Description
Indoor Cable	For indoor cable routing, the deployment must balance the requirements of Fire Code, Electrical Code, and any other applicable regulations, versus RF cable type, cost, RF cable length, and RF cable insertion loss.
Outdoor Cable	N/A
Antenna	1 x Cisco Aironet AIR-ANT2524V4C-R indoor four-element, MIMO, dual-band ceiling mount omnidirectional antennas are required. The antenna specifications are: • 2400-2500 MHz, 5150-5850 MHz dual-band WiFi operating frequency range • MIMO operation • 2 dBi (2.4 GHz), 4 dBi (5.8 GHz) gain • 4 x integrated cables with RP-TNC (plug) connector • Indoor operation, 32 to 133°F (0 to 56°C) operating temperature range • Cisco PID AIR-ANT2524V4C-R=

Indoor or Outdoor Cisco Aironet Dual-Band MIMO Wall-Mounted Omnidirectional Antenna and Access Point

Table 14: Indoor or Outdoor Dual-Band MIMO Wall-Mounted Omnidirectional Antenna and Access Point

Item	Description
Antenna Arrangement	1 x Cisco Aironet AIR-ANT2544V4M-R dual-band MIMO wall-mounted omnidirectional antenna directly connected to the access point antenna connector.
Access Point	IW3702-2E-x-K9, IW3702-4E-x-K9, IW3702-2E-UXK9 or IW3702-4E-UXK9
Adapter and/or Lightning Arrestor	You need: • 4 x N(m) to RP-TNC (jack), RF coax adapters. Cisco PID AIR-ACC370-NM-RF **Note** No lightning arrestors are required.
Indoor Cable	N/A
Outdoor Cable	N/A

Item	Description
Antenna	1 x Cisco Aironet AIR-ANT2544V4M-R dual-band MIMO wall-mounted omnidirectional antennas are required. The antenna specifications are: • 2400-2484 MHz, 5150-5850MHz dual-band WiFi operating frequency range • Bands 5150-5350MHz are not supported for outdoor installations within Regulatory Domain E • MIMO, omnidirectional operation • 4 dBi (2.4 GHz), 4 dBi (5.8 GHz) gain • Indoor or outdoor operation, -40 to 158°F (-40 to +70°C) operating temperature range • 4 x integrated cables with RP-TNC (plug) connector • Cisco PID AIR-ANT2544V4M-R

Outdoor Cisco Aironet Dual-Band MIMO Wall-Mounted Omnidirectional Antenna and Access Point for Indoor Use Scenario

Table 15: Outdoor Dual-Band MIMO Wall-Mounted Omnidirectional Antenna and Access Point for Indoor Use Scenario

Item	Description
Antenna Arrangement	1 x Cisco Aironet AIR-ANT2544V4M-R dual-band MIMO wall-mounted omnidirectional antenna mounted remotely outdoors.
Access Point	IW3702-2E-x-K9, IW3702-4E-x-K9, IW3702-2E-UXK9 or IW3702-4E-UXK9
Adapter and/or Lightning Arrestor	4 x DC pass, N(f)-N(f) lightning arrestors, Cisco PID CGR-LA-NF-NF. **Note** Lightning arrestors must be appropriately grounded to infrastructure system ground designed to conduct lightning currents to Earth ground. This configuration assumes that the lightning arrestor is mounted on a building or enclosure penetration panel, and that it is interfaced on both sides with N(m) cables.
Indoor Cable	This configuration assumes that there is an N(m) to N(m) cable connected between the lightning arrestor and the Access Point. For indoor cable routing, the deployment must balance the requirements of Fire Code, Electrical Code, and any other applicable regulations, versus RF cable type, cost, RF cable length, and RF cable insertion loss.
Outdoor Cable	Select from: • 4 x N(m)-R/A to RP-TNC (jack), LMR-240-DB, 10 ft. cable. Cisco PID CAB-L240-10-N-R • 4 x N(m)-R/A to RP-TNC (jack), LMR-400-DB, 20 ft. cable. Cisco PID CAB-L400-20-N-R

Item	Description
Antenna	1 x Cisco Aironet AIR-ANT2544V4M-R dual-band MIMO wall-mounted omnidirectional antenna is required. The antenna specifications are: • 2400-2484 MHz, 5150-5850MHz dual-band WiFi operating frequency range • MIMO, omnidirectional operation • 4 dBi (2.4 GHz), 4 dBi (5.8 GHz) gain • Indoor or outdoor operation, -40 to 158°F (-40 to +70°C) operating temperature range • 4 x integrated cables with RP-TNC (plug) connector • Cisco PID AIR-ANT2544V4M-R

Indoor or Outdoor Cisco Aironet Dual-Band MIMO 4-Element Patch Antenna and Access Point

Table 16: Indoor or Outdoor Dual-Band MIMO 4-Element Patch Antenna and Access Point

Item	Description
Antenna Arrangement	1 x Cisco Aironet AIR-ANT2566P4W-R dual-band WiFi MIMO 4-element patch antenna directly connected to the access point.
Access Point	IW3702-2E-x-K9, IW3702-4E-x-K9, IW3702-2E-UXK9 or IW3702-4E-UXK9
Adapter and/or Lightning Arrestor	You need: • 4 x N(m) to RP-TNC (jack), RF coax adapters. Cisco PID AIR-ACC370-NM-RF. **Note** No lightning arrestors are required.
Indoor Cable	N/A
Outdoor Cable	N/A
Antenna	1 x Cisco Aironet AIR-ANT2566P4W-R dual-band WiFi MIMO 4-element patch antenna is required. The antenna specifications are: • 2400-2484 MHz, 5150-5850 MHz operating frequency range • WiFi, MIMO operation • Single polarization • 6dBi (2.4 GHz), 6 dBi (5.8 GHz) gain • IP54 rated, indoor or outdoor operation, -40 to 158°F (-40 to +70°C) operating temperature range • 4 x integrated cables with RP-TNC (plug) connector • Cisco PID AIR-ANT2566P4W-R

Outdoor Cisco Aironet Dual-Band MIMO 4-Element Patch Antenna and Access Point for Indoor or Enclosed Use Scenario

Table 17: Outdoor Dual-Band MIMO 4-Element Patch Antenna and Access Point for Indoor or Enclosed Use Scenario

Item	Description
Antenna Arrangement	1 x Cisco Aironet AIR-ANT2566P4W-R dual-band WiFi MIMO 4-element patch antenna mounted remotely outdoors, access point is indoors.
Access Point	IW3702-2E-x-K9, IW3702-4E-x-K9, IW3702-2E-UXK9 or IW3702-4E-UXK9
Adapter and/or Lightning Arrestor	4 x DC pass, N(f)-N(f), lightning arrestors. Cisco PID CGR-LA-NF-NF. **Note** Lightning arrestors must be appropriately grounded to infrastructure system ground designed to conduct lightning currents to Earth ground. This configuration assumes that the lightning arrestor is mounted on a building or enclosure penetration panel, and that it is interfaced on both sides with N(m) cables.
Indoor Cable	This configuration assumes that there is an N(m) to N(m) cable connected between the lightning arrestor and the Access Point. For indoor cable routing, the deployment must balance the requirements of Fire Code, Electrical Code, and any other applicable regulations, versus RF cable type, cost, RF cable length, and RF cable insertion loss.
Outdoor Cable	Select from: • 4 x N(m)-R/A to RP-TNC (jack), LMR-240-DB, 10 ft. cables. Cisco PID CAB-L240-10-N-R • 4 x N(m)-R/A to RP-TNC (jack), LMR-400-DB, 20 ft. cables. Cisco PID CAB-L400-20-N-R
Antenna	1 x Cisco Aironet AIR-ANT2566P4W-R dual-band WiFi MIMO 4-element patch antenna is required. The antenna specifications are: • 2400-2484 MHz, 5150-5850 MHz operating frequency range • WiFi, MIMO operation • Single polarization • 6dBi (2.4 GHz), 6 dBi (5.8 GHz) gain • IP54 rated, indoor or outdoor operation, -40 to 158°F (-40 to +70°C) operating temperature range • 4 x integrated cables with RP-TNC (plug) connector • Cisco PID AIR-ANT2566P4W-R

Indoor or Outdoor Cisco Aironet Dual-Band Polarization-Diverse Directional Array Antenna and Access Point

Table 18: Indoor or Outdoor Dual-Band Polarization-Diverse Directional Array Antenna and Access Point

Item	Description
Antenna Arrangement	1 x Cisco Aironet AIR-ANT2566D4M-R Dual-Band Polarization-Diverse Directional Array antennas directly connected to the access point.
Access Point	IW3702-2E-x-K9, IW3702-4E-x-K9, IW3702-2E-UXK9 or IW3702-4E-UXK9
Adapter and/or Lightning Arrestor	You need: • 4 x N(m) to RP-TNC (jack), RF coax adapters. Cisco PID AIR-ACC370-NM-RF. **Note** No lightning arrestors are required.
Indoor Cable	N/A
Outdoor Cable	N/A
Antenna	1 x Cisco Aironet AIR-ANT2566D4M-R Dual-Band Polarization-Diverse Directional Array antenna is required. The antenna specifications are: • 2400-2484 MHz, 5150-5850 MHz operating frequency range • WiFi, MIMO operation • Dual polarization • 6dBi (2.4 GHz), 6 dBi (5.8 GHz) gain • IP67 rated, indoor or outdoor operation, -40 to 158°F (-40 to +70°C) operating temperature range • 4 x integrated cables with RP-TNC (plug) connector • Cisco PID AIR-ANT2566D4M-R

Outdoor Cisco Aironet Dual-Band Polarization-Diverse Directional Array Antenna and Access Point for Indoor or Enclosed AP Use Scenario

Table 19: Outdoor Dual-Band Polarization-Diverse Directional Array Antenna and Access Point for Indoor or Enclosed AP Use Scenario

Item	Description
Antenna Arrangement	1 x Cisco Aironet AIR-ANT2566D4M-R Dual-Band Polarization-Diverse Directional Array antenna mounted remotely outdoors, access point is indoors.
Access Point	IW3702-2E-x-K9, IW3702-4E-x-K9, IW3702-2E-UXK9 or IW3702-4E-UXK9

Item	Description
Adapter and/or Lightning Arrestor	4 x DC pass, N(f)-N(f), lightning arrestors. Cisco PID CGR-LA-NF-NF. **Note** Lightning arrestors must be appropriately grounded to infrastructure system ground designed to conduct lightning currents to Earth ground. This configuration assumes that the lightning arrestor is mounted on a building or enclosure penetration panel, and that it is interfaced on both sides with N(m) cables.
Indoor Cable	This configuration assumes that there is an N(m) to N(m) cable connected between the lightning arrestor and the Access Point. For indoor cable routing, the deployment must balance the requirements of Fire Code, Electrical Code, and any other applicable regulations, versus RF cable type, cost, RF cable length, and RF cable insertion loss.
Outdoor Cable	Select from: • 4 x N(m)-R/A to RP-TNC, LMR-240-DB, 10 ft. cables. Cisco PID CAB-L240-10-N-R • 4 x N(m)-R/A to RP-TNC, LMR-400-DB, 20 ft. cables. Cisco PID CAB-L400-20-N-R
Antenna	1 x Cisco Aironet AIR-ANT2566D4M-R Dual-Band Polarization-Diverse Directional Array antenna is required. The antenna specifications are: • 2400-2484 MHz, 5150-5850 MHz operating frequency range • WiFi, MIMO operation • Dual polarization • 6dBi (2.4 GHz), 6 dBi (5.8 GHz) gain • IP67 rated, indoor or outdoor operation, -40 to 158°F (-40 to +70°C) operating temperature range • 4 x integrated cables with RP-TNC (plug) connector • Cisco PID AIR-ANT2566D4M-R

Outdoor Single Band Antennas in Flexible Antenna Port (Flex Port) Configuration and Access Point

Table 20: Outdoor Single band antennas in Flexible Antenna Port (Flex Port) configuration and Access Point

Item	Description
Antenna Arrangement	1 x Cisco Aironet 2.4 GHz 13-dBi Directional Antenna AIR-ANT2413P2M-N dual port antenna connected to IW3702 ports “A” and “B” together with 1 x Cisco Aironet 5 GHz 13-dBi Directional Antenna AIR-ANT5114P2M-N dual port antenna connected to IW3702 ports “C” and “D”. Access point can be located outdoors, indoors, or located in an enclosure. Extension cables may be needed depending on distance between antennas and the access point.

Item	Description
Access Point	IW3702-2E-x-K9, IW3702-4E-x-K9, IW3702-2E-UXK9 or IW3702-4E-UXK9
Adapter and/or Lightning Arrestor	4 x DC pass, N(m)-N(f) lightning arrestors. Cisco PID CGR-LA-NM-NF. **Adapters:** 2 x AIR-ACC370-NF-NF per antenna, if using extension cables. **Description:** In addition to lightning arrestors, select from these cables and adapters: **1.** No cables or adapters requried if 30” integrated antenna cables are of sufficient length for your intended deployment. Each of the AIR-ANT2413P2M-N and AIR-ANT5114P2M-N antennas have 2 x 30” integrated cables with N(m) connectors, which can be connected directly to the IW3702 antenna port N(f) connectors. **2.** If longer cable lengths are needed for deployment, choose an appropriate number of AIR-ACC370-NF-NF adapters and cables below. **Note** N(f) to N(f) adapter is needed to connect the N(m) port of the antenna with the N(m) port of the extension cables.
	For example, if AIR-ANT2413P2M-N needs to be extended by 5ft, and AIR-ANT5114P2M-N needs to be extended by 20ft, then choose: 2 x AIR-ACC370-NF-NF adapters, plus 2 x CAB-L400-5-N-N for the AIR-ANT2413P2M-N dual port antenna, 2 x AIR-ACC370-NF-NF adapters, plus 2 x CAB-L400-20-N-N for the AIR-ANT5114P2M-N dual port antenna. Selection: • N(f) to N(f) RF adapter: Cisco PID, AIR-ACC370-NF-NF • N(m)-R/A to N(m)-STR, LMR-400-DB , 5’ RF cable, Cisco PID: CAB-L400-5-N-N, • N(m)-STR to N(m)-STR, LMR-400-DB , 5’ RF cable, Cisco PID: CAB-L400-5-N-NS • N(m)-R/A to N(m)-STR, LMR-400-DB , 10’ RF-cable, Cisco PID: AIR-CAB010LL-N • N(m)-R/A to N(m)-STR, LMR-400-DB, 20’ RF cable, Cisco PID: CAB-L400-20-N-N • N(m)-R/A to N(m)-STR, LMR-600-DB, 30’ RF cable, Cisco PID: CAB-L600-30-N-N • 4 x N(m)-STR to N(m)-STR, LMR-400-DB, 25’ RF cable with petrochemical and oils resistance, Cisco PID AIR-CAB025HZ-N
Indoor Cable	For indoor cable routing, the deployment must balance the requirements of Fire Code, Electrical Code, and any other applicable regulations, versus RF cable type, cost, RF cable length, and RF cable insertion loss.

Item	Description
Outdoor Cable	Select from the following list, and choose appropriate quantity according to the descriptions above. • N(m)-R/A to N(m)-STR, LMR-400-DB, 5’ RF cable, Cisco PID: CAB-L400-5-N-N • N(m)-STR to N(m)-STR, LMR-400-DB, 5’ RF cable, Cisco PID: CAB-L400-5-N-NS • N(m)-R/A to N(m)-STR, LMR-400-DB , 10’ RF cable, Cisco PID: AIR-CAB010LL-N • N(m)-R/A to N(m)-STR, LMR-400-DB, 20’ RF cable, Cisco PID: CAB-L400-20-N-N • N(m)-R/A to N(m)-STR, LMR-600-DB, 30’ RF cable, Cisco PID: CAB-L600-30-N-N • 4 x N(m)-STR to N(m)-STR, LMR-400-DB, 25’ RF cable with petrochemical and oils resistance, Cisco PID AIR-CAB025HZ-N
Antenna	1 x Cisco Aironet 2.4 GHz 13-dBi Directional Antenna AIR-ANT2413P2M-N dual port antenna connected to IW3702 ports “A” and “B”, together with: 1 x Cisco Aironet 5 GHz 13-dBi Directional Antenna AIR-ANT5114P2M-N dual port antenna connected to IW3702 ports “C” and “D”. AIR-ANT2413P2M-N antenna specifications: 2.4 GHz 13-dBi Directional Antenna, dual port, dual polarization. https://www.cisco.com/c/en/us/td/docs/routers/connectedgrid/antennas/installing-combined/b-cisco-industrial-routers-and-industrial-wireless-access-points-antenna-guide/m-air-ant2413p2m-n.html AIR-ANT5114P2M-N antenna specifications: 5-GHz 13-dBi Directional Antenna, dual port, dual polarization. https://www.cisco.com/c/en/us/td/docs/routers/connectedgrid/antennas/installing-combined/b-cisco-industrial-routers-and-industrial-wireless-access-points-antenna-guide/m-air-ant5114p2m-n.html **Note** AIR-ANT5114P2M-N should be specified as 13dBi in the CLI, when specifying 5GHz antenna gain selection of IW3702.

IW3702 Flexible Antenna Port

- Supports either dual-band or single band antennas on the same platform.
- Configurable via a software command.
- In single band mode, 2.4GHz radio uses antenna ports A and B, and 5GHz radio uses antenna ports C and D.

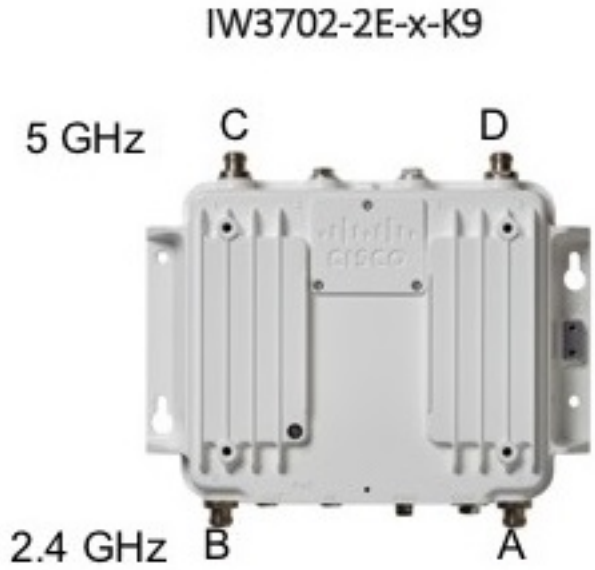

- Configuring Antenna Band Mode for autonomous mode:

  ```
  ap(config)# dot11 ant-band-mode {dual|single}
  ```

- Configuring Antenna Band Mode from the WLC CLI:

  ```
  (Cisco Controller)> config ap antenna-band-mode <single|dual> <ap_name>
  ```

Configuration

This section contains the following topics:

- Management Options, on page 13
- Configuring the Access Point, on page 42

Management Options

You can manage the access point using the following options:

- Using the Command Line Interface, on page 41
- Using the Web Browser Interface, on page 42

Using the Command Line Interface

Use either of the following methods to access the CLI:

- Telnet—This protocol allows TCP/IP connections to a host. Telnet allows a user at one site to establish a TCP connection to a login server at another site, and then pass the keystrokes from one device to the other. Telnet can accept either an IP address or domain name as the remote device address.

- Secure Shell (SSH)—This protocol provides a secure, remote connection to networking devices. The SSH software package provides secure login sessions by encrypting the entire session. SSH features strong cryptographic authentication, strong encryption, and integrity protection.

For more information about using the CLI, see the "Using the Command-Line Interface" chapter of the Cisco IOS Configuration Guide for Autonomous Aironet Access Points.

Using the Web Browser Interface

The web browser interface contains management pages you can use to change the wireless device settings, upgrade firmware, and monitor and configure other wireless devices on the network.

You use the wireless device IP address of the access point to access the web browser interface. Prior to using the web browser interface for the first time, you must assign an IP address to the access point (see Configuring the Access Point, on page 42).

To use the web browser interface:

Procedure

Step 1 Open your browser and enter the IP address of the access point in the address field.

The login screen appears.

Step 2 Enter the user name Cisco and password Cisco.

The username and password are case-sensitive.

Note We recommend that you change your user name and password after first-time log in.

Step 3 Use the system management pages to define the access point configuration settings.

What to do next

For more information about using the web browser interface, see the "Using the Web Browser Interface" chapter of the Cisco IOS Configuration Guide for Autonomous Aironet Access Points.

Configuring the Access Point

Note Refer to Installation Guidelines, on page 16 for details on registering your access point with the Wireless Internet Service Providers Association (WISPA) database.

Obtaining an IP Address

Your access point requires an IP address to operate. The access point is not shipped with a default IP address. It obtains an IP address from the DHCP server in your network when you make the connection. If your network does not have a DHCP server, the access point continues to request an IP address until you assign it one. You must configure the IP address by opening the CLI from a terminal session established through the console port on the access point.

You must know the IP address assigned to the access before you can use the browser-based management GUI. If your access point obtained its IP address the network DHCP server, you or your network administrator can obtain it by querying the DHCP server using the MAC address of the access point.

For more information, see the "Obtaining and Assigning an IP Address" section of the "Configuring the Access Point for the First Time" chapter of the Cisco IOS Configuration Guide for Autonomous Aironet Access Points.

Connecting to the Access Point Console Port

You can connect to the console port and open the CLI from a terminal session to begin configuring the device.

To connect to the access point:

Procedure

Step 1 Use a 0.5 in. (13 mm) socket wrench to remove the console (CON) port cover by turning it counterclockwise.

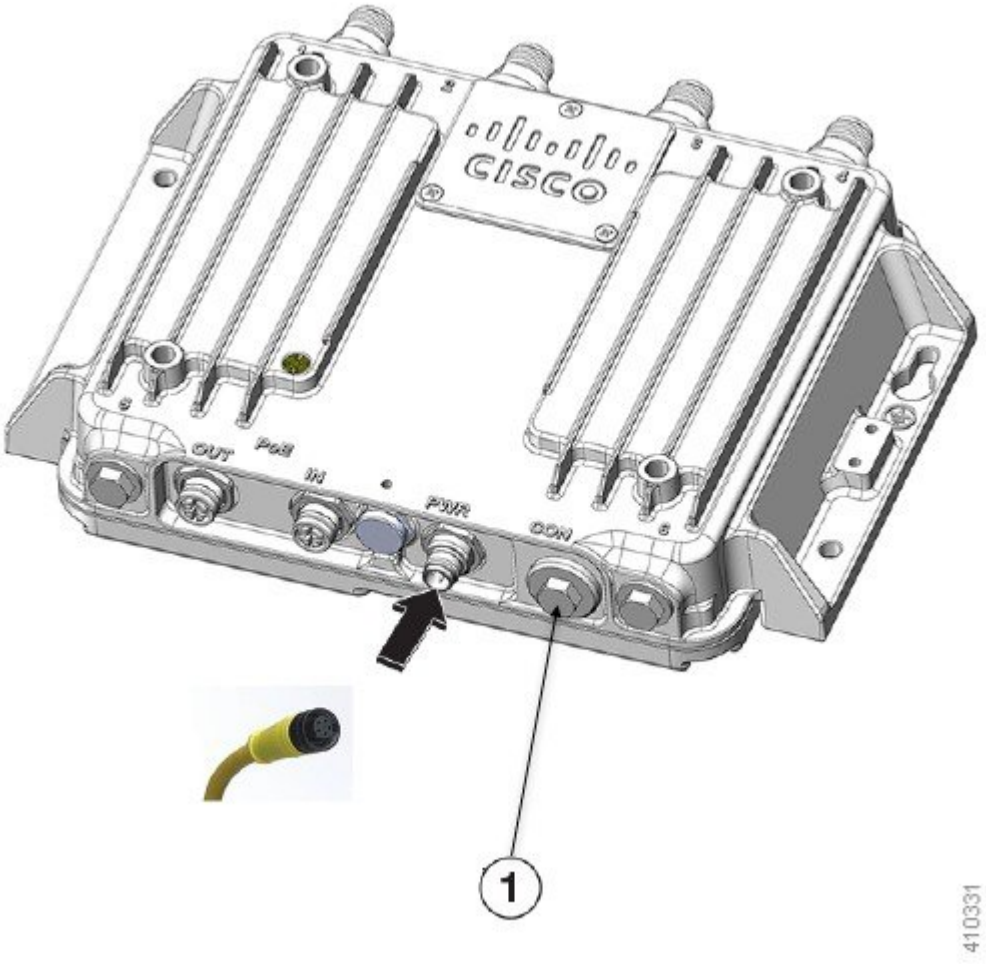

1	Console port cover

Step 2 Connect the RJ-45-to-DB-9 adapter cable to the 9-pin serial port on the PC.

Step 3 Connect the other end of the cable to the access point console port.

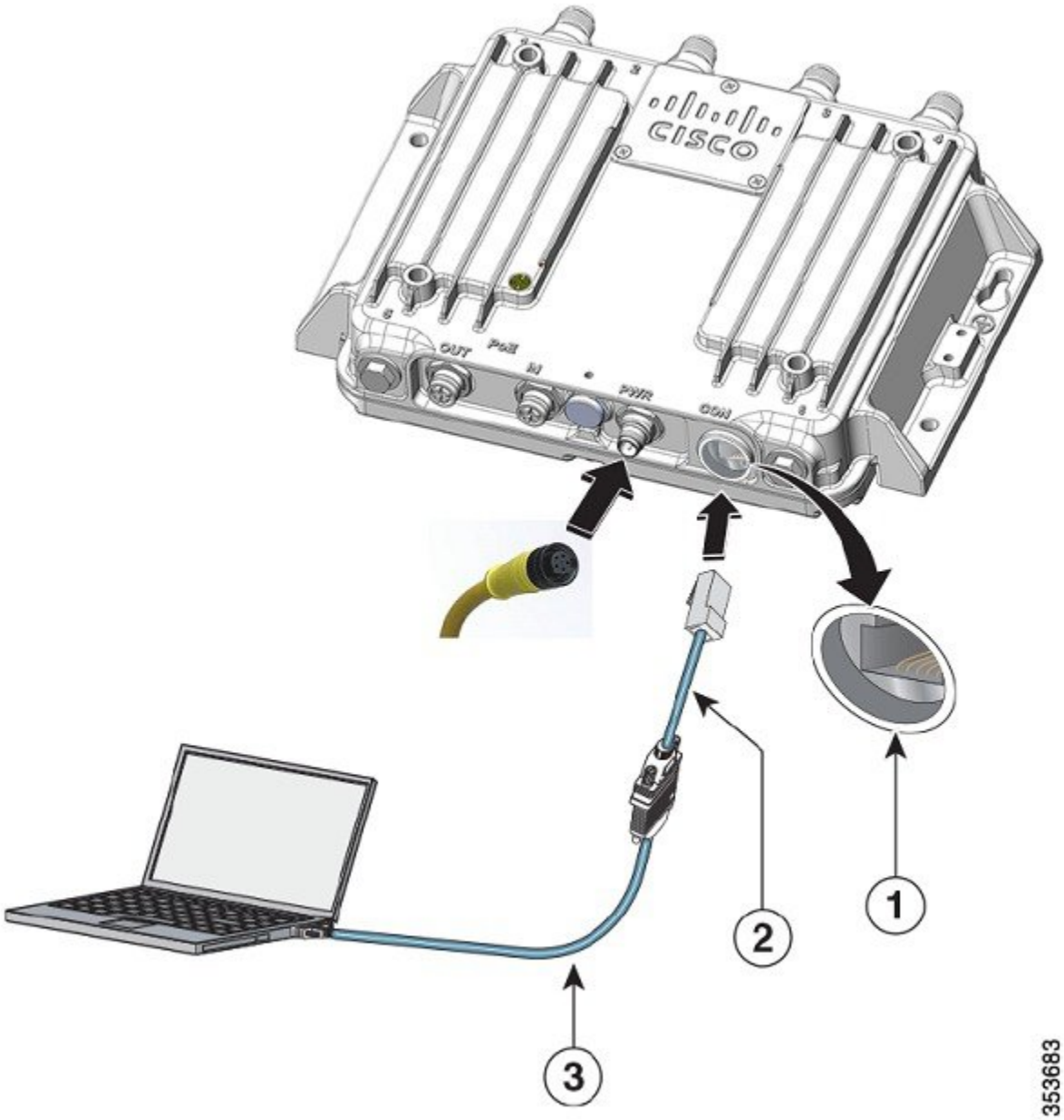

1	Console port
2	RJ-45-to-DB-9 adapter cable
3	USB-to-DB-9 adapter cable

Step 4 Set up a terminal emulator (for example, puTTy or SSH) on your PC to communicate with the access point, using the following connection settings:

- 9600 baud
- 8 data bits
- No parity
- 1 stop bit
- No flow control

Step 5 When connected, press enter or type *en* to access the command prompt.

Entering *en* prompts you for a password, and then enters privileged exec mode. The default password is *Cisco* and is case-sensitive.

When you finish configuring the access point:

Step 6 Use a small flat-blade screwdriver to depress the tab on the RJ45 connector and disconnect the cable from the CON port.

Step 7 Replace the CON port cover.

Step 8 Use a 0.5 in. (13 mm) socket wrench to torque the CON port cover to 6-7 ft-lbs (8.13-9.49 N-m).

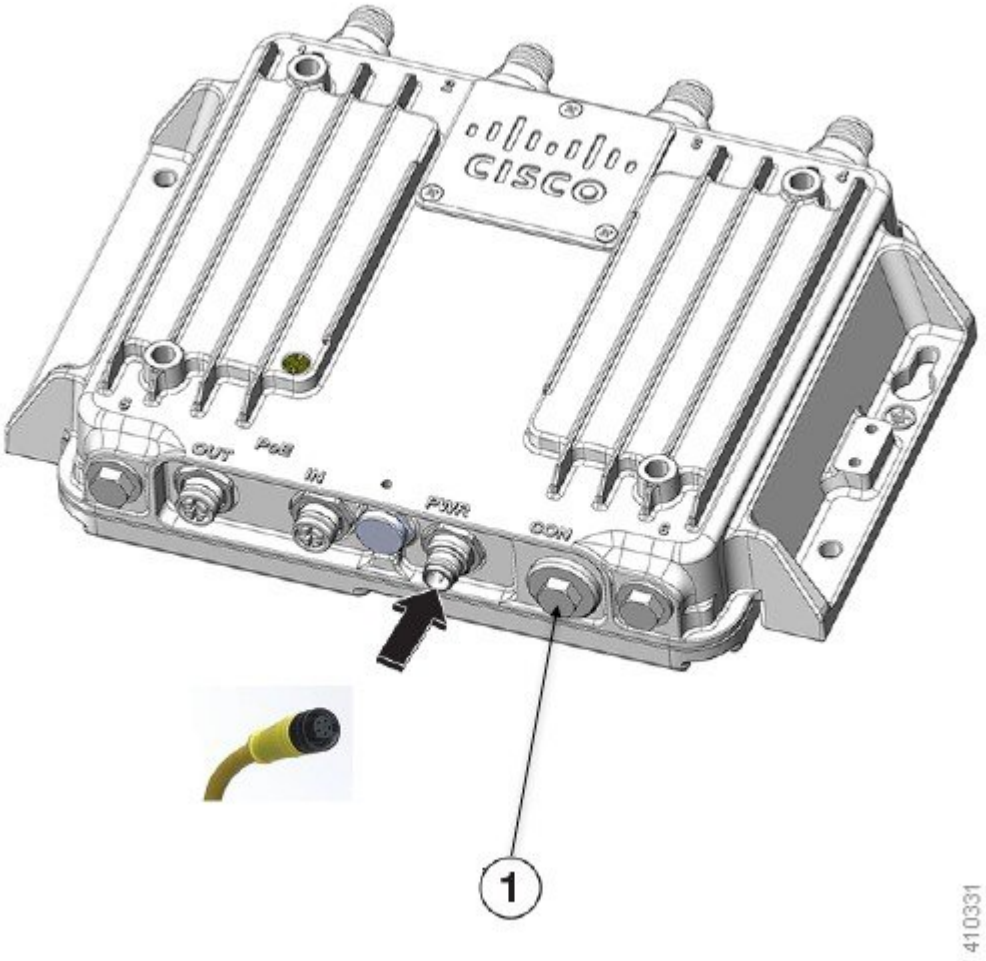

1	Console port cover

Setting Access Point Settings

Use the system management pages in the web browser interface to set the access point settings. For information on how to access the web browser interface, see Configuring the Access Point for Autonomous Operation, on page 46.

Use the system management pages to define configuration settings. A navigation bar appears on the left side of the page; the configuration action buttons appear at the bottom. Use the navigation bar to access the various management pages. Use the configuration action buttons to save or cancel setting changes.

Configuring the Access Point for Autonomous Operation

For information about configuring the access point for autonomous operations, see the Cisco IOS Configuration Guide for Autonomous Aironet Access Points.

Connecting the Access Point to a Wireless LAN Controller

This section describes how to connect the access point to a wireless LAN controller. Because the configuration process occurs on the controller, see the Cisco Wireless LAN Controller Configuration Guide for additional information.

The Controller Discovery Process

The access point uses standard Control and Provisioning of Wireless Access Points Protocol (CAPWAP) to communicate between the controller and other wireless access points on the network. CAPWAP is a standard, interoperable protocol that allows an access controller to manage a collection of wireless termination points. The discovery process using CAPWAP is identical to the Lightweight Access Point Protocol (LWAPP) used with Cisco IW3702 access points. LWAPP-enabled access points are compatible with CAPWAP, and conversion to a CAPWAP controller is seamless. Deployments can combine CAPWAP and LWAPP software on the controllers.

The functionality provided by the controller does not change, except for customers who have Layer 2 deployments, which CAPWAP does not support.

In a CAPWAP environment, the wireless access point discovers a controller by using CAPWAP discovery mechanisms and then sends it a CAPWAP join request. The controller sends the access point a CAPWAP join response to allow the access point to join the controller. When the access point joins the controller, the controller manages its configuration, firmware, control transactions, and data transactions.

For additional information about the discovery process and CAPWAP, see the Cisco Wireless LAN Controller Software Configuration Guide .

Note Refer to the Release Notes for the minimum required Cisco Wireless LAN Controller software release for the Cisco IW3702 access points.

- You cannot edit or query any access point using the controller CLI if the name of the access point contains a space.
- Ensure that the controller is set to the current time. If the controller is set to a time that has already occurred, the access point might not join the controller because its certificate may not yet be valid.

Access points must be discovered by a controller before they can become active in the network. The access point supports these controller discovery processes:

- Layer 3 CAPWAP discovery—Can occur on different subnets than the access point and uses IP addresses and UDP packets rather than MAC addresses used by Layer 2 discovery.
- Locally stored controller IP address discovery—If the access point was previously joined to a controller, the IP addresses of the primary, secondary, and tertiary controllers are stored in the access point's non-volatile memory. This process of storing controller IP addresses on an access point for later deployment is called *priming the access point* . See Performing a Pre-Installation Configuration, on page 47.
- DHCP server discovery—This feature uses DHCP option 43 to provide controller IP addresses to access points. Cisco switches support a DHCP server option that is typically used for this capability. See Configuring DHCP Option 43 and DHCP Option 60, on page 49.
- DNS discovery—The access point can discover controllers through your domain name server (DNS). To use this discovery method, you must configure the DNS to return controller IP addresses in response to **CISCO-CAPWAP-CONTROLLER.localdomain**, where *localdomain* is the access point domain name. Configuring the CISCO-CAPWAP-CONTROLLER provides backward compatibility in an existing deployment. When an access point receives the IP address and DNS information from a DHCP server, it contacts the DNS to resolve CISCO-CAPWAP-CONTROLLER.localdomain. When the DNS sends a list of controller IP addresses, the access point sends discovery requests to the controllers.

Performing a Pre-Installation Configuration

The following procedures ensure a successful access point installation and initial operational setup. Pre-installation configuration – priming the access point – is optional.

Note If your network controller already properly configured, you can skip priming and simply install your access point in its final location and connect it to the network. See Deploying in a Wireless Network, on page 51.

The following figure shows the pre-installation configuration setup.

Figure 9: Pre-Installation Configuration Setup

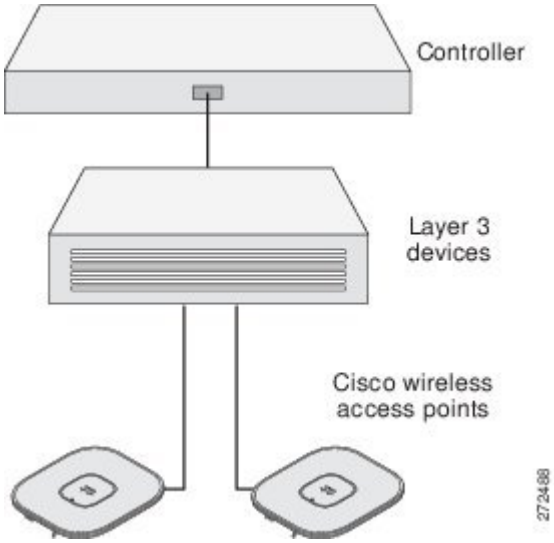

To prime the access point:

Procedure

Step 1 Ensure that the Cisco Wireless LAN Controller Management DS Port is connected to the network. Use the CLI, browser-based interface, or Cisco WCS procedures described in the appropriate Cisco Wireless LAN Controller guide to perform the following:

a) Ensure that the access points have Layer 3 connectivity to the Cisco Wireless LAN Controller Management and AP-Manager Interface.

b) Configure the switch to which your access point is to attach. See the appropriate Cisco Wireless LAN Controller guide.

c) Set the Cisco Wireless LAN Controller as the *master* so that new access points always join with it.

d) Ensure that DHCP is enabled on the network.

Note The access point must receive its IP address through DHCP.

e) Ensure that no CAPWAP UDP ports are blocked in the network.

f) Use a DHCP, DNS, or IP subnet broadcast to ensure that the access point finds the IP address of the controller.

This guide describes the DHCP method to convey the controller IP address. For other methods, refer to product documentation. See also Using DHCP Option 43, on page 49.

Step 2 Apply power to the access point:

The access point is IEEE 802.3at (30 W) compliant and can be powered by a third-party DC power supply that you provide. The Cisco power injector option is AIR-PWRINJ1500-2=.

Note
- The access point downgrades to 3x3 when connected to a 15.4W power supply. For maximum operating efficiency, use an IEEE 802.3at compliant PoE switch or AIR-PWRINJ1500-2= power injector.
- To prevent Ethernet port bottlenecks due to wireless traffic speeds exceeding 10/100 Ethernet port transmit speeds, the Cisco IW3702 access point requires a Gigabit Ethernet link.

As the access point attempts to connect to the controller, the LEDs cycle through a green-red-amber sequence, which can take up to 5 minutes.

Note
- If this connection takes longer than five minutes, the access point cannot find the *master* Cisco Wireless LAN Controller. Check the connection, and ensure that both are on the same subnet.
- To prevent Ethernet port bottlenecks due to wireless traffic speeds exceeding 10/100 Ethernet port transmit speeds, the Cisco IW3702 access point requires a Gigabit Ethernet link.
- If the access point shuts down, check the power source.

After a successful connection, the access point compares operating system code versions with the Cisco Wireless LAN Controller. If versions differ, it downloads the newest version. The Status LED blinks dark blue during this process. On a successful download, the access point reboots.

Step 3 (Optional) Configure the access point.

Use the controller CLI, controller GUI, or Cisco Prime Infrastructure to customize access-point-specific IEEE 802.11ac network settings.

On successful access point priming, the Status LED is green indicating normal operation.

Step 4 Disconnect the access point and mount it in location.

Notes:	• If the access point LEDs do not indicate normal operation, turn it off and repeat the access point priming procedure (see Performing a Pre-Installation Configuration, on page 47).
	• When installing a Layer 3 access point on a different subnet than the Cisco Wireless LAN Controller, ensure that:
	  • a DHCP server is reachable from the subnet on which you are installing the access point and that subnet has a return route to the Cisco Wireless LAN Controller.
	  • the return route to the Cisco Wireless LAN Controller has destination UDP ports 5246 and 5247 open for CAPWAP communications.
	  • the return route to the primary, secondary, and tertiary Cisco Wireless LAN Controllers allows IP packet fragments.
	  • if using address translation, the access point and the Cisco Wireless LAN Controller have a static 1-to-1 NAT to an outside address. (Port address translation is not supported.)

Using DHCP Option 43

You can use DHCP Option 43 to provide a list of controller IP addresses to the access points, enabling them to find and join a controller. For additional information, refer to Configuring DHCP Option 43 and DHCP Option 60, on page 49.

Configuring DHCP Option 43 and DHCP Option 60

This section contains a DHCP Option 43 configuration example on a Windows 2003 Enterprise DHCP server for use with Cisco wireless access points. For other DHCP server implementations, consult the product documentation for configuring DHCP Option 43.

With DHCP Option 43, use the IP address of the controller management interface.

Notes:	• DHCP Option 43 is limited to one access point type per DHCP pool. You must configure a separate DHCP pool for each access point type.
	• DHCP servers must be programmed to return the option based on the DHCP Vendor Class Identifier (VCI) string of the access point (DHCP Option 60). The VCI string for the access point is:
	`Cisco AP iw3702`
	If you ordered an access point with the Service Provider Option (AIR-OPT60-DHCP) selected in the ordering tool, the VCI string for the access point contains **-ServiceProvider**. For example, an access point with this option returns this VCI string:
	`Cisco AP iw3702-ServiceProvider`

The Cisco IW3702 access point uses the type-length-value (TLV) format for DHCP Option 43. The TLV block format is:

- Type: 0xf1 (decimal 241)
- Length: Number of controller IP addresses * 4
- Value: List of Cisco Wireless LAN Controller management interfaces

To configure DHCP Option 43 in the embedded Cisco IOS DHCP server:

Procedure

Step 1 Enter configuration mode at the Cisco IOS CLI.

Step 2 Create the DHCP pool, including the necessary parameters such as default router and name server.

Example DHCP scope commands:

Example:

```
ip dhcp pool pool_name
network IP_network netmask
default-router default_router
dns-server DNS_Server
```

where,

- *pool_name* is the name of the DHCP pool (for example, AP3702).
- *IP_network* is the network IP address where the controller resides (for example, 10.0.15.1).
- *netmask* is the subnet mask (for example, 255.255.255.0).
- *default_router* is the IP address of the default router (for example,10.0.0.1).
- *DNS_Server* is the IP address of the DNS server (for example, 10.0.10.2).

Step 3 Add the option 60 line using the following syntax:

Example:

```
option 60 ascii VCI_string
```

where,

- *VCI_string* = “Cisco AP iw3702”

Note You must include the quotation marks.

Step 4 Add the option 43 line using the following syntax:

Example:

```
option 43 hex <hex_string>
```

The hex string is assembled by concatenating the TLV values: Type + Length + Value

where,

- *Type* is always f1(hex).
- *Length* is the number of controller management IP addresses times 4 in hex.
- *Value* is the IP address of the controller listed sequentially in hex.

TLV Example

For two controllers with management interface IP addresses 10.126.126.2 and 10.127.127.2

- Type is f1(hex)

- Length is 2 * 4 = 8 = 08 (hex)

The resultant IP addresses translate to 0a7e7e02 and 0a7f7f02. Assembling the string yields f1080a7e7e020a7f7f02.

The resulting Cisco IOS command added to the DHCP scope is option 43 hex f1080a7e7e020a7f7f02.

Deploying in a Wireless Network

To deploy the access point in a wireless network:

Procedure

Step 1 Connect and power up the access point.

Step 2 Observe the Status LED (see Status LED, on page 8).

On successful power-up, the discovery and join process begins. During this process, the Status LED blinks green-red-off.

On a successful join, the Status LED is green when no clients are associated, or blue when one or more clients are associated.

Note
- If the Status LED is not on, the access point may not have power.
- If the Status LED blinks green-red-off longer than 5 minutes, it cannot find its primary, secondary, and tertiary Cisco Wireless LAN Controller. Check the connection, and ensure that both are on the same subnet or that the access point has a return route to its primary, secondary, and tertiary Cisco Wireless LAN Controller.
- If the access point is not on the same subnet as the Cisco Wireless LAN Controller, ensure that there is a properly configured DHCP server on the same subnet. See Configuring DHCP Option 43 and DHCP Option 60, on page 49.

Step 3 Reconfigure the Cisco Wireless LAN Controller so that it is not the *master* .

Configuring PoE Out Function

You can configure the PoE-Out port power function in autonomous mode for by using the following CLIs:

- To disable the PSE function, use the power out-never command.
- To turn on the PoE out function, use the no power out-never command.

```
ap(config)# power [inline | out-never]
  inline     Inline power configuration
  out-never  Never apply PoE out power
```

Note This command will not be effective if the AP is powered only by PoE/PoE+.

Connecting Ethernet Daisy Chain

The Ethernet daisy chain feature is available on IW3702 autonomous mode.

IW3702 has two Ethernet ports: POE-IN (Gig0) and POE-OUT (Gig1). You can connect several IW3702 access points in daisy chain via Ethernet cables.

Note Make sure that you use 4-pair cables which support 1000 Mbps. This feature cannot work properly with 2-pair cables which support 100 Mbps.

For the speed and duplex settings on the Ethernet port of the access point, it is recommended that you configure **auto** for both, which is the default setting.

In daisy chain topology, each IW3702 can be powered either by DC input (through PWR connector) or POE inline (through POE IN port), but not both. To avoid inadvertently powering by dual sources, when connecting IW3702 to a device capable of PoE power sourcing (PSE, including another IW3702), see the following requirements:

- Connection between two IW3702 access points:
  - POE-IN to POE-IN connection
  - POE-OUT to POE-OUT connection
- Connection between other PSE (POE source) and IW3702:
  - Connect PSE to the POE-OUT port of IW3702
  - Connect non-PSE device to the POE-IN port of IW3702

Daisy Chain Connection Topologies

You can use the following connections for daisy chain topology:

- Both IW3702-1 and IW3702-2 are powered by DC power source, with POE-IN to POE-IN connection between IW3702s. Make sure to configure **power out-never** on each IW3702 to disable the POE-OUT function.

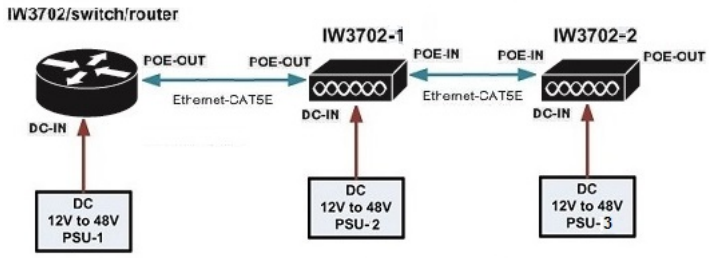

- Both IW3702-1 and IW3702-2 are powered by DC power source, with POE-OUT to POE-OUT connection between IW3702s. Make sure to configure **power out-never** on each IW3702 to disable the POE-OUT function.

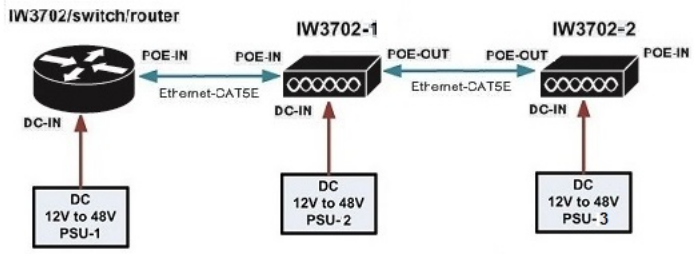

- IW3702-1 is powered by DC power source, and IW3702-2 has no DC input. IW3702-2 can be powered on only when the POE-OUT port of IW3702-1 connects to the POE-IN port of IW3702.

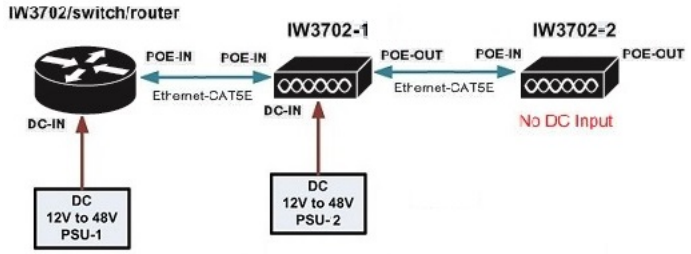

RAP Ethernet Daisy Chain on IW3702

The RAP Ethernet Daisy Chain feature is supported on Cisco Wireless LAN Controller Release 8.10.105.0.

In the daisy chain topology, if the link between RAP1 and RAP2 is broken, or RAP1 loses CAPWAP connectivity to the controller or switch, RAP2 will change its backhaul to wireless link. The Ethernet interfaces of RAP2 will be blocked and no child mesh AP will be allowed. Then, RAP3 and RAP4 will lose connection if they are far away from RAP1.

For the access point joining over wireless backhaul, it stays on wireless backhaul for 15 minutes and comes back to scan state every 15 minutes, until it finds a wired backhaul and joins the controller.

If the link between RAP1 and RAP2 is recovered, it takes up to 15 minutes for RAP2 to detect it and change back to Ethernet backhaul. Similarly, RAP3 and RAP4 will take additional time (maximum of 15 minutes at each hop) if they have joined over wireless backhaul.

Figure 10: Ethernet Daisy Chain Topology

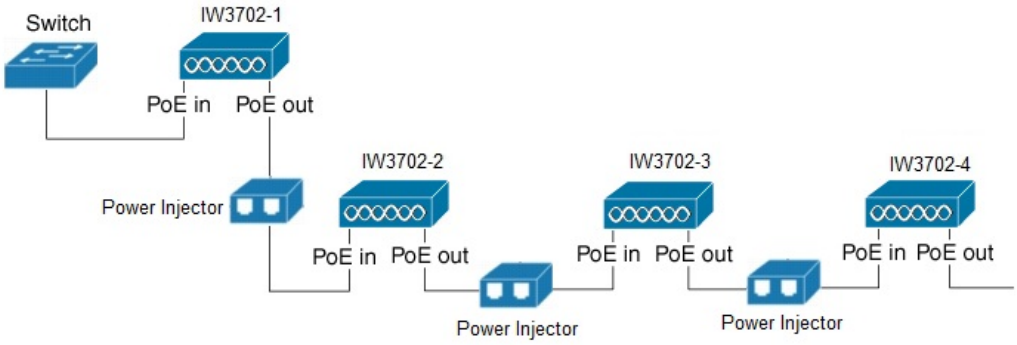

The RAP Ethernet Daisy Chain feature enhances the existing Ethernet bridging functionality by introducing a new command to configure strict wired uplink on each access point. It forces the bridge AP to stick to the Ethernet link, and block the selecting of

wireless link for uplink backhaul. Even the Ethernet link failure happens, the access point will never select a parent over wireless backhaul.

Note To support this Ethernet daisy chain topology, you MUST use power injector as the power supply for the access point. Supported power injectors are: AIR-PWRINJ1500-2=, AIR-PWRINJ-60RGD1=, and AIR-PWRINJ-60RGD2=.

If there is a CAPWAP loss on the first access point (RAP1) connected to switch, the entire chain will lose uplink. It takes about 15 seconds for each access point to recovery the CAPWAP connection after the upstream RAP1 is recovered. The last RAP in N hop chain takes maximum 15xN seconds to recover the connection.

You can configure strict wired uplink only if the AP is configured as Bridge or Flex Bridge mode, Root AP role, and connected to WLC using wired connection. If it connects to WLC using radio link, the configuration is not allowed.

Note After the configuration, the AP may be in MAP role. It is required to prime all AP to RAP role before connecting all of them with the wired connection. Otherwise there may be loop issues if MAP uses wireless backhaul to connect to the other AP.

WLC Configuration for RAP Ethernet Daisy Chain

Procedure

Step 1 Configure the AP in bridge/flex bridge mode.

CLI: `config ap mode [bridge|flex+bridge]{submode none} <Cisco_AP>`

GUI: wireless -> All APs -> Details (General) page -> AP mode

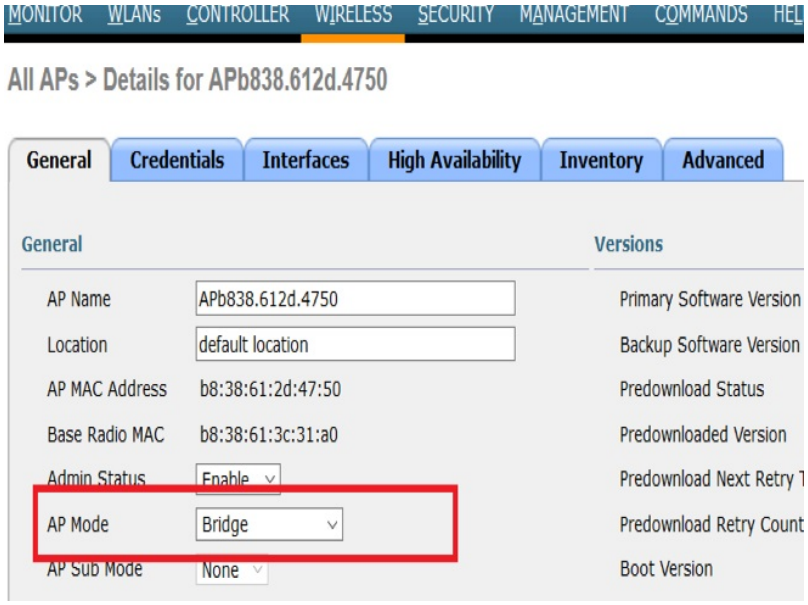

Note Before changing the mode to the bridge/flex bridge, make sure that the AP's MAC is added in MAC filter list of WLC. Otherwise the bridge mode AP will not be able to join the WLC.

For more details, refer to:
https://www.cisco.com/c/en/us/td/docs/wireless/controller/technotes/8-7/b_mesh_87/b_mesh_87_chapter_0110.html#ID4755

Step 2 Change the AP role to Root.

CLI: `config ap role {rootAP|meshAP} <Cisco_AP>`

GUI: Wireless -> All APs -> Details (Mesh) page -> AP role

Step 3 Enable Ethernet interface 1 for all the APs from the controller.

CLI:`config ap lan port-id 1 enable <Cisco_AP>`

Step 4 Configure Ethernet bridging.

Ethernet bridging must be enabled on all APs in the Bridge mode.

CLI:`config ap bridging enable <Cisco_AP>`

GUI: Wireless > Access Point > (AP_NAME) > Mesh, and then check the Ethernet bridging check box

For more details, refer to the Connecting the Cisco 1500 Series Mesh Access Points to the Network chapter of the *Cisco Wireless Mesh Access Points, Design and Deployment Guide*.

Step 5 Configure Strict Wired Uplink

Use the following command to enabled or disable strict wired uplink on a specific AP:

CLI:

```
config ap strict-wired-uplink {enable|disable} <Cisco_AP>
```

Step 6 (Optional) For Multiple VLAN deployment, follow step 6 to 8.

Disable VLAN transparency from the controller.

CLI: `config mesh ethernet-bridging vlan-transparent {enable|disable}`

GUI: Wireless--> Mesh ---> Ethernet Bridging

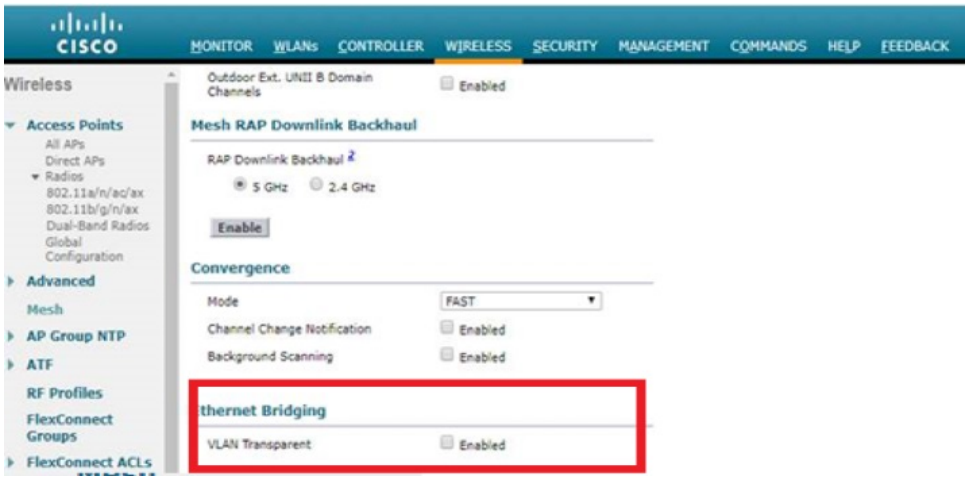

Step 7 If Multiple VLANs are used with one native VLAN and other as allowed VLAN, verify VLAN support is enabled in each RAP.

CLI:

- `config ap vlan-trunking enable <ap-name>`
- `config ap vlan-trunking native <native vlan-id> <ap-name>`

GUI:

- Wireless --> AP --> Mesh --> VLAN support
- Wireless --> AP --> Mesh --> Native VLAN ID

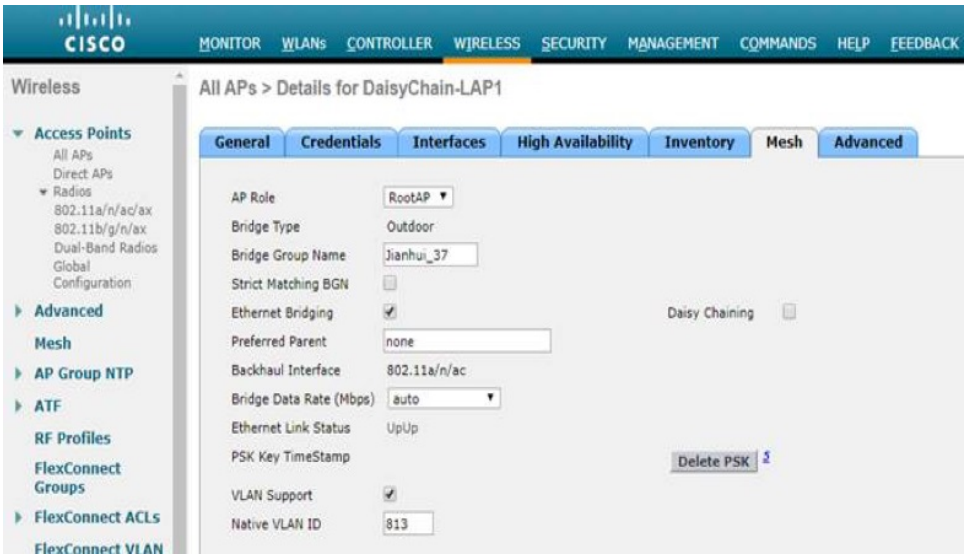

Step 8 Configure the Ethernet interface of each RAP with native VLAN and add the other allowed VLAN.

CLI:

- **config ap ethernet** *<intf-num>* **mode trunk enable** *<ap-name>* **native-vlan** *<vlan-Id>*
- **config ap ethernet** *<intf-num>* **mode trunk** {**add**|**delete**} *<ap-name>* *<vlan-Id>*

GUI:

- Wireless --> AP --> Mesh --> Ethernet Interface 0/1

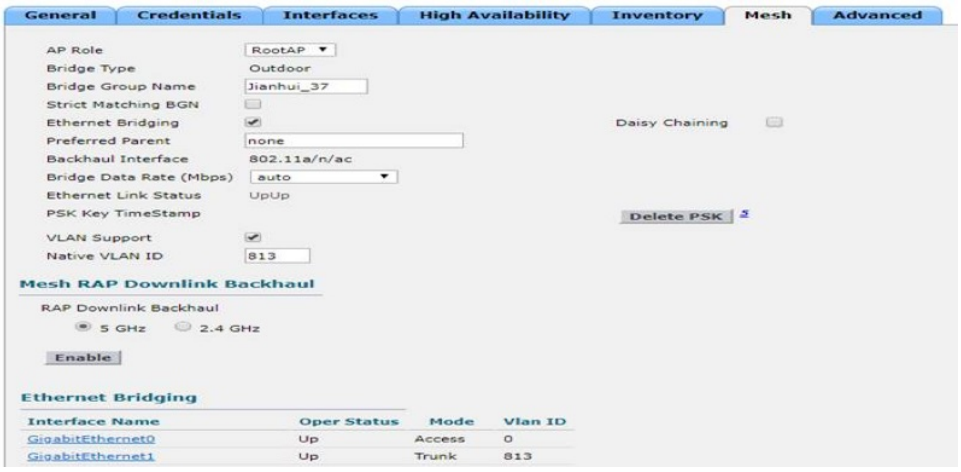

- Add/Delete Allowed VLAN

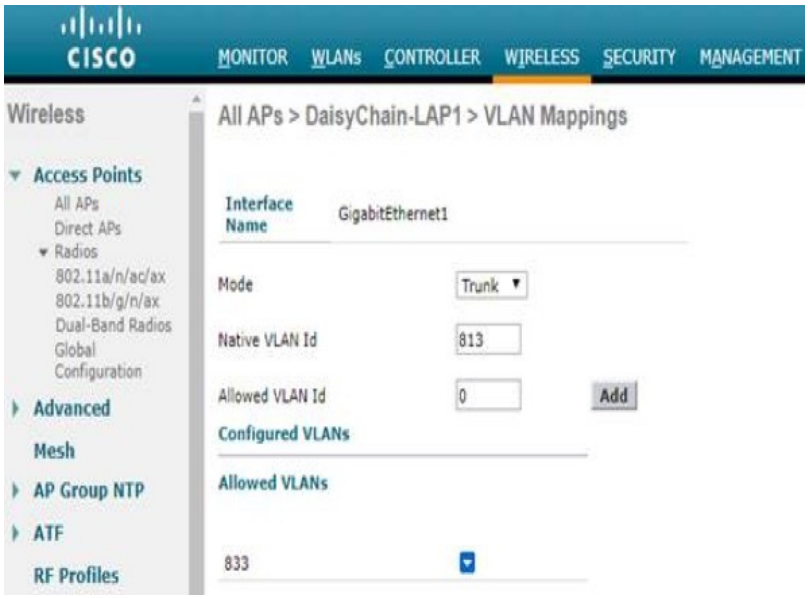

Verifying the Configuration

Use the following command to display the feature state for AP:

```
(Cisco Controller) >show ap config general <Cisco_AP>
AP Mode ........................................ Bridge
AP Role ........................................ RootAP
Ethernet Bridging .............................. Enabled
Strict Wired Uplink ............................ Enabled
```

Use the following command to ensure whether the admin status and line protocol of the Ethernet interfaces 0/1 are up.

```
AP#show interfaces gigabitEthernet 0
GigabitEthernet0 is up, line protocol is up
  Hardware is PowerPC Ethernet, address is 2cd0.2de8.ab80 (bia 2cd0.2de8.ab80)
  MTU 1500 bytes, BW 1000000 Kbit/sec, DLY 10 usec,
     reliability 255/255, txload 1/255, rxload 1/255
  Encapsulation 802.1Q Virtual LAN, Vlan ID  1., loopback not set
  Keepalive set (10 sec)
  Full Duplex, 1Gbps, media type is T
  output flow-control is unsupported, input flow-control is unsupported
  ARP type: ARPA, ARP Timeout 04:00:00
  Last input 00:00:00, output never, output hang never
  Last clearing of "show interface" counters never
  Input queue: 2/42878/649/0 (size/max/drops/flushes); Total output drops: 0
  Queueing strategy: fifo
```

WLC GUI: Wireless --> AP --> Mesh --> Ethernet link Status

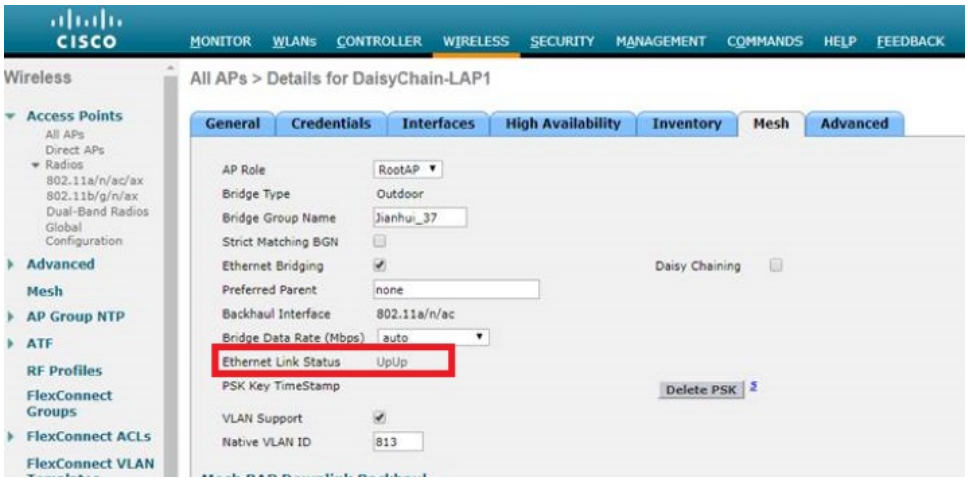

Use the following command to display the feature status for all bridge RAP:

```
(Cisco Controller) >show mesh strict-wired-uplink summary
AP Name      AP Model             BVI MAC          Role  Bridge Group Name   Strict Wired Uplink
--------  -------------------  -----------------   ----  -----------------  --------------------
IW1       IW3702-2E-A-K9       00:a2:ee:59:4b:c0   RAP   Qia_37             Enable
IW37-3    IW3702-4E-A-K9       2c:d0:2d:e8:ab:80   RAP   Qia_37             Enable

Number of Mesh RAP Strict Wired Uplink Set....... 2
```

Use the following command to display strict wired uplink status on the access point:

```
Daisychain-AP#show mesh status
 show MESH Status
 RootAP in state Maint
 Uplink Backbone: GigabitEthernet0,  hw GigabitEthernet0
 Configured BGN: DSAP3702, Extended mode 0
 Children: Accept child
 No.of Children: 0
 Strict Wired Uplink: Enable
```

Configuration Guidelines

Note To make sure this feature works properly, the power injector MUST be used as power supply for the AP.

- Ethernet bridging on all RAPs in the chain should be enabled and secondary Ethernet interfaces needs to be configured according to the mesh deployment guidelines.
- Strict wired uplink configuration needs to be done on each AP in order to enable this feature.
- Strict wired uplink configuration is supported only on IOS-based IW3702 Access Points and applicable only when the AP is operating in Bridge or Flex Bridge mode in Root AP role.
- For Flex bridge mode, if it is local switching WLAN, WGB multiple VLAN is not supported.
- If this feature is enabled, the AP will keep scanning until at least one Ethernet adjacency is found. The Ethernet link will not be added to blacklist and continue being used as backhaul.

- All the traffic will go through the RAP1 which is a bottleneck and the total network throughput is limited. There should be around 10% bandwidth reserved for CAPWAP management traffic in high traffic load case.
- Make sure that you use 4-pair cables which support 1000 Mbps. This feature cannot work properly with 2-pair cables which support 100 Mbps.
- Follow the Ethernet chaining guideline in the Connecting Ethernet Daisy Chain, on page 52 section to establish cable connections.
- Connecting one IW3702's G0 interface to another IW3702's G1 interface directly may cause issues in the AP's POE function and may damage the AP. To support this feature, the power injector MUST be used as power supply for the AP.

Deployment Option 1

Procedure

Step 1 Connect the mesh AP to WLC through wired connection.

Step 2 Prime all APs to RAP role on the daisy chain topology.

Step 3 Configure **config ap bridging enable** <*Cisco_AP*> to enable Ethernet bridging. This command allows the next AP to connect on its Secondary Ethernet interface.

Step 4 Configure **config ap strict-wired-uplink enable** <*Cisco_AP*> to enable the feature. At this time, the AP can only connect to WLC through a wired connection.

Step 5 Connect all APs using wired daisy chain topology.

Deployment Option 2

Procedure

Step 1 Connect all the APs using wired daisy chain topology. Make sure all APs are powered off.

Step 2 Power on the first AP which is closest to the switch or WLC. Make sure it can connect to WLC through a wired connection.

Step 3 Set the AP role to RAP.

Step 4 Configure **config ap bridging enable** <*Cisco_AP*> to enable Ethernet bridging. This command allows the next AP to connect on its Secondary Ethernet interface.

Step 5 Configure **config ap strict-wired-uplink enable** <*Cisco_AP*> to enable the feature. At this time, the AP can only connect to WLC through a wired connection.

Step 6 Power on the AP which is next to the previous AP.

Step 7 Repeat Step3 to Step 5.

Troubleshoot Guidelines

Debug to be enabled on AP:

1. **debug capwap client event**
2. **debug capwap client payload**—To ensure that strict-wired-uplink config payload from WLC to AP

3. **debug mesh ethernet bridging**—Debugs Ethernet bridging

Show commands on AP:

```
#show interfaces gigabitEthernet 0
GigabitEthernet0 is up, line protocol is up
  Hardware is PowerPC Ethernet, address is 2cd0.2de8.ab80 (bia 2cd0.2de8.ab80)
  MTU 1500 bytes, BW 1000000 Kbit/sec, DLY 10 usec,
     reliability 255/255, txload 1/255, rxload 1/255
  Encapsulation 802.1Q Virtual LAN, Vlan ID  1., loopback not set
  Keepalive set (10 sec)
  Full Duplex, 1Gbps, media type is T
  output flow-control is unsupported, input flow-control is unsupported
  ARP type: ARPA, ARP Timeout 04:00:00
  Last input 00:00:00, output never, output hang never
  Last clearing of "show interface" counters never
  Input queue: 2/42878/649/0 (size/max/drops/flushes); Total output drops: 0
  Queueing strategy: fifo
  Output queue: 0/40 (size/max)
  5 minute input rate 1000 bits/sec, 2 packets/sec
  5 minute output rate 7000 bits/sec, 3 packets/sec
     3382115 packets input, 390507998 bytes, 0 no buffer
     Received 1812139 broadcasts (0 IP multicasts)
     0 runts, 0 giants, 0 throttles
     0 input errors, 0 CRC, 0 frame, 0 overrun, 0 ignored
     0 watchdog, 0 multicast, 0 pause input
     4807536 packets output, 1258122159 bytes, 0 underruns
     0 output errors, 0 collisions, 4 interface resets
     0 unknown protocol drops
     0 babbles, 0 late collision, 0 deferred
     0 lost carrier, 0 no carrier, 0 pause output
     0 output buffer failures, 0 output buffers swapped out

#show capwap client rcb
AdminState                  :  ADMIN_ENABLED
Primary SwVer               :  8.10.118.37
Backup  SwVer               :  0.0.0.0
NumFilledSlots              :  2
Name                        :  AP00ee.abe3.6240
Location                    :  default location
MwarName                    :  Cisco-cc70.ed03.d3b2
MwarApMgrIp                 :  10.100.60.150
MwarHwVer                   :  0.0.0.0
ApMode                  :  Bridge
ApSubMode                   :  Not Configured
OperationState              :  UP
CAPWAP Path MTU             :  1485
Link-Encryption (AP)        :  Disabled
Link-Encryption (MWAR)      :  Enabled
Prefer-mode                 :  IPv4
LinkAuditing                :  disabled
ApRole                  :  RootAP
ApBackhaul                  :  802.11a
ApBackhaulChannel           :  0
ApBackhaulSlot              :  3
ApBackhaul11gEnabled        :  0
ApBackhaulTxRate            :  0
Ethernet Bridging State     :  1
Daisy Chaining State        :  Enabled
Public Safety State         :  disabled
AP Rogue Detection Mode     :  Enabled
AP Tcp MSS Adjust           :  Enabled
AP Tcp MSS size             :  1250
```

```
Predownload Status          :  None
Auto Immune Status          :  Disabled
RA Guard Status             :  Enabled
Efficient Upgrade State     :  Disabled
Efficient Upgrade Role      :  None
Antenna Band Mode           :  Dual Band
Universal AP Priming mode   :  Unprimed
802.11bg(0) Radio
ADMIN  State = DISABLE [2]
OPER   State =    DOWN [1]
CONFIG State =    DOWN [1]
HW     State =    DOWN [6]
Radio Mode                : Bridge
GPR Period                : 10
Beacon Period             : 100
DTIM Period               : 0
World Mode                : 1
VoceraFix                 : 0
Dfs peakdetect            : 0
Fragmentation Threshold   : 2346
Current Tx Power Level    : 1
Current Channel           : 1
Current Bandwidth         : 20
802.11a(1) Radio
ADMIN  State =  ENABLE [1]
OPER   State =      UP [2]
CONFIG State =      UP [2]
HW     State =      UP [4]
Radio Mode                : Bridge
GPR Period                : 10
Beacon Period             : 100
DTIM Period               : 0
World Mode                : 1
VoceraFix                 : 0
Dfs peakdetect            : 1
Fragmentation Threshold   : 2346
Current Tx Power Level    : 1
Current Channel           : 36
Current Bandwidth         : 20
Nexthop MAC Address         :  cc70.ed03.d3b8
HYPERLOCATION ADMIN STATE      : 0
WLC GATEWAY MAC               : 00:00:00:00:00:00
WLC HYPERLOCATION SRC PORT    : 0
Remote Machine's IP  : 0.0.0.0
```

#**show mesh status**

```
 RootAP in state Scan
No active links
 Configured BGN: , Extended mode 0
 Children: Not accept child
 No.of Children: 0
        rxNeighReq 0 rxNeighRsp 0 txNeighReq 0 txNeighRsp 0
        rxNeighRsp 211 txNeighUpd 0
        nextchan 0 nextant 0 downAnt 0 downChan 0 curAnts 0
        nextNeigh 0, malformedNeighPackets 0,poorNeighSnr 0
        excludedPackets 0,insufficientMemory 0, authenticationFailures 0
        Parent Changes 0, Neighbor Timeouts 0
        Auto Parent Switch 0

        Authentication Failure statistics
        Child MAC                 No.Of PSK Failures
Preferred Parent 0000.0000.0000
Block Child Status: Disable
Strict Wired Uplink: Disable
```

```
show mesh module adjacency
show mesh ethernet vlan config running

#show mesh module mesh-control
mesh lwapp module
skip cleanup: Not set
join timer: Set
boot timer: Set
capwap dhcp: Set
standalone: Not set
was standalone: Not set
abort standalone: Not set
joined once: Set

Mesh Capwap State: JOINED-UP

Lwapp link 00ee.abe3.6241

#show mesh forwarding interfaces
  GigabitEthernet0: GigabitEthernet0(state is OPEN)
  GigabitEthernet1: GigabitEthernet1(state is OPEN)
      Node 00ee.abe3.6241
  GigabitEthernet2: GigabitEthernet2(state is OPEN)
  GigabitEthernet3: GigabitEthernet3(state is OPEN)
  GigabitEthernet4: GigabitEthernet4(state is OPEN)

#show mesh ethernet vlan config running
 Running Ethernet VLAN Configuration

Ethernet Interface: 0  mode: TRUNK Native Vlan: 1
 Vlans: 4095
Ethernet Interface: 1  mode: TRUNK Native Vlan: 1
 Vlans: 4095
Ethernet Interface: 2  mode: TRUNK Native Vlan: 1
 Vlans: 4095
Ethernet Interface: 3  mode: TRUNK Native Vlan: 1
 Vlans: 4095
Ethernet Interface: 4  mode: TRUNK Native Vlan: 1
 Vlans: 4095

VLAN - root hwidb:GigabitEthernet1 global BVI:NULL

          VlanID   BrgGrp   Type    Routed   Active
        ---------------------------------------------


GigabitEthernet0 enabled: 1, active: 0, etherbridge 1, line-p: 0, state-up: 1
GigabitEthernet1 enabled: 1, active: 0, etherbridge 1, line-p: 1, state-up: 1
GigabitEthernet2 enabled: 1, active: 0, etherbridge 1, line-p: 0, state-up: 1
GigabitEthernet3 enabled: 1, active: 0, etherbridge 1, line-p: 0, state-up: 1
GigabitEthernet4 enabled: 1, active: 0, etherbridge 1, line-p: 0, state-up: 1
```

For more details on troubleshoot, refer to:
https://www.cisco.com/c/en/us/td/docs/wireless/controller/8-3/config-guide/b_cg83/troubleshooting_mesh_access_points.html#ID9205

Configuring Indoor Support for Q Domain Models

Both indoor and outdoor use are supported for IW3702 Q domain models, for unified mode and autonomous mode. By default, outdoor mode is enable, and channel 36-64 are disabled. After enabling indoor support on the access point, channel 36-64 will be open for indoor use.

Note After factory reset, the indoor mode will be changed back to default outdoor mode.

Enabling Indoor Support for Unified Mode AP

In WLC, use the following command to configure IW3702 in unified mode for indoor support:

```
(Cisco Controller)> config ap indoor {enable|disable} <AP-Name>
```

Example:

```
(Cisco Controller)> config ap indoor enable AP3
Changing the AP's indoor mode will cause the AP to reboot.
Are you sure you want to continue? (y/n) y
```

Use the following command to check the current mode of AP:

```
show ap env <AP-Name>
```

Example:

```
show ap env AP3
AP Name..................................... AP3
AP Model.................................... IW3702-4E-Q-K9
AP Role..................................... Normal

Temperature................................. N/A
Backhaul.................................... N/A
Indoor Mode................................. True

GigabitEthernet0 Status..................... UP
    Duplex.................................. FULL
    Speed................................... 1000
    Rx Unicast Packets...................... 13148
    Rx Non-Unicast Packets.................. 72406
    Tx Unicast Packets...................... 18423
    Tx Non-Unicast Packets.................. 4420
GigabitEthernet1 Status..................... DOWN

Battery..................................... N/A
```

Enabling Indoor Support for Autonomous Mode AP

Use the following command to configure indoor support for autonomous AP:

```
ap(config)# dot11 indoor {enable|disable}
```

Example:

```
ap(config)# dot11 indoor enable
Enable AP indoor support in the "Q" Regulatory Domain.
WARNING: The configed AP will reboot.

Begin to enable AP indoor support. Do you want to Continue ? (yes/[no]): yes
```

Use the following command to display the current status of indoor support:

```
show dot11 indoor
```

Configuring Heaters

There are two heaters for each IW3702 access point. By default, they are enabled and will start to work when the environment tempreature is under -20°C. If you determine that the environment tempreature where the IW3702 is deployed will never be under -20°C, you can turn off the heaters, which allows the IW3702 to request less power from the switch when the IW3702 is powered by PoE+.

Note You must be cautious to turn off the heaters. If the temperature is under -20°C while the heaters are turned off, IW3702 will not work properly, which might cause damage to the AP.

Note Two heaters will be disabled or enabled together.

Use the following command to enable or disable the heaters:

```
(config)#heater {disable|enable}
  disable Disable AP heater
  enable  Enable AP heater
```

Note By default, the heaters are enabled. The execution of the heater enable or disable command will trigger the AP reload.

- If the heaters are disabled, AP requests maximum power of 21w. The heaters will never start to work even the environment tempreature is under -20°C.
- If the heaters are enabled, AP requests maximum power of 30w. The heaters will be turned on automatically when the environment tempreature is under -20°C.

Use the following command to display the current status of the heaters:

```
#show heater_status
MCU Firmware Version = 7
Heater1 - OFF, Heater2 - OFF
Heaters admin disabled
```

Technical Specifications

This section provides the following technical specifications for the access point:

Environmental and Operational Specifications

Table 21: Environmental and Operating Specifications for the Access Point

Description	Specification
Operating temperature	–40 to 158°F (–40 to +70°C) with solar load and still air

Description	Specification
Altitude	15,000 ft. (4.5 m)
Humidity	5 to 95% (non-condensing)
Extended operating temperature (DC power)	–58 to 167°F (–50 to +75°C) without solar loading, still air, and cold start limited to –40°C
Operating type test	185°F (85°C) for 16 hours
Storage temperature	–40 to 185°F (–40 to +85°C)
Vibration	Per IEEE 1613, IEC 61850, EN50155, and AREMA
Shock	Per IEEE 1613, IEC 61850, EN50155, and AREMA
Seismic	Per IEC 61850-3 Class 2

Power Specifications

Power Requirements

Table 22: Power Requirements for the Access Point

Power Input Type	Environment Condition/Heaters	Wi-Fi Radio Mode	PoE Out	Power Budget (Watts)
PoE 802.3af	> -20°C No heaters active	3x3:3 on 2.4/5 GHz	N/A	15.4
PoE+ 802.3at	> -20°C No heaters active	4x4:3 on 2.4/5 GHz	N/A	21
PoE+ 802.3at	-50°C to -20°C Still air 1 heater active	4x4:3 on 2.4/5 GHz	N/A	30
DC In	> -20°C No heaters active	4x4:3 on 2.4/5 GHz	No	20
DC In	-50°C to -20°C Still air 1 heater active	4x4:3 on 2.4/5 GHz	No	37
DC In	-50°C to -20°C Wind cooling 2 heaters active	4x4:3 on 2.4/5 GHz	No	53

Power Input Type	Environment Condition/Heaters	Wi-Fi Radio Mode	PoE Out	Power Budget (Watts)
DC In	> -20°C No heaters active	4x4:3 on 2.4/5 GHz	Yes	38
DC In	-50°C to -20°C Still air 1 heater active	4x4:3 on 2.4/5 GHz	Yes	55
DC In	-50°C to -20°C Wind cooling 2 heaters active	4x4:3 on 2.4/5 GHz	Yes	71

DC Input and PoE IN Specifications

The access point supports two power options:

- DC input from the PWR connector.
- PoE inline power from the PoE IN port.

Note The PoE OUT port is enabled only when the access point is powered over the PWR port. When powered over the PoE IN port, PoE OUT functionality is not supported.

In relation to powering the access point:

- Power can be supplied by the DC input (PWR port connection) or the PoE inline power (PoE IN port), but not both.
- We recommend not using the two power options at the same time, but no harm results if both are present.
- If both power inputs are present, the DC input (PWR port connection) takes precedence and PoE IN becomes idle and unused.
- Power supply redundancy is not supported.

Supported Power Adapters

The following table shows the power adapters supported for the Cisco IW3702 access point.

PID	Description
AIR-PWRADPT3700NA=	AC to DC power adapter, with North American plug
AIR-PWRADPT3700IN=	AC to DC power adapter, international version without AC plug

Supported PoE Power Injectors

The following power injectors are supported for the Cisco IW3702 access point:

- AIR-PWRINJ1500-2=: PoE+ power injector, for indoor environments

Note The power injector AIR-PWRINJ1500-2= is not IP rated for outdoors. Use it in an indoor environment only or put it in an NEMA enclosure. For more information, see Cisco Aironet Series Power Injector AIR-PWRINJ1500-2= Installation Instructions.

- AIR-PWRINJ-60RGD1=: PoE+ power injector, for outdoor environments, with North American plug
- AIR-PWRINJ-60RGD2=: PoE+ power injector, for outdoor environments, international version without AC plug

Note The power injectors AIR-PWRINJ-60RGD1= and AIR-PWRINJ-60RGD2= are IP66 rated. It does not meet all industrial specifications as supported by the IW3702. For more information, see Cisco Aironet Series Power Injectors AIR-PWRINJ-60RGD1= and AIR-PWRINJ-60RGD2= Installation Instructions.

The following table lists specifications for the available power inputs.

Table 23: Power Connections Specifications

Power INPUT	**WiFi 4 x 4 MIMO**	**GE-POE-OUT (POE PSE)**	**GE-POE-OUT (10/100/1000)**	**Operating Temperature Range**[4]	**Wire Thickness, Min Rating**	**Length (Max)**[5]
DC Input at +12V	Yes	Yes, 802.3af	Yes	-58 to 167°F (-50 to 75°C)	16 AWG, 8 A	20'/6.1m
DC Input at +24V	Yes	Yes, 802.3af	Yes	-58 to 167°F (-50 to 75°C)	20 AWG, 4 A	30'/9.1m
DC Input at +48V	Yes	Yes, 802.3af	Yes	-58 to 167°F (-50 to 75°C)	20 AWG, 2 A	60'/18.3m
POE-IN, 802.3at (POE+, 25W)	Yes	No	Yes	-40 to 167°F (-40 to 75°C)	CAT5e(24AWG), 0.6 A, shielded	100m
POE-IN, 802.3af (POE, 13W)	No(3x3 only)	No	No	-4 to 167°F (-20 to 75°C)	CAT5e(24AWG), 0.6 A, shielded	100m

[4] Refer to Table 14 on page 40 for the restrictions on the temperature limits.

[5] When you use a thicker cable, the maximum length can be increased. When the unit is installed in the environment where the temperature is always higher than -20°C, the maximum length can be double of the value in the table for DC inputs. Furthermore, if the GE-POE-OUT port is not used as POE-PSE (power source), the maximum length can be increased by 10 feet.

Mechanical Specifications

Table 24: Mechanical Specifications for the Access Point

Description	Specification
Enclosure type	IP67 Type 4X
Dimensions (h x w x d)	• IW3702-2E-UXK9: 2.34 x 11.30 x 8.00 in. (5.94 x 28.7 x 20.32 cm) • IW3702-4E-UXK9: 2.34 x 11.30 x 8.00 in. (5.94 x 28.7 x 20.32 cm)
Weight	6.7 lbs. (3.0 kg)

Regulatory Compliance and Safety Information

For information about the international regulatory compliance and safety information for the Cisco IW3702 access point, see the Regulatory Compliance and Safety Information for Cisco IW3702 Access Point on Cisco.com.

Declaration of Conformity for RF Exposure

This section contains information on compliance with guidelines related to RF exposure.

Generic Discussion on RF Exposure

The Cisco products are designed to comply with the following national and international standards on human exposure to radio frequencies:

- US 47 Code of Federal Regulations Part 2 Subpart J
- American National Standards Institute (ANSI) / Institute of Electrical and Electronic Engineers / IEEE C 95.1 (99)
- International Commission on Non Ionizing Radiation Protection (ICNIRP) 98
- Ministry of Health (Canada) Safety Code 6. Limits on Human exposure to radio frequency fields in the range from 3kHz to 300 GHz
- Australia Radiation Protection Standard

To ensure compliance with various national and international Electromagnetic Field (EMF) standards, the system should only be operated with Cisco approved antennas and accessories.

Declaration of Conformity for RF Exposure (ANSI)

United States

This system has been evaluated for RF exposure for humans in reference to ANSI C 95.1 (American National Standards Institute) limits. The evaluation was based on ANSI C 95.1 and FCC OET Bulletin 65C rev 01.01. The minimum separation distance from the antenna to general bystanders is 9 inches (23 cm) to maintain compliance.

Canada

This system has been evaluated for RF exposure for humans in reference to ANSI C 95.1 (American National Standards Institute) limits. The evaluation was based on RSS-102 Rev 2. The minimum separation distance from the antenna to general bystanders is 9 inches (23cm) to maintain compliance.

This Device Meets International Guidelines for Exposure to Radio Waves (ICNIRP)

The Cisco IW3702 access point includes a radio transmitter and receiver. It is designed not to exceed the limits for exposure to radio waves (radio frequency electromagnetic fields) recommended by international guidelines. The guidelines were developed by an independent scientific organization (ICNIRP) and include a substantial safety margin designed to ensure the safety of all persons, regardless of age and health. As such, the systems are designed to be operated to avoid contact with the antennas by the end user.

It is recommended to place the system in a location where the antennas can remain the minimum distance from the user specified in the regulatory guidelines, which are designed to reduce the overall exposure of the user or operator.

Separation Distance		
MPE	Distance	Limit
0.63 mW/cm2	7.87 in. (20 cm)	1.00 mW/cm2

The World Health Organization has stated that present scientific information does not indicate the need for any special precautions for the use of wireless devices. They recommend that if you are interested in further reducing your exposure, you can easily orient antennas away from users or place the antennas at a greater separation distance than recommended.

This Device Meets FCC Guidelines for Exposure to Radio Waves

The Cisco IW3702 access point includes a radio transmitter and receiver. It is designed not to exceed the limits for exposure to radio waves (radio frequency electromagnetic fields) as referenced in FCC Part 1.1310. The guidelines are based on IEEE ANSI C 95.1 (92) and include a substantial safety margin designed to ensure the safety of all persons, regardless of age and health. As such, the systems are designed to be operated to avoid contact with the antennas by the end user. We recommend that you place the system in a location where antennas remain a minimum distance from the user in accordance to the regulatory guidelines, which are designed to reduce the overall exposure of the user or operator.

The device has been tested and found compliant with the applicable regulations as part of the radio certification process.

Separation Distance		
MPE	Distance	Limit
0.63 mW/cm2	20 cm (7.87 inches)	1.00 mW/cm2

The US Food and Drug Administration has stated that present scientific information does not indicate the need for any special precautions for the use of wireless devices. The FCC recommends that if you are interested in further reducing your exposure, you can easily orient antennas away from the user or place the antennas at a greater separation distance than recommended, or lower the transmitter power output.

This Device Meets the Industry Canada Guidelines for Exposure to Radio Waves

The Cisco IW3702 access point includes a radio transmitter and receiver. It is designed not to exceed the limits for exposure to radio waves (radio frequency electromagnetic fields) as referenced in Health Canada Safety Code 6. The guidelines include a substantial safety margin designed into the limit to ensure the safety of all persons, regardless of age and health. As such, the systems are designed

to be operated to avoid contact with the antennas by the end user. We recommend that you place the system in a location where antennas remain a minimum distance from the user in accordance to the regulatory guidelines, which are designed to reduce the overall exposure of the user or operator.

Separation Distance		
MPE	Distance	Limit
0.63 mW/cm2	20 cm (7.87 inches)	1.00 mW/cm2

Health Canada states that present scientific information does not indicate the need for any special precautions for the use of wireless devices. They recommend that if you are interested in further reducing your exposure, you can easily orient antennas away from the user or place the antennas at a greater separation distance than recommended, or lower the transmitter power output.

Additional Information on RF Exposure

You can find additional information on the subject at the following links:

- Cisco Systems Spread Spectrum Radios and RF Safety white paper
- FCC Bulletin 56: Questions and Answers about Biological Effects and Potential Hazards of Radio Frequency Electromagnetic Fields
- FCC Bulletin 65: Evaluating Compliance with the FCC guidelines for Human Exposure to Radio Frequency Electromagnetic Fields
- FCC Bulletin 65C (01-01): Evaluating Compliance with the FCC guidelines for Human Exposure to Radio Frequency Electromagnetic Fields: Additional Information for Evaluating Compliance for Mobile and Portable Devices with FCC limits for Human Exposure to Radio Frequency Emission

You can obtain additional information from the following organizations:

- World Health Organization Internal Commission on Non-Ionizing Radiation Protection
- United Kingdom, National Radiological Protection Board
- Cellular Telecommunications Association at this URL:

  https://www.ctia.org
- The Mobile & Wireless Forum at this URL:

  https://www.mwfai.org

Guidelines for Operating Cisco IW3702 Access Points in Japan

This section provides guidelines for avoiding interference when operating Cisco IW3702 access points in Japan. These guidelines are provided in both Japanese and English.

Japanese

この機器の使用周波数帯では、電子レンジ等の産業・科学・医療用機器のほか工場の製造ライン等で使用されている移動体識別用の構内無線局（免許を要する無線局）及び特定小電力無線局（免許を要しない無線局）が運用されています。

1　この機器を使用する前に、近くで移動体識別用の構内無線局及び特定小電力無線局が運用されていないことを確認して下さい。

2　万一、この機器から移動体識別用の構内無線局に対して電波干渉の事例が発生した場合には、速やかに使用周波数を変更するか又は電波の発射を停止した上、下記連絡先にご連絡頂き、混信回避のための処置等(例えば、パーティションの設置など)についてご相談して下さい。

3　その他、この機器から移動体識別用の特定小電力無線局に対して電波干渉の事例が発生した場合など何かお困りのことが起きたときは、次の連絡先へお問い合わせ下さい。

連絡先：03-6434-6500

208697

English

This equipment operates in the same frequency bandwidth as industrial, scientific, and medical devices such as microwave ovens and mobile object identification (RF-ID) systems (licensed premises radio stations and unlicensed specified low-power radio stations) used in factory production lines.

1. Before using this equipment, ensure that no premises radio stations or specified low-power radio stations of RF-ID are in the vicinity.
2. If this equipment causes RF interference to a premises radio station of RF-ID, promptly change the frequency or stop using the device; call the number below and ask for recommendations on avoiding radio interference such as setting partitions.
3. If this equipment causes RF interference to a specified low-power radio station of RF-ID, call the number below. Contact Number: 03-6434-6500

Administrative Rules for Cisco IW3702 Access Points in Taiwan

This section provides administrative rules for operating Cisco IW3702 access points in Taiwan. The rules for all access points are provided in both Chinese and English.

Chinese Translation Part 1

低功率電波輻射性電機管理辦法

第十二條　經型式認證合格之低功率射頻電機，非經許可，公司、商號或使用者均不得擅自變更頻率、加大功率或變更原設計之特性及功能。

第十四條　低功率射頻電機之使用不得影響飛航安全及干擾合法通信；經發現有干擾現象時，應立即停用，並改善至無干擾時方得繼續使用。

前項合法通信，指依電信法規定作業之無線電信。

低功率射頻電機須忍受合法通信或工業、科學及醫療用電波輻射性電機設備之干擾。

127048

English Translation Part 1

Administrative Rules for Low-power Radio-Frequency Devices

Article 12: For those low-power radio-frequency devices that have already received a type-approval, companies, business units or users should not change its frequencies, increase its power or change its original features and functions.

Article 14: The operation of the low-power radio-frequency devices is subject to the conditions that no harmful interference is caused to aviation safety and authorized radio station; and if interference is caused, the user must stop operating the device immediately and can't re-operate it until the harmful interference is clear.

The authorized radio station means a radio-communication service operating in accordance with the Communication Act.

The operation of the low-power radio-frequency devices is subject to the interference caused by the operation of an authorized radio station, by another intentional or unintentional radiator, by industrial, scientific and medical (ISM) equipment, or by an incidental radiator.

Chinese Translation Part 2

低功率射頻電機技術規範

4.7 無線資訊傳輸設備

4.7.5 在 5.25-5.35 秭赫頻帶內操作之無線資訊傳輸設備，限於室內使用。

4.7.6 無線資訊傳輸設備須忍受合法通信之干擾且不得干擾合法通信；如造成干擾，應立即停用，俟無干擾之虞，始得繼續使用。

4.7.7 無線資訊傳輸設備的製造廠商應確保頻率穩定性，如依製造廠商使用手冊上所述正常操作，發射的信號應維持於操作頻帶中。 202591

English Translation Part 2

Low-power Radio-frequency Devices Technical Specifications:

4.7	Unlicensed National Information Infrastructure
4.7.5	Within the 5.25-5.35 GHz band, U-NII devices will be restricted to indoor operations to reduce any potential for harmful interference to co-channel MSS operations.
4.7.6	The U-NII devices shall accept any interference from legal communications and shall not interfere the legal communications. If interference is caused, the user must stop operating the device immediately and can't re-operate it until the harmful interference is clear.
4.7.7	Manufacturers of U-NII devices are responsible for ensuring frequency stability such that an emission is maintained within the band of operation under all conditions of normal operation as specified in the user manual.

Operation of Cisco IW3702 Access Points in Brazil

This section contains information for operating Cisco IW3702 access points in Brazil.

Regulatory Information

Portuguese Translation

Este equipamento opera em caráter secundário, isto é, não tem direito a proteção contra interferência prejudicial, mesmo de estações do mesmo tipo, e não pode causar interferência a sistemas operando em caráter primário.

English Translation

This equipment operates on a secondary basis and consequently must accept harmful interference, including interference from stations of the same kind. This equipment may not cause harmful interference to systems operating on a primary basis.

Declaration of Conformity Statements

All the Declaration of Conformity statements related to this product can be found at the following location:

http://www.ciscofax.com

Ports and Connectors

The port pinouts and connector details are described in this section.

Power Port

The power port is a 4-pin M12 A-code male connector.

Figure 11: Power Port Connector Pinouts

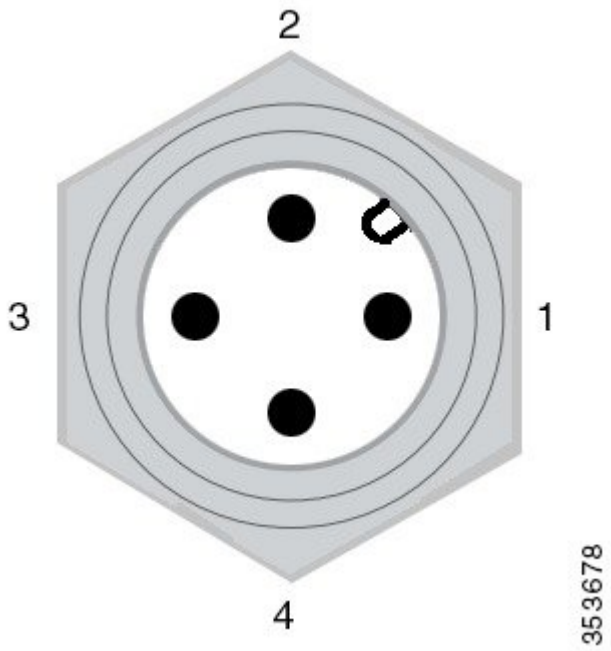

1	Positive DC power connection	3	Negative DC power connection
2	Positive DC power connection	4	Negative DC power connection

PoE OUT Port

The PoE OUT port is an 8-pin M12 X-code female connector.

Figure 12: PoE OUT Port Pinouts

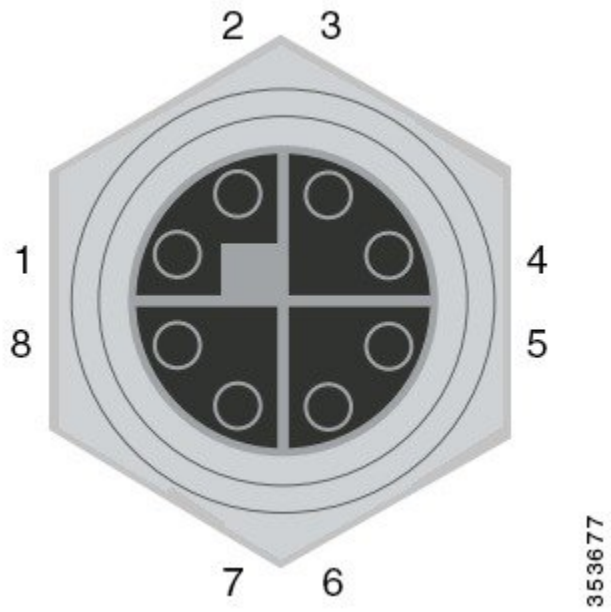

1	0_P signal	5	3_P
2	0_N signal	6	3_N
3	1_P signal	7	2_N
4	1_N signal	8	2_P

PoE IN Port

The PoE IN port is a 8-pin M12 X-code female connector.

Figure 13: PoE IN Port Pinouts

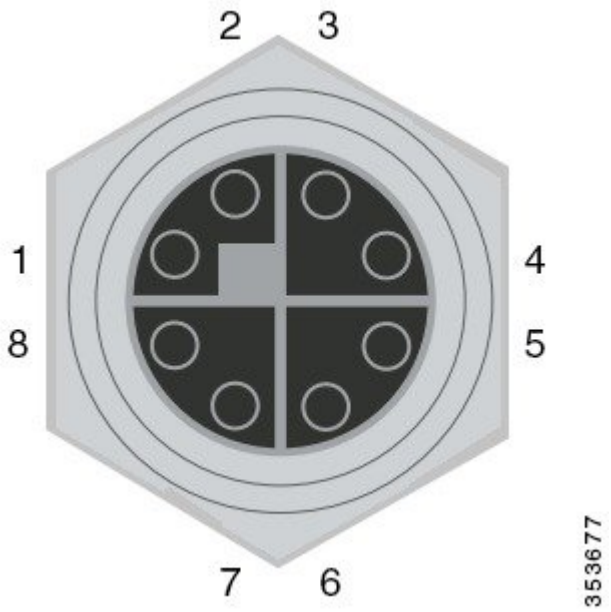

1	0_P signal	5	3_P
2	0_N signal	6	3_N
3	1_P signal	7	2_N
4	1_N signal	8	2_P

Console Port

The console port is an RJ-45 connector.

Table 25: Console Port Pinouts

Pin	Signal
1	RTS output
2	DTR input
3	TxD output
4	GND
5	GND
6	RxD input
7	DSR output
8	CTS input

Related Documentation

The following are other documents in the IW3700 Industrial Wireless Access Point Series:

- Cisco IW3702 Access Point Mounting Guide
- Cisco Wireless LAN Controller Software Release Notes
- Cisco Industrial Wireless 3700 Series Access Points Ordering Guide

Obtaining Documentation and Submitting a Service Request

For information on obtaining documentation, using the Cisco Bug Search Tool (BST), submitting a service request, and gathering additional information, see What's New in Cisco Product Documentation .

To receive new and revised Cisco technical content directly to your desktop, you can subscribe to the What's New in Cisco Product Documentation RSS feed . The RSS feeds are a free service.

Americas Headquarters
Cisco Systems, Inc.
San Jose, CA 95134-1706
USA

Asia Pacific Headquarters
CiscoSystems(USA)Pte.Ltd.
Singapore

Europe Headquarters
CiscoSystemsInternationalBV
Amsterdam,TheNetherlands

Cisco has more than 200 offices worldwide. Addresses, phone numbers, and fax numbers are listed on the Cisco Website at www.cisco.com/go/offices.