Trunks

Trunks Overview

Cisco Unified Communications Manager (Unified CM) supports several different types of IP trunks for connectivity with external devices:

- H.225 (H.323)
- SIP
- Intercluster trunks

Only SIP trunks and SIP intercluster trunks can support IPv6. This chapter describes the new IPv6 features and capabilities of these trunks. For information on the general capabilities and functions of Unified CM trunks, refer to the Cisco Collaboration System Solution Reference Network Design (SRND), available at Link .

There are several possible configurations for Unified CM SIP trunks:

- Inbound and outbound SIP Early Offer trunk calls
- Inbound and outbound SIP Delayed Offer trunk calls (This chapter focuses on this supported option)

IPv6 SIP Trunks Configuration

To configure SIP trunks to gateways and Unified CM SIP intercluster trunks, select **Devices > Trunks > SIP Trunk in Unified CM Administration**.

The SIP trunk configuration settings discussed in this section are applied through the Common Device Configuration profile that is created and assigned to the SIP trunk (**IP Addressing Mode** and **IP Addressing Mode Preference for Signaling**), and through the SIP Profile configuration assigned to the SIP trunk (**ANAT is not enabled**). The IPv4 to IPv6 media interworking is supported by Unified CM inserting MTPs.

Figure 1: Trunk Configuration in Unified CM Administration

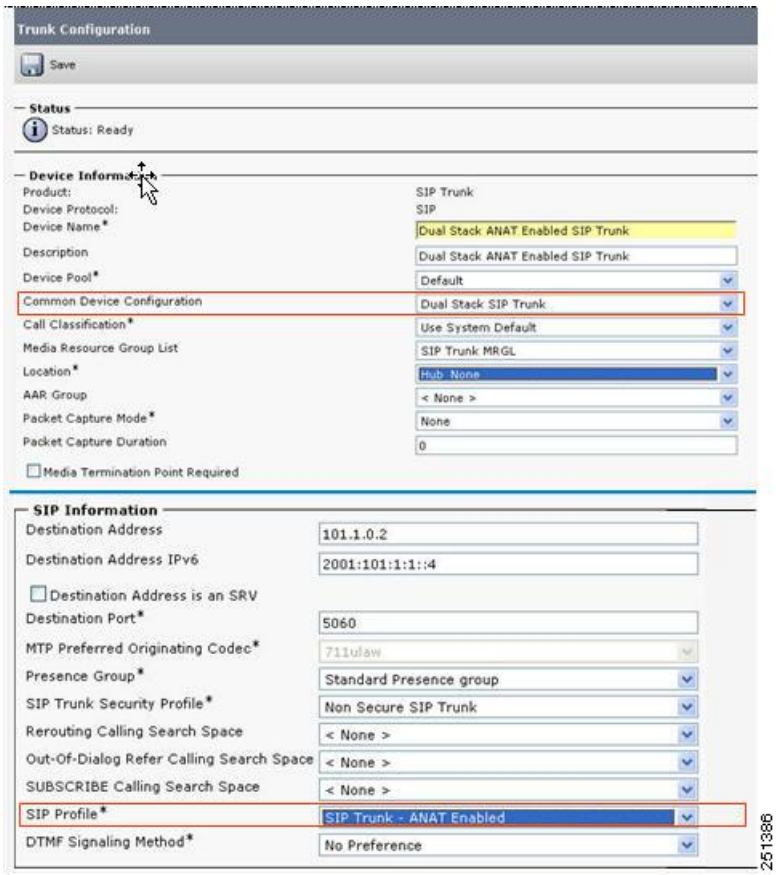

Common Device Configuration Settings for SIP Trunks

This section describes the configuration settings for SIP trunks.

SIP Trunk IP Addressing Mode

You can configure the IP Addressing Mode to one of the following settings:

- IPv4

  In this mode, the SIP trunk uses the Unified CM IPv4 address for signaling and either an MTP or phone IPv4 address for media.

- IPv6

  In this mode, the SIP trunk uses the Unified CM IPv6 address for signaling and either an MTP or phone IPv6 address for media.

- IPv4 and IPv6

  The SIP trunk uses either the Unified CM IPv4 address or the Unified CM IPv6 address for signaling, and an MTP or other trunk address for media.

Figure 2: IP Addressing Mode

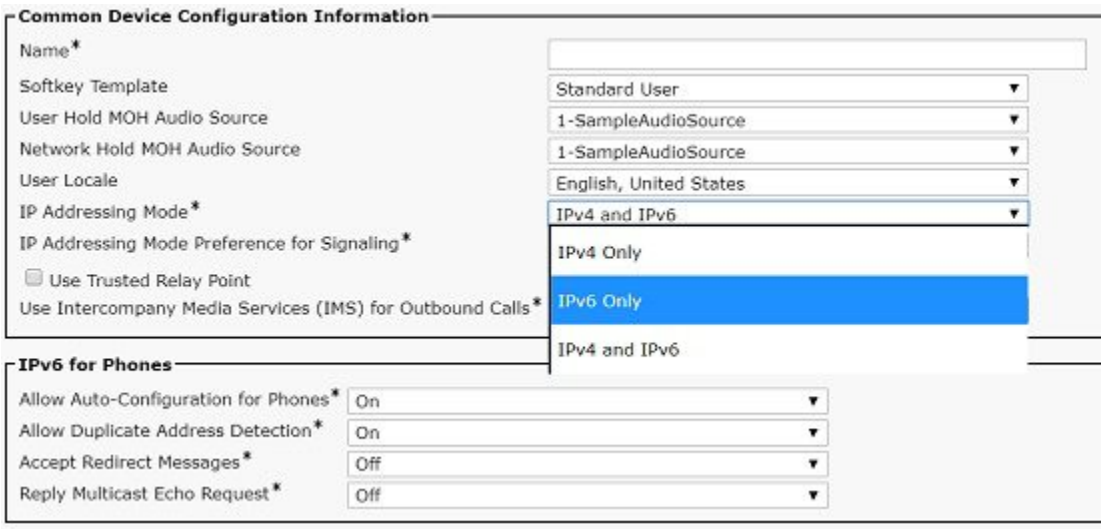

SIP Trunk IP Addressing Mode Preference for Signaling

You can configure the IP Addressing Mode Preference for Signaling to one of the following settings:

- IPv4

  In this mode, the SIP trunk uses the Unified CM IPv4 server address as its source address for SIP signaling.

- IPv6

  In this mode, the SIP trunk uses the Unified CM IPv6 server address as its source address for SIP signaling.

- Use System Default

  In this mode, the SIP trunk uses the cluster-wide Enterprise Parameter configuration value for its IP addressing mode for signaling.

If IPv6 is enabled in the Unified CM cluster, the default SIP trunk setting for the IP Addressing Mode for Signaling is **Use System Default**. With this setting, the SIP trunk adopts the cluster-wide setting for its IP addressing mode for signaling, if the trunk is configured with a destination address of that type. All IPv4 trunks ignore this setting.

The SIP trunk's IP Addressing Mode Preference for Signaling is used only for outbound calls. Unified CM listens for incoming SIP signaling on both the IPv4 and IPv6 address.

Figure 3: P Addressing Mode Preference for Signaling

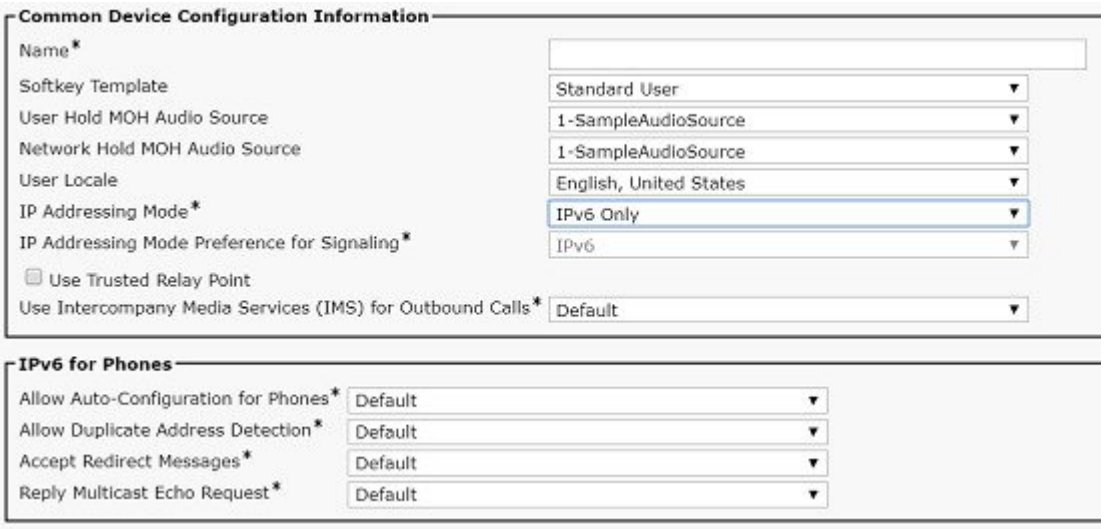

Allow Auto-Configuration for Phones

The setting of Allow Stateful Auto-Configuration for Phones is not used by SIP trunks.

Supported IPv6 SIP Trunk Configurations and Associated Call Flows

How you configure your Unified CM IPv6 SIP trunk will, to some extent, depend upon the capabilities of the far-end SIP trunk device. Usually this far-end SIP trunk device is another Unified CM cluster, IPv6 SIP gateway, or third-party IPv6 SIP call agent.

Some general guidance on IPv6 SIP trunk configuration:

- IPv6 SIP trunks should be configured with an IP addressing mode of IPv4 and IPv6.
- SIP Early Offer and SIP Delayed Offer are supported, both in symmetric and asymmetric configurations, as follows:
  - Outbound and inbound SIP Early Offer (**Supported** option)
  - Outbound and inbound SIP Delayed Offer
  - Outbound SIP Early Offer and inbound SIP Delayed Offer
  - Outbound SIP Delayed Offer and inbound SIP Early Offer

Early Offer and SIP Trunk Calls

For all Unified CM SIP trunks, you must check the **MTP required** check box on the trunk configuration page to enable SIP Early Offer in IPv4 (IPv6 does not support Early Offer). When **MTP required** is checked, a

media termination point (MTP) is used in the media path for all inbound and outbound calls. This statically assigned MTP affects all calls in the following ways:

- Because the MTP is placed in the media path for all calls, rather than having one call leg from the calling phone to the called phone, the insertion of the MTP creates two legs: one from the calling phone to the MTP, and the other from the MTP to the called phone. For signaling purposes, this can be considered to be two calls. The calling phone and MTP negotiate media capabilities (such as codec, IP addresses, and UDP port numbers to be used), as do the MTP and the called phone at the far end of the SIP trunk.
- The statically assigned MTP (**MTP required** checked) must be configured to use one codec type (G711 or G729). Assigning a single voice codec to this statically assigned MTP disables the use of the pass-through codec. This, in turn, prevents the negotiation of the pass-through codec that is required for video calls or encrypted calls. (T.38 fax calls are supported with statically assigned MTPs.) Therefore, if support for video or encryption is required over the SIP trunk, SIP Delayed Offer (no statically assigned MTP) must be used.

Note The pass-through codec should be configured on all dynamically inserted MTPs. To enable the use of the pass-through codec, configure the MTP with both a standard codec and the pass-through codec.

If SIP Early Offer is required for dual-stack SIP Unified CM trunks, then you must configure the Cisco IOS MTP to use both an IPv6 and IPv4 address. For details, see Media Resources and Music on Hold Overview.

Delayed Offer and SIP Trunks

Delayed Offer trunks do not have a statically assigned MTP and therefore MTP resources are not used for every call. For Delayed Offer calls, Unified CM attempts to set up the call using a single call leg between the calling and called device, and in doing so must consider the IP addressing mode configuration of both the Unified CM trunk and the IP phone registered with Unified CM. In certain calls where there are IP addressing mode mismatches between the Unified CM trunk and the registered phone, Unified CM dynamically inserts an MTP to resolve this mismatch. The pass-through codec is supported by this dynamically inserted MTP, and video calls and encrypted calls can be established with this MTP in the call path. The pass-through codec should be configured on all dynamically inserted MTPs. To enable the use of the pass-through codec, configure the MTP with both a standard codec and the pass-through codec.

Unified CM SIP Trunk Signaling

The following factors affect which IP addressing version is used for signaling on Unified CM SIP trunks:

- Call direction
- IP addressing mode of the trunk
- Configured destination addresses of the trunk
- Trunk's IP addressing mode preference for signaling
- Cluster-wide IP addressing mode preference for signaling

IP Addressing Version Used for SIP Signaling for Outbound

The IP addressing version for signaling is determined by the following factors, in the order listed here:

1. The IP Addressing Mode of the SIP trunk (IPv4 or IPv6)
2. The configured destination addresses of the SIP trunk (IPv4 or IPv6)
   - If only one destination address is configured (IPv4 or IPv6), the IP addressing version must match the IP Addressing Mode of the trunk. If these two values do not match, the SIP trunk connection is not established.
   - If two trunk destination addresses are configured (IPv4 and IPv6), then the IP addressing version is determined by the SIP trunk's IP Addressing Mode Preference for Signaling (IPv4, IPv6, or Use System Default). If the **Use System Default** setting is used, then the IP addressing version is determined by the cluster-wide IP Addressing Mode Preference for Signaling (IPv4 or IPv6).

IP Addressing Version Used for SIP Signaling for Inbound

For inbound calls, the IP addressing version used for signaling is based on the trunk destination addresses and port numbers configured in Unified CM. If the signaling source address and port number received from the calling device match a configured destination address and port number on the SIP trunk, then the signaling connection is established.

Unified CM provides the following configuration setting options for the SIP trunk destination address:

- One IPv4 address configured
- One IPv6 address configured
- One IPv4 and one IPv6 address configured

If IPv6 is enabled in the cluster, Unified CM servers listen for incoming SIP trunk calls destined to their configured IPv4 and IPv6 addresses and source port number.

Media Address Selection for Calls over Dual-Stack SIP Trunks

Many configuration options are possible for SIP trunks. Trunks may be single or dual stack and use SIP Early Offer or SIP Delayed Offer. This chapter, while not exhaustive, discusses the significant configuration options and their outcomes in terms of the addresses that are exchanged and used for media. Early Offer call scenarios are considered first, followed by Delayed Offer call scenarios.

Depending on the call scenario, media address selection for calls over dual-stack SIP trunks can be based on:

- Call direction
- Whether Delayed Offer or Early Offer is used
- The IP Addressing Mode of the trunk
- The cluster-wide IP Addressing Mode Preference for Media
- The IP Addressing Mode of the phone

The remaining sections of this chapter review media selection for the following Unified CM call flows:

- SIP Early Offer calls
  - Outbound Early Offer calls without ANAT
  - Inbound Early Offer calls without ANAT
- SIP Delayed Offer calls
  - Outbound Delayed Offer calls without ANAT
  - Inbound Delayed Offer calls without ANAT

Media Selection for Outbound IPv6 Early Offer Calls Without ANAT

SIP Early Offer calls involve two call legs: one from the phone to trunk MTP, and the other from the trunk MTP to the SIP voice gateway. The Cisco IOS MTP is configured to support both IPv4 and IPv6 addresses. ANAT has not been enabled on the SIP trunk in the following figure, so as with a standard SIP trunk, only a single IP addressing version is exchanged.

Figure 4: Media Selection on Unified CM SIP Trunks for Outbound Early Offer Calls Without ANAT

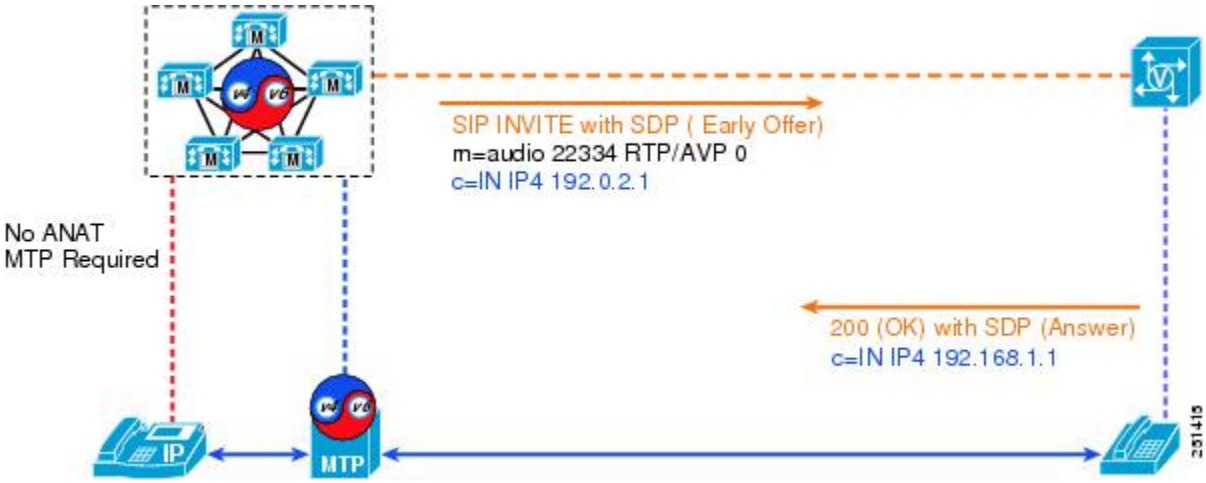

Call Leg from Phone to Trunk MTP: Standard Unified CM In-Cluster Negotiation

The MTP is dual-stacked and can match the media addressing type of the phone if it is set to IPv4-only or IPv6-only. If the phone is also dual-stacked, the cluster-wide IP Addressing Mode Preference for Media (IPv4 or IPv6) determines which IP addressing version is used for media.

Call Leg from MTP Trunk to Voice Gateway: ANAT Not Enabled, and One Media Address Is Sent in SDP (IPv4 or IPv6)

For outbound Early Offer calls where ANAT is not enabled, the IP Addressing Mode of the SIP trunk determines what is sent in the SDP body of the SIP Offer, as follows:

- IP Addressing Mode = IPv4 only—The IPv4 address of the MTP is sent in the SDP body.

- IP Addressing Mode = IPv6 only—The IPv6 address of the MTP is sent in the SDP body.
- IP Addressing Mode = IPv4 and IPv6—The cluster-wide IP Addressing Mode Preference for Media (IPv4 or IPv6) is used to determine which MTP address is sent in the SDP body.

Media Selection for Inbound Early Offer Calls Without ANAT (IPv6 Not Supported)

Note IPv6 is **not** supported.

SIP Early Offer calls involve two call legs: one from the phone to the trunk MTP, and the other from the trunk MTP to the SIP voice gateway. The Cisco IOS MTP is configured to support both IPv4 and IPv6 addresses. ANAT has not been enabled on the SIP trunk in Figure 7-6, so as with a standard SIP trunk, only a single IP addressing version is exchanged in the SIP Offer and Answer.

Figure 5: Media Selection on Unified CM SIP Trunks for Inbound Early Offer Calls Without ANAT

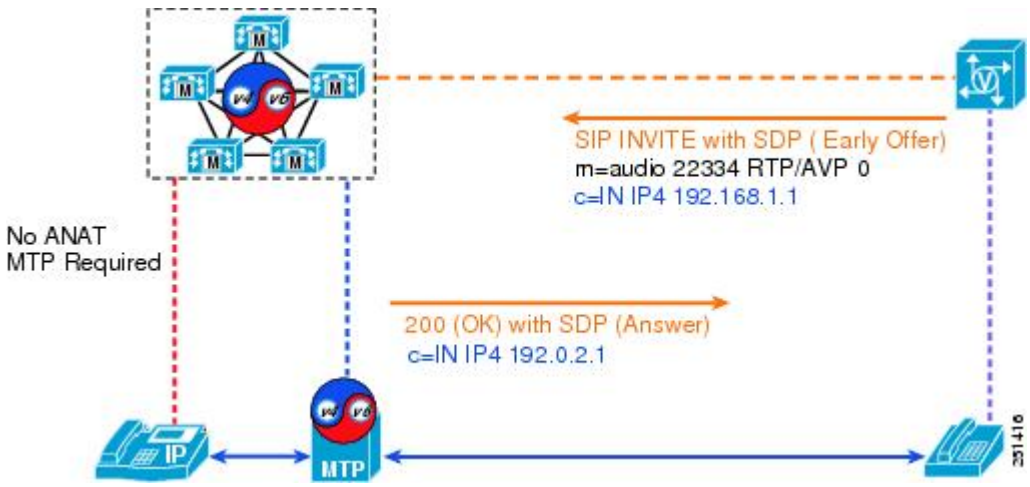

Call Leg from Trunk MTP to Phone: Standard Unified CM In-Cluster Negotiation

The MTP is dual-stacked and can match the media addressing type of the phone if it is set to IPv4 only or IPv6 only. If the phone is also dual-stacked, the cluster-wide IP Addressing Mode Preference for Media (IPv4 or IPv6) determines which IP addressing version is used for media.

Call Leg from Voice Gateway to Trunk MTP: ANAT Not Enabled, and One Media Address Is Received in SDP

For inbound Early Offer calls where ANAT is not enabled, the IP Addressing Mode of the SIP trunk determines whether the address received in the SDP body of the SIP Offer is accepted or rejected, as follows:

- IP Addressing Mode = IPv4 only:
  - If an IPv4 address is received in the SDP body, proceed with the call.
  - If an IPv6 address is received in the SDP body, reject the call.

- IP Addressing Mode = IPv6 only:
  - If an IPv6 address is received in the SDP body, proceed with the call.
  - If an IPv4 address is received in the SDP body, reject the call.

Note For these trunk calls, Unified CM does not insert an MTP to resolve a media addressing version mismatch between the two voice devices.

- IP Addressing Mode = IPv4 and IPv6:
  - If an IPv4 address is received in the SDP body, proceed with the call.
  - If an IPv6 address is received in the SDP body, proceed with the call.

SIP Trunks Using Delayed Offer

With Delayed Offer, SIP trunks do not use a statically assigned MTP, and typically only one call leg is created between the calling phone and called phone or device. From the perspective of Unified CM, this makes the selection of which IP addressing version to use a little more involved because in this case both the trunk's settings and the phone's settings must be taken into account.

Media Selection for Outbound Delayed Offer Calls Over Unified CM SIP Trunks Without ANAT

As shown in the following figure, SIP Delayed Offer calls typically involve a single call leg from the phone to the SIP voice gateway. ANAT has not been enabled on this SIP trunk, so as with a standard SIP trunk, only a single IP addressing version is exchanged in the SIP Offer and Answer.

Figure 6: Media Selection on Unified CM SIP Trunks for Outbound Delayed Offer Calls Without ANAT

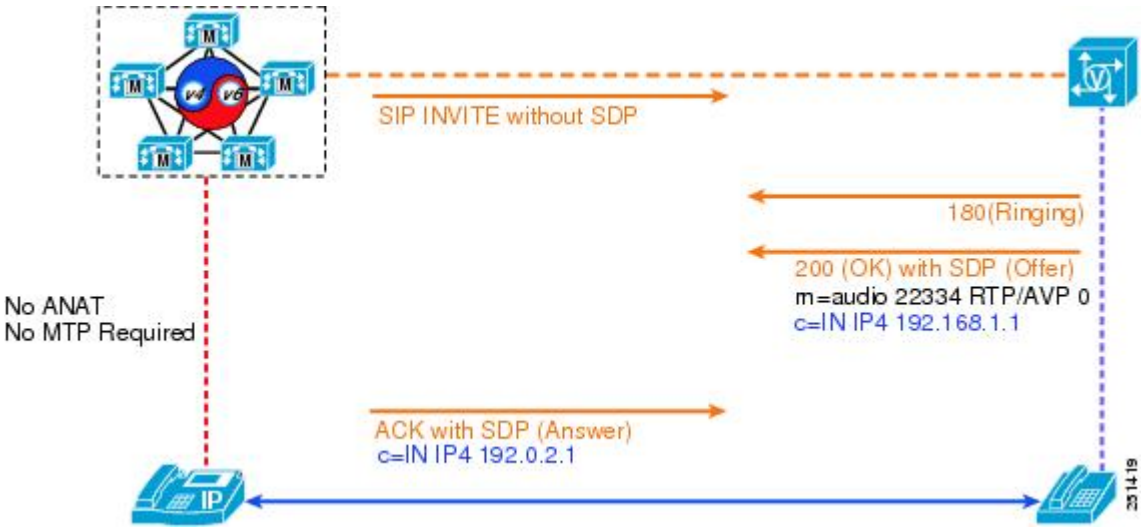

For outbound Delayed Offer calls, the IP Addressing Mode settings of both the trunk and the phone influence the call setup in the following ways:

- The IP Addressing Mode setting of the trunk determines whether the received SIP Offer is accepted or rejected.
- The IP Addressing Mode setting of the phone determines which address (phone or MTP) is returned in the SIP Answer from Unified CM.

In this scenario, Unified CM can dynamically insert an MTP, if needed, into the call to convert the IP addressing version of the voice media stream between the calling and called devices. As mentioned previously, dynamically inserted MTPs support the pass-through codec, allowing video calls and encrypted calls to be established.

IP Addressing Mode of the Trunk

- IP Addressing Mode = IPv4 only:
  - If an IPv4 address is received in the SDP body, proceed with the call.
  - If an IPv6 address is received in the SDP body, reject the call.
- IP Addressing Mode = IPv6 only:
  - If an IPv6 address is received in the SDP body, proceed with the call.
  - If an IPv4 address is received in the SDP body, reject the call.

Note For trunk call signaling, Unified CM does not insert an MTP to resolve a media addressing version mismatch.

- IP Addressing Mode = IPv4 and IPv6 (Supported configuration):
  - If an IPv4 address is received in the SDP body, proceed with the call.

- If an IPv6 address is received in the SDP body, proceed with the call.

For SIP trunks using Delayed Offer and not using ANAT, the supported trunk IP Addressing Mode setting is **IPv4 and IPv6** because both IPv6 calls and IPv4 calls are accepted by the trunk.

IP Addressing Mode of the Phone

- IP Addressing Mode = IPv4 only:
  - If an IPv4 address is received in the SDP body, proceed with the call and return the IPv4 address of the phone in the SDP body of the SIP answer.
  - If an IPv6 address is received in the SDP body, dynamically insert an MTP into the media path to convert IP addressing versions, then proceed with the call. Return the IPv6 address of the MTP in the SDP body of the SIP answer.
- IP Addressing Mode = IPv6 only:
  - If an IPv6 address is received in the SDP body, proceed with the call and return the IPv6 address of the phone in the SDP body of the SIP answer.
  - If an IPv4 address is received in the SDP body, dynamically insert an MTP into the media path to convert IP addressing versions, then proceed with the call. Return the IPv4 address of the MTP in the SDP body of the SIP answer.
- IP Addressing Mode = IPv4 and IPv6:
  - If an IPv4 address is received in the SDP body, proceed with the call and return the IPv4 address of the phone in the SDP body of the SIP answer.
  - If an IPv6 address is received in the SDP body, proceed with the call and return the IPv6 address of the phone in the SDP body of the SIP answer.

When an MTP Is Required, Will the MTP of the Phone or the Trunk Be Used?

The cluster-wide IP Addressing Mode Preference for Media determines whether the MTP of the phone or of the trunk is used to convert the voice media stream between IPv4 and IPv6. This preference is used to select an MTP so that the longest Real-Time Transport Protocol (RTP) call leg in the cluster matches the cluster-wide preference.

Deployment Considerations for Delayed Offer Calls over Trunks without ANAT

If a call from an IPv4-only phone receives a SIP Offer that contains an IPv6 address, or if a call from an IPv6-only phone receives a SIP Offer that contains an IPv4 address, Unified CM dynamically inserts an MTP to convert between IPv4 and IPv6. In deployments with large numbers of IPv4-only phones, any SIP trunk call to or from an IPv6-only device requires an MTP for conversion between IPv4 and IPv6. Therefore, we recommend that you provide MTP resources for IPv4-only and IPv6-only devices in the Unified CM cluster.

Media Selection for Inbound Delayed Offer Calls Over Unified CM SIP Trunks Without ANAT

As shown in the following figure, SIP Delayed Offer calls typically involve a single call leg from the phone to the SIP voice gateway. ANAT has not been enabled on this SIP trunk, so as with a standard SIP trunk, only a single IP addressing version is exchanged in the SIP Offer and Answer.

Figure 7: Media Selection on Unified CM SIP Trunks for Inbound Delayed Offer Calls Without ANAT

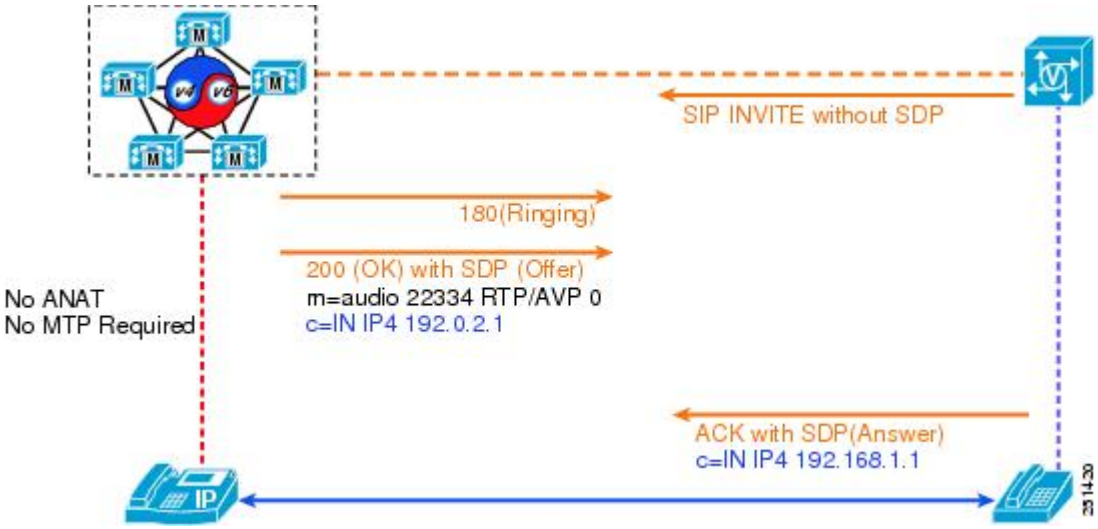

For inbound Delayed Offer calls, the combined settings of the IP Addressing Mode of both the trunk and the phone determine which IP addressing version and which device's IP address is sent in the SDP body of the SIP Offer.

For inbound Delayed Offer calls, if a mismatch exists between the IP addressing modes of the phone and the trunk, Unified CM can dynamically insert an MTP into the call path to convert the IP addressing version of the voice media stream from the IP phone, so that it matches that configured on the trunk. In this case, the address of the MTP is sent in the SDP body of Unified CM's SIP Offer.

For SIP trunks using Delayed Offer and not using ANAT, the supported IP Addressing Mode setting for the trunk is **IPv4 and IPv6**. With this setting, Unified CM does not need to insert MTPs for inbound SIP Delayed Offer calls.

When an MTP Is Required, Will the MTP of the Phone or the Trunk Be Used?

The cluster-wide IP Addressing Mode Preference for Media determines whether the MTP of the phone or of the trunk is used to convert the voice media stream between IPv4 and IPv6. See the following table for details. This preference is used to select an MTP so that the longest Real-Time Transport Protocol (RTP) call leg in the cluster matches the cluster-wide preference.

As mentioned previously, dynamically inserted MTPs do support the pass-through codec, allowing video calls and encrypted calls to be established.

Table 1: IP Addressing Mode Preference for Media

IP Addressing Mode of Phone	IP Addressing Mode of Trunk	Address Sent in SIP Offer by Unified CM
IPv4 Only	IPv4 Only	IPv4 address of phone
IPv4 Only	IPv4 and IPv6	IPv4 address of phone
IPv6 Only	IPv6 Only	IPv6 address of phone
IPv6 Only	IPv4 and IPv6	IPv6 address of phone
IPv4 Only	IPv6 Only	Insert an MTP and use its IPv6 address.
IPv6 Only	IPv4 Only	Insert an MTP and use its IPv4 address.
IPv4 and IPv6	IPv4 Only	IPv4 address of phone
IPv4 and IPv6	IPv6 Only	IPv6 address of phone
IPv4 and IPv6	IPv4 and IPv6 Only	IPv4 or IPv6 address of phone[1]

[1] The cluster-wide IP Addressing Mode Preference for Media determines which phone address (IPv4 or IPv6) Unified CM sends in the SDP body of the SIP Offer.