Theory of Operation

This chapter describes the theory of operation for the node, including functional descriptions of each module in the node.

The node is comprised of two parts, the lid and the base.

The lid houses an optical interface board (OIB), a Remote PHY device (optional), one or two power supplies, and a fiber management tray/track.

The base houses the RF amplifier module, the high pass filter trim (HPFT) module and diplexer that plug into it.

System Diagrams

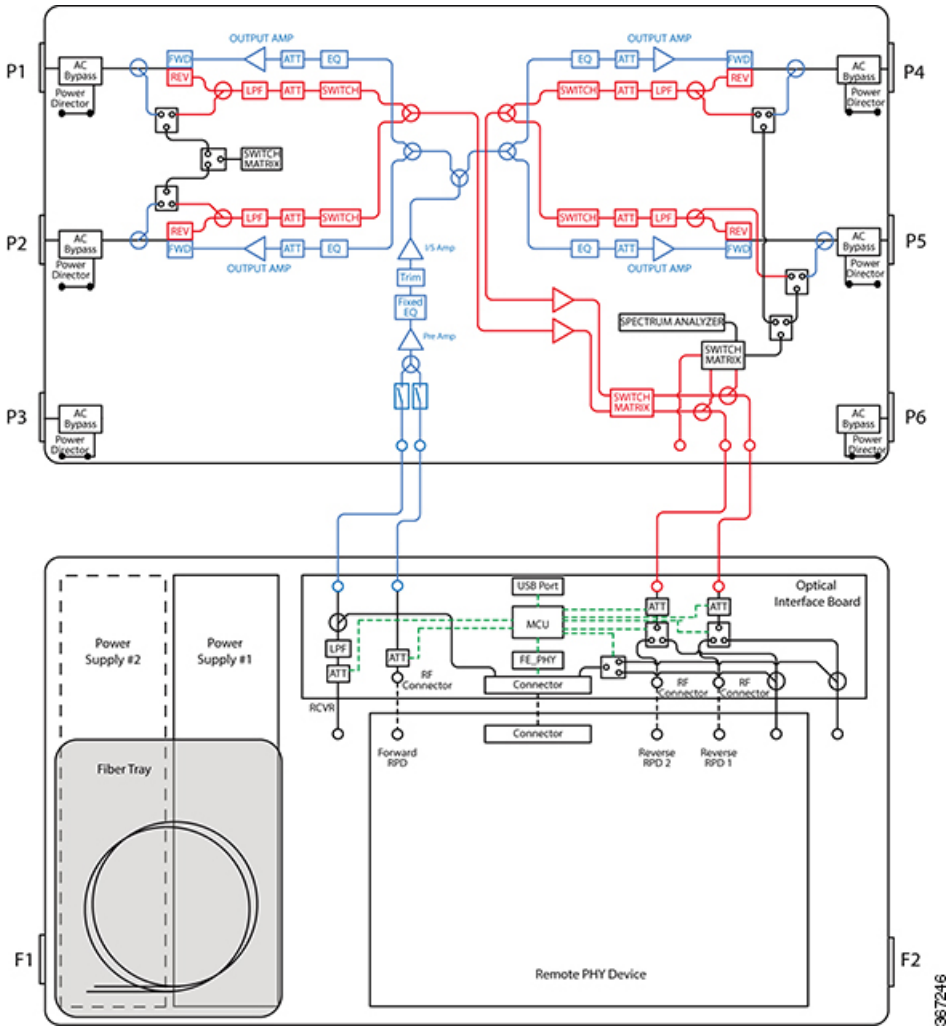

Blue lines: forward path

Red lines: reverse path

Forward Path

Forward path refers to signals received by the node from the hub or headend. These signals are amplified in the node and routed to subscribers through the cable distribution network.

Forward Path Signal Routing

Node forward path signal routing functions are described below.

Stage	Description
1	Optical signals from the hub or headend are transported to the Remote PHY device in the node.
2	The Remote PHY module detects the signal on the optical carrier applied to it and outputs an electrical RF signal to the node Optical Interface Board (OIB).
3	The RF signal travel across the OIB and cables to the launch amplifier.
4	The forward amplification path in the RF amplifier module is composed of one common input amplification stage, HPFT and interstage amplification stage in series followed by a 4-way power divider. Each output of the power divider feeds a power doubler output amplification stage. This topology provides four node output ports with one common input signal source.
5	The forward amplification path in the RF amplifier module also contains trimming, thermal compensation, attenuation, equalization, and filtering circuitry.

Reverse Path

Reverse path refers to signals received by the node from the cable distribution network. These signals are amplified in the node and returned to the headend optically through the fiber portion of the network.

Reverse Path Signal Routing

Node reverse path signal routing functions are described below.

Stage	Description
1	Reverse path RF signals are applied to node output ports.
2	The RF signals from ports 1 and 2 are combined as well as the signals from ports 4 and 5. Each set of combined ports are amplified independently in the RF amplifier module. Segmentation or combination of these reverse signals is set by the switch located on the launch amplifier module.
3	Each of the reverse amplification paths in the RF amplifier module also contains attenuation, trimming, filtering, and RF On/Off switch circuitry.
4	The pairs (ports 1 and 2, ports 4 and 5) of reverse path signals can be combined or keep separate, depending on the setting of the reverse segmentation switch. They are then routed to the OIB.
5	The RF signals travel across the OIB to the Remote PHY Device. The Remote PHY Device converts the RF signals to optical signals which are transmitted through the fiber portion of the network back to the hub or headend.

Spectrum Capture

A built-in spectrum analyzer is used to monitor these RF signals: four reverse inputs, four forward outputs and two RPD inputs. Users can monitor each individual signal via the LCS app.

Power Distribution

The node is powered by one or two power supplies.

Node power distribution functions are described below.

Stage	Description
1	45 to 90 V AC is applied to one or two power supply modules in the node.
2	The power supply module(s) convert(s) the AC input to +24.5, +8.5, -6.0, and +5.5 V DC.
3	The +24.5, +8.5, -6.0, and +5.5 V DC lines are routed to node internal modules.
4	If two power supplies are installed and both are active, the load is shared equally between them.
5	An AC segmentable shunt is available to separate the AC connection to ports 1-3 from that of ports 4-6. This allows the node to be configured where one power supply is powered from ports 1-3 and a second power supply is powered from ports 4-6.

RF Amplifier Module

This section describes the RF amplifier module. The RF amplifier module contains the intelligent forward amplifier module (IFAM) and intelligent reverse amplifier module (IRAM).

The IFAM provides all forward signal amplification outside the iRPD in the node. It contains four forward amplification paths. The forward amplification paths have one common input, and each of the forward paths functions the same.

The IRAM provides all reverse signal amplification outside the iRPD in the node. It has four independent signal inputs (from ports 1, 2, 4, and 5). The reverse signals from ports 1 and 2 (left side) are combined as well as the reverse signals from ports 4 and 5 (right side). These (left and right side) reverse path signals then travel through the on board reverse configuration circuitry. This reverse configuration circuitry determines whether the (left and right side) signal paths remain segmented or if they are combined.

There are no physical test points on RF amplifier module, forward and reverse path. Built-in spectrum capture circuitry is used to monitor the forward and reverse paths.

To save power, the user can independently turn off any of the forward path gain blocks. The node can also automatically adjust power consumption based on the channel plan. Note that this feature is disabled by default and the user needs to use LCS to enable it.

AGC

AGC refers to the automatic tilt and level control of the forward amplifiers. AGC operates on each of the four forward ports independently by using the output levels (measured by the internal spectrum analyzer) to continuously adjust the attenuator and equalizers to maintain the desired output level and tilt which are set using LCS. Thermal compensation is also incorporated in the attenuator and equalizer settings. If input levels are significantly changed, it takes AGC several minutes to “lock” back in. The attenuator and equalizer settings are stored in non-volatile memory and restored after a power outage.

Auto-setup

Auto-setup is triggered by LCS and applies only to the forward amplifier. When auto-setup is triggered, the output level of the input source is measured and the attenuator(s) on the OIB are adjusted to optimize the input level into the forward amplifier. Auto-setup has to function any time there is a significant change in the input levels. Note that the attenuator settings are stored in non-volatile memory and restored after a power outage.

Reverse path switching is accomplished automatically by the iNode.

Optical Interface Board

The Optical Interface Board (OIB) provides all interconnections between the modules in the housing lid of the node. The modules in the housing lid include the power supplies and iRPD. Each module in the lid plugs directly into the OIB through a connector header, or row of sockets. Software controlled output and input attenuators are provided on the OIB for iRPD in the housing lid. All RF and power cables running between the housing lid and base also plug into the OIB.

There is a USB port on the OIB which is used to connect to a smart mobile device. With this USB port the operator can use the local control software installed on the smart mobile device to configure and monitor the node. For more information, see Cisco GS7000 Super High Output Intelligent Node Software Installation and Configuration Guide.

The OIB integrates a CPU that is used to control all RF functions on the node.

There are 3 LEDs on the OIB, Heartbeat LED, Communication LED, and Power LED.

Condition	Power LED	Heartbeat LED	Communication LED	
Normal	On	Steady blink	Steady blink	Normal behavior
Power supply fault	Off	Off	Off	Check power supply and power supply voltages. Check cabling and that the appropriate power shunts are installed in the launch amplifier.
Error #1	On	Not blink	Not blink	If Heartbeat LED and Communication LED blink on power up and then stay off, problem is with boot. Can be a device failure or software is not loaded. Try cycling power.
Error #2	On	Steady blink	Not blink	OS is ok but node control software is not running or is stuck. If this condition persists for more than a minute or two after power up, check all the cables connecting the lid and launch amplifier. Try cycling power.
Error #3	On	Not blink	Steady blink	This condition should not be possible unless Heartbeat LED is damaged.

The OIB is field replaceable. The iRPD, power supplies, RF cables, power cables, and OIB mounting screws must be removed in order to remove the OIB from the housing lid.

Note In the overlay configuration, plug a 1dB low pass filter pad to analog receiver path to prevent noise interference from receiver to iRPD.

Intelligent Remote PHY Device

In a Remote PHY network, both downstream and upstream PHY functionality are located at the traditional HFC node site. The node is the optical to electrical transition point in the network.

The Intelligent Remote PHY Device (iRPD) is a plug-in module in the node. It is intended to interact with the cBR-8 router, via a digital physical interface card (DPIC) installed as a module in the cBR-8. It supports these features:

- Full spectrum DOCSIS 3.0 support
- Full spectrum DOCSIS 3.1 support
- Converged broadcast, narrowcast, and VOD video support
- Out of Band (OOB) signaling support
- Dual 10GBE SFP+ backhaul connectivity
- Support of Daisy Chain architecture topology
- CCAP support
- Support of optical overlay architectures

Typically, it takes about 7 minutes after power is applied for an iRPD to go online.

Power Supply Module

The power supply module converts a quasi-square wave, 50 – 60 Hz AC input voltage into four well-regulated DC output voltages. The supply is an off-line, switched-mode power supply with a large operating range. This reduces service outages by converting long duration AC surges into load power. The power supply is a constant power device, meaning that it automatically adjusts its internal operating parameters for the most efficient use of the different levels of input voltage and current it will receive within the cable plant.

The DC output voltages generated by the power supply, at given load currents, are shown below:

- +24.5 VDC @ 6.2 Amps
- +8.5 VDC @ 1.0 Amps
- +5.5 VDC @ 1.3 Amps
- -6.0 VDC @ 0.8 Amps

Test points are provided on top of the power supply module for AC input and all output DC voltage rails.

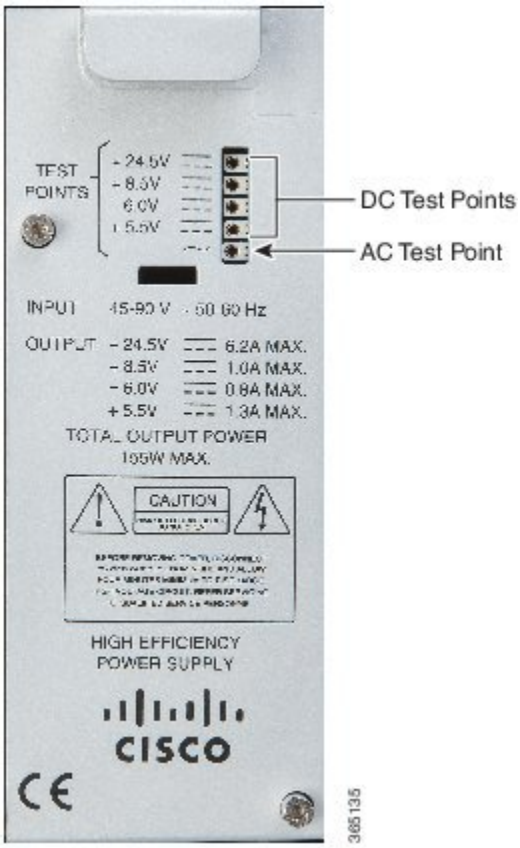

The power supply module plugs directly into the optical interface board, no external cables are required.

A node can be configured with one or two power supplies. AC input voltage can be routed to both power supplies commonly from any node output port. In addition, AC input voltages can be routed in a split fashion to the two power supplies. AC input voltages from the left half of the node (output ports 1 – 3) can be routed to power supply 1 independent of AC input voltages from the right half of the node (output ports 4 – 6) being routed to power supply 2. Each of the power supplies output voltage rails is diode OR'd within the supply. This creates common DC powering circuits when multiple supplies are present in the node.

Node Power Limitations

The node must be configured in a manner that prevents potential thermal overloads. Heat generated by the node can reduce the life of the equipment.

Caution

The life of the equipment may be reduced if configured to draw more than the recommended level of power from the power supplies.

Two power supplies can provide a maximum power level of 150 watts to the node. The RF amplifier uses the majority of the available power. Maintain the total power consumption of all modules in the housing within

these guidelines to minimize the heat generated. Find the optimal configuration by summing the power consumption of the RF amplifier plus the other individual modules in the housing using the following table.

Important Do not populate the housing with any combination of modules that would draw more than the available power of 150 watts.

The following table lists the modules and their respective electrical parameters.

Item	Unit	Value			
Maximum AC through current (continuous)	Amps	15			
Maximum AC through current (surge)	Amps	25			
Component DC Power Consumption (Typical)		+24.5 VDC	+8.5 VDC	+5.5 VDC	-6 VDC
Launch amplifier with reverse amplifier	Amps	3.77	0.27		
OIB	Amps			0.23	
iRPD Module	Amps	1.83		0.02	
Power supply DC current rating	Amps	6.2	1.0	1.3	0.8