CHAPTER 24

Configuring Flex Links and the MAC Address-Table Move Update Feature

This chapter describes how to configure Flex Links, a pair of interfaces on the IE 3010 switch that provide a mutual backup. It also describes how to configure the MAC address-table move update feature, also referred to as the Flex Links bidirectional fast convergence feature.

Note For complete syntax and usage information for the commands used in this chapter, see the command reference for this release.

The chapter consists of these sections:

- Understanding Flex Links and the MAC Address-Table Move Update, page 24-1
- Configuring Flex Links and the MAC Address-Table Move Update, page 24-7
- Monitoring Flex Links and the MAC Address-Table Move Update, page 24-15

Understanding Flex Links and the MAC Address-Table Move Update

This section contains this information:

- Flex Links, page 24-1
- VLAN Flex Link Load Balancing and Support, page 24-2
- Flex Link Multicast Fast Convergence, page 24-3
- MAC Address-Table Move Update, page 24-6

Flex Links

Flex Links are a pair of a Layer 2 interfaces (switch ports or port channels) where one interface is configured to act as a backup to the other. The feature provides an alternative solution to the Spanning Tree Protocol (STP). Users can disable STP and still retain basic link redundancy. Flex Links are typically configured in service provider or enterprise networks where customers do not want to run STP on the switch. If the switch is running STP, Flex Links is not necessary because STP already provides link-level redundancy or backup.

You configure Flex Links on one Layer 2 interface (the active link) by assigning another Layer 2 interface as the Flex Link or backup link. When one of the links is up and forwarding traffic, the other link is in standby mode, ready to begin forwarding traffic if the other link shuts down. At any given time, only one of the interfaces is in the linkup state and forwarding traffic. If the primary link shuts down, the standby link starts forwarding traffic. When the active link comes back up, it goes into standby mode and does not forward traffic. STP is disabled on Flex Link interfaces.

In Figure 24-1, ports 1 and 2 on switch A are connected to uplink switches B and C. Because they are configured as Flex Links, only one of the interfaces is forwarding traffic; the other is in standby mode. If port 1 is the active link, it begins forwarding traffic between port 1 and switch B; the link between port 2 (the backup link) and switch C is not forwarding traffic. If port 1 goes down, port 2 comes up and starts forwarding traffic to switch C. When port 1 comes back up, it goes into standby mode and does not forward traffic; port 2 continues forwarding traffic.

You can also choose to configure a preemption mechanism, specifying the preferred port for forwarding traffic. For example, in the example in Figure 24-1, you can configure the Flex Links pair with preemption mode. In the scenario shown, when port 1 comes back up and has more bandwidth than port 2, port 1 begins forwarding traffic after 60 seconds. Port 2 becomes the standby port. You do this by entering the interface configuration **switchport backup interface preemption mode bandwidth** and **switchport backup interface preemption delay** commands.

Figure 24-1 Flex Links Configuration Example

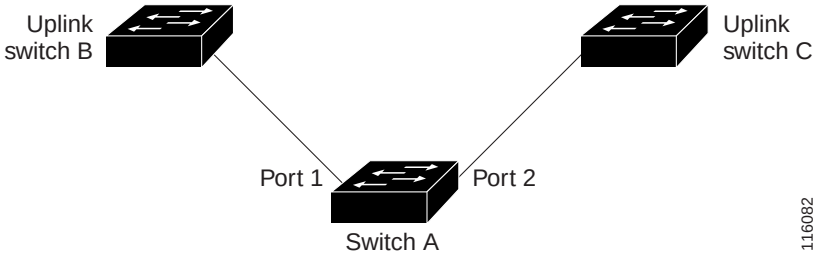

If a primary (forwarding) link goes down, a trap notifies the network management stations. If the standby link goes down, a trap notifies the users.

Flex Links are supported only on Layer 2 ports and port channels, not on VLANs or on Layer 3 ports.

VLAN Flex Link Load Balancing and Support

VLAN Flex Link load-balancing allows you to configure a Flex Link pair so that both ports simultaneously forward the traffic for some mutually exclusive VLANs. For example, if Flex Link ports are configured for 1-100 VLANs, the traffic of the first 50 VLANs can be forwarded on one port and the rest on the other port. If one of the ports fail, the other active port forwards all the traffic. When the failed port comes back up, it resumes forwarding traffic in the preferred VLANs. This way, apart from providing the redundancy, this Flex Link pair can be used for load balancing. Also, Flex Link VLAN load-balancing does not impose any restrictions on uplink switches.

Figure 24-2 VLAN Flex Links Load Balancing Configuration Example

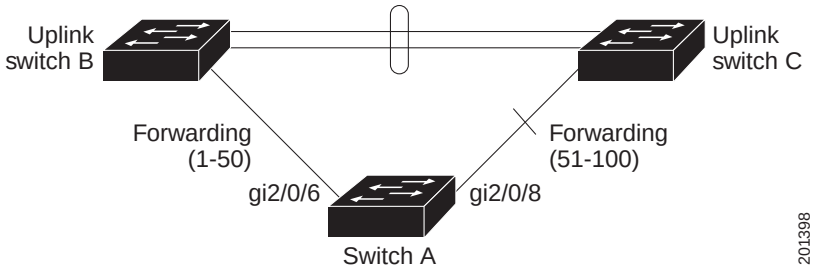

Flex Link Multicast Fast Convergence

Flex Link Multicast Fast Convergence reduces the multicast traffic convergence time after a Flex Link failure. This is implemented by a combination of these solutions:

- Learning the Other Flex Link Port as the mrouter Port, page 24-3
- Generating IGMP Reports, page 24-3
- Leaking IGMP Reports, page 24-4
- Configuration Examples, page 24-4

Learning the Other Flex Link Port as the mrouter Port

In a typical multicast network, there is a querier for each VLAN. A switch deployed at the edge of a network has one of its Flex Link ports receiving queries. Flex Link ports are also always forwarding at any given time.

A port that receives queries is added as an *mrouter* port on the switch. An mrouter port is part of all the multicast groups learned by the switch. After a changeover, queries are received by the other Flex Link port. The other Flex Link port is then learned as the mrouter port. After changeover, multicast traffic then flows through the other Flex Link port. To achieve faster convergence of traffic, both Flex Link ports are learned as mrouter ports whenever either Flex Link port is learned as the mrouter port. Both Flex Link ports are always part of multicast groups.

Though both Flex Link ports are part of the groups in normal operation mode, all traffic on the backup port is blocked. So the normal multicast data flow is not affected by the addition of the backup port as an mrouter port. When the changeover happens, the backup port is unblocked, allowing the traffic to flow. In this case, the upstream multicast data flows as soon as the backup port is unblocked.

Generating IGMP Reports

When the backup link comes up after the changeover, the upstream new distribution switch does not start forwarding multicast data, because the port on the upstream router, which is connected to the blocked Flex Link port, is not part of any multicast group. The reports for the multicast groups were not forwarded by the downstream switch because the backup link is blocked. The data does not flow on this port, until it learns the multicast groups, which occurs only after it receives reports.

The reports are sent by hosts when a general query is received, and a general query is sent within 60 seconds in normal scenarios. When the backup link starts forwarding, to achieve faster convergence of multicast data, the downstream switch immediately sends proxy reports for all the learned groups on this port without waiting for a general query.

Leaking IGMP Reports

To achieve multicast traffic convergence with minimal loss, a redundant data path must be set up before the Flex Link active link goes down. This can be achieved by leaking only IGMP report packets on the Flex Link backup link. These leaked IGMP report messages are processed by upstream distribution routers, so multicast data traffic gets forwarded to the backup interface. Because all incoming traffic on the backup interface is dropped at the ingress of the access switch, no duplicate multicast traffic is received by the host. When the Flex Link active link fails, the access switch starts accepting traffic from the backup link immediately. The only disadvantage of this scheme is that it consumes bandwidth on the link between the distribution switches and on the backup link between the distribution and access switches. This feature is disabled by default and can be configured by using the **switchport backup interface** *interface-id* **multicast fast-convergence** command.

When this feature has been enabled at changeover, the switch does not generate the proxy reports on the backup port, which became the forwarding port.

Configuration Examples

These are configuration examples for learning the other Flex Link port as the mrouter port when Flex Link is configured, with output for the **show interfaces switchport backup** command:

```
Switch# configure terminal
Enter configuration commands, one per line. End with CNTL/Z.
Switch(config)# interface FastEthernet0/1
Switch(config-if)# switchport mode trunk
Switch(config-if)# switchport backup interface FastEthernet0/2
Switch(config-if)# exit
Switch(config)# interface FastEthernet0/2
Switch(config-if)# switchport mode trunk
Switch(config-if)# end
Switch# show interfaces switchport backup detail
Switch Backup Interface Pairs:
Active Interface Backup Interface State
Preemption Mode : off
Multicast Fast Convergence : Off
Mac Address Move Update Vlan : auto
```

This output shows a querier for VLANs 1 and 401, with their queries reaching the switch through the specified port:

```
Switch# show ip igmp snooping querier
Vlan    IP Address     IGMP Version       Port
-----------------------------------------------------------
1       1.1.1.1        v2                 Fa0/1
401     41.41.41.1     v2                 Fa0/1
```

Here is output for the **show ip igmp snooping mrouter** command for VLANs 1 and 401:

```
Switch# show ip igmp snooping mrouter
Vlan    ports
----    -----
1       Fa0/1(dynamic), Fa0/2(dynamic)
401     Fa0/1(dynamic), Fa0/2(dynamic)
```

Similarly, both Flex Link ports are part of learned groups. In this example, FastEthernet0/1 is a receiver/host in VLAN 1, which is interested in two multicast groups:

```
Switch# show ip igmp snooping groups
Vlan    Group       Type    Version    Port List
------------------------------------------------------------------------
```

```
1       228.1.5.1  igmp    v2          Fa0/1, Fa0/2, Fa0/3
1       228.1.5.2  igmp    v2          Fa0/1, Fa0/2, Fa0/3
```

When a host responds to the general query, the switch forwards this report on all the mrouter ports. In this example, when a host sends a report for the group 228.1.5.1, it is forwarded only on FastEthernet0/1, because the backup port FastEthernet0/2 is blocked. When the active link, FastEthernet0/1, goes down, the backup port, FastEthernet0/2, begins forwarding.

As soon as this port starts forwarding, the switch sends proxy reports for the groups 228.1.5.1 and 228.1.5.2 on behalf of the host. The upstream router learns the groups and starts forwarding multicast data. This is the default behavior of Flex Link. This behavior changes when the user configures fast convergence using the **switchport backup interface FastEthernet0/2 multicast fast-convergence** command. This example shows how this feature is configured:

```
Switch# configure terminal
Enter configuration commands, one per line. End with CNTL/Z.
Switch(config)# interface FastEthernet0/1
Switch(config-if)# switchport backup interface FastEthernet0/2 multicast fast-convergence
Switch(config-if)# exit
Switch# show interfaces switchport backup detail

Switch Backup Interface Pairs:

Active Interface        Backup Interface        State
------------------------------------------------------------------------
FastEthernet0/1         FastEthernet0/2         Active Up/Backup Standby
        Preemption Mode  : off
        Multicast Fast Convergence  : Off
        Bandwidth : 100000 Kbit (Fa0/1), 100000 Kbit (Fa0/2)
        Mac Address Move Update Vlan : auto
```

This output shows a querier for VLAN 1 and 401 with their queries reaching the switch through the configured port:

```
Switch# show ip igmp snooping querier
Vlan       IP Address     IGMP Version   Port
-----------------------------------------------------------
1          1.1.1.1        v2             Fa0/1
401        41.41.41.1     v2             Fa0/1
```

This is output for the **show ip igmp snooping mrouter** command for VLAN 1 and 401:

```
Switch# show ip igmp snooping mrouter
Vlan       ports
----       -----
1          Fa0/1(dynamic), Fa0/2(dynamic)
401        Fa0/1(dynamic), Fa0/2(dynamic)
```

Similarly, both the Flex Link ports are a part of the learned groups. In this example, the port is a receiver/host in VLAN 1, which is interested in two multicast groups:

```
Switch# show ip igmp snooping groups
Vlan    Group      Type    Version    Port List
------------------------------------------------------------------------
1       228.1.5.1  igmp    v2         Fa0/1, Fa0/2, Fa0/3
1       228.1.5.2  igmp    v2         Fa0/1, Fa0/2, Fa0/3
```

Whenever a host responds to the general query, the switch forwards this report on all the mrouter ports. When you turn on this feature through the command-line port, and when a report is forwarded by the switch on the configured FastEthernet0/1, it is also leaked to the backup port FastEthernet0/2. The upstream router learns the groups and starts forwarding multicast data, which is dropped at the ingress

because the FastEthernet0/2 is blocked. When the active link, FastEthernet0/1goes down, the backup port, FastEthernet0/2, begins forwarding. You do not need to send any proxy reports because the multicast data is already being forwarded by the upstream router. By leaking reports to the backup port, a redundant multicast path has been set up, and the time taken for the multicast traffic convergence is minimal.

MAC Address-Table Move Update

The MAC address-table move update feature allows the switch to provide rapid bidirectional convergence when a primary (forwarding) link goes down and the standby link begins forwarding traffic.

In Figure 24-3, switch A is an access switch, and ports 1 and 2 on switch A are connected to uplink switches B and D through a Flex Link pair. Port 1 is forwarding traffic, and port 2 is in the backup state. Traffic from the PC to the server is forwarded from port 1 to port 3. The MAC address of the PC has been learned on port 3 of switch C. Traffic from the server to the PC is forwarded from port 3 to port 1.

If the MAC address-table move update feature is not configured and port 1 goes down, port 2 starts forwarding traffic. However, for a short time, switch C keeps forwarding traffic from the server to the PC through port 3, and the PC does not get the traffic because port 1 is down. If switch C removes the MAC address of the PC on port 3 and relearns it on port 4, traffic can then be forwarded from the server to the PC through port 2.

If the MAC address-table move update feature is configured and enabled on the switches in Figure 24-3 and port 1 goes down, port 2 starts forwarding traffic from the PC to the server. The switch sends a MAC address-table move update packet from port 2. Switch C gets this packet on port 4 and immediately learns the MAC address of the PC on port 4, which reduces the reconvergence time.

You can configure the access switch, switch A, to *send* MAC address-table move update messages. You can also configure the uplink switches B, C, and D to *get* and process the MAC address-table move update messages. When switch C gets a MAC address-table move update message from switch A, switch C learns the MAC address of the PC on port 4. Switch C updates the MAC address table, including the forwarding table entry for the PC.

Switch A does not need to wait for the MAC address-table update. The switch detects a failure on port 1 and immediately starts forwarding server traffic from port 2, the new forwarding port. This change occurs in 100 milliseconds (ms). The PC is directly connected to switch A, and the connection status does not change. Switch A does not need to update the PC entry in the MAC address table.

Figure 24-3 MAC Address-Table Move Update Example

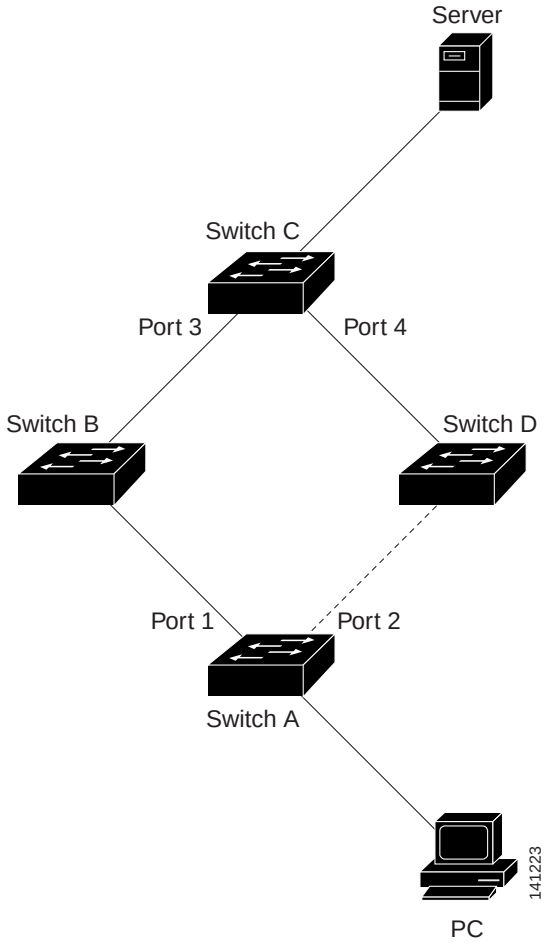

Configuring Flex Links and the MAC Address-Table Move Update

These sections contain this information:

- Default Configuration, page 24-8
- Configuration Guidelines, page 24-8
- Configuring Flex Links, page 24-9
- Configuring VLAN Load Balancing on Flex Links, page 24-11
- Configuring the MAC Address-Table Move Update Feature, page 24-12

Default Configuration

The Flex Links are not configured, and there are no backup interfaces defined.

The preemption mode is off.

The preemption delay is 35 seconds.

The MAC address-table move update feature is not configured on the switch.

Configuration Guidelines

Follow these guidelines to configure Flex Links:

- You can configure up to 16 backup links.
- You can configure only one Flex Link backup link for any active link, and it must be a different interface from the active interface.
- An interface can belong to only one Flex Link pair. An interface can be a backup link for only one active link. An active link cannot belong to another Flex Link pair.
- Neither of the links can be a port that belongs to an EtherChannel. However, you can configure two port channels (EtherChannel logical interfaces) as Flex Links, and you can configure a port channel and a physical interface as Flex Links, with either the port channel or the physical interface as the active link.
- A backup link does not have to be the same type (Fast Ethernet, Gigabit Ethernet, or port channel) as the active link. However, you should configure both Flex Links with similar characteristics so that there are no loops or changes in behavior if the standby link begins to forward traffic.
- STP is disabled on Flex Link ports. A Flex Link port does not participate in STP, even if the VLANs present on the port are configured for STP. When STP is not enabled, be sure that there are no loops in the configured topology. Once the Flex Link configurations are removed, STP is re-enabled on the ports.

Follow these guidelines to configure VLAN load balancing on the Flex Links feature:

- For Flex Link VLAN load balancing, you must choose the preferred VLANs on the backup interface.
- You cannot configure a preemption mechanism and VLAN load balancing for the same Flex Links pair.

Follow these guidelines to configure the MAC address-table move update feature:

- You can enable and configure this feature on the access switch to *send* the MAC address-table move updates.
- You can enable and configure this feature on the uplink switches to *receive* the MAC address-table move updates.

Configuring Flex Links

Beginning in privileged EXEC mode, follow these steps to configure a pair of Flex Links:

	Command	Purpose
Step 1	**configure terminal**	Enter global configuration mode.
Step 2	**interface** *interface-id*	Specify the interface, and enter interface configuration mode. The interface can be a physical Layer 2 interface or a port channel (logical interface). The port-channel range is 1 to 48.
Step 3	**switchport backup interface** *interface-id*	Configure a physical Layer 2 interface (or port channel) as part of a Flex Link pair with the interface. When one link is forwarding traffic, the other interface is in standby mode.
Step 4	**end**	Return to privileged EXEC mode.
Step 5	**show interfaces** [*interface-id*] **switchport backup**	Verify the configuration.
Step 6	**copy running-config startup config**	(Optional) Save your entries in the switch startup configuration file.

To disable a Flex Link backup interface, use the **no switchport backup interface** *interface-id* interface configuration command.

This example shows how to configure an interface with a backup interface and to verify the configuration:

```
Switch# configure terminal
Switch(conf)# interface gigabitethernet0/1
Switch(conf-if)# switchport backup interface gigabitethernet0/2
Switch(conf-if)# end

Switch# show interfaces switchport backup
Switch Backup Interface Pairs:

Active Interface        Backup Interface        State
------------------------------------------------------------------------
Vlans Preferred on Active Interface: 1-3,5-4094
        Vlans Preferred on Backup Interface: 4
```

Beginning in privileged EXEC mode, follow these steps to configure a preemption scheme for a pair of Flex Links:

	Command	Purpose
Step 1	**configure terminal**	Enter global configuration mode.
Step 2	**interface** *interface-id*	Specify the interface, and enter interface configuration mode. The interface can be a physical Layer 2 interface or a port channel (logical interface). The port-channel range is 1 to .

	Command	Purpose
Step 3	**switchport backup interface** *interface-id*	Configure a physical Layer 2 interface (or port channel) as part of a Flex Links pair with the interface. When one link is forwarding traffic, the other interface is in standby mode.
Step 4	**switchport backup interface** *interface-id* **preemption mode** [**forced** | **bandwidth** | **off**]	Configure a preemption mechanism and delay for a Flex Link interface pair. You can configure the preemption as: • Forced—the active interface always preempts the backup. • Bandwidth—the interface with the higher bandwidth always acts as the active interface. • Off—no preemption happens from active to backup.
Step 5	**switchport backup interface** *interface-id* **preemption delay** *delay-time*	Configure the time delay until a port preempts another port. **Note** Setting a delay time only works with forced and bandwidth modes.
Step 6	**end**	Return to privileged EXEC mode.
Step 7	**show interfaces** [*interface-id*] **switchport backup**	Verify the configuration.
Step 8	**copy running-config startup config**	(Optional) Save your entries in the switch startup configuration file.

To remove a preemption scheme, use the **no switchport backup interface** *interface-id* **preemption mode** interface configuration command. To reset the delay time to the default, use the **no switchport backup interface** *interface-id* **preemption delay** interface configuration command.

This example shows how to configure the preemption mode as *forced* for a backup interface pair and to verify the configuration:

```
Switch# configure terminal
Switch(conf)# interface gigabitethernet0/1
Switch(conf-if)#switchport backup interface gigabitethernet0/2 preemption mode forced
Switch(conf-if)#switchport backup interface gigabitethernet0/2 preemption delay 50
Switch(conf-if)# end

Switch# show interfaces switchport backup detail
Active Interface Backup Interface State
----------------------------------------------------------------------
GigabitEthernet0/21 GigabitEthernet0/2 Active Up/Backup Standby
Interface Pair : Gi0/1, Gi0/2
Preemption Mode : forced
Preemption Delay : 50 seconds
Bandwidth : 100000 Kbit (Gi0/1), 100000 Kbit (Gi0/2)
Mac Address Move Update Vlan : auto
```

Configuring VLAN Load Balancing on Flex Links

Beginning in privileged EXEC mode, follow these steps to configure VLAN load balancing on Flex Links:

	Command	Purpose
Step 1	**configure terminal**	Enter global configuration mode.
Step 2	**interface** *interface-id*	Specify the interface, and enter interface configuration mode. The interface can be a physical Layer 2 interface or a port channel (logical interface). The port-channel range is 1 to 48.
Step 3	**switchport backup interface** *interface-id* ***prefer vlan*** *vlan-range*	Configure a physical Layer 2 interface (or port channel) as part of a Flex Links pair with the interface, and specify the VLANs carried on the interface. The VLAN ID range is 1 to 4094.
Step 4	**end**	Return to privileged EXEC mode.
Step 5	**show interfaces** [*interface-id*] **switchport backup**	Verify the configuration.
Step 6	**copy running-config startup config**	(Optional) Save your entries in the switch startup configuration file.

To disable the VLAN load balancing feature, use the **no switchport backup interface** *interface-id* **prefer vlan** *vlan-range* interface configuration command.

In the following example, VLANs 1 to 50, 60, and 100 to 120 are configured on the switch:

```
Switch(config)# interface gigabitethernet 0/6
Switch(config-if)# switchport backup interface gigabitethernet 0/8 prefer vlan 60,100-120
```

When both interfaces are up, GigabitEthernet0/8 forwards traffic for VLANs 60 and 100 to 120, and GigabitEthernet forwards traffic for VLANs 1 to 50.

```
Switch# show interfaces switchport backup
Switch Backup Interface Pairs:

Active Interface        Backup Interface        State
------------------------------------------------------------------------
GigabitEthernet0/6    GigabitEthernet0/8    Active Up/Backup Standby
Vlans Preferred on Active Interface: 1-50
Vlans Preferred on Backup Interface: 60, 100-120
```

When a Flex Link interface goes down (LINK_DOWN), VLANs preferred on this interface are moved to the peer interface of the Flex Link pair. In this example, if interface Gigabit Ethernet goes down, Gigabit Ethernet carries all VLANs of the Flex Link pair.

```
Switch# show interfaces switchport backup
Switch Backup Interface Pairs:

Active Interface        Backup Interface        State
------------------------------------------------------------------------
GigabitEthernet0/6    GigabitEthernet0/8    Active Down/Backup Up

Vlans Preferred on Active Interface: 1-50
Vlans Preferred on Backup Interface: 60, 100-120
```

When a Flex Link interface comes up, VLANs preferred on this interface are blocked on the peer interface and moved to the forwarding state on the interface that has just come up. In this example, if interface Gigabit Ethernet0/6 comes up, VLANs preferred on this interface are blocked on the peer interface Gigabit Ethernet0/8 and forwarded on Gigabit Ethernet0/6.

```
Switch# show interfaces switchport backup
Switch Backup Interface Pairs:

Active Interface        Backup Interface        State
------------------------------------------------------------------------
GigabitEthernet0/6    GigabitEthernet0/8    Active Down/Backup Up

Vlans Preferred on Active Interface: 1-50
Vlans Preferred on Backup Interface: 60, 100-120

Switch# show interfaces switchport backup detail
Switch Backup Interface Pairs:

Active Interface        Backup Interface        State
------------------------------------------------------------------------
FastEthernet0/3       FastEthernet0/4       Active Down/Backup Up

Vlans Preferred on Active Interface: 1-2,5-4094
Vlans Preferred on Backup Interface: 3-4
Preemption Mode  : off
Bandwidth : 10000 Kbit (Fa0/3), 100000 Kbit (Fa0/4)
Mac Address Move Update Vlan : auto
```

Configuring the MAC Address-Table Move Update Feature

This section contains this information:

- Configuring a switch to send MAC address-table move updates
- Configuring a switch to get MAC address-table move updates

Beginning in privileged EXEC mode, follow these steps to configure an access switch to send MAC address-table move updates:

	Command	Purpose
Step 1	**configure terminal**	Enter global configuration mode.
Step 2	**interface** *interface-id*	Specify the interface, and enter interface configuration mode. The interface can be a physical Layer 2 interface or a port channel (logical interface). The port-channel range is 1 to .
Step 3	**switchport backup interface** *interface-id* or **switchport backup interface** *interface-id* **mmu primary vlan** *vlan-id*	Configure a physical Layer 2 interface (or port channel), as part of a Flex Link pair with the interface. The MAC address-table move update VLAN is the lowest VLAN ID on the interface. Configure a physical Layer 2 interface (or port channel) and specify the VLAN ID on the interface, which is used for sending the MAC address-table move update. When one link is forwarding traffic, the other interface is in standby mode.

	Command	Purpose
Step 4	**end**	Return to global configuration mode.
Step 5	**mac address-table move update transmit**	Enable the access switch to send MAC address-table move updates to other switches in the network if the primary link goes down and the switch starts forwarding traffic through the standby link.
Step 6	**end**	Return to privileged EXEC mode.
Step 7	**show mac address-table move update**	Verify the configuration.
Step 8	**copy running-config startup config**	(Optional) Save your entries in the switch startup configuration file.

To disable the MAC address-table move update feature, use the **no mac address-table move update transmit** interface configuration command. To display the MAC address-table move update information, use the **show mac address-table move update** privileged EXEC command.

This example shows how to configure an access switch to send MAC address-table move update messages:

```
Switch(conf)# interface gigabitethernet0/1
Switch(conf-if)# switchport backup interface gigabitethernet0/2 mmu primary vlan 2
Switch(conf-if)# exit
Switch(conf)# mac address-table move update transmit
Switch(conf)# end
```

This example shows how to verify the configuration:

```
Switch# show mac-address-table move update
Switch-ID : 010b.4630.1780
Dst mac-address : 0180.c200.0010
Vlans/Macs supported : 1023/8320
Default/Current settings: Rcv Off/On, Xmt Off/On
Max packets per min : Rcv 40, Xmt 60
Rcv packet count : 5
Rcv conforming packet count : 5
Rcv invalid packet count : 0
Rcv packet count this min : 0
Rcv threshold exceed count : 0
Rcv last sequence# this min : 0
Rcv last interface : Po2
Rcv last src-mac-address : 000b.462d.c502
Rcv last switch-ID : 0403.fd6a.8700
Xmt packet count : 0
Xmt packet count this min : 0
Xmt threshold exceed count : 0
Xmt pak buf unavail cnt : 0
Xmt last interface : None
```

Beginning in privileged EXEC mode, follow these steps to configure a switch to get and process MAC address-table move update messages:

	Command	Purpose
Step 1	**configure terminal**	Enter global configuration mode.
Step 2	**mac address-table move update receive**	Enable the switch to get and process the MAC address-table move updates.
Step 3	**end**	Return to privileged EXEC mode.
Step 4	**show mac address-table move update**	Verify the configuration.
Step 5	**copy running-config startup config**	(Optional) Save your entries in the switch startup configuration file.

To disable the MAC address-table move update feature, use the **no mac address-table move update receive** configuration command. To display the MAC address-table move update information, use the **show mac address-table move update** privileged EXEC command.

This example shows how to configure a switch to get and process MAC address-table move update messages:

```
Switch# configure terminal
Switch(conf)# mac address-table move update receive
Switch(conf)# end
```

Monitoring Flex Links and the MAC Address-Table Move Update

Table 24-1 shows the privileged EXEC commands for monitoring the Flex Links configuration and the MAC address-table move update information.

Table 24-1 Flex Links and MAC Address-Table Move Update Monitoring Commands

Command	Purpose
show interfaces [*interface-id*] **switchport backup**	Displays the Flex Link backup interface configured for an interface or all the configured Flex Links and the state of each active and backup interface (up or standby mode). When VLAN load balancing is enabled, the output displays the preferred VLANS on Active and Backup interfaces.
show mac address-table move update	Displays the MAC address-table move update information on the switch.