Installing Field Replaceable Units

Installing a Power Supply

Power Supply Overview

The switch chassis has two slots in which you can install power supplies using any of the following combinations:

- Two AC, two DC or AC-DC power supplies
- One AC-input power supply or one DC-input power supply (leaving the blank cover on the other slot)

Note If you leave any power supply slots empty, you must ensure that the blank cover (Part Number PWR-C6-BLANK) is installed in that slot to maintain the designed airflow.

This table lists the power supply models. To understand about the power supply modules supported on different switch models, see Power Supply Slots.

Part Number	Description
C9K-PWR-1500WAC	1500W AC Power Supply
C9K-PWR-1500WDC	1500W DC Power Supply

Figure 1: Cisco Catalyst 1500W AC Input Power Supply

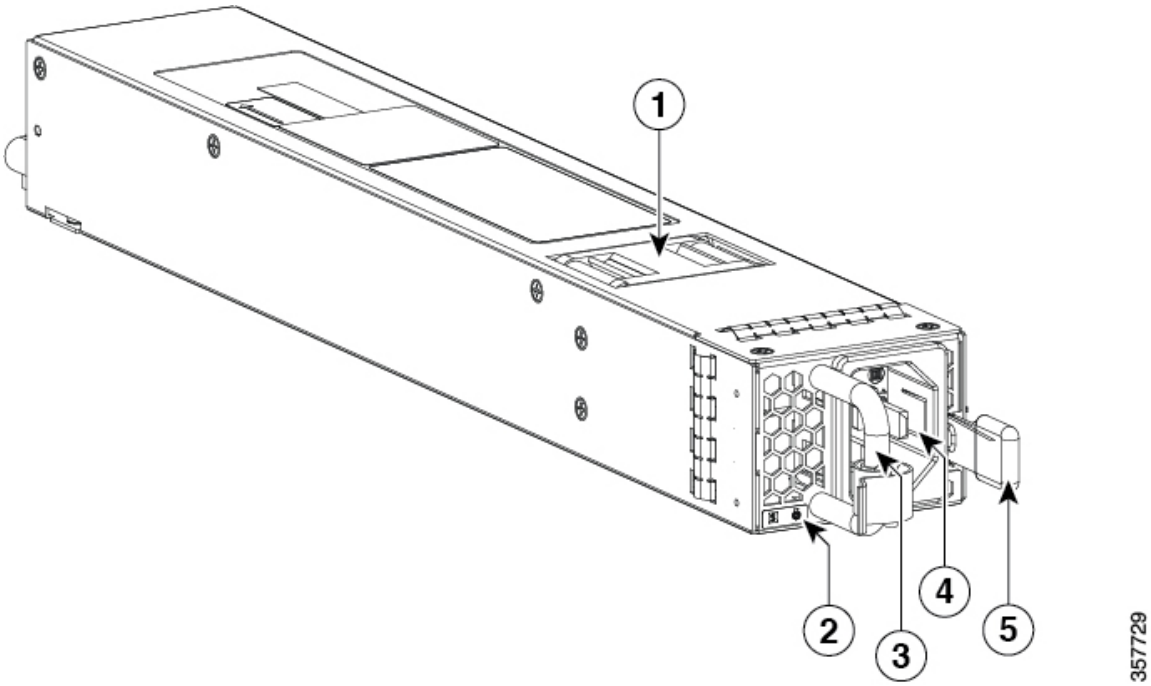

1	PSU fan	4	AC input connector
2	PSU LED	5	Release latch
3	Release handle	-	-

Figure 2: Cisco Catalyst 1500W DC Input Power Supply

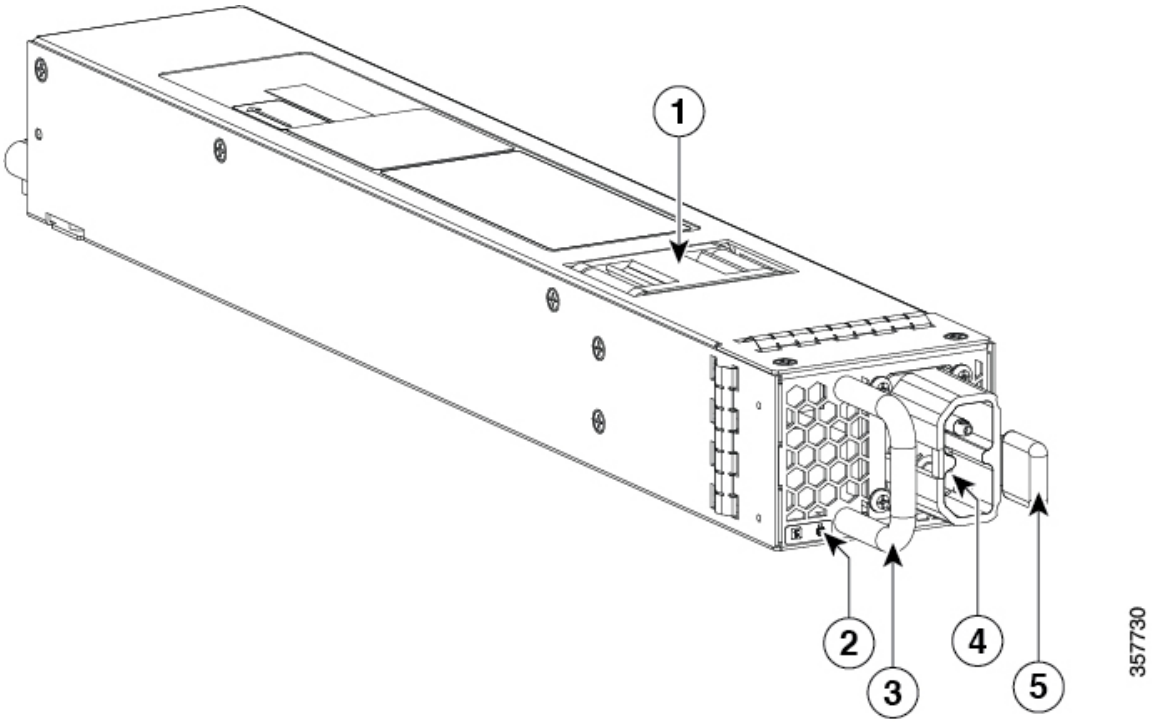

1	PSU fan	4	DC input connector
2	PSU LED	5	Release latch
3	Release handle	-	-

Figure 3: Power Supply Slot Cover for Cisco Catalyst 9500X Series Switches

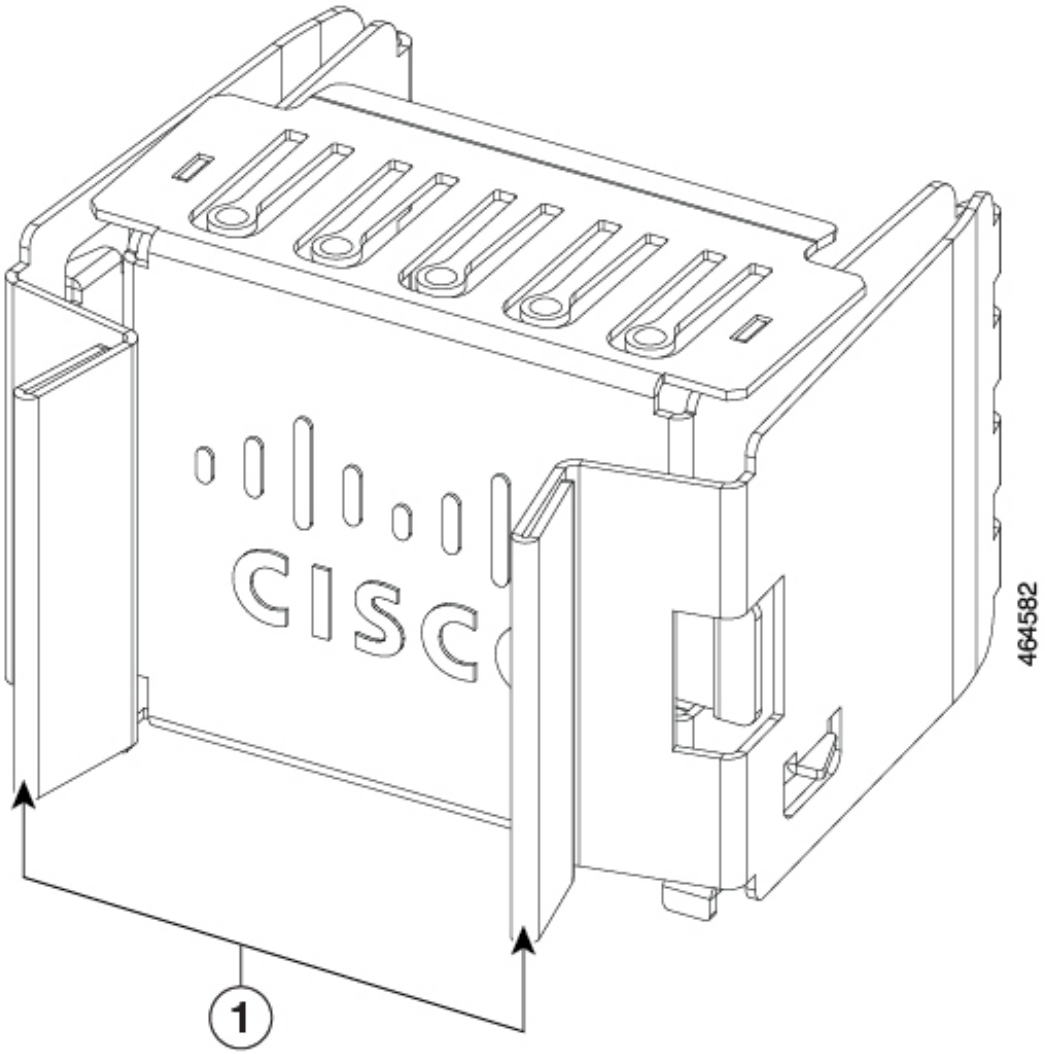

1	Release handles

The power supplies can work together in Redundant Mode, in which each power supply operates at approximately 50 percent of its capacity, no greater than 60 percent and no less than 40 percent. If one power supply fails, the other power supply can provide power for the entire system on its own. This is the default and recommended mode.

Power supply modules LED

The AC and DC power supply modules have the following LEDs:

- Green indicating the power status
- Red indicating the power supply failure

- Amber indicating a warning

Table 1: LEDs on the AC/DC power supply modules

LED	Status	Description
Unlit	Off	No input power.
Green	Blinking	AC is present; 3.3 VSB (Voltage Standby) is on. Power supply unit is off.
	Solid	Power supply is functioning normally.
Amber	Blinking	Warning detected. Power supply continues to operate. High temperature, high power and slow fan conditions.
Red	Solid	Power supply failure. This may be due to excessive voltage, excessive current, excessive temperature, output ORING FET fault and fan failure.

Installation Guidelines

- The switch chassis must be installed in a cabinet or rack that is secured to the data center.
- Remove the power supply from its shipping container and remove any packaging.
- You need the following additional tools and equipment:
  - Nut driver attachment for number 1 Phillips-head screwdriver or ratchet wrench with torque capability (used only for DC-input power supplies).
  - Grounding wire — Size this wire to meet local and national installation requirements. For U.S. installations, you must use an 8-14 AWG copper conductor for AC power supply systems. For installations outside the U.S., consult your local and national electrical codes. The length of the grounding wire depends on the proximity of the switch to proper grounding facilities.
- The chassis is connected to an earth ground.
- You have receptacles for the power sources within reach of the power supply cables.
- If you are connecting to a DC power, check that you are using power cables to connect to the power supply. The wire size applies to the negative [-], and positive [+] cables that connect to negative and positive apertures on the connector. You have to procure the power cable.
- If you are installing more than one DC-input power supply, each must be protected by a dedicated circuit breaker or a fuse that is sized according to the power supply input rating and the local or national electrical code requirements.
- The power sources are rated as follows:
  - For North American AC-input installations—16A with 110V circuits.

- For North American DC-input installations—(–48 VDC nominal at 37 A in North America (operating range: –40.5 to –56 VDC).
- For international installations—Size the circuits by local and national standards.

- The power supply is already inserted into the chassis.

Caution Ensure that the power source is OFF. As an added precaution, place the appropriate safety flag and lockout devices at the source power circuit breaker, or place a piece of adhesive tape over the circuit breaker handle to prevent accidental power restoration while you are working on the circuit.

Warning Before performing any of the following procedures, ensure that power is removed from the DC circuit. Statement 1003

Installing Power Supply

Inserting the Power Supply

To insert the power supply into the chassis, follow these steps:

Procedure

Step 1 Remove the blank cover and store it for future use.

Step 2 Verify that the power supply is not connected to any power sources.

Step 3 Hold the handle on the power supply with one hand and position the power supply with its back end at the open power supply bay. See the figure for an example (AC power supply is shown as an example, DC power supply can be installed in the same way).

Step 4 Slide the unit all the way into the power supply bay until the release latch on the front of the power supply clicks and prevents you from moving the power supply in or out of the chassis.

Note Ensure that the power supply in inserted into the slot in the right direction. . If you have inserted the power supply in the reverse direction, the power supply will not be seated correctly and it projects out of the slot.

Figure 4: Installing the Power Supply

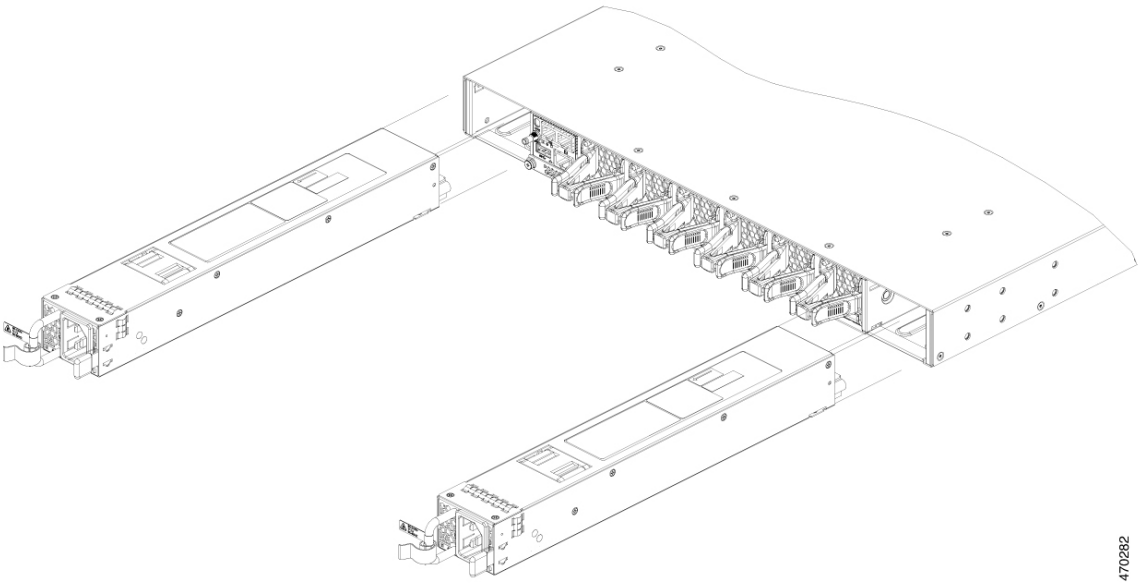

Connecting to the Power Source

Each power cable is shipped with mating connectors with one of the connectors on the power socket and the other connector on the front panel of the power supply. You follow the same steps to install the AC-input and DC-input power supplies, but you must ground them differently.

- AC-input power supply—It is automatically grounded when you connect its power cable to the power supply and the power source.
- DC-input power supply—You do not connect the power supply directly to the earth ground.

You use one power cord for each power supply to connect the power supply to its power source.

Connecting to an AC Power Source

To connect to a power source, follow these steps:

Warning Take care when connecting units to the supply circuit so that wiring is not overloaded. Statement 1018

Procedure

Step 1 Prior to connecting the power supply to a power source, ensure that the chassis is properly grounded.

Step 2 Plug the power cable into the power supply.

Step 3 Plug the other end of the power cable into a power source supplied by the data center.

Note When using redundant mode, connect each power supply to a separate power source.

Step 4 Verify that the power supply is receiving power by checking that the LED is on and is amber or red. For more information about the power supply LEDs and the conditions that they indicate, see Power Supply LEDs.

When you first activate the power supply, you can verify the functionality of the LED by checking that LED turns on for a couple of seconds. If the LED is flashing amber or red, check the power connections on the power supply and the power source.

Connecting to a DC Power Source

To connect the DC power supply directly to one or two DC power sources, follow these steps:

Warning Before performing any of the following procedures, ensure that power is removed from the DC circuit.**Statement 1003**

Warning Hazardous voltage or energy may be present on DC power terminals. Always replace cover when terminals are not in service. Be sure uninsulated conductors are not accessible when cover is in place. **Statement 1075.**

Procedure

Step 1 Prior to connecting the power supply to a power source, ensure that the chassis is properly grounded.

Step 2 Plug the DC power cable into the DC power supply.

Step 3 Turn off the power at the circuit breakers for the portions of the DC grid power that you are connecting to and verify that all of the LEDs on the DC grid power supplies are off.

Step 4 Install the two cables from the DC power cable to a DC power source as follows:

a. If the unconnected end of each power cable is not stripped off of its insulation for the last 0.75 inches (19 mm), use wire strippers to remove that amount of insulation.

b. Attach the negative cables to the negative terminals of a DC power source, and attach the positive cables to the positive terminals of the same power source.

Step 5 Verify that the power supply is receiving power by checking that the LED is on and is amber or red. For more information about the power supply LEDs and the conditions that they indicate, see Power Supply LEDs.

When you first activate the power supply, you can verify the functionality of the LED by checking that LED turns on for a couple of seconds. If the LED is flashing amber or red, check the power connections on the power supply and the power source.

Removing Power Supplies

Procedure

Step 1 Turn off the power to the power supply that you are removing, as follows:

If you are removing a DC-input power supply, ensure that the power is turned off at the power source by turning off the power for that circuit.

Step 2 Detach the power and ground cables, as follows:

- For the AC-input power supply, unplug the power cables that are attached to the power supply and the power source.
- For the DC-input power supply, remove the power cables from the power supply and the power source.

Step 3 Remove the power supply from the chassis, as follows:

a) Press the ejector latch on the right of the power supply.
b) Pull the power supply partially out of the slot by its handle.
c) Pull the power supply fully from the slot.

Caution If you intend to operate the switch without installing another power supply in the empty slot, then you must reinstall the blank cover over the empty power supply slot to ensure proper air flow in the system and for safety reasons.

Finding the Serial Number

If you contact Cisco Technical Assistance, you need to know the serial number. These figures show where the serial number is located. You can also use the **show inventory** EXEC command to see the serial number.

Figure 5: Serial Number on the Power Supply

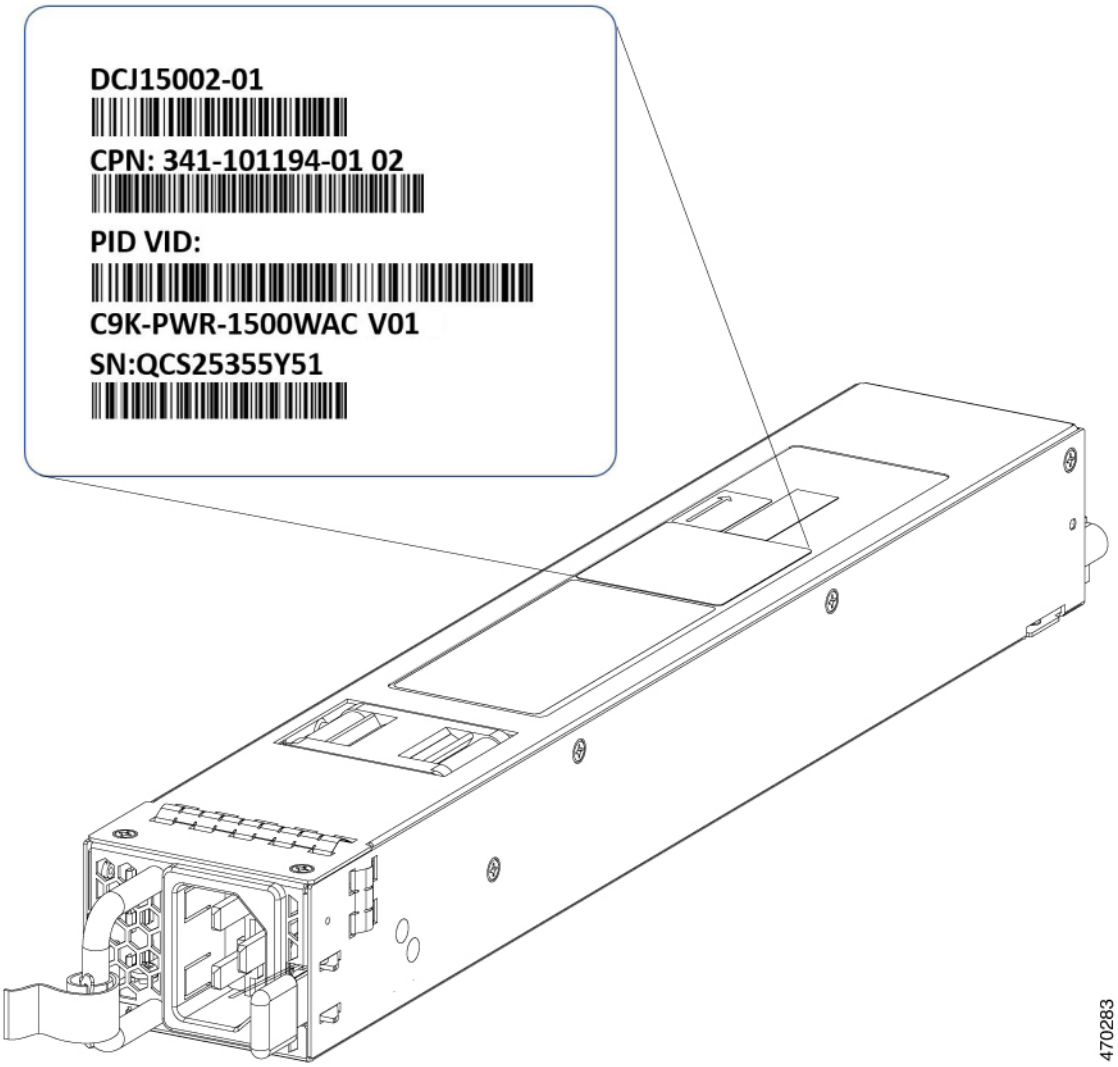

Installing a Fan Module

Fan Module Overview

Six individual fan modules are available. The switch can operate with five operational fans and one nonfunctional fan. Any failed fan should be replaced as soon as possible to avoid service interruption due to a second fan fault.

For the switch to boot-up, ensure the following conditions are met.

- the switches using C9500X-FAN-1U-R or C9500X-FAN-1U-F modules must at a minimum have 5 fans operating normally

If the switch fails to meet the minimum number of required fans, the switch shuts down automatically to prevent the system from overheating.

Part Number	Supported Switches	Description
C9500X-FAN-1U-R	C9500X-28C8D C9500X-60L4D	• Each switch contains six field-replaceable fans with variable-speed operating in N+1 redundancy mode. • Provides support for front-to-back airflow and back-to-front airflow fans. By default, the switch provides front-to-back airflow fan. Note the following usage guidelines: • -R in the part number indicates reverse airflow (front-to-back) and -F indicates forward airflow (back-to-front). • All the fan modules used in the switch must have the same airflow direction. • To change the airflow direction in the unit, ensure that you change all the fan modules to the same type of airflow support. For example, to change to forward airflow, replace all the six fans with C9500X-FAN-1U-F. After replacing all the fan modules, power cycle the unit manually.
C9500X-FAN-1U-F		

C9500X-FAN-1U-R or C9500X-FAN-1U-F

Figure 6: Fan Tray Unit with Dual-Stacked Fans

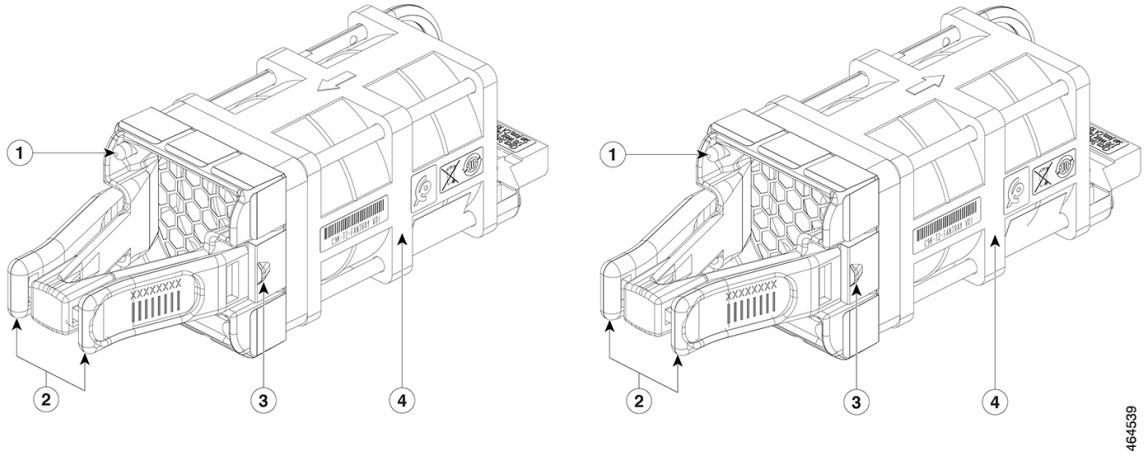

1	Fan LED	3	Fan assembly retention latch
2	Fan assembly levers C9500X-FAN-1U-R has a red-colored lever C9500X-FAN-1U-F has a blue-colored lever	4	Fan

Installation Guidelines

Observe these guidelines when removing or installing a fan module:

- Do not force the fan module into the slot. This can damage the pins on the switch if they are not aligned with the module.
- A fan module that is only partially connected to the switch can disrupt the system operation.
- The switch supports hot swapping of the fan module. You can remove and replace the module without interrupting normal switch operation.
- All fan modules should be of the same model (C9500X-FAN-1U-R or C9500X-FAN-1U-F). Installation of mixed type of fan modules is not supported.

Warning Only trained and qualified personnel should be allowed to install, replace, or service this equipment. Statement 1030

Installing a Fan Module

Procedure

Step 1 Pinch the fan module release handle and slide the module out.

Caution You should replace the fan module within 5 minutes to avoid overheating the switch.

Step 2 Install the fan module in the fan slot, and firmly push it into the slot, applying pressure to the end of the module, not the extraction handles. When correctly inserted, the fan module is flush with the switch rear panel. When the fan is operating, a green LED is on in the top left corner of the fan.

Warning Do not reach into a vacant slot when installing or removing a module. Exposed circuitry is an energy hazard. Statement 206

Figure 7: Installing the Fan Module on Cisco Catalyst 9500X Series Switch

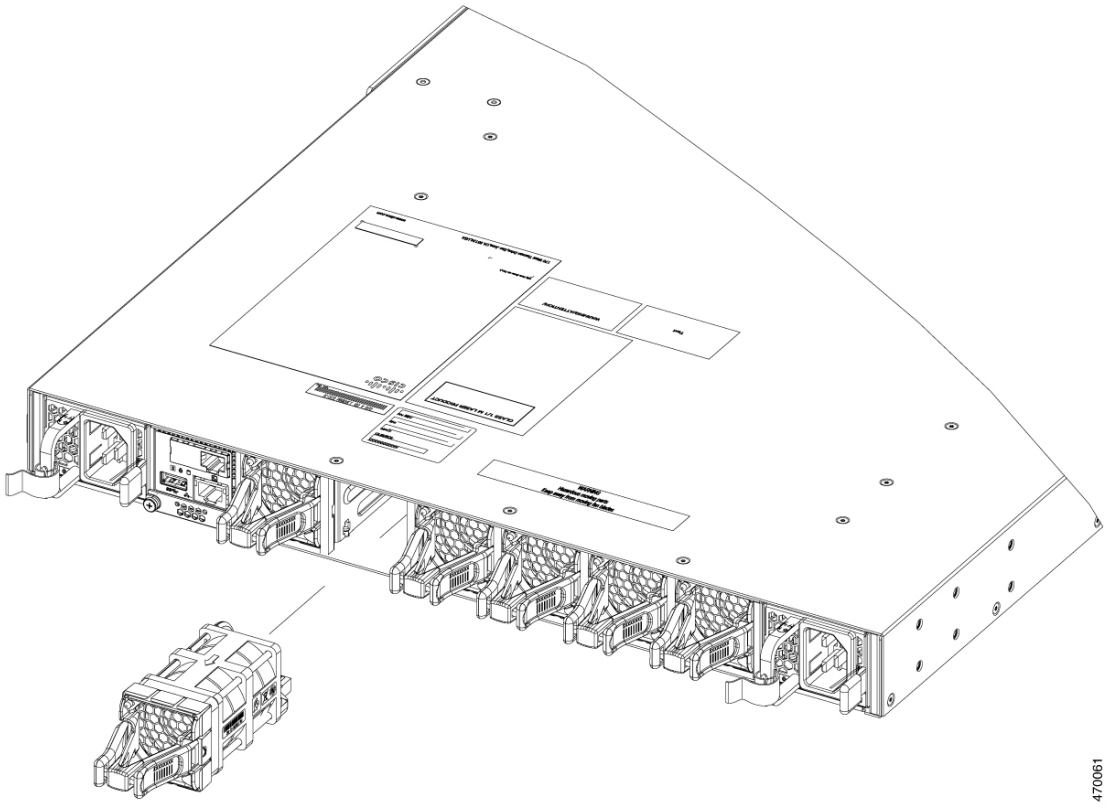

Finding the Fan Module Serial Number

If you contact Cisco Technical Assistance regarding a fan module, you need to know the fan module serial number. See the following illustration to find the serial number.

Figure 8: Fan Module Serial Number

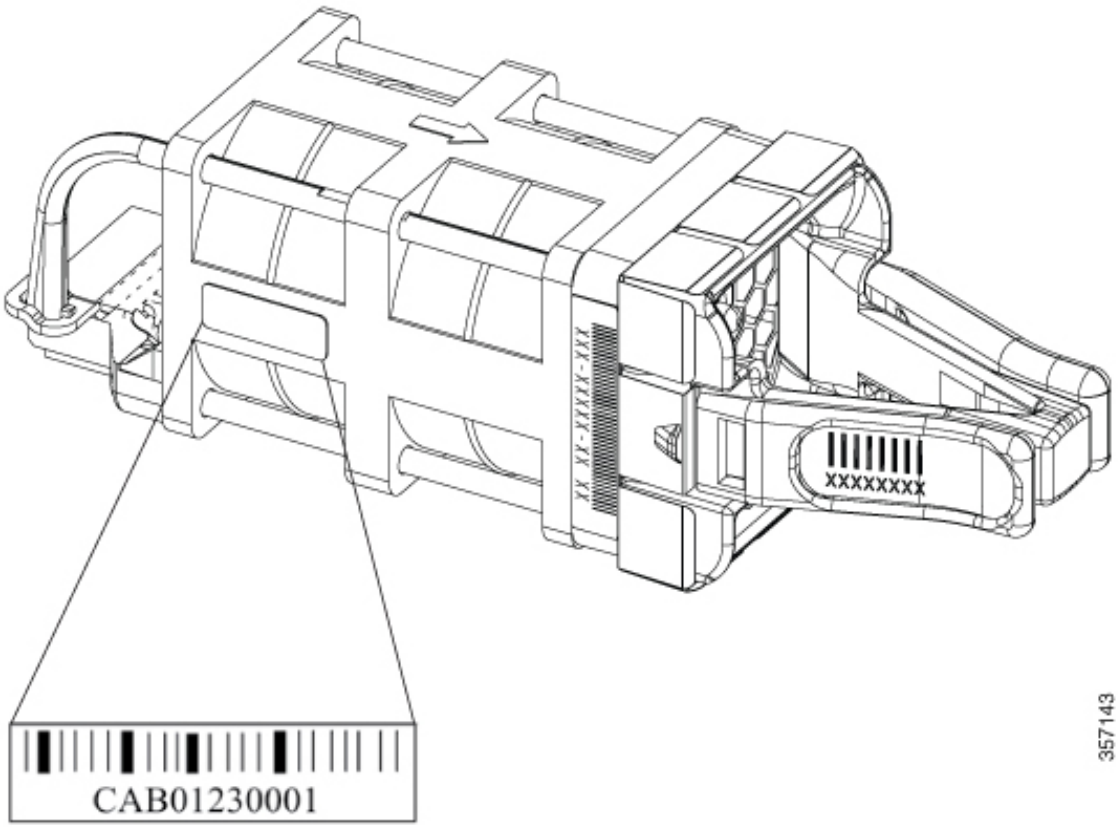

Installing an SSD Module

SATA SSD Module Overview

SATA SSD module is available as a field-replaceable unit (FRU). The SSD module does not support hot-swapping. Power off the switch before removing or installing an SSD module.

Figure 9: SSD Supported on Cisco Catalyst 9500X Series Switches

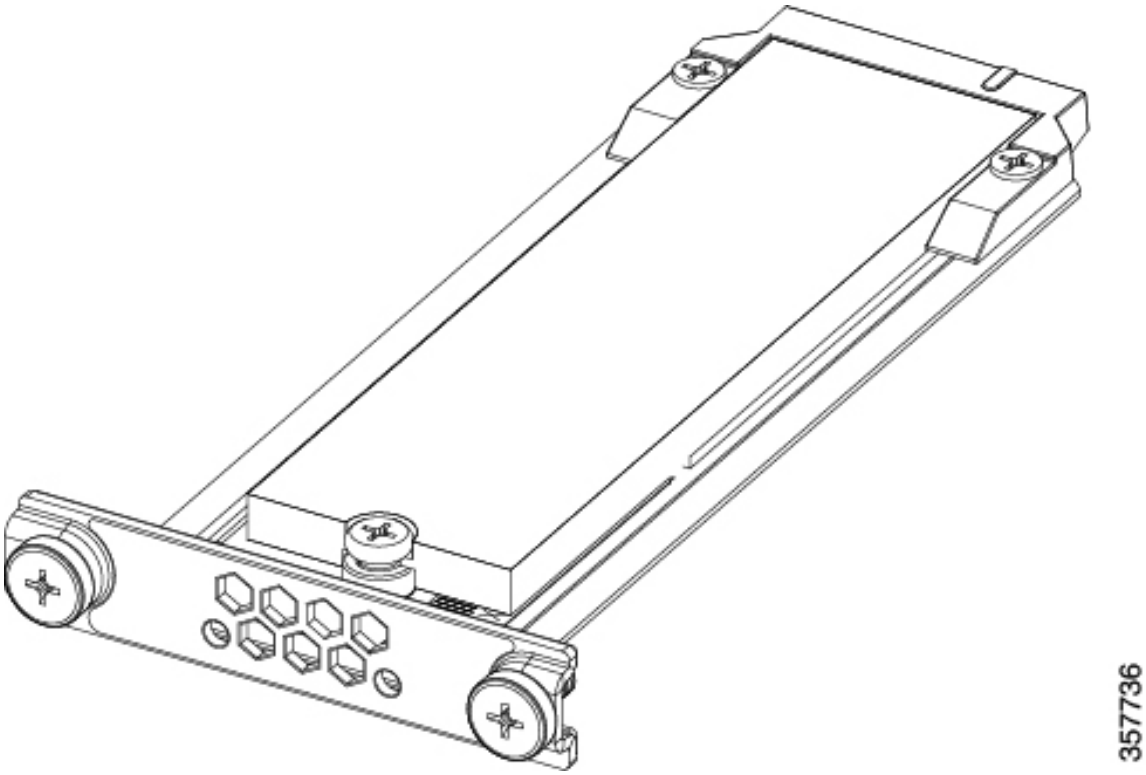

The following table lists the SSD modules supported on Cisco Catalyst 9500X Series Switches.

SSD Module	Description
C9K-F3-SSD-240GB=	Cisco pluggable SSD storage – 240 GB
C9K-F3-SSD-480GB=	Cisco pluggable SSD storage – 480 GB
C9K-F3-SSD-960GB=	Cisco pluggable SSD storage – 960 GB

Installing an SSD Module

Before you begin

Ensure that the switch is powered off.

Procedure

Step 1 Remove the blank cover on the SSD module slot on the switch and store it for future use.

Step 2 Insert the SSD module into the USB 3.0 SSD module slot, and firmly push it into the slot.

Figure 10: Installing an SSD Module on a Cisco Catalyst 9500X Series Switch

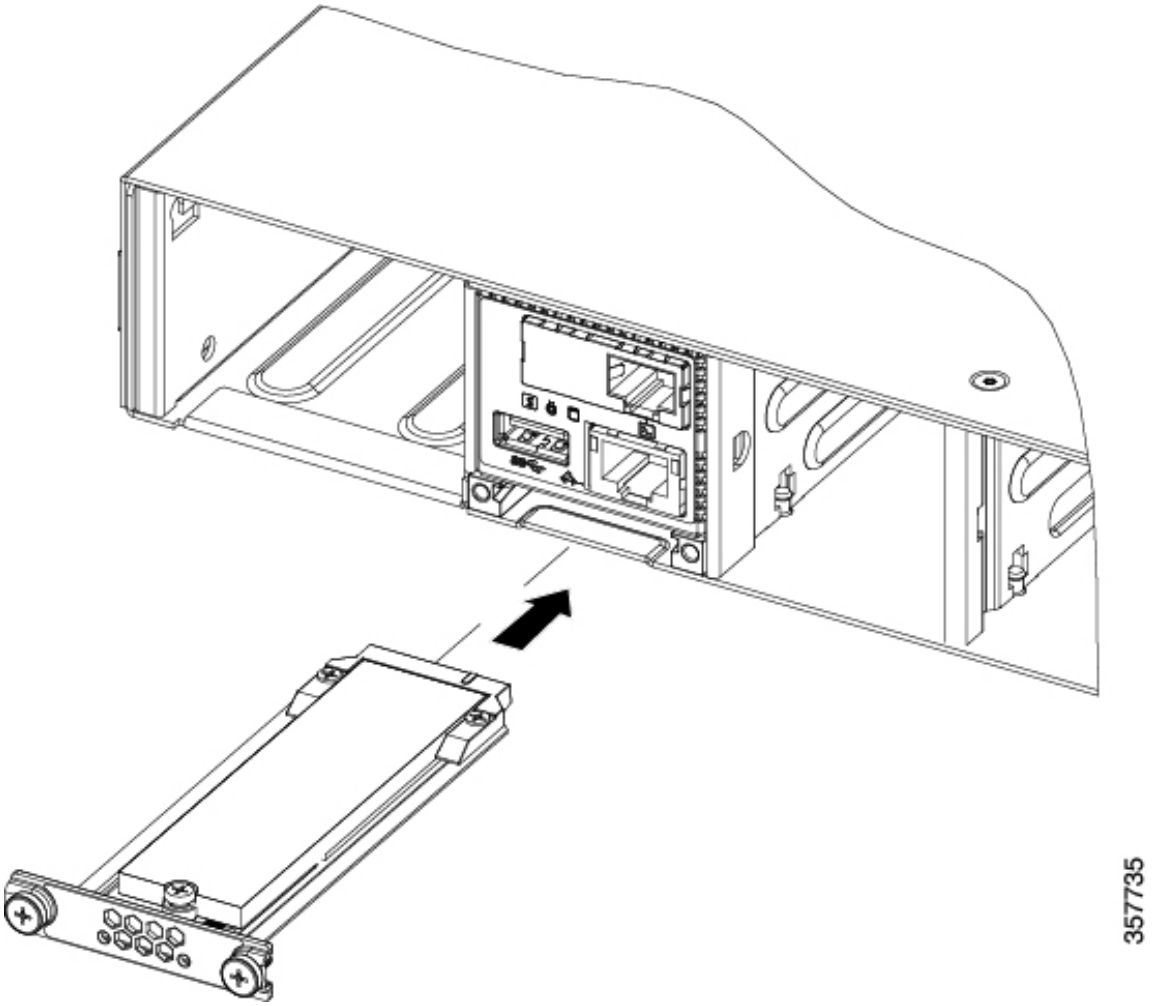

Step 3 Secure the SSD module to the chassis using the two screws provided.

Removing an SSD Module

Before you begin

Ensure that the switch is powered off.

Procedure

Step 1 Loosen the two screws on the SSD module.

Step 2 Remove the SSD module from the module slot and insert the blank slot cover.

If you are replacing the SSD module, insert the new module into the slot. For more information, see Installing an SSD Module, on page 15.