Configuring IP Unicast Routing

This chapter describes how to configure IP unicast routing on the Catalyst 3750 switch. Unless otherwise noted, the term *switch* refers to a standalone switch and a switch stack. A switch stack operates and appears as a single router to the rest of the routers in the network. Basic routing functions, including static routing and the Routing Information Protocol (RIP), are available with both the standard multilayer software image (SMI) and the enhanced multilayer software image (EMI). To use advanced routing features and other routing protocols, you must have the enhanced multilayer software image installed on the standalone switch or on the stack master.

Note For more detailed IP unicast configuration information, refer to the *Cisco IOS IP and IP Routing Configuration Guide for Release 12.1*. For complete syntax and usage information for the commands used in this chapter, refer to the *Cisco IOS IP and IP Routing Command Reference for Release 12.1*.

This chapter consists of these sections:

Note When configuring routing parameters on the switch, to allocate system resources to maximize the number of unicast routes allowed, you can use the **sdm prefer routing** global configuration command to set the Switch Database Management (sdm) feature to the routing template. For more information on the SDM templates, see the "Using the SDM Templates" section on page 31-13 or refer to the **sdm prefer** command in the command reference for this release.

Understanding IP Routing

In some network environments, VLANs are associated with individual networks or subnetworks. In an IP network, each subnetwork is mapped to an individual VLAN. Configuring VLANs helps control the size of the broadcast domain and keeps local traffic local. However, network devices in different VLANs cannot communicate with one another without a Layer 3 device (router) to route traffic between the VLAN, referred to as inter-VLAN routing. You configure one or more routers to route traffic to the appropriate destination VLAN.

Figure 26-1 shows a basic routing topology. Switch A is in VLAN 10, and Switch B is in VLAN 20. The router has an interface in each VLAN.

Figure 26-1 Routing Topology Example

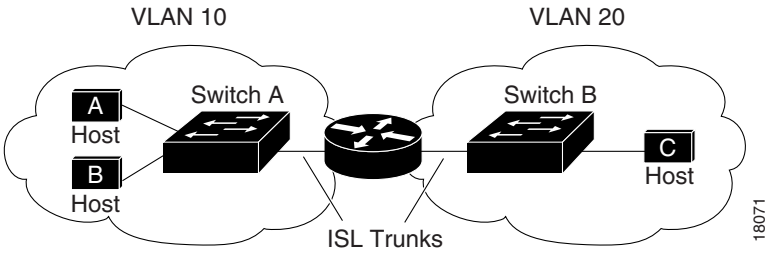

When Host A in VLAN 10 needs to communicate with Host B in VLAN 10, it sends a packet addressed to that host. Switch A forwards the packet directly to Host B, without sending it to the router.

When Host A sends a packet to Host C in VLAN 20, Switch A forwards the packet to the router, which receives the traffic on the VLAN 10 interface. The router checks the routing table, determines the correct outgoing interface, and forwards the packet on the VLAN 20 interface to Switch B. Switch B receives the packet and forwards it to Host C.

This section contains information on these routing topics:

- Types of Routing, page 26-2
- IP Routing and Switch Stacks, page 26-3

Types of Routing

Routers and Layer 3 switches can route packets in three different ways:

- By using default routing
- By using preprogrammed static routes for the traffic
- By dynamically calculating routes by using a routing protocol

Default routing refers to sending traffic with a destination unknown to the router to a default outlet or destination.

Static unicast routing forwards packets from predetermined ports through a single path into and out of a network. Static routing is secure and uses little bandwidth, but does not automatically respond to changes in the network, such as link failures, and therefore, might result in unreachable destinations. As networks grow, static routing becomes a labor-intensive liability.

Dynamic routing protocols are used by routers to dynamically calculate the best route for forwarding traffic. There are two types of dynamic routing protocols:

- Routers using distance-vector protocols maintain routing tables with distance values of networked resources, and periodically pass these tables to their neighbors. Distance-vector protocols use one or a series of metrics for calculating the best routes. These protocols are easy to configure and use.
- Routers using link-state protocols maintain a complex database of network topology, based on the exchange of link-state advertisements (LSAs) between routers. LSAs are triggered by an event in the network, which speeds up the convergence time or time required to respond to these changes. Link-state protocols respond quickly to topology changes, but require greater bandwidth and more resources than distance-vector protocols.

Distance-vector protocols supported by the Catalyst 3750 switch are Routing Information Protocol (RIP), which uses a single distance metric (cost) to determine the best path, and Interior Gateway Routing Protocol (IGRP), which uses a series of metrics. The switch also supports the Open Shortest Path First (OSPF) link-state protocol and Enhanced IGRP (EIGRP), which adds some link-state routing features to traditional IGRP to improve efficiency.

Note On a switch stack, the supported protocols are determined by the software running on the stack master. If the stack master is running the SMI, only default routing, static routing and RIP are supported. All other routing protocols require the EMI.

IP Routing and Switch Stacks

A Catalyst 3750 switch stack appears to the network as a single router, regardless of which switch in the stack is connected to a routing peer. For additional information about switch stack operation, see Chapter 5, “Managing Switch Stacks.”

The master switch performs these functions:

- It initializes and configures the routing protocols.
- It sends routing protocol messages and updates to other routers.
- It processes routing protocol messages and updates received from peer routers.
- It generates, maintains, and distributes the distributed Cisco Express Forwarding (dCEF) database to all stack members. The routes are programmed on all switches in the stack bases on this database.
- The MAC address of the stack master is used as the router MAC address for the whole stack, and all outside devices use this address to send IP packets to the stack.
- All IP packets that require software forwarding or processing go through the CPU of the master switch.

Stack members perform these functions:

- They act as routing standby switches, ready to take over in case they are elected as the stack master if the stack master fails.
- They program the routes into hardware. The routes programmed by the stack member are the same that are downloaded by the stack master as part of the dCEF database.

If a stack master fails, the stack detects that the master is down and elects one of the stack members to be the new stack master. During this period, except for a momentary interruption, the hardware continues to forward packets with no protocols active.

Upon election, the new stack master performs these functions:

- It starts generating, receiving, and processing routing updates.
- It builds routing tables, generates the CEF database, and distributes it to stack members.
- It begins using its MAC address as the router MAC address. To update its network peers of the new MAC address, it periodically (every few seconds for 5 minutes) sends a gratuitous ARP reply with the new router MAC address.

Note When a stack master is running the EMI, the stack is able to run all supported protocols, including Open Shortest Path First (OSPF), Interior Gateway Routing Protocol (IGRP), and Enhanced IGRP (EIGRP). If the master fails and the new elected master switch is running the SMI, these protocols will no longer run in the stack.

Caution Partitioning of the switch stack into two or more stacks might lead to undesirable behavior in the network.

Steps for Configuring Routing

By default, IP routing is disabled on the switch, and you must enable it before routing can take place. For detailed IP routing configuration information, refer to the *Cisco IOS IP and IP Routing Configuration Guide for Release 12.1*.

In the following procedures, the specified interface must be one of these Layer 3 interfaces:

- A routed port: a physical port configured as a Layer 3 port by using the **no switchport** interface configuration command.
- A switch virtual interface (SVI): a VLAN interface created by using the **interface vlan** *vlan_id* global configuration command and by default a Layer 3 interface.
- An EtherChannel port channel in Layer 3 mode: a port-channel logical interface created by using the **interface port-channel** *port-channel-number* global configuration command and binding the Ethernet interface into the channel group. For more information, see the "Configuring Layer 3 EtherChannels" section on page 25-13.

Note A Layer 3 switch can have an IP address assigned to each routed port and SVI. The number of routed ports and SVIs that you can configure is not limited by software. However, the interrelationship between this number and the number and volume of features being implemented might have an impact on CPU utilization because of hardware limitations. To optimize system memory for routing, use the **sdm prefer routing** global configuration command.

All Layer 3 interfaces on which routing will occur must have IP addresses assigned to them. See the "Assigning IP Addresses to Network Interfaces" section on page 26-6.

Configuring routing consists of several main procedures:

- To support VLAN interfaces, create and configure VLANs on the switch stack, and assign VLAN membership to Layer 2 interfaces. For more information, see Chapter 10, "Configuring VLANs."
- Configure Layer 3 interfaces.
- Enable IP routing on the switch.

- Assign IP addresses to the Layer 3 interfaces.
- Enable selected routing protocols on the switch.
- Configure routing protocol parameters (optional).

Configuring IP Addressing

A required task for configuring IP routing is to assign IP addresses to Layer 3 network interfaces to enable the interfaces and allow communication with the hosts on those interfaces that use IP. These sections describe how to configure various IP addressing features. Assigning IP addresses to the interface is required; the other procedures are optional.

Default Addressing Configuration

Table 26-1 shows the default addressing configuration.

Table 26-1 Default Addressing Configuration

Feature	Default Setting
IP address	None defined.
ARP	No permanent entries in the Address Resolution Protocol (ARP) cache. Encapsulation: Standard Ethernet-style ARP. Timeout: 14400 seconds (4 hours).
IP broadcast address	255.255.255.255 (all ones).
IP classless routing	Enabled.
IP default gateway	Disabled.
IP directed broadcast	Disabled (all IP directed broadcasts are dropped).
IP domain	Domain list: No domain names defined. Domain lookup: Enabled. Domain name: Enabled.
IP forward-protocol	If a helper address is defined or User Datagram Protocol (UDP) flooding is configured, UDP forwarding is enabled on default ports. Any-local-broadcast: Disabled. Spanning Tree Protocol (STP): Disabled. Turbo-flood: Disabled.

Table 26-1 Default Addressing Configuration (continued)

Feature	Default Setting
IP helper address	Disabled.
IP host	Disabled.
IRDP	Disabled. Defaults when enabled: • Broadcast IRDP advertisements. • Maximum interval between advertisements: 600 seconds. • Minimum interval between advertisements: 0.75 times max interval • Preference: 0.
IP proxy ARP	Enabled.
IP routing	Disabled.
IP subnet-zero	Disabled.

Assigning IP Addresses to Network Interfaces

An IP address identifies a location to which IP packets can be sent. Some IP addresses are reserved for special uses and cannot be used for host, subnet, or network addresses. RFC 1166, “Internet Numbers,” contains the official description of IP addresses.

An interface can have one primary IP address. A mask identifies the bits that denote the network number in an IP address. When you use the mask to subnet a network, the mask is referred to as a subnet mask. To receive an assigned network number, contact your Internet service provider.

Beginning in privileged EXEC mode, follow these steps to assign an IP address and a network mask to a Layer 3 interface:

	Command	Purpose
Step 1	**configure terminal**	Enter global configuration mode.
Step 2	**interface** *interface-id*	Enter interface configuration mode, and specify the Layer 3 interface to configure.
Step 3	**no switchport**	Remove the interface from Layer 2 configuration mode (if it is a physical interface).
Step 4	**ip address** *ip-address subnet-mask*	Configure the IP address and IP subnet mask.
Step 5	**no shutdown**	Enable the interface.
Step 6	**end**	Return to privileged EXEC mode.
Step 7	**show interfaces** [*interface-id*] **show ip interface** [*interface-id*] **show running-config interface** [*interface-id*]	Verify your entries.
Step 8	**copy running-config startup-config**	(Optional) Save your entries in the configuration file.

Use of Subnet Zero

Subnetting with a subnet address of zero is strongly discouraged because of the problems that can arise if a network and a subnet have the same addresses. For example, if network 131.108.0.0 is subnetted as 255.255.255.0, subnet zero would be written as 131.108.0.0, which is the same as the network address.

You can use the all ones subnet (131.108.255.0) and even though it is discouraged, you can enable the use of subnet zero if you need the entire subnet space for your IP address.

Beginning in privileged EXEC mode, follow these steps to enable subnet zero:

	Command	Purpose
Step 1	**configure terminal**	Enter global configuration mode.
Step 2	**ip subnet-zero**	Enable the use of subnet zero for interface addresses and routing updates.
Step 3	**end**	Return to privileged EXEC mode.
Step 4	**show running-config**	Verify your entry.
Step 5	**copy running-config startup-config**	(Optional) Save your entry in the configuration file.

Use the **no ip subnet-zero** global configuration command to restore the default and disable the use of subnet zero.

Classless Routing

By default, classless routing behavior is enabled on the switch when it is configured to route. With classless routing, if a router receives packets for a subnet of a network with no default route, the router forwards the packet to the best supernet route. A *supernet* consists of contiguous blocks of Class C address spaces used to simulate a single, larger address space and is designed to relieve the pressure on the rapidly depleting Class B address space.

In Figure 26-2, classless routing is enabled. When the host sends a packet to 120.20.4.1, instead of discarding the packet, the router forwards it to the best supernet route. If you disable classless routing and a router receives packets destined for a subnet of a network with no network default route, the router discards the packet.

Figure 26-2 IP Classless Routing

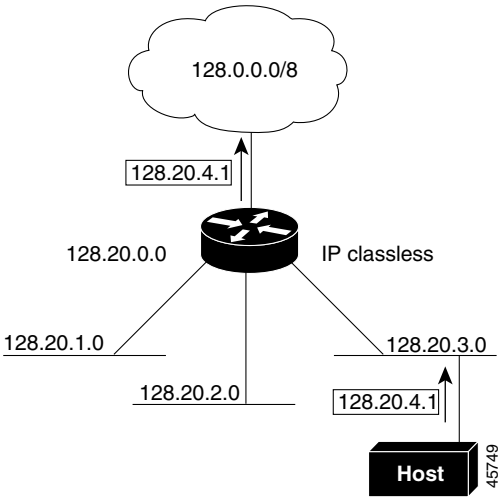

In Figure 26-3, the router in network 128.20.0.0 is connected to subnets 128.20.1.0, 128.20.2.0, and 128.20.3.0. If the host sends a packet to 120.20.4.1, because there is no network default route, the router discards the packet.

Figure 26-3 No IP Classless Routing

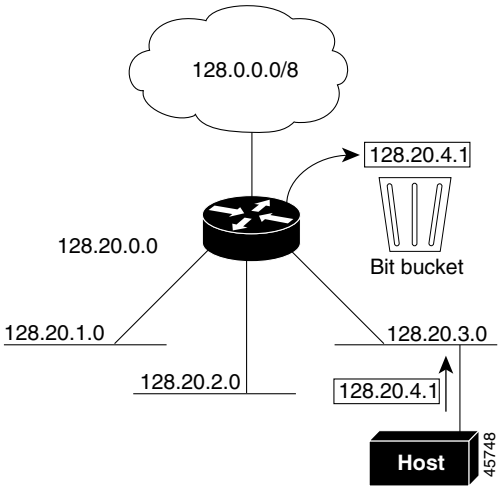

To prevent the switch from forwarding packets destined for unrecognized subnets to the best supernet route possible, you can disable classless routing behavior.

Beginning in privileged EXEC mode, follow these steps to disable classless routing:

	Command	Purpose
Step 1	**configure terminal**	Enter global configuration mode.
Step 2	**no ip classless**	Disable classless routing behavior.
Step 3	**end**	Return to privileged EXEC mode.
Step 4	**show running-config**	Verify your entry.
Step 5	**copy running-config startup-config**	(Optional) Save your entry in the configuration file.

To restore the default and have the switch forward packets destined for a subnet of a network with no network default route to the best supernet route possible, use the **ip classless** global configuration command.

Configuring Address Resolution Methods

You can control interface-specific handling of IP by using address resolution. A device using IP can have both a local address or MAC address, which uniquely defines the device on its local segment or LAN, and a network address, which identifies the network to which the device belongs.

Note In a Catalyst 3750 switch stack, network communication uses a single MAC address and the IP address of the stack.

The local address or MAC address is known as a data link address because it is contained in the data link layer (Layer 2) section of the packet header and is read by data link (Layer 2) devices. To communicate with a device on Ethernet, the software must determine the MAC address of the device. The process of determining the MAC address from an IP address is called *address resolution*. The process of determining the IP address from the MAC address is called *reverse address resolution*.

The switch can use these forms of address resolution:

- Address Resolution Protocol (ARP) is used to associate IP address with MAC addresses. Taking an IP address as input, ARP determines the associated MAC address and then stores the IP address/MAC address association in an ARP cache for rapid retrieval. Then the IP datagram is encapsulated in a link-layer frame and sent over the network. Encapsulation of IP datagrams and ARP requests or replies on IEEE 802 networks other than Ethernet is specified by the Subnetwork Access Protocol (SNAP).
- Proxy ARP helps hosts with no routing tables determine the MAC addresses of hosts on other networks or subnets. If the switch (router) receives an ARP request for a host that is not on the same interface as the ARP request sender, and if the router has all of its routes to the host through other interfaces, it generates a proxy ARP packet giving its own local data link address. The host that sent the ARP request then sends its packets to the router, which forwards them to the intended host.

Catalyst 3750 switches also use the Reverse Address Resolution Protocol (RARP), which functions the same as ARP does, except that the RARP packets request an IP address instead of a local MAC address. Using RARP requires a RARP server on the same network segment as the router interface. Use the **ip rarp-server** *address* interface configuration command to identify the server.

For more information on RARP, refer to the *Cisco IOS Configuration Fundamentals Configuration Guide for Release 12.1*.

You can perform these tasks to configure address resolution:

- Define a Static ARP Cache, page 26-9
- Set ARP Encapsulation, page 26-11
- Enable Proxy ARP, page 26-11

Define a Static ARP Cache

ARP and other address resolution protocols provide dynamic mapping between IP addresses and MAC addresses. Because most hosts support dynamic address resolution, you usually do not need to specify static ARP cache entries. If you must define a static ARP cache entry, you can do so globally, which installs a permanent entry in the ARP cache that the switch uses to translate IP addresses into MAC addresses. Optionally, you can also specify that the switch respond to ARP requests as if it were the owner of the specified IP address. If you do not want the ARP entry to be permanent, you can specify a timeout period for the ARP entry.

Beginning in privileged EXEC mode, follow these steps to provide static mapping between IP addresses and MAC addresses:

	Command	Purpose
Step 1	**configure terminal**	Enter global configuration mode.
Step 2	**arp** *ip-address hardware-address type*	Globally associate an IP address with a MAC (hardware) address in the ARP cache, and specify encapsulation type as one of these: • **arpa**—ARP encapsulation for Ethernet interfaces • **snap**—Subnetwork Address Protocol encapsulation for Token Ring and FDDI interfaces • **sap**—HP's ARP type
Step 3	**arp** *ip-address hardware-address type* [**alias**]	(Optional) Specify that the switch respond to ARP requests as if it were the owner of the specified IP address.
Step 4	**interface** *interface-id*	Enter interface configuration mode, and specify the interface to configure.
Step 5	**arp timeout** *seconds*	(Optional) Set the length of time an ARP cache entry will stay in the cache. The default is 14400 seconds (4 hours). The range is 0 to 2147483 seconds.
Step 6	**end**	Return to privileged EXEC mode.
Step 7	**show interfaces** [*interface-id*]	Verify the type of ARP and the timeout value used on all interfaces or a specific interface.
Step 8	**show arp** or **show ip arp**	View the contents of the ARP cache.
Step 9	**copy running-config startup-config**	(Optional) Save your entries in the configuration file.

To remove an entry from the ARP cache, use the **no arp** *ip-address hardware-address type* global configuration command. To remove all nonstatic entries from the ARP cache, use the **clear arp-cache** privileged EXEC command.

Set ARP Encapsulation

By default, Ethernet ARP encapsulation (represented by the **arpa** keyword) is enabled on an IP interface. You can change the encapsulation methods to SNAP if required by your network.

Beginning in privileged EXEC mode, follow these steps to specify the ARP encapsulation type:

	Command	Purpose
Step 1	**configure terminal**	Enter global configuration mode.
Step 2	**interface** *interface-id*	Enter interface configuration mode, and specify the Layer 3 interface to configure.
Step 3	**arp** {**arpa** | **snap**}	Specify the ARP encapsulation method: • **arpa**—Address Resolution Protocol • **snap**—Subnetwork Address Protocol
Step 4	**end**	Return to privileged EXEC mode.
Step 5	**show interfaces** [*interface-id*]	Verify ARP encapsulation configuration on all interfaces or the specified interface.
Step 6	**copy running-config startup-config**	(Optional) Save your entries in the configuration file.

To disable an encapsulation type, use the **no arp arpa** or **no arp snap** interface configuration command.

Enable Proxy ARP

By default, the switch uses proxy ARP to help hosts determine MAC addresses of hosts on other networks or subnets.

Beginning in privileged EXEC mode, follow these steps to enable proxy ARP if it has been disabled:

	Command	Purpose
Step 1	**configure terminal**	Enter global configuration mode.
Step 2	**interface** *interface-id*	Enter interface configuration mode, and specify the Layer 3 interface to configure.
Step 3	**ip proxy-arp**	Enable proxy ARP on the interface.
Step 4	**end**	Return to privileged EXEC mode.
Step 5	**show ip interface** [*interface-id*]	Verify the configuration on the interface or all interfaces.
Step 6	**copy running-config startup-config**	(Optional) Save your entries in the configuration file.

To disable proxy ARP on the interface, use the **no ip proxy-arp** interface configuration command.

Routing Assistance When IP Routing is Disabled

These mechanisms allow the switch to learn about routes to other networks when it does not have IP routing enabled:

- Proxy ARP, page 26-12
- Default Gateway, page 26-12
- ICMP Router Discovery Protocol (IRDP), page 26-13

Proxy ARP

Proxy ARP, the most common method for learning about other routes, enables an Ethernet host with no routing information to communicate with hosts on other networks or subnets. The host assumes that all hosts are on the same local Ethernet and that they can use ARP to determine their MAC addresses. If a switch receives an ARP request for a host that is not on the same network as the sender, the switch evaluates whether it has the best route to that host. If it does, it sends an ARP reply packet with its own Ethernet MAC address, and the host that sent the request sends the packet to the switch, which forwards it to the intended host. Proxy ARP treats all networks as if they are local and performs ARP requests for every IP address.

Proxy ARP is enabled by default. To enable it after it has been disabled, see the "Enable Proxy ARP" section on page 26-11. Proxy ARP works as long as other routers support it.

Default Gateway

Another method for locating routes is to define a default router or default gateway. All nonlocal packets are sent to this router, which either routes them appropriately or sends an IP Control Message Protocol (ICMP) redirect message back, defining which local router the host should use. The switch caches the redirect messages and forwards each packet as efficiently as possible. A limitation of this method is that there is no means of detecting when the default router has gone down or is unavailable.

Beginning in privileged EXEC mode, follow these steps to define a default gateway (router) when IP routing is disabled:

	Command	Purpose
Step 1	**configure terminal**	Enter global configuration mode.
Step 2	**ip default-gateway** *ip-address*	Set up a default gateway (router).
Step 3	**end**	Return to privileged EXEC mode.
Step 4	**show ip redirects**	Display the address of the default gateway router to verify the setting.
Step 5	**copy running-config startup-config**	(Optional) Save your entries in the configuration file.

Use the **no ip default-gateway** global configuration command to disable this function.

ICMP Router Discovery Protocol (IRDP)

Router discovery allows the switch to dynamically learn about routes to other networks using IRDP. IRDP allows hosts to locate routers. When operating as a client, the switch generates router discovery packets. When operating as a host, the switch receives router discovery packets. The switch can also listen to Routing Information Protocol (RIP) and Interior Gateway Routing Protocol (IGRP) routing updates and use this information to infer locations of routers. The switch does not actually store the routing tables sent by routing devices; it merely keeps track of which systems are sending the data. The advantage of using IRDP is that it allows each router to specify both a priority and the time after which a device is assumed to be down if no further packets are received.

Each device discovered becomes a candidate for the default router, and a new highest-priority router is selected when a higher priority router is discovered, when the current default router is declared down, or when a TCP connection is about to time out because of excessive retransmissions.

The only required task for IRDP routing on an interface is to enable IRDP processing on that interface. When enabled, the default parameters apply. You can optionally change any of these parameters.

Beginning in privileged EXEC mode, follow these steps to enable and configure IRDP on an interface:

	Command	Purpose
Step 1	**configure terminal**	Enter global configuration mode.
Step 2	**interface** *interface-id*	Enter interface configuration mode, and specify the Layer 3 interface to configure.
Step 3	**ip irdp**	Enable IRDP processing on the interface.
Step 4	**ip irdp multicast**	(Optional) Send IRDP advertisements to the multicast address (224.0.0.1) instead of IP broadcasts. **Note** This command allows for compatibility with Sun Microsystems Solaris, which requires IRDP packets to be sent out as multicasts. Many implementations cannot receive these multicasts; ensure end-host ability before using this command.
Step 5	**ip irdp holdtime** *seconds*	(Optional) Set the IRDP period for which advertisements are valid. The default is three times the **maxadvertinterval** value. It must be greater than **maxadvertinterval** and cannot be greater than 9000 seconds. If you change the **maxadvertinterval** value, this value also changes.
Step 6	**ip irdp maxadvertinterval** *seconds*	(Optional) Set the IRDP maximum interval between advertisements. The default is 600 seconds.
Step 7	**ip irdp minadvertinterval** *seconds*	(Optional) Set the IRDP minimum interval between advertisements. The default is 0.75 times the **maxadvertinterval**. If you change the **maxadvertinterval**, this value changes to the new default (0.75 of **maxadvertinterval**).
Step 8	**ip irdp preference** *number*	(Optional) Set a device IRDP preference level. The allowed range is -2^{31} to 2^{31}. The default is 0. A higher value increases the router preference level.
Step 9	**ip irdp address** *address* [*number*]	(Optional) Specify an IRDP address and preference to proxy-advertise.
Step 10	**end**	Return to privileged EXEC mode.
Step 11	**show ip irdp**	Verify settings by displaying IRDP values.
Step 12	**copy running-config startup-config**	(Optional) Save your entries in the configuration file.

If you change the **maxadvertinterval** value, the **holdtime** and **minadvertinterval** values also change, so it is important to first change the **maxadvertinterval** value, before manually changing either the **holdtime** or **minadvertinterval** values.

Use the **no ip irdp** interface configuration command to disable IRDP routing.

Configuring Broadcast Packet Handling

After configuring an IP interface address, you can enable routing and configure one or more routing protocols, or you can configure the way the switch responds to network broadcasts. A broadcast is a data packet destined for all hosts on a physical network. The switch supports two kinds of broadcasting:

- A directed broadcast packet is sent to a specific network or series of networks. A directed broadcast address includes the network or subnet fields.
- A flooded broadcast packet is sent to every network.

Note You can also limit broadcast, unicast, and multicast traffic on Layer 2 interfaces by using the **storm-control** interface configuration command to set traffic suppression levels. For more information, see Chapter 16, "Configuring Port-Based Traffic Control."

Routers provide some protection from broadcast storms by limiting their extent to the local cable. Bridges (including intelligent bridges), because they are Layer 2 devices, forward broadcasts to all network segments, thus propagating broadcast storms. The best solution to the broadcast storm problem is to use a single broadcast address scheme on a network. In most modern IP implementations, you can set the address to be used as the broadcast address. Many implementations, including the one in the Catalyst 3750 switch, support several addressing schemes for forwarding broadcast messages.

Perform the tasks in these sections to enable these schemes:

- Enabling Directed Broadcast-to-Physical Broadcast Translation, page 26-14
- Forwarding UDP Broadcast Packets and Protocols, page 26-15
- Establishing an IP Broadcast Address, page 26-16
- Flooding IP Broadcasts, page 26-17

Enabling Directed Broadcast-to-Physical Broadcast Translation

By default, IP directed broadcasts are dropped; they are not forwarded. Dropping IP-directed broadcasts makes routers less susceptible to denial-of-service attacks.

You can enable forwarding of IP-directed broadcasts on an interface where the broadcast becomes a physical (MAC-layer) broadcast. Only those protocols configured by using the **ip forward-protocol** global configuration command are forwarded.

You can specify an access list to control which broadcasts are forwarded. When an access list is specified, only those IP packets permitted by the access list are eligible to be translated from directed broadcasts to physical broadcasts. For more information on access lists, see Chapter 23, "Configuring Network Security with ACLs."

Beginning in privileged EXEC mode, follow these steps to enable forwarding of IP-directed broadcasts on an interface:

	Command	Purpose
Step 1	**configure terminal**	Enter global configuration mode.
Step 2	**interface** *interface-id*	Enter interface configuration mode, and specify the interface to configure.
Step 3	**ip directed-broadcast** [*access-list-number*]	Enable directed broadcast-to-physical broadcast translation on the interface. You can include an access list to control which broadcasts are forwarded. When an access list is specified, only IP packets permitted by the access list are eligible to be translated.
Step 4	**exit**	Return to global configuration mode.
Step 5	**ip forward-protocol** {**udp** [*port*] | **nd** | **sdns**}	Specify which protocols and ports the router forwards when forwarding broadcast packets. • **udp**—Forward UPD datagrams. *port*: (Optional) Destination port that controls which UDP services are forwarded. • **nd**—Forward ND datagrams. • **sdns**—Forward SDNS datagrams
Step 6	**end**	Return to privileged EXEC mode.
Step 7	**show ip interface** [*interface-id*] or **show running-config**	Verify the configuration on the interface or all interfaces.
Step 8	**copy running-config startup-config**	(Optional) Save your entries in the configuration file.

Use the **no ip directed-broadcast** interface configuration command to disable translation of directed broadcast to physical broadcasts. Use the **no ip forward-protocol** global configuration command to remove a protocol or port.

Forwarding UDP Broadcast Packets and Protocols

User Datagram Protocol (UDP) is an IP host-to-host layer protocol, as is TCP. UDP provides a low-overhead, connectionless session between two end systems and does not provide for acknowledgment of received datagrams. Network hosts occasionally use UDP broadcasts to determine address, configuration, and name information. If such a host is on a network segment that does not include a server, UDP broadcasts are normally not forwarded. You can remedy this situation by configuring an interface on a router to forward certain classes of broadcasts to a helper address. You can use more than one helper address per interface.

You can specify a UDP destination port to control which UDP services are forwarded. You can specify multiple UDP protocols. You can also specify the Network Disk (ND) protocol, which is used by older diskless Sun workstations and the network security protocol SDNS.

By default, both UDP and ND forwarding are enabled if a helper address has been defined for an interface. The description for the **ip forward-protocol** interface configuration command in the *Cisco IOS IP and IP Routing Command Reference for Release 12.1* lists the ports that are forwarded by default if you do not specify any UDP ports.

If you do not specify any UDP ports when you configure the forwarding of UDP broadcasts, you are configuring the router to act as a BOOTP forwarding agent. BOOTP packets carry Dynamic Host Configuration Protocol (DHCP) information.

Beginning in privileged EXEC mode, follow these steps to enable forwarding UDP broadcast packets on an interface and specify the destination address:

	Command	Purpose
Step 1	**configure terminal**	Enter global configuration mode.
Step 2	**interface** *interface-id*	Enter interface configuration mode, and specify the Layer 3 interface to configure.
Step 3	**ip helper-address** *address*	Enable forwarding and specify the destination address for forwarding UDP broadcast packets, including BOOTP.
Step 4	**exit**	Return to global configuration mode.
Step 5	**ip forward-protocol** {**udp** [*port*] | **nd** | **sdns**}	Specify which protocols the router forwards when forwarding broadcast packets.
Step 6	**end**	Return to privileged EXEC mode.
Step 7	**show ip interface** [*interface-id*] or **show running-config**	Verify the configuration on the interface or all interfaces.
Step 8	**copy running-config startup-config**	(Optional) Save your entries in the configuration file.

Use the **no ip helper-address** interface configuration command to disable the forwarding of broadcast packets to specific addresses. Use the **no ip forward-protocol** global configuration command to remove a protocol or port.

Establishing an IP Broadcast Address

The most popular IP broadcast address (and the default) is an address consisting of all ones (255.255.255.255). However, the switch can be configured to generate any form of IP broadcast address.

Beginning in privileged EXEC mode, follow these steps to set the IP broadcast address on an interface:

	Command	Purpose
Step 1	**configure terminal**	Enter global configuration mode.
Step 2	**interface** *interface-id*	Enter interface configuration mode, and specify the interface to configure.
Step 3	**ip broadcast-address** *ip-address*	Enter a broadcast address different from the default, for example 128.1.255.255.
Step 4	**end**	Return to privileged EXEC mode.
Step 5	**show ip interface** [*interface-id*]	Verify the broadcast address on the interface or all interfaces.
Step 6	**copy running-config startup-config**	(Optional) Save your entries in the configuration file.

To restore the default IP broadcast address, use the **no ip broadcast-address** interface configuration command.

Flooding IP Broadcasts

You can allow IP broadcasts to be flooded throughout your internetwork in a controlled fashion by using the database created by the bridging STP. Using this feature also prevents loops. To support this capability, bridging must be configured on each interface that is to participate in the flooding. If bridging is not configured on an interface, it still can receive broadcasts. However, the interface never forwards broadcasts it receives, and the router never uses that interface to send broadcasts received on a different interface.

Packets that are forwarded to a single network address using the IP helper-address mechanism can be flooded. Only one copy of the packet is sent on each network segment.

To be considered for flooding, packets must meet these criteria. (Note that these are the same conditions used to consider packet forwarding using IP helper addresses.)

- The packet must be a MAC-level broadcast.
- The packet must be an IP-level broadcast.
- The packet must be a TFTP, DNS, Time, NetBIOS, ND, or BOOTP packet, or a UDP specified by the **ip forward-protocol udp** global configuration command.
- The time-to-live (TTL) value of the packet must be at least two.

A flooded UDP datagram is given the destination address specified with the **ip broadcast-address** interface configuration command on the output interface. The destination address can be set to any address. Thus, the destination address might change as the datagram propagates through the network. The source address is never changed. The TTL value is decremented.

When a flooded UDP datagram is sent out an interface (and the destination address possibly changed), the datagram is handed to the normal IP output routines and is, therefore, subject to access lists, if they are present on the output interface.

Beginning in privileged EXEC mode, follow these steps to use the bridging spanning-tree database to flood UDP datagrams:

	Command	Purpose
Step 1	**configure terminal**	Enter global configuration mode.
Step 2	**ip forward-protocol spanning-tree**	Use the bridging spanning-tree database to flood UDP datagrams.
Step 3	**end**	Return to privileged EXEC mode.
Step 4	**show running-config**	Verify your entry.
Step 5	**copy running-config startup-config**	(Optional) Save your entry in the configuration file.

Use the **no ip forward-protocol spanning-tree** global configuration command to disable the flooding of IP broadcasts.

In the Catalyst 3750 switch, the majority of packets are forwarded in hardware; most packets do not go through the switch CPU. For those packets that do go to the CPU, you can speed up spanning tree-based UDP flooding by a factor of about four to five times by using turbo-flooding. This feature is supported over Ethernet interfaces configured for ARP encapsulation.

Beginning in privileged EXEC mode, follow these steps to increase spanning-tree-based flooding:

	Command	Purpose
Step 1	**configure terminal**	Enter global configuration mode
Step 2	**ip forward-protocol turbo-flood**	Use the spanning-tree database to speed up flooding of UDP datagrams.
Step 3	**end**	Return to privileged EXEC mode.
Step 4	**show running-config**	Verify your entry.
Step 5	**copy running-config startup-config**	(Optional) Save your entry in the configuration file.

To disable this feature, use the **no ip forward-protocol turbo-flood** global configuration command.

Monitoring and Maintaining IP Addressing

When the contents of a particular cache, table, or database have become or are suspected to be invalid, you can remove all its contents by using the **clear** privileged EXEC commands. Table 26-2 lists the commands for clearing contents.

Table 26-2 Commands to Clear Caches, Tables, and Databases

Command	Purpose
clear arp-cache	Clear the IP ARP cache and the fast-switching cache.
clear host {*name* | *}}	Remove one or all entries from the host name and the address cache.
clear ip route {*network* [*mask*] |*}	Remove one or more routes from the IP routing table.

You can display specific statistics, such as the contents of IP routing tables, caches, and databases; the reachability of nodes; and the routing path that packets are taking through the network. Table 26-3 lists the privileged EXEC commands for displaying IP statistics.

Table 26-3 Commands to Display Caches, Tables, and Databases

Command	Purpose
show arp	Display the entries in the ARP table.
show hosts	Display the default domain name, style of lookup service, name server hosts, and the cached list of host names and addresses.
show ip aliases	Display IP addresses mapped to TCP ports (aliases).
show ip arp	Display the IP ARP cache.
show ip interface [*interface-id*]	Display the IP status of interfaces.
show ip irdp	Display IRDP values.
show ip masks *address*	Display the masks used for network addresses and the number of subnets using each mask.
show ip redirects	Display the address of a default gateway.
show ip route [*address* [*mask*]] | [*protocol*]	Display the current state of the routing table.
show ip route summary	Display the current state of the routing table in summary form.

Enabling IP Unicast Routing

By default, the switch is in Layer 2 switching mode and IP routing is disabled. To use the Layer 3 capabilities of the switch, you must enable IP routing.

Beginning in privileged EXEC mode, follow these steps to enable IP routing:

	Command	Purpose
Step 1	**configure terminal**	Enter global configuration mode.
Step 2	**ip routing**	Enable IP routing.
Step 3	**router** *ip_routing_protocol*	Specify an IP routing protocol. This step might include other commands, such as specifying the networks to route with the **network** (RIP) router configuration command. For information on specific protocols, refer to sections later in this chapter and to the *Cisco IOS IP and IP Routing Configuration Guide for Release 12.1*. **Note** The SMI supports only RIP as a routing protocol
Step 4	**end**	Return to privileged EXEC mode.
Step 5	**show running-config**	Verify your entries.
Step 6	**copy running-config startup-config**	(Optional) Save your entries in the configuration file.

Use the **no ip routing** global configuration command to disable routing.

This example shows how to enable IP routing using RIP as the routing protocol:

```
Switch# configure terminal
Enter configuration commands, one per line.  End with CNTL/Z.
Switch(config)# ip routing
Switch(config)# router rip
Switch(config-router)# network 10.0.0.0
Switch(config-router)# end
```

You can now set up parameters for the selected routing protocols as described in these sections:

- Configuring RIP, page 26-20
- Configuring IGRP, page 26-25
- Configuring OSPF, page 26-30
- Configuring EIGRP, page 26-39

You can also configure nonprotocol-specific features:

- Configuring Protocol-Independent Features, page 26-45

Configuring RIP

The Routing Information Protocol (RIP) is an interior gateway protocol (IGP) created for use in small, homogeneous networks. It is a distance-vector routing protocol that uses broadcast User Datagram Protocol (UDP) data packets to exchange routing information. The protocol is documented in RFC 1058. You can find detailed information about RIP in *IP Routing Fundamentals,* published by Cisco Press.

Note RIP is the only routing protocol supported by the SMI; other routing protocols require the master switch to be running the EMI.

Using RIP, the switch sends routing information updates (advertisements) every 30 seconds. If a router does not receive an update from another router for 180 seconds or more, it marks the routes served by that router as unusable. If there is still no update after 240 seconds, the router removes all routing table entries for the non-updating router.

RIP uses hop counts to rate the value of different routes. The hop count is the number of routers that can be traversed in a route. A directly connected network has a hop count of zero; a network with a hop count of 16 is unreachable. This small range (0 to 15) makes RIP unsuitable for large networks.

If the router has a default network path, RIP advertises a route that links the router to the pseudonetwork 0.0.0.0. The 0.0.0.0 network does not exist; it is treated by RIP as a network to implement the default routing feature. The switch advertises the default network if a default was learned by RIP or if the router has a gateway of last resort and RIP is configured with a default metric. RIP sends updates to the interfaces in specified networks. If an interface's network is not specified, it is not advertised in any RIP update.

This section briefly describes how to configure RIP. It includes this information:

- Default RIP Configuration, page 26-20
- Configuring Basic RIP Parameters, page 26-21
- Configuring RIP Authentication, page 26-23
- Configuring Summary Addresses and Split Horizon, page 26-23

Default RIP Configuration

Table 26-4 shows the default RIP configuration.

Table 26-4 Default RIP Configuration

Feature	Default Setting
Auto summary	Enabled.
Default-information originate	Disabled.
Default metric	Built-in; automatic metric translations.
IP RIP authentication key-chain	No authentication. Authentication mode: clear text.
IP RIP receive version	According to the **version** router configuration command.
IP RIP send version	According to the **version** router configuration command.
IP RIP triggered	According to the **version** router configuration command.

Table 26-4 Default RIP Configuration (continued)

Feature	Default Setting
IP split horizon	Varies with media.
Neighbor	None defined.
Network	None specified.
Offset list	Disabled.
Output delay	0 milliseconds.
Timers basic	• Update: 30 seconds. • Invalid: 180 seconds. • Hold-down: 180 seconds. • Flush: 240 seconds.
Validate-update-source	Enabled.
Version	Receives RIP version 1 and 2 packets; sends version 1 packets.

Configuring Basic RIP Parameters

To configure RIP, you enable RIP routing for a network and optionally configure other parameters.

Beginning in privileged EXEC mode, follow these steps to enable and configure RIP:

	Command	Purpose
Step 1	**configure terminal**	Enter global configuration mode.
Step 2	**ip routing**	Enable IP routing. (Required only if IP routing is disabled.)
Step 3	**router rip**	Enable a RIP routing process, and enter router configuration mode.
Step 4	**network** *network number*	Associate a network with a RIP routing process. You can specify multiple **network** commands. RIP routing updates are sent and received through interfaces only on these networks.
Step 5	**neighbor** *ip-address*	(Optional) Define a neighboring router with which to exchange routing information. This step allows routing updates from RIP (normally a broadcast protocol) to reach nonbroadcast networks.
Step 6	**offset list** [*access-list number* | *name*] {**in** | **out**} *offset* [*type number*]	(Optional) Apply an offset list to routing metrics to increase incoming and outgoing metrics to routes learned through RIP. You can limit the offset list with an access list or an interface.

	Command	Purpose
Step 7	**timers basic** *update invalid holddown flush*	(Optional) Adjust routing protocol timers. Valid ranges for all timers are 0 to 4294967295 seconds. • *update*—The time between sending routing updates. The default is 30 seconds. • *invalid*—The timer after which a route is declared invalid. The default is 180 seconds. • *holddown*—The time before a route is removed from the routing table. The default is 180 seconds. • *flush*—The amount of time for which routing updates are postponed. The default is 240 seconds.
Step 8	**version** {**1** | **2**}	(Optional) Configure the switch to receive and send only RIP Version 1 or RIP version 2 packets. By default, the switch receives Version 1 and 2 but sends only Version 1. You can also use the interface commands **ip rip** {**send** | **receive**} **version 1** | **2** | **1 2**} to control what versions are used for sending and receiving on interfaces.
Step 9	**no auto summary**	(Optional) Disable automatic summarization. By default, the switch summarizes subprefixes when crossing classful network boundaries. Disable summarization (RIP version 2 only) to advertise subnet and host routing information to classful network boundaries.
Step 10	**no validate-update-source**	(Optional) Disable validation of the source IP address of incoming RIP routing updates. By default, the switch validates the source IP address of incoming RIP routing updates and discards the update if the source address is not valid. Under normal circumstances, disabling this feature is not recommended. However, if you have a router that is off-network and you want to receive its updates, you can use this command.
Step 11	**output-delay** *delay*	(Optional) Add interpacket delay for RIP updates sent. By default, packets in a multiple-packet RIP update have no delay added between packets. If you are sending packets to a lower-speed device, you can add an interpacket delay in the range of 8 to 50 milliseconds.
Step 12	**end**	Return to privileged EXEC mode.
Step 13	**show ip protocols**	Verify your entries.
Step 14	**copy running-config startup-config**	(Optional) Save your entries in the configuration file.

To turn off the RIP routing process, use the **no router rip** global configuration command.

To display the parameters and current state of the active routing protocol process, use the **show ip protocols** privileged EXEC command. Use the **show ip rip database** privileged EXEC command to display summary address entries in the RIP database.

Configuring RIP Authentication

RIP version 1 does not support authentication. If you are sending and receiving RIP Version 2 packets, you can enable RIP authentication on an interface. The key chain determines the set of keys that can be used on the interface. If a key chain is not configured, no authentication is performed, not even the default. Therefore, you must also perform the tasks in the "Managing Authentication Keys" section on page 26-54.

The switch supports two modes of authentication on interfaces for which RIP authentication is enabled: plain text and MD5. The default is plain text.

Beginning in privileged EXEC mode, follow these steps to configure RIP authentication on an interface:

	Command	Purpose
Step 1	**configure terminal**	Enter global configuration mode.
Step 2	**interface** *interface-id*	Enter interface configuration mode, and specify the interface to configure.
Step 3	**ip rip authentication key-chain** *name-of-chain*	Enable RIP authentication.
Step 4	**ip rip authentication mode** [**text** | **md5**]	Configure the interface to use plain text authentication (the default) or MD5 digest authentication.
Step 5	**end**	Return to privileged EXEC mode.
Step 6	**show running-config interface** [*interface-id*]	Verify your entries.
Step 7	**copy running-config startup-config**	(Optional) Save your entries in the configuration file.

To restore clear text authentication, use the **no ip rip authentication mode** interface configuration command. To prevent authentication, use the **no ip rip authentication key-chain** interface configuration command.

Configuring Summary Addresses and Split Horizon

Routers connected to broadcast-type IP networks and using distance-vector routing protocols normally use the split-horizon mechanism to reduce the possibility of routing loops. Split horizon blocks information about routes from being advertised by a router on any interface from which that information originated. This feature usually optimizes communication among multiple routers, especially when links are broken.

Note In general, disabling split horizon is not recommended unless you are certain that your application requires it to properly advertise routes.

If you want to configure an interface running RIP to advertise a summarized local IP address pool on a network access server for dial-up clients, use the **ip summary-address rip** interface configuration command.

Note If split horizon is enabled, neither autosummary nor interface IP summary addresses are advertised.

Beginning in privileged EXEC mode, follow these steps to set an interface to advertise a summarized local IP address and to disable split horizon on the interface:

	Command	Purpose
Step 1	**configure terminal**	Enter global configuration mode.
Step 2	**interface** *interface-id*	Enter interface configuration mode, and specify the Layer 3 interface to configure.
Step 3	**ip address** *ip-address subnet-mask*	Configure the IP address and IP subnet.
Step 4	**ip summary-address rip** *ip address ip-network mask*	Configure the IP address to be summarized and the IP network mask.
Step 5	**no ip split horizon**	Disable split horizon on the interface.
Step 6	**end**	Return to privileged EXEC mode.
Step 7	**show ip interface** *interface-id*	Verify your entries.
Step 8	**copy running-config startup-config**	(Optional) Save your entries in the configuration file.

To disable IP summarization, use the **no ip summary-address rip** router configuration command.

In this example, the major net is 10.0.0.0. The summary address 10.2.0.0 overrides the autosummary address of 10.0.0.0 so that 10.2.0.0 is advertised out interface Gigabit Ethernet 2 on switch 1, and 10.0.0.0 is not advertised. In the example, if the interface is still in Layer 2 mode (the default), you must enter a **no switchport** interface configuration command before entering the **ip address** interface configuration command.

Note If split horizon is enabled, neither autosummary nor interface summary addresses (those configured with the **ip summary-address rip** router configuration command) are advertised.

```
Switch(config)# router rip
Switch(config-router)# interface gi1/0/2
Switch(config-if)# ip address 10.1.5.1 255.255.255.0
Switch(config-if)# ip summary-address rip 10.2.0.0 255.255.0.0
Switch(config-if)# no ip split-horizon
Switch(config-if)# exit
Switch(config)# router rip
Switch(config-router)# network 10.0.0.0
Switch(config-router)# neighbor 2.2.2.2 peer-group mygroup
Switch(config-router)# end
```

Configuring IGRP

Interior Gateway Routing Protocol (IGRP) is a dynamic, distance-vector routing, proprietary Cisco protocol for routing in an autonomous system (AS) that contains large, arbitrarily complex networks with diverse bandwidth and delay characteristics. IGRP uses a combination of user-configurable metrics, including internetwork delay, bandwidth, reliability, and load. IGRP also advertises types of routes: interior, system, and exterior, as shown in Figure 26-4.

- *Interior routes* are routes between subnets in the network attached to a router interface. If the network attached to a router is not subnetted, IGRP does not advertise interior routes.
- *System routes* are routes to networks within an autonomous system. The router derives system routes from directly connected network interfaces and system route information provided by other IGRP-speaking routers or access servers. System routes do not include subnet information.
- *Exterior routes* are routes to networks outside the AS that are considered when identifying a gateway of last resort. The router chooses a gateway of last resort from the list of exterior routes that IGRP provides if it does not have a better route for a packet and the destination is not a connected network. If the AS has more than one connection to an external network, different routers can choose different exterior routers as the gateway of last resort.

Figure 26-4 Interior, System, and Exterior Routes

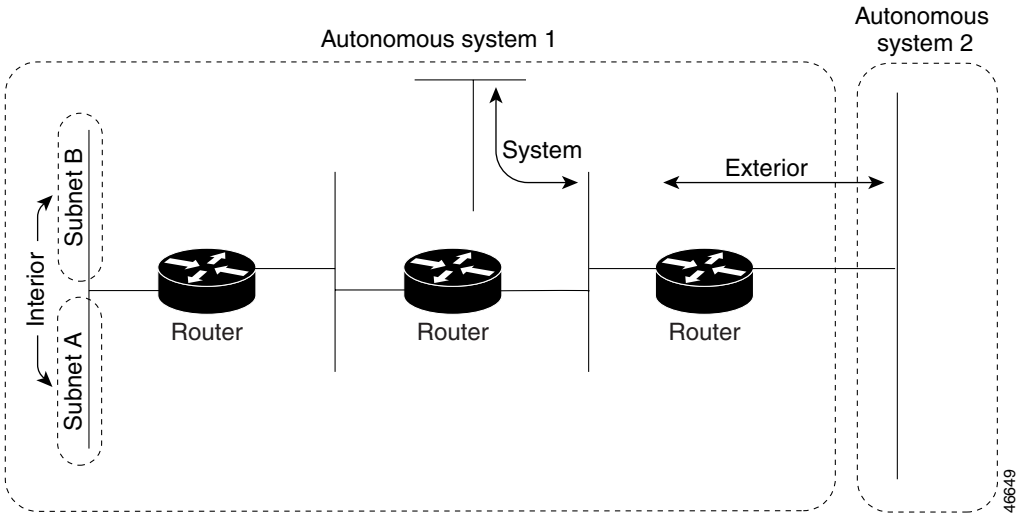

By default, a router running IGRP sends an update broadcast every 90 seconds and declares a route inaccessible if it does not receive an update from the first router in the route within three update periods (270 seconds). After seven update periods (630 seconds), the route is removed from the routing table.

This section briefly describes how to configure IGRP. It includes this information:

- Default IGRP Configuration, page 26-26
- Understanding Load Balancing and Traffic Distribution Control, page 26-26
- Configuring Basic IGRP Parameters, page 26-27
- Configuring Split Horizon, page 26-29

Note To enable IGRP, the stack master must be running the EMI.

Default IGRP Configuration

Table 26-5 shows the default IGRP configuration.

Table 26-5 Default IGRP Configuration

Feature	Default Setting
IP split horizon	Varies with media.
Metric holddown	Disabled.
Metric maximum-hops	100 hops.
Neighbor	None defined.
Network	None specified.
Offset-list	Disabled.
Set metric	None set in route map.
Timers basic	Update: 90 seconds. Invalid: 270 seconds. Hold-down: 280 seconds. Flush: 630 seconds. Sleeptime: 0 milliseconds.
Traffic-share	Distributed proportionately to the ratios of the metrics.

Routers running IGRP use flash and poison-reverse updates to speed up the convergence of the routing algorithm. Flash updates are updates sent before the standard interval, notifying other routers of a metric change. Poison-reverse updates are intended to defeat larger routing loops caused by increases in routing metrics. The poison-reverse updates are sent to remove a route and place it in hold-down, which keeps new routing information from being used for a certain period of time.

Understanding Load Balancing and Traffic Distribution Control

IGRP can simultaneously use an asymmetric set of paths for a given destination. This unequal-cost load balancing allows traffic to be distributed among up to four unequal-cost paths to provide greater overall throughput and reliability.

Alternate path variance (that is, the difference in desirability between the primary and alternate paths) determines the feasibility of a potential route. An alternate route is feasible if the next router in the path is closer to the destination (has a lower metric value) than the router being used, and if the metric for the entire alternate path is within the variance. Only feasible paths are used for load balancing and are included in the routing table. These conditions limit the number of load balancing occurrences, but ensure that the dynamics of the network remain stable.

These general rules apply to IGRP unequal-cost load balancing:

- IGRP accepts up to four paths for a given destination network.
- The local best metric must be greater than the metric learned from the next router; that is, the next hop router must be closer (have a smaller metric value) to the destination than the local best metric.

- The alternative path metric must be within the specified variance of the local best metric. The multiplier times the local best metric for the destination must be greater than or equal to the metric through the next router.

If these conditions are met, the route is determined to be feasible and can be added to the routing table.

By default, the amount of variance is set to one (equal-cost load balancing). Use the **variance** router configuration command to define how much worse an alternate path can be before that path is disallowed.

If variance is configured as described in the preceding section, IGRP or Enhanced IGRP distributes traffic among multiple routes of unequal cost to the same destination. If you want faster convergence to alternate routes, but you do not want to send traffic across inferior routes in the normal case, you might prefer to have no traffic flow along routes with higher metrics. Use the **traffic-share** router configuration command to control distribution of traffic among multiple routes of unequal cost.

Note For more information and examples, refer to the *Cisco IOS IP and IP Routing Configuration Guide for Release 12.1*.

Configuring Basic IGRP Parameters

Beginning in privileged EXEC mode, follow these steps to configure IGRP. Configuring the routing process is required; other steps are optional:

	Command	Purpose
Step 1	**configure terminal**	Enter global configuration mode.
Step 2	**router igrp** *autonomous-system*	Enable an IGRP routing process, and enter router configuration mode. The AS number identifies the routes to other IGRP routers and tags routing information.
Step 3	**network** *network-number*	Associate networks with an IGRP routing process. IGRP sends updates to the interfaces in the specified networks. If an interface's network is not specified, it is not advertised in any IGRP update. It is not necessary to have a registered AS number, but if you do have a registered number, we recommend that you use it to identify your process.
Step 4	**offset list** [*access-list number* | *name*] {**in** | **out**} *offset* [*type number*]	(Optional) Apply an offset list to routing metrics to increase incoming and outgoing metrics to routes learned through IGRP. You can limit the offset list with an access list or an interface.
Step 5	**neighbor** *ip-address*	(Optional) Define a neighboring router with which to exchange routing information. This step allows routing updates from RIP (normally a broadcast protocol) to reach nonbroadcast network.
Step 6	**metric weights** *tos k1 k2 k3 k4 k5*	(Optional) Adjust the IGRP metric. By default, the IGRP composite metric is a 23-bit quantity that is the sum of the segment delays and the lowest segment bandwidth for a given route. • *tos*—Type of services; the default is 0. • *k1-k5*—Constants that convert a metric vector into a scalar quantity. Defaults for k1 and k3 are 1; all others are 0.

	Command	Purpose
Step 7	**timers basic** *update invalid holddown flush* [*sleeptime*]	(Optional) Adjust routing protocol timers. • *update*—The time (in seconds) between sending of routing updates. The default is 90 seconds. • *invalid*—The timer interval (in seconds) after which a route is declared invalid. The default is 270 seconds. • *holddown*—The time (in seconds) during which routing information about better paths is suppressed. The default is 280 seconds. • *flush*—The time (in seconds) that must pass before a route is removed from the routing table. The default is 630 seconds. • *sleeptime*—Interval in milliseconds for postponing routing updates. The default is 0.
Step 8	**no metric holddown**	(Optional) Disable the IGRP hold-down period. The route to a network is placed in holddown if the router learns that the network is farther away than previously known or is down. Holddown keeps new routing information from being used for a certain period of time. This can prevent routing loops caused by slow convergence. It is sometimes advantageous to disable holddown to increase the network's ability to quickly respond to topology changes; this command provides this function. Use the **metric holddown** command if other routers or access servers within the IGRP autonomous system are not configured with the **no metric holddown** command. If all routers are not configured the same way, you increase the possibility of routing loops.
Step 9	**metric maximum-hops** *hops*	(Optional) Configure the maximum network diameter. Routes with hop counts exceeding this diameter are not advertised. The default is 100 hops; the maximum is 255 hops.
Step 10	**no validate-update-source**	(Optional) Disable validation of the source IP address of incoming RIP routing updates. By default, the switch validates the source IP address of incoming RIP routing updates and discards the update if the source address is not valid.
Step 11	**variance** *multiplier*	(Optional) Define the variance associated with a particular path to enable unequal-cost load balancing if desired, balancing traffic across all feasible paths to converge to a new path if a path should fail. The multiplier can be from 1 to 128; the default is 1 (equal-cost load balancing).
Step 12	**traffic-share** {**balanced** | **min**}	(Optional) Distribute traffic by one of these methods: • **balanced**—Proportionately to the ratios of metrics • **min**—By the minimum-cost route.
Step 13	**end**	Return to privileged EXEC mode.
Step 14	**show ip protocols**	Verify your entries.
Step 15	**copy running-config startup-config**	(Optional) Save your entries in the configuration file.

To shut down an IGRP routing process, use the **no router igrp** global configuration command.

This example shows how to configure a router for IGRP and assign it autonomous system 109. The **network** router configuration commands show the networks directly connected to the router.

```
Switch(config)# router igrp 109
Switch(config-router)# network 131.108.0.0
Switch(config-router)# network 192.31.7.0
```

Configuring Split Horizon

Routers connected to broadcast-type IP networks and using distance-vector routing protocols normally use the split-horizon mechanism to reduce the possibility of routing loops. Split horizon blocks information about routes from being advertised by a router on any interface from which that information originated. This feature can optimize communication among multiple routers, especially when links are broken.

Note In general, we do not recommend disabling split horizon unless you are certain that your application requires it to properly advertise routes.

Beginning in privileged EXEC mode, follow these steps to disable split horizon on the interface:

	Command	Purpose
Step 1	**configure terminal**	Enter global configuration mode.
Step 2	**interface** *interface-id*	Enter interface configuration mode, and specify the interface to configure.
Step 3	**ip address** *ip-address subnet-mask*	Configure the IP address and IP subnet.
Step 4	**no ip split-horizon**	Disable split horizon on the interface.
Step 5	**end**	Return to privileged EXEC mode.
Step 6	**show ip interface** *interface-id*	Verify your entries.
Step 7	**copy running-config startup-config**	(Optional) Save your entries in the configuration file.

To enable the split horizon mechanism, use the **ip split-horizon** interface configuration command.

Configuring OSPF

This section briefly describes how to configure Open Shortest Path First (OSPF). For a complete description of the OSPF commands, refer to the "OSPF Commands" chapter of the *Cisco IOS IP and IP Routing Command Reference for Release 12.1*.

Note OSPF classifies different media into broadcast, nonbroadcast, and point-to-point networks. The Catalyst 3750 switch supports broadcast (Ethernet, Token Ring, and FDDI) and point-to-point networks (Ethernet interfaces configured as point-to-point links).

OSPF is an Interior Gateway Protocol (IGP) designed expressly for IP networks, supporting IP subnetting and tagging of externally derived routing information. OSPF also allows packet authentication and uses IP multicast when sending and receiving packets. The Cisco implementation supports RFC 1253, OSPF management information base (MIB).

The Cisco implementation conforms to the OSPF Version 2 specifications with these key features:

- Definition of stub areas is supported.
- Routes learned through any IP routing protocol can be redistributed into another IP routing protocol. At the intradomain level, this means that OSPF can import routes learned through IGRP and RIP. OSPF routes can also be exported into IGRP and RIP.
- Plain text and MD5 authentication among neighboring routers within an area is supported.
- Configurable routing interface parameters include interface output cost, retransmission interval, interface transmit delay, router priority, router dead and hello intervals, and authentication key.
- Virtual links are supported.
- Not-so-stubby-areas (NSSAs) per RFC 1587are supported.

OSPF typically requires coordination among many internal routers, *area border routers* (ABRs) connected to multiple areas, and *autonomous system boundary routers* (ASBRs). The minimum configuration would use all default parameter values, no authentication, and interfaces assigned to areas. If you customize your environment, you must ensure coordinated configuration of all routers.

This section briefly describes how to configure OSPF. It includes this information:

Note To enable OSPF, the stack master must be running the EMI.

Default OSPF Configuration

Table 26-6 shows the default OSPF configuration.

Table 26-6 Default OSPF Configuration

Feature	Default Setting
Interface parameters	Cost: No default cost predefined. Retransmit interval: 5 seconds. Transmit delay: 1 second. Priority: 1. Hello interval: 10 seconds. Dead interval: 4 times the hello interval. No authentication. No password specified. MD5 authentication disabled.
Area	Authentication type: 0 (no authentication). Default cost: 1. Range: Disabled. Stub: No stub area defined. NSSA: No NSSA area defined.
Auto cost	100 Mbps.
Default-information originate	Disabled. When enabled, the default metric setting is 10, and the external route type default is Type 2.
Default metric	Built-in, automatic metric translation, as appropriate for each routing protocol.
Distance OSPF	dist1 (all routes within an area): 110. dist2 (all routes from one area to another): 110. and dist3 (routes from other routing domains): 110.
OSPF database filter	Disabled. All outgoing link-state advertisements (LSAs) are flooded to the interface.
IP OSPF name lookup	Disabled.
Log adjacency changes	Enabled.
Neighbor	None specified.
Neighbor database filter	Disabled. All outgoing LSAs are flooded to the neighbor.
Network area	Disabled.
Router ID	No OSPF routing process defined.
Summary address	Disabled.
Timers LSA group pacing	240 seconds.

Table 26-6 Default OSPF Configuration (continued)

Feature	Default Setting
Timers shortest path first (spf)	spf delay: 5 seconds. spf-holdtime: 10 seconds.
Virtual link	No area ID or router ID defined. Hello interval: 10 seconds. Retransmit interval: 5 seconds. Transmit delay: 1 second. Dead interval: 40 seconds. Authentication key: no key predefined. Message-digest key (MD5): no key predefined.

Configuring Basic OSPF Parameters

Enabling OSPF requires that you create an OSPF routing process, specify the range of IP addresses to be associated with the routing process, and assign area IDs to be associated with that range.

Beginning in privileged EXEC mode, follow these steps to enable OSPF:

	Command	Purpose
Step 1	**configure terminal**	Enter global configuration mode.
Step 2	**router ospf** *process-id*	Enable OSPF routing, and enter router configuration mode. The process ID is an internally used identification parameter that is locally assigned and can be any positive integer. Each OSPF routing process has a unique value.
Step 3	**network** *address wildcard-mask* **area** *area-id*	Define an interface on which OSPF runs and the area ID for that interface. You can use the wildcard-mask to use a single command to define one or more multiple interfaces to be associated with a specific OSPF area. The area ID can be a decimal value or an IP address.
Step 4	**end**	Return to privileged EXEC mode.
Step 5	**show ip protocols**	Verify your entries.
Step 6	**copy running-config startup-config**	(Optional) Save your entries in the configuration file.

To terminate an OSPF routing process, use the **no router ospf** *process-id* global configuration command.

This example shows how to configure an OSPF routing process and assign it a process number of 109:

```
Switch(config)# router ospf 109
Switch(config-router)# network 131.108.0.0 255.255.255.0 area 24
```

Configuring OSPF Interfaces

You can use the **ip ospf** interface configuration commands to modify interface-specific OSPF parameters. You are not required to modify any of these parameters, but some interface parameters (hello interval, dead interval, and authentication key) must be consistent across all routers in an attached network. If you modify these parameters, be sure all routers in the network have compatible values.

Note The **ip ospf** interface configuration commands are all optional.

Beginning in privileged EXEC mode, follow these steps to modify OSPF interface parameters:

	Command	Purpose
Step 1	**configure terminal**	Enter global configuration mode.
Step 2	**interface** *interface-id*	Enter interface configuration mode, and specify the Layer 3 interface to configure.
Step 3	**ip ospf** *cost*	(Optional) Explicitly specify the cost of sending a packet on the interface.
Step 4	**ip ospf retransmit-interval** *seconds*	(Optional) Specify the number of seconds between link state advertisement transmissions. The range is 1 to 65535 seconds. The default is 5 seconds.
Step 5	**ip ospf transmit-delay** *seconds*	(Optional) Set the estimated number of seconds to wait before sending a link state update packet. The range is 1 to 65535 seconds. The default is 1 second.
Step 6	**ip ospf priority** *number*	(Optional) Set priority to help determine the OSPF designated router for a network. The range is from 0 to 255. The default is 1.
Step 7	**ip ospf hello-interval** *seconds*	(Optional) Set the number of seconds between hello packets sent on an OSPF interface. The value must be the same for all nodes on a network. The range is 1 to 65535 seconds. The default is 10 seconds.
Step 8	**ip ospf dead-interval** *seconds*	(Optional) Set the number of seconds after the last device hello packet was seen before its neighbors declare the OSPF router to be down. The value must be the same for all nodes on a network. The range is 1 to 65535 seconds. The default is 4 times the hello interval.
Step 9	**ip ospf authentication-key** *key*	(Optional) Assign a password to be used by neighboring OSPF routers. The password can be any string of keyboard-entered characters up to 8 bytes in length. All neighboring routers on the same network must have the same password to exchange OSPF information.
Step 10	**ip ospf message digest-key** *keyid* **md5** *key*	(Optional) Enable MDS authentication. • *keyid*—An identifier from 1 to 255. • *key*—An alphanumeric password of up to 16 bytes.
Step 11	**ip ospf database-filter all out**	(Optional) Block flooding of OSPF LSA packets to the interface. By default, OSPF floods new LSAs over all interfaces in the same area, except the interface on which the LSA arrives.
Step 12	**end**	Return to privileged EXEC mode.

	Command	Purpose
Step 13	**show ip ospf interface** [*interface-name*]	Display OSPF-related interface information.
Step 14	**copy running-config startup-config**	(Optional) Save your entries in the configuration file.

Use the **no** form of these commands to remove the configured parameter value or return to the default value.

Configuring OSPF Area Parameters

You can optionally configure several OSPF area parameters. These parameters include authentication for password-based protection against unauthorized access to an area, stub areas, and not-so-stubby-areas (NSSAs). *Stub areas* are areas into which information on external routes is not sent. Instead, the area border router (ABR) generates a default external route into the stub area for destinations outside the autonomous system (AS). An NSSA does not flood all LSAs from the core into the area, but can import AS external routes within the area by redistribution.

Route summarization is the consolidation of advertised addresses into a single summary route to be advertised by other areas. If network numbers are contiguous, you can use the **area range** router configuration command to configure the ABR to advertise a summary route that covers all networks in the range.

Note The OSPF **area** router configuration commands are all optional.

Beginning in privileged EXEC mode, follow these steps to configure area parameters:

	Command	Purpose
Step 1	**configure terminal**	Enter global configuration mode.
Step 2	**router ospf** *process-id*	Enable OSPF routing, and enter router configuration mode.
Step 3	**area** *area-id* **authentication**	(Optional) Allow password-based protection against unauthorized access to the identified area. The identifier can be either a decimal value or an IP address.
Step 4	**area** *area-id* **authentication message-digest**	(Optional) Enable MD5 authentication on the area.
Step 5	**area** *area-id* **stub** [**no-summary**]	(Optional) Define an area as a stub area. The **no-summary** keyword prevents an ABR from sending summary link advertisements into the stub area.
Step 6	**area** *area-id* **nssa** [**no-redistribution**] [**default-information-originate**] [**no-summary**]	(Optional) Defines an area as a not-so-stubby-area. Every router within the same area must agree that the area is NSSA. Select one of these keywords: • **no-redistribution**—Select when the router is an NSSA ABR and you want the **redistribute** command to import routes into normal areas, but not into the NSSA. • **default-information-originate**—Select on an ABR to allow importing type 7 LSAs into the NSSA. • **no-redistribution**—Select to not send summary LSAs into the NSSA.

	Command	Purpose
Step 7	**area** *area-id* **range** *address mask*	(Optional) Specify an address range for which a single route is advertised. Use this command only with area border routers.
Step 8	**end**	Return to privileged EXEC mode.
Step 9	**show ip ospf** [*process-id*]	Display information about the OSPF routing process in general or for a specific process ID to verify configuration.
	show ip ospf [*process-id* [*area-id*]] **database**	Display lists of information related to the OSPF database for a specific router.
Step 10	**copy running-config startup-config**	(Optional) Save your entries in the configuration file.

Use the **no** form of these commands to remove the configured parameter value or to return to the default value.

Configuring Other OSPF Parameters

You can optionally configure other OSPF parameters in router configuration mode.

- Route summarization: When redistributing routes from other protocols as described in the "Using Route Maps to Redistribute Routing Information" section on page 26-49, each route is advertised individually in an external LSA. To help decrease the size of the OSPF link state database, you can use the **summary-address** router configuration command to advertise a single router for all the redistributed routes included in a specified network address and mask.
- Virtual links: In OSPF, all areas must be connected to a backbone area. You can establish a virtual link in case of a backbone-continuity break by configuring two Area Border Routers as endpoints of a virtual link. Configuration information includes the identity of the other virtual endpoint (the other ABR) and the nonbackbone link that the two routers have in common (the transit area). Virtual links cannot be configured through a stub area.
- Default route: When you specifically configure redistribution of routes into an OSPF routing domain, the route automatically becomes an autonomous system boundary router (ASBR). You can force the ASBR to generate a default route into the OSPF routing domain.
- Domain Name Server (DNS) names for use in all OSPF **show** privileged EXEC command displays makes it easier to identify a router than displaying it by router ID or neighbor ID.
- Default Metrics: OSPF calculates the OSPF metric for an interface according to the bandwidth of the interface. The metric is calculated as *ref-bw* divided by bandwidth, where *ref* is 10 by default, and bandwidth (*bw*) is determined by the **bandwidth** interface configuration command. For multiple links with high bandwidth, you can specify a larger number to differentiate the cost on those links.
- Administrative distance is a rating of the trustworthiness of a routing information source, an integer between 0 and 255, with a higher value meaning a lower trust rating. An administrative distance of 255 means the routing information source cannot be trusted at all and should be ignored. OSPF uses three different administrative distances: routes within an area (interarea), routes to another area (interarea), and routes from another routing domain learned through redistribution (external). You can change any of the distance values.
- Passive interfaces: Because interfaces between two devices on an Ethernet represent only one network segment, to prevent OSPF from sending hello packets for the sending interface, you must configure the sending device to be a passive interface. Both devices can identify each other through the hello packet for the receiving interface.

- Route calculation timers: You can configure the delay time between when OSPF receives a topology change and when it starts the shortest path first (SPF) calculation and the hold time between two SPF calculations.
- Log neighbor changes: You can configure the router to send a syslog message when an OSPF neighbor state changes, providing a high-level view of changes in the router.

Beginning in privileged EXEC mode, follow these steps to configure these OSPF parameters:

	Command	Purpose
Step 1	**configure terminal**	Enter global configuration mode.
Step 2	**router ospf** *process-id*	Enable OSPF routing, and enter router configuration mode.
Step 3	**summary-address** *address mask*	(Optional) Specify an address and IP subnet mask for redistributed routes so that only one summary route is advertised.
Step 4	**area** *area-id* **virtual-link** router-id [**hello-interval** *seconds*] [**retransmit-interval** *seconds*] [**trans**] [[**authentication-key** *key*] | **message-digest-key** *keyid* **md5** *key*]]	(Optional) Establish a virtual link and set its parameters. See the "Configuring OSPF Interfaces" section on page 26-33 for parameter definitions and Table 26-6 on page 26-31 for virtual link defaults.
Step 5	**default-information originate** [**always**] [**metric** *metric-value*] [**metric-type** *type-value*] [**route-map** *map-name*]	(Optional) Force the ASBR to generate a default route into the OSPF routing domain. Parameters are all optional.
Step 6	**ip ospf name-lookup**	(Optional) Configure DNS name lookup. The default is disabled.
Step 7	**ip auto-cost reference-bandwidth** *ref-bw*	(Optional) Specify an address range for which a single route will be advertised. Use this command only with area border routers.
Step 8	**distance ospf** {[**inter-area** *dist1*] [**inter-area** *dist2*] [**external** *dist3*]}	(Optional) Change the OSPF distance values. The default distance for each type of route is 110. The range is 1 to 255.
Step 9	**passive-interface** *type number*	(Optional) Suppress the sending of hello packets through the specified interface.
Step 10	**timers spf** *spf-delay spf-holdtime*	(Optional) Configure route calculation timers. • *spf-delay*—Enter an integer from 0 to 65535. The default is 5 seconds; 0 means no delay. • *spf-holdtime*—Enter an integer from 0 to 65535. The default is 10 seconds; 0 means no delay.
Step 11	**ospf log-adj-changes**	(Optional) Send syslog message when a neighbor state changes.
Step 12	**end**	Return to privileged EXEC mode.
Step 13	**show ip ospf** [*process-id* [*area-id*]] **database**	Display lists of information related to the OSPF database for a specific router. For some of the keyword options, see to the "Monitoring OSPF" section on page 26-38.
Step 14	**copy running-config startup-config**	(Optional) Save your entries in the configuration file.

Changing LSA Group Pacing

The OSPF LSA group pacing feature allows the router to group OSPF LSAs and pace the refreshing, check-summing, and aging functions for more efficient router use. This feature is enabled by default with a 4-minute default pacing interval, and you will not usually need to modify this parameter. The optimum group pacing interval is inversely proportional to the number of LSAs the router is refreshing, check-summing, and aging. For example, if you have approximately 10,000 LSAs in the database, decreasing the pacing interval would benefit you. If you have a very small database (40 to 100 LSAs), increasing the pacing interval to 10 to 20 minutes might benefit you slightly.

Beginning in privileged EXEC mode, follow these steps to configure OSPF LSA pacing:

	Command	Purpose
Step 1	**configure terminal**	Enter global configuration mode.
Step 2	**router ospf** *process-id*	Enable OSPF routing, and enter router configuration mode.
Step 3	**timers lsa-group-pacing** *seconds*	Change the group pacing of LSAs.
Step 4	**end**	Return to privileged EXEC mode.
Step 5	**show running-config**	Verify your entries.
Step 6	**copy running-config startup-config**	(Optional) Save your entries in the configuration file.

To return to the default value, use the **no timers lsa-group-pacing** router configuration command.

Configuring a Loopback Interface

OSPF uses the highest IP address configured on the interfaces as its router ID. If this interface is down or removed, the OSPF process must recalculate a new router ID and resend all its routing information out its interfaces. If a loopback interface is configured with an IP address, OSPF uses this IP address as its router ID, even if other interfaces have higher IP addresses. Because loopback interfaces never fail, this provides greater stability. OSPF automatically prefers a loopback interface over other interfaces, and it chooses the highest IP address among all loopback interfaces.

Beginning in privileged EXEC mode, follow these steps to configure a loopback interface:

	Command	Purpose
Step 1	**configure terminal**	Enter global configuration mode.
Step 2	**interface loopback 0**	Create a loopback interface, and enter interface configuration mode.
Step 3	**ip address** *address mask*	Assign an IP address to this interface.
Step 4	**end**	Return to privileged EXEC mode.
Step 5	**show ip interface**	Verify your entries.
Step 6	**copy running-config startup-config**	(Optional) Save your entries in the configuration file.

Use the **no interface loopback 0** global configuration command to disable the loopback interface.

Monitoring OSPF

You can display specific statistics such as the contents of IP routing tables, caches, and databases.

Table 26-7 lists some of the privileged EXEC commands for displaying statistics. For more **show ip ospf database** privileged EXEC command options and for explanations of fields in the resulting display, refer to the *Cisco IOS IP and IP Routing Command Reference for Release 12.1*.

Table 26-7 Show IP OSPF Statistics Commands

Command	Purpose
show ip ospf [*process-id*]	Display general information about OSPF routing processes.
show ip ospf [*process-id*] **database** [**router**] [*link-state-id*] **show ip ospf** [*process-id*] **database** [**router**] [**self-originate**] **show ip ospf** [*process-id*] **database** [**router**] [**adv-router** [*ip-address*]] **show ip ospf** [*process-id*] **database** [**network**] [*link-state-id*] **show ip ospf** [*process-id*] **database** [**summary**] [*link-state-id*] **show ip ospf** [*process-id*] **database** [**asbr-summary**] [*link-state-id*] **show ip ospf** [*process-id*] **database** [**external**] [*link-state-id*] **show ip ospf** [*process-id area-id*] **database** [**database-summary**]	Display lists of information related to the OSPF database.
show ip ospf border-routes	Display the internal OSPF routing ABR and ASBR table entries.
show ip ospf interface [*interface-name*]	Display OSPF-related interface information.
show ip ospf neighbor [*interface-name*] [*neighbor-id*] **detail**	Display OSPF interface neighbor information.
show ip ospf virtual-links	Display OSPF-related virtual links information.

Configuring EIGRP

Enhanced IGRP (EIGRP) is a Cisco proprietary enhanced version of the IGRP. Enhanced IGRP uses the same distance vector algorithm and distance information as IGRP; however, the convergence properties and the operating efficiency of Enhanced IGRP are significantly improved.

The convergence technology employs an algorithm referred to as the Diffusing Update Algorithm (DUAL), which guarantees loop-free operation at every instant throughout a route computation and allows all devices involved in a topology change to synchronize at the same time. Routers that are not affected by topology changes are not involved in recomputations.

IP EIGRP provides increased network width. With RIP, the largest possible width of your network is 15 hops. When IGRP is enabled, the largest possible width is 224 hops. Because the EIGRP metric is large enough to support thousands of hops, the only barrier to expanding the network is the transport-layer hop counter. EIGRP increments the transport control field only when an IP packet has traversed 15 routers and the next hop to the destination was learned through EIGRP. When a RIP route is used as the next hop to the destination, the transport control field is incremented as usual.

EIGRP offers these features:

- Fast convergence.
- Incremental updates when the state of a destination changes, instead of sending the entire contents of the routing table, minimizing the bandwidth required for EIGRP packets.
- Less CPU usage than IGRP because full update packets need not be processed each time they are received.
- Protocol-independent neighbor discovery mechanism to learn about neighboring routers.
- Variable-length subnet masks (VLSMs).
- Arbitrary route summarization.
- EIGRP scales to large networks.

Enhanced IGRP has these four basic components:

- *Neighbor discovery and recovery* is the process that routers use to dynamically learn of other routers on their directly attached networks. Routers must also discover when their neighbors become unreachable or inoperative. Neighbor discovery and recovery is achieved with low overhead by periodically sending small hello packets. As long as hello packets are received, the Cisco IOS software can determine that a neighbor is alive and functioning. When this status is determined, the neighboring routers can exchange routing information.
- *The reliable transport protocol* is responsible for guaranteed, ordered delivery of EIGRP packets to all neighbors. It supports intermixed transmission of multicast and unicast packets. Some EIGRP packets must be sent reliably, and others need not be. For efficiency, reliability is provided only when necessary. For example, on a multiaccess network that has multicast capabilities (such as Ethernet), it is not necessary to send hellos reliably to all neighbors individually. Therefore, EIGRP sends a single multicast hello with an indication in the packet informing the receivers that the packet need not be acknowledged. Other types of packets (such as updates) require acknowledgment, which is shown in the packet. The reliable transport has a provision to send multicast packets quickly when there are unacknowledged packets pending. Doing so helps ensure that convergence time remains low in the presence of varying speed links.
- *The DUAL finite state machine* embodies the decision process for all route computations. It tracks all routes advertised by all neighbors. DUAL uses the distance information (known as a metric) to select efficient, loop-free paths. DUAL selects routes to be inserted into a routing table based on feasible successors. A successor is a neighboring router used for packet forwarding that has a least-cost path to a destination that is guaranteed not to be part of a routing loop. When there are no

feasible successors, but there are neighbors advertising the destination, a recomputation must occur. This is the process whereby a new successor is determined. The amount of time it takes to recompute the route affects the convergence time. Recomputation is processor-intensive; it is advantageous to avoid recomputation if it is not necessary. When a topology change occurs, DUAL tests for feasible successors. If there are feasible successors, it uses any it finds to avoid unnecessary recomputation.

- The *protocol-dependent modules* are responsible for network layer protocol-specific tasks. An example is the IP EIGRP module, which is responsible for sending and receiving EIGRP packets that are encapsulated in IP. It is also responsible for parsing EIGRP packets and informing DUAL of the new information received. EIGRP asks DUAL to make routing decisions, but the results are stored in the IP routing table. EIGRP is also responsible for redistributing routes learned by other IP routing protocols.

This section briefly describes how to configure EIGRP. It includes this information:

- Default EIGRP Configuration, page 26-40
- Configuring Basic EIGRP Parameters, page 26-41
- Configuring EIGRP Interfaces, page 26-42
- Configuring EIGRP Route Authentication, page 26-43
- Monitoring and Maintaining EIGRP, page 26-44

Note To enable EIGRP, the stack master must be running the EMI.

Default EIGRP Configuration

Table 26-8 shows the default EIGRP configuration.

Table 26-8 Default EIGRP Configuration

Feature	Default Setting
Auto summary	Enabled. Subprefixes are summarized to the classful network boundary when crossing classful network boundaries.
Default-information	Exterior routes are accepted and default information is passed between IGRP or EIGRP processes when doing redistribution.
Default metric	Only connected routes and interface static routes can be redistributed without a default metric. The metric includes: • Bandwidth: 0 or greater kbps. • Delay (tens of microseconds): 0 or any positive number that is a multiple of 39.1 nanoseconds. • Reliability: any number between 0 and 255 (255 means 100 percent reliability). • Loading: effective bandwidth as a number between 0 and 255 (255 is 100 percent loading). • MTU: maximum transmission unit size of the route in bytes. 0 or any positive integer.

Table 26-8 Default EIGRP Configuration (continued)

Feature	Default Setting
Distance	Internal distance: 90. External distance: 170.
EIGRP log-neighbor changes	Disabled. No adjacency changes logged.
IP authentication key-chain	No authentication provided.
IP authentication mode	No authentication provided.
IP bandwidth-percent	50 percent.
IP hello interval	For low-speed nonbroadcast multiaccess (NBMA) networks: 60 seconds; all other networks: 5 seconds.
IP hold-time	For low-speed NBMA networks: 180 seconds; all other networks: 15 seconds.
IP split-horizon	Enabled.
IP summary address	No summary aggregate addresses are predefined.
Metric weights	tos: 0; k1 and k3: 1; k2, k4, and k5: 0
Network	None specified.
Offset-list	Disabled.
Router EIGRP	Disabled.
Set metric	No metric set in the route map.
Traffic-share	Distributed proportionately to the ratios of the metrics.
Variance	1 (equal-cost load balancing).

To create an EIGRP routing process, you must enable EIGRP and associate networks. EIGRP sends updates to the interfaces in the specified networks. If you do not specify an interface network, it is not advertised in any EIGRP update.

Note If you have routers on your network that are configured for IGRP, and you want to change to EIGRP, you must designate transition routers that have both IGRP and EIGRP configured. In these cases, perform Steps 1 through 3 in the next section and also see the "Configuring IGRP" section on page 26-25. You must use the same AS number for routes to be automatically redistributed.

Configuring Basic EIGRP Parameters

Beginning in privileged EXEC mode, follow these steps to configure EIGRP. Configuring the routing process is required; other steps are optional:

	Command	Purpose
Step 1	**configure terminal**	Enter global configuration mode.
Step 2	**router eigrp** *autonomous-system*	Enable an EIGRP routing process, and enter router configuration mode. The AS number identifies the routes to other EIGRP routers and is used to tag routing information.

	Command	Purpose
Step 3	**network** *network-number*	Associate networks with an EIGRP routing process. EIGRP sends updates to the interfaces in the specified networks. If an interface's network is not specified, it is not advertised in any IGRP or EIGRP update.
Step 4	**eigrp log-neighbor-changes**	(Optional) Enable logging of EIGRP neighbor changes to monitor routing system stability.
Step 5	**metric weights** *tos k1 k2 k3 k4 k5*	(Optional) Adjust the EIGRP metric. Although the defaults have been carefully determined to provide excellent operation in most networks, you can adjust them. **Caution** Determining metrics is complex and is not recommended without guidance from an experienced network designer.
Step 6	**offset list** [*access-list number* | *name*] {**in** | **out**} *offset* [*type number*]	(Optional) Apply an offset list to routing metrics to increase incoming and outgoing metrics to routes learned through EIGRP. You can limit the offset list with an access list or an interface.
Step 7	**no auto-summary**	(Optional) Disable automatic summarization of subnet routes into network-level routes.
Step 8	**ip summary-address eigrp** *autonomous-system-number address mask*	(Optional) Configure a summary aggregate.
Step 9	**end**	Return to privileged EXEC mode.
Step 10	**show ip protocols**	Verify your entries.
Step 11	**copy running-config startup-config**	(Optional) Save your entries in the configuration file.

Use the **no** forms of these commands to disable the feature or return the setting to the default value.

Configuring EIGRP Interfaces

Other optional EIGRP parameters can be configured on an interface basis.

Beginning in privileged EXEC mode, follow these steps to configure EIGRPinterfaces:

	Command	Purpose
Step 1	**configure terminal**	Enter global configuration mode.
Step 2	**interface** *interface-id*	Enter interface configuration mode, and specify the Layer 3 interface to configure.
Step 3	**ip bandwidth-percent eigrp** *percent*	(Optional) Configure the percentage of bandwidth that can be used by EIGRP on an interface. The default is 50 percent.
Step 4	**ip summary-address eigrp** *autonomous-system-number address mask*	(Optional) Configure a summary aggregate address for a specified interface (not usually necessary if auto-summary is enabled).

	Command	Purpose
Step 5	**ip hello-interval eigrp** *autonomous-system-number seconds*	(Optional) Change the hello time interval for an EIGRP routing process. The range is 1 to 65535 seconds. The default is 60 seconds for low-speed NBMA networks and 5 seconds for all other networks.
Step 6	**ip hold-time eigrp** *autonomous-system-number seconds*	(Optional) Change the hold time interval for an EIGRP routing process. The range is 1 to 65535 seconds. The default is 180 seconds for low-speed NBMA networks and 15 seconds for all other networks. **Caution** Do not adjust the hold time without consulting Cisco technical support.
Step 7	**no ip split-horizon eigrp** *autonomous-system-number*	(Optional) Disable split horizon to allow route information to be advertised by a router out any interface from which that information originated.
Step 8	**end**	Return to privileged EXEC mode.
Step 9	**show ip eigrp interface**	Display which interfaces EIGRP is active on and information about EIGRP relating to those interfaces.
Step 10	**copy running-config startup-config**	(Optional) Save your entries in the configuration file.

Use the **no** forms of these commands to disable the feature or return the setting to the default value.

Configuring EIGRP Route Authentication

EIGRP route authentication provides MD5 authentication of routing updates from the EIGRP routing protocol to prevent the introduction of unauthorized or false routing messages from unapproved sources.

Beginning in privileged EXEC mode, follow these steps to enable authentication:

	Command	Purpose
Step 1	**configure terminal**	Enter global configuration mode.
Step 2	**interface** *interface-id*	Enter interface configuration mode, and specify the Layer 3 interface to configure.
Step 3	**ip authentication mode eigrp** *autonomous-system* **md5**	Enable MD5 authentication in IP EIGRP packets.
Step 4	**ip authentication key-chain eigrp** *autonomous-system key-chain*	Enable authentication of IP EIGRP packets.
Step 5	**exit**	Return to global configuration mode.
Step 6	**key chain** *name-of-chain*	Identify a key chain and enter key-chain configuration mode. Match the name configured in Step 4.
Step 7	**key** *number*	In key-chain configuration mode, identify the key number.
Step 8	**key-string** *text*	In key-chain key configuration mode, identify the key string.

	Command	Purpose
Step 9	**accept-lifetime** *start-time* {**infinite** | *end-time* | **duration** *seconds*}	(Optional) Specify the time period during which the key can be received. The *start-time* and *end-time* syntax can be either *hh*:*mm*:*ss Month date year* or *hh*:*mm*:*ss date Month year*. The default is forever with the default *start-time* and the earliest acceptable date as January 1, 1993. The default *end-time* and **duration** is **infinite**.
Step 10	**send-lifetime** *start-time* {**infinite** | *end-time* | **duration** *seconds*}	(Optional) Specify the time period during which the key can be sent. The *start-time* and *end-time* syntax can be either *hh*:*mm*:*ss Month date year* or *hh*:*mm*:*ss date Month year*. The default is forever with the default *start-time* and the earliest acceptable date as January 1, 1993. The default *end-time* and **duration** is **infinite**.
Step 11	**end**	Return to privileged EXEC mode.
Step 12	**show key chain**	Display authentication key information.
Step 13	**copy running-config startup-config**	(Optional) Save your entries in the configuration file.

Use the **no** forms of these commands to disable the feature or to return the setting to the default value.

Monitoring and Maintaining EIGRP

You can delete neighbors from the neighbor table. You can also display various EIGRP routing statistics. Table 26-9 lists the privileged EXEC commands for deleting neighbors and displaying statistics. For explanations of fields in the resulting display, refer to the *Cisco IOS IP and IP Routing Command Reference for Release 12.1*.

Table 26-9 IP EIGRP Clear and Show Commands

Command	Purpose
clear ip eigrp neighbors [*if-address* | *interface*]	Delete neighbors from the neighbor table.
show ip eigrp interface [*interface*] [*as number*]	Display information about interfaces configured for EIGRP.
show ip eigrp neighbors [*type-number*]	Display EIGRP discovered neighbors.
show ip eigrp topology [*autonomous-system-number*] | [[*ip-address*] *mask*]]	Display the EIGRP topology table for a given process.
show ip eigrp traffic [*autonomous-system-number*]	Display the number of packets sent and received for all or a specified EIGRP process.

Configuring Protocol-Independent Features

This section describes how to configure IP routing protocol-independent features. These features are available on switches running the SMI or the EMI; except that with the SMI, protocol-related features are available only for RIP. For a complete description of the IP routing protocol-independent commands in this chapter, refer to the "IP Routing Protocol-Independent Commands" chapter of the *Cisco IOS IP and IP Routing Command Reference for Release 12.1*.

This section includes these procedures:

Configuring Distributed Cisco Express Forwarding

Cisco Express Forwarding (CEF) is a Layer 3 IP switching technology used to optimize network performance. CEF implements an advanced IP look-up and forwarding algorithm to deliver maximum Layer 3 switching performance. CEF is less CPU-intensive than fast switching route caching, allowing more CPU processing power to be dedicated to packet forwarding. In a Catalyst 3750 switch stack, the hardware uses distributed CEF (dCEF) to achieve Gigabit-speed line rate IP traffic for each switch in the stack. In dynamic networks, fast switching cache entries are frequently invalidated because of routing changes, which can cause traffic to be process switched using the routing table, instead of fast switched using the route cache. CEF and dCEF use the Forwarding Information Base (FIB) lookup table to perform destination-based switching of IP packets.

The two main components in dCEF are the distributed FIB and the distributed adjacency tables.

- The FIB is similar to a routing table or information base and maintains a mirror image of the forwarding information in the IP routing table. When routing or topology changes occur in the network, the IP routing table is updated, and those changes are reflected in the FIB. The FIB maintains next-hop address information based on the information in the IP routing table. Because the FIB contains all known routes that exist in the routing table, CEF eliminates route cache maintenance, is more efficient for switching traffic, and is not affected by traffic patterns.
- Nodes in the network are said to be adjacent if they can reach each other with a single hop across a link layer. CEF uses adjacency tables to prepend Layer 2 addressing information. The adjacency table maintains Layer 2 next-hop addresses for all FIB entries.

Distributed CEF is enabled globally by default. If for some reason it is disabled, you can re-enable it by using the **ip cef distributed** global configuration command.

The default configuration is dCEF enabled on all Layer 3 interfaces.

Caution Although the **no ip route-cache cef** interface configuration command to disable CEF on an interface is visible in the CLI, we strongly recommend that you do not disable dCEF on interfaces.

Beginning in privileged EXEC mode, follow these steps to enable dCEF globally and on an interface in case, if, for some reason, it has been disabled:

	Command	Purpose
Step 1	**configure terminal**	Enter global configuration mode.
Step 1	**ip cef distributed**	Enable dCEF operation.
Step 2	**interface** *interface-id*	Enter interface configuration mode, and specify the Layer 3 interface to configure.
Step 3	**ip route-cache cef**	Enable CEF on the interface.
Step 4	**end**	Return to privileged EXEC mode.
Step 5	**show ip cef**	Display the CEF status on all interfaces.
Step 6	**show cef linecard** [*slot-number*] [**detail**]	Display CEF-related interface information by stack member for all switches in the stack or for the specified switch. (Optional) For *slot-number*, enter the stack member switch number.
Step 7	**show cef interface** [*interface-id*]	Display detailed CEF information for all interfaces or the specified interface.
Step 8	**show adjacency**	Display CEF adjacency table information.
Step 9	**copy running-config startup-config**	(Optional) Save your entries in the configuration file.

Configuring the Number of Equal-Cost Routing Paths

When a router has two or more routes to the same network with the same metrics, these routes can be thought of as having an equal cost. The term *parallel path* is another way to refer to occurrences of equal-cost routes in a routing table. If a router has two or more equal-cost paths to a network, it can use them concurrently. Parallel paths provide redundancy in case of a circuit failure and also enable a router to load balance packets over the available paths for more efficient use of available bandwidth. Equal-cost routes are supported across switches in a stack.

Although the router automatically learns about and configures equal-cost routes, you can control the maximum number of parallel paths supported by an IP routing protocol in its routing table.

Beginning in privileged EXEC mode, follow these steps to change the maximum number of parallel paths installed in a routing table from the default:

	Command	Purpose
Step 1	**configure terminal**	Enter global configuration mode.
Step 2	**router** {**rip** | **ospf** | **igrp** | **eigrp**}	Enter router configuration mode.
Step 3	**maximum-paths** *maximum*	Set the maximum number of parallel paths for the protocol routing table. The range is from 1 to 8; the default is 4.
Step 4	**end**	Return to privileged EXEC mode.
Step 5	**show ip protocols**	Verify the setting in the *Maximum path* field.
Step 6	**copy running-config startup-config**	(Optional) Save your entries in the configuration file.

Use the **no maximum-paths** router configuration command to restore the default value.

Configuring Static Routes

Static unicast routes are user-defined routes that cause packets moving between a source and a destination to take a specified path. Static routes can be important if the router cannot build a route to a particular destination and are useful for specifying a gateway of last resort to which all unroutable packets are sent.

Beginning in privileged EXEC mode, follow these steps to configure a static route:

	Command	Purpose
Step 1	**configure terminal**	Enter global configuration mode.
Step 2	**ip route** *prefix mask* {*address* | *interface*} [*distance*]	Establish a static route.
Step 3	**end**	Return to privileged EXEC mode.
Step 4	**show ip route**	Display the current state of the routing table to verify the configuration.
Step 5	**copy running-config startup-config**	(Optional) Save your entries in the configuration file.

Use the **no ip route** *prefix mask* {*address* | *interface*} global configuration command to remove a static route.

The switch retains static routes until you remove them. However, you can override static routes with dynamic routing information by assigning administrative distance values. Each dynamic routing protocol has a default administrative distance, as listed in Table 26-10. If you want a static route to be overridden by information from a dynamic routing protocol, set the administrative distance of the static route higher than that of the dynamic protocol.

Table 26-10 Dynamic Routing Protocol Default Administrative Distances

Route Source	Default Distance
Connected interface	0
Static route	1
Enhanced IRGP summary route	5
Internal Enhanced IGRP	90
IGRP	100
OSPF	110
RIP	120
Unknown	225

Static routes that point to an interface are advertised through RIP, IGRP, and other dynamic routing protocols, whether or not static **redistribute** router configuration commands were specified for those routing protocols. These static routes are advertised because static routes that point to an interface are considered in the routing table to be connected and hence lose their static nature. However, if you define a static route to an interface that is not one of the networks defined in a network command, no dynamic routing protocols advertise the route unless a **redistribute** static command is specified for these protocols.

When an interface goes down, all static routes through that interface are removed from the IP routing table. When the software can no longer find a valid next hop for the address specified as the forwarding router's address in a static route, the static route is also removed from the IP routing table.

Specifying Default Routes and Networks

A router might not be able to determine the routes to all other networks. To provide complete routing capability, you can use some routers as smart routers and give the remaining routers default routes to the smart router. (Smart routers have routing table information for the entire internetwork.) These default routes can be dynamically learned or can be configured in the individual routers. Most dynamic interior routing protocols include a mechanism for causing a smart router to generate dynamic default information that is then forwarded to other routers.

If a router has a directly connected interface to the specified default network, the dynamic routing protocols running on that device generate a default route. In RIP, it advertises the pseudonetwork 0.0.0.0. In IGRP, the network itself is advertised and flagged as an exterior route.

A router that is generating the default for a network also might need a default of its own. One way a router can generate its own default is to specify a static route to the network 0.0.0.0 through the appropriate device.

Beginning in privileged EXEC mode, follow these steps to define a static route to a network as the static default route:

	Command	Purpose
Step 1	**configure terminal**	Enter global configuration mode.
Step 2	**ip default-network** *network number*	Specify a default network.
Step 3	**end**	Return to privileged EXEC mode.
Step 4	**show ip route**	Display the selected default route in the gateway of last resort display.
Step 5	**copy running-config startup-config**	(Optional) Save your entries in the configuration file.

Use the **no ip default-network** *network number* global configuration command to remove the route.

When default information is passed through a dynamic routing protocol, no further configuration is required. The system periodically scans its routing table to choose the optimal default network as its default route. In IGRP networks, there might be several candidate networks for the system default. Cisco routers use administrative distance and metric information to determine the default route or the gateway of last resort.

If dynamic default information is not being passed to the system, candidates for the default route are specified with the **ip default-network** global configuration command. If this network appears in the routing table from any source, it is flagged as a possible choice for the default route. If the router has no interface on the default network, but does have a path to it, the network is considered as a possible candidate, and the gateway to the best default path becomes the gateway of last resort.

Using Route Maps to Redistribute Routing Information

The switch can run multiple routing protocols simultaneously, and it can redistribute information from one routing protocol to another. For example, you can instruct the switch to readvertise IGRP-derived routes by using RIP or to readvertise static routes by using IGRP. Redistributing information from one routing protocol to another applies to all supported IP-based routing protocols.

You can also conditionally control the redistribution of routes between routing domains by defining route maps between the two domains. The **match** and **set** route-map configuration commands define the condition portion of a route map. The **match** command specifies that a criterion must be matched; the **set** command specifies an action to be taken if the routing update meets the conditions defined by the match command. Although redistribution is a protocol-independent feature, some of the **match** and **set** route-map configuration commands are specific to a particular protocol.

One or more **match** commands and one or more **set** commands follow a **route-map** command. If there are no **match** commands, everything matches. If there are no **set** commands, nothing is done, other than the match. Therefore, you need at least one **match** or **set** command.

Note Although each of Steps 3 through 14 in the following section is optional, you must enter at least one **match** route-map configuration command and one **set** route-map configuration command.

Beginning in privileged EXEC mode, follow these steps to configure a route map for redistribution:

	Command	Purpose
Step 1	**configure terminal**	Enter global configuration mode.
Step 2	**route-map** *map-tag* [**permit** | **deny**] [*sequence number*]	Define any route maps used to control redistribution and enter route-map configuration mode. *map-tag*—A meaningful name for the route map. The **redistribute** router configuration command uses this name to reference this route map. Multiple route maps might share the same map tag name. (Optional) If **permit** is specified and the match criteria are met for this route map, the route is redistributed as controlled by the set actions. If **deny** is specified, the route is not redistributed. *sequence number* (Optional)— Number that indicates the position a new route map is to have in the list of route maps already configured with the same name.
Step 3	**match ip address** {*access-list-number* | *access-list-name*} [*...access-list-number* | *...access-list-name*]	Match a standard access list by specifying the name or number. It can be an integer from 1 to 199.
Step 4	**match metric** *metric-value*	Match the specified route metric. The *metric-value* can be an IGRP five-part metric with a specified value from 0 to 4294967295.
Step 5	**match ip next-hop** {*access-list-number* | *access-list-name*} [*...access-list-number* | *...access-list-name*]	Match a next-hop router address passed by one of the access lists specified (numbered from 1 to 199).

	Command	Purpose
Step 6	**match tag** *tag value* [*...tag-value*]	Match the specified tag value in a list of one or more route tag values. Each can be an integer from 0 to 4294967295.
Step 7	**match interface** *type number* [*...type number*]	Match the specified next hop route out one of the specified interfaces.
Step 8	**match ip route-source** {*access-list-number* | *access-list-name*} [*...access-list-number* | *...access-list-name*]	Match the address specified by the specified advertised access lists.
Step 9	**match route-type** {**internal** | **external** [**type-1** | **type-2**]}	Match the specified **route-type**: • **internal**—OSPF intra-area and interarea routes or EIGRP internal routes. • **external**—OSPF external routes (Type 1 or Type 2) or EIGRP external routes.
Step 10	**set level** {**level-1** | **level-2** | **level-1-2** | **stub-area** | **backbone**}	Set the level for routes that are advertised into the specified area of the routing domain. The **stub-area** and **backbone** are OSPF NSSA and backbone areas.
Step 11	**set metric** *metric value*	Set the metric value to give the redistributed routes (for any protocol except IGRP or EIGRP). The *metric value* is an integer from -294967295 to 294967295.
Step 12	**set metric** *bandwidth delay reliability loading mtu*	Set the metric value to give the redistributed routes (for IGRP or EIGRP only): • *bandwidth*—Metric value or IGRP bandwidth of the route in kilobits per second in the range 0 to 4294967295 • *delay*—Route delay in tens of microseconds in the range 0 to 4294967295. • *reliability*—Likelihood of successful packet transmission expressed as a number between 0 and 255, where 255 means 100 percent reliability and 0 means no reliability. • *loading*— Effective bandwidth of the route expressed as a number from 0 to 255 (255 is 100 percent loading). • *mtu*—Minimum maximum transmission unit (MTU) size of the route in bytes in the range 0 to 4294967295.
Step 13	**set metric-type** {**type-1** | **type-2**}	Set the OSPF external metric type for redistributed routes.
Step 14	**end**	Return to privileged EXEC mode.
Step 15	**show route-map**	Display all route maps configured or only the one specified to verify configuration.
Step 16	**copy running-config startup-config**	(Optional) Save your entries in the configuration file.

To delete an entry, use the **no route-map** *map tag* global configuration command or the **no match** or **no set** route-map configuration commands.

You can distribute routes from one routing domain into another and control route distribution.

Beginning in privileged EXEC mode, follow these steps to control route redistribution. Note that the keywords are the same as defined in the previous procedure.

	Command	Purpose
Step 1	**configure terminal**	Enter global configuration mode.
Step 2	**router** {**rip** | **ospf** | **igrp** | **eigrp**}	Enter router configuration mode.
Step 3	**redistribute** *protocol* [*process-id*] {**level-1** | **level-1-2** | **level-2**} [**metric** *metric-value*] [**metric-type** *type-value*] [**match internal** | **external** *type-value*] [**tag** *tag-value*] [**route-map** *map-tag*] [**weight** *weight*] [**subnets**]	Redistribute routes from one routing protocol to another routing protocol. If no route-maps are specified, all routes are redistributed. If the keyword **route-map** is specified with no *map-tag*, no routes are distributed.
Step 4	**default-metric** *number*	Cause the current routing protocol to use the same metric value for all redistributed routes (RIP and OSPF).
Step 5	**default-metric** *bandwidth delay reliability loading mtu*	Cause the IGRP or EIGRP routing protocol to use the same metric value for all non-IGRP redistributed routes.
Step 6	**no default-information** {**in** | **out**}	Disable the redistribution of default information between IGRP processes, which is enabled by default.
Step 7	**end**	Return to privileged EXEC mode.
Step 8	**show route-map**	Display all route maps configured or only the one specified to verify configuration.
Step 9	**copy running-config startup-config**	(Optional) Save your entries in the configuration file.

To disable redistribution, use the **no** form of the commands.

The metrics of one routing protocol do not necessarily translate into the metrics of another. For example, the RIP metric is a hop count, and the IGRP metric is a combination of five qualities. In these situations, an artificial metric is assigned to the redistributed route. Uncontrolled exchanging of routing information between different routing protocols can create routing loops and seriously degrade network operation.

If you have not defined a default redistribution metric that replaces metric conversion, some automatic metric translations occur between routing protocols:

- RIP can automatically redistribute static routes. It assigns static routes a metric of 1 (directly connected).
- IGRP can automatically redistribute static routes and information from other IGRP-routed autonomous systems. IGRP assigns static routes a metric that identifies them as directly connected. It does not change the metrics of routes derived from IGRP updates from other autonomous systems.
- Any protocol can redistribute other routing protocols if a default mode is in effect.

Filtering Routing Information

You can filter routing protocol information by performing the tasks described in this section.

Note When routes are redistributed between OSPF processes, no OSPF metrics are preserved.

Setting Passive Interfaces

To prevent other routers on a local network from dynamically learning about routes, you can use the **passive-interface** router configuration command to keep routing update messages from being sent through a router interface. When you use this command in the OSPF protocol, the interface address you specify as passive appears as a stub network in the OSPF domain. OSPF routing information is neither sent nor received through the specified router interface.

In networks with many interfaces, to avoid having to manually set them as passive, you can set all interfaces to be passive by default by using the **passive-interface default** router configuration command and manually setting interfaces where adjacencies are desired.

Beginning in privileged EXEC mode, follow these steps to configure passive interfaces:

	Command	Purpose
Step 1	**configure terminal**	Enter global configuration mode.
Step 2	**router** {**rip** | **ospf** | **igrp** | **eigrp**}	Enter router configuration mode.
Step 3	**passive-interface** *interface-id*	Suppress sending routing updates through the specified Layer 3 interface.
Step 4	**passive-interface default**	(Optional) Set all interfaces as passive by default.
Step 5	**no passive-interface** *interface type*	(Optional) Activate only those interfaces that need to have adjacencies sent.
Step 6	**network** *network-address*	(Optional) Specify the list of networks for the routing process. The *network-address* is an IP address.
Step 7	**end**	Return to privileged EXEC mode.
Step 8	**copy running-config startup-config**	(Optional) Save your entries in the configuration file.

Use a network monitoring privileged EXEC command such as **show ip ospf interface** to verify the interfaces that you enabled as passive, or use the **show ip interface** privileged EXEC command to verify the interfaces that you enabled as active.

To re-enable the sending of routing updates, use the **no passive-interface** *interface-id* router configuration command. The **default** keyword sets all interfaces as passive by default. You can then configure individual interfaces where you want adjacencies by using the **no passive-interface** router configuration command. The **default** keyword is useful in Internet service provider and large enterprise networks where many of the distribution routers have more than 200 interfaces.

Controlling Advertising and Processing in Routing Updates

You can use the **distribute-list** router configuration command with access control lists to suppress routes from being advertised in routing updates and to prevent other routers from learning one or more routes. When used in OSPF, this feature applies to only external routes, and you cannot specify an interface name.

You can also use a **distribute-list** router configuration command to avoid processing certain routes listed in incoming updates. (This feature does not apply to OSPF.)

Beginning in privileged EXEC mode, follow these steps to control the advertising or processing of routing updates:

	Command	Purpose
Step 1	**configure terminal**	Enter global configuration mode.
Step 2	**router** {**rip** | **igrp** | **eigrp**}	Enter router configuration mode.
Step 3	**distribute-list** {*access-list-number* | *access-list-name*} **out** [*interface-name* | *routing process* | *autonomous-system-number*]	Permit or deny routes from being advertised in routing updates, depending upon the action listed in the access list.
Step 4	**distribute-list** {*access-list-number* | *access-list-name*} **in** [*type-number*]	Suppress processing in routes listed in updates.
Step 5	**end**	Return to privileged EXEC mode.
Step 6	**copy running-config startup-config**	(Optional) Save your entries in the configuration file.

Use the **no distribute-list in** router configuration command to change or cancel a filter. To cancel suppression of network advertisements in updates, use the **no distribute-list out** router configuration command.

Filtering Sources of Routing Information

Because some routing information might be more accurate than others, you can use filtering to prioritize information coming from different sources. An *administrative distance* is a rating of the trustworthiness of a routing information source, such as a router or group of routers. In a large network, some routing protocols can be more reliable than others. By specifying administrative distance values, you enable the router to intelligently discriminate between sources of routing information. The router always picks the route whose routing protocol has the lowest administrative distance. Table 26-10 on page 26-47 shows the default administrative distances for various routing information sources.

Because each network has its own requirements, there are no general guidelines for assigning administrative distances.

Beginning in privileged EXEC mode, follow these steps to filter sources of routing information:

	Command	Purpose
Step 1	**configure terminal**	Enter global configuration mode.
Step 2	**router** {**rip** | **ospf** | **igrp** | **eigrp**}	Enter router configuration mode.
Step 3	**distance** *weight* {*ip-address* {*ip-address mask*}} [*ip access list*]	Define an administrative distance. *weight*—The administrative distance as an integer from 10 to 255. Used alone, *weight* specifies a default administrative distance that is used when no other specification exists for a routing information source. Routes with a distance of 255 are not installed in the routing table. (Optional) *ip access list*—An IP standard or extended access list to be applied to incoming routing updates.
Step 4	**end**	Return to privileged EXEC mode.

	Command	Purpose
Step 5	**show ip protocols**	Display the default administrative distance for a specified routing process.
Step 6	**copy running-config startup-config**	(Optional) Save your entries in the configuration file.

To remove a distance definition, use the **no distance** router configuration command.

Managing Authentication Keys

Key management is a method of controlling authentication keys used by routing protocols. Not all protocols can use key management. Authentication keys are available for EIGRP and RIP Version 2.

Before you manage authentication keys, you must enable authentication. See the appropriate protocol section to see how to enable authentication for that protocol. To manage authentication keys, define a key chain, identify the keys that belong to the key chain, and specify how long each key is valid. Each key has its own key identifier (specified with the **key** *number* key chain configuration command), which is stored locally. The combination of the key identifier and the interface associated with the message uniquely identifies the authentication algorithm and Message Digest 5 (MD5) authentication key in use.

You can configure multiple keys with life times. Only one authentication packet is sent, regardless of how many valid keys exist. The software examines the key numbers in order from lowest to highest, and uses the first valid key it encounters. The lifetimes allow for overlap during key changes. Note that the router must know these lifetimes.

Beginning in privileged EXEC mode, follow these steps to manage authentication keys:

	Command	Purpose
Step 1	**configure terminal**	Enter global configuration mode.
Step 2	**key chain** *name-of-chain*	Identify a key chain, and enter key chain configuration mode.
Step 3	**key** *number*	Identify the key number. The range is 0 to 2147483647.
Step 4	**key-string** *text*	Identify the key string. The string can contain from 1 to 80 uppercase and lowercase alphanumeric characters, but the first character cannot be a number.
Step 5	**accept-lifetime** *start-time* {**infinite** | *end-time* | **duration** *seconds*}	(Optional) Specify the time period during which the key can be received. The *start-time* and *end-time* syntax can be either *hh*:*mm*:*ss Month date year* or *hh*:*mm*:*ss date Month year*. The default is forever with the default *start-time* and the earliest acceptable date as January 1, 1993. The default *end-time* and **duration** is **infinite**.
Step 6	**send-lifetime** *start-time* {**infinite** | *end-time* | **duration** *seconds*}	(Optional) Specify the time period during which the key can be sent. The *start-time* and *end-time* syntax can be either *hh*:*mm*:*ss Month date year* or *hh*:*mm*:*ss date Month year*. The default is forever with the default *start-time* and the earliest acceptable date as January 1, 1993. The default *end-time* and **duration** is infinite.

	Command	Purpose
Step 7	**end**	Return to privileged EXEC mode.
Step 8	**show key chain**	Display authentication key information.
Step 9	**copy running-config startup-config**	(Optional) Save your entries in the configuration file.

To remove the key chain, use the **no key chain** *name-of-chain* global configuration command.

Monitoring and Maintaining the IP Network

You can remove all contents of a particular cache, table, or database. You can also display specific statistics. Use the privileged EXEC commands in Table 26-11 to clear routes or display status:

Table 26-11 Commands to Clear IP Routes or Display Route Status

Command	Purpose
clear ip route {*network* [*mask* | *]}	Clear one or more routes from the IP routing table.
show ip protocols	Display the parameters and state of the active routing protocol process.
show ip route [*address* [*mask*] [**longer-prefixes**]] | [*protocol* [*process-id*]]	Display the current state of the routing table.
show ip route summary	Display the current state of the routing table in summary form.
show ip route supernets-only	Display supernets.
show ip cache	Display the routing table used to switch IP traffic.
show route-map [*map-name*]	Display all route maps configured or only the one specified.