Power Supply Installation

This chapter describes how to install the power supply modules. The following topics are included in this chapter:

Note The contents of this chapter are not applicable to the Cisco Catalyst 3650-24PDM and Catalyst 3650-48FQM switches. These switches come with fixed power supply modules and require no separate installation.

Power Supply Module Overview

The switch operates with either one or two active power supply modules. Two power supply modules can be powered up from two different phases.

You can use two AC modules, two DC modules, one AC and one DC module, or one module and a blank cover.

Note In a Network Equipment Building System (NEBS) installation, you can use two DC modules or one DC module and a blank cover.

All the switches ship with a blank cover in the second power supply slot if switches are configured with only one power supply.

Table 4-1 describes the supported internal power supply modules.

Table 4-1 Power Supply Module Part Numbers and Descriptions

Part Number	Description
PWR-C1-1100WAC	1100-W AC power supply module
PWR-C1-715WAC	715-W AC power supply module

Table 4-1 Power Supply Module Part Numbers and Descriptions (continued)

Part Number	Description
PWR-C1-BLANK	Blank cover
PWR-C2-1025WAC	1025-W AC power supply module
PWR-C2-640WAC	640-W AC power supply module
PWR-C2-250WAC	250-W AC power supply module
PWR-C2-640WDC	640-W DC power supply module
PWR-C2-BLANK	Blank cover

The input voltages of the power supplies are as follows:

- The 250-W, 640-W, and 715-W AC power supply modules are autoranging units that support input voltages between 100 and 240 VAC.
- The 1025-W and 1100-W AC power supply modules are autoranging units that support input voltages between 115 and 240 VAC.
- The 640-W DC power supply module has dual input feeds (A and B) and support input voltages between 36 and 72 VDC. The output voltage range is 51 to 57 V.

Each AC power supply module has a power cord for connection to an AC power outlet.

- The 640-W, 715-W, 1025-W, and 1100-W and modules use a 16-AWG cord (only North America). All the other modules use an 18-AWG cord.
- The DC power supply module must be wired to a DC power source.

Note

- For information on 250-W AC power supply support on the PoE-capable switch models, see the *Cisco Catalyst 3650 Series Switches Release Notes* at http://www.cisco.com/c/en/us/support/switches/catalyst-3650-series-switches/products-release-notes-list.html.
- Only the DC power module is NEBS-compliant.

.Figure 4-1 to Figure 4-6 show the power supply modules.

Figure 4-1 1100-W AC Power Supply

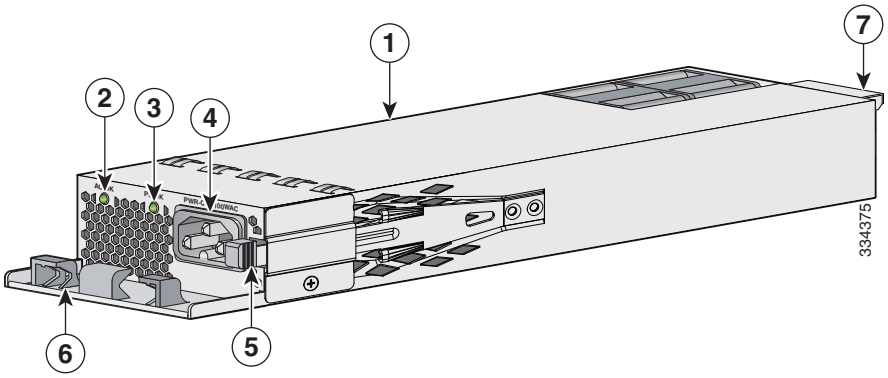

1	1100-W AC power supply module	**5**	Release latch
2	AC OK LED	**6**	Power cord retainer
3	PS OK LED	**7**	Keying feature
4	AC power cord connector		

Figure 4-2 715-W AC Power Supply Module

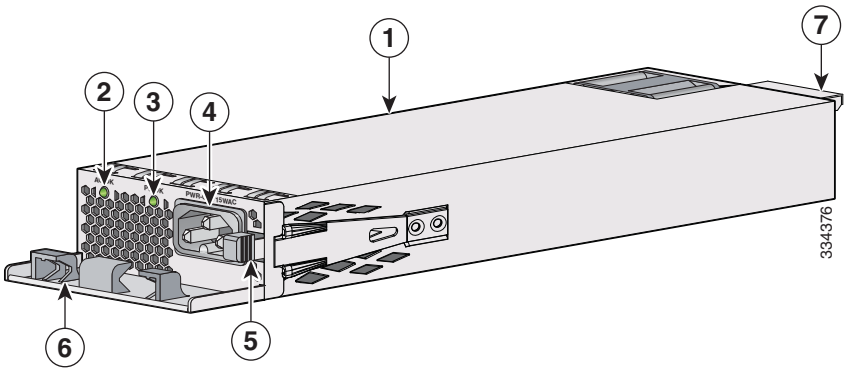

1	715-W AC power supply module	**5**	Release latch
2	AC OK LED	**6**	Power cord retainer
3	PS OK LED	**7**	Keying feature
4	AC power cord connector		

Figure 4-3 1025-W AC Power Supply

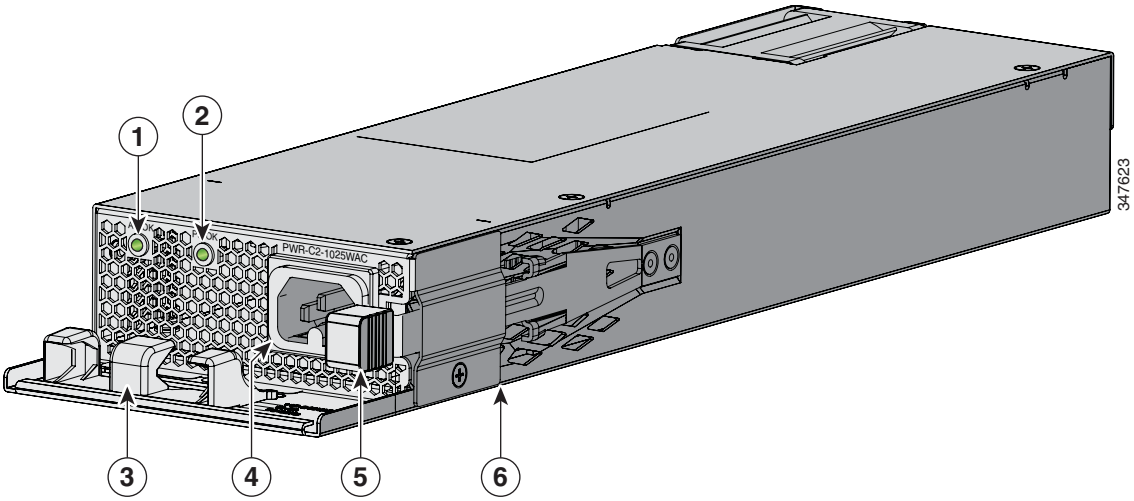

1	AC OK LED	**4**	AC power cord connector
2	PS OK LED	**5**	Release latch
3	AC power cord retainer	**6**	1025-W AC power supply module

Figure 4-4 640-W AC Power Supply Module

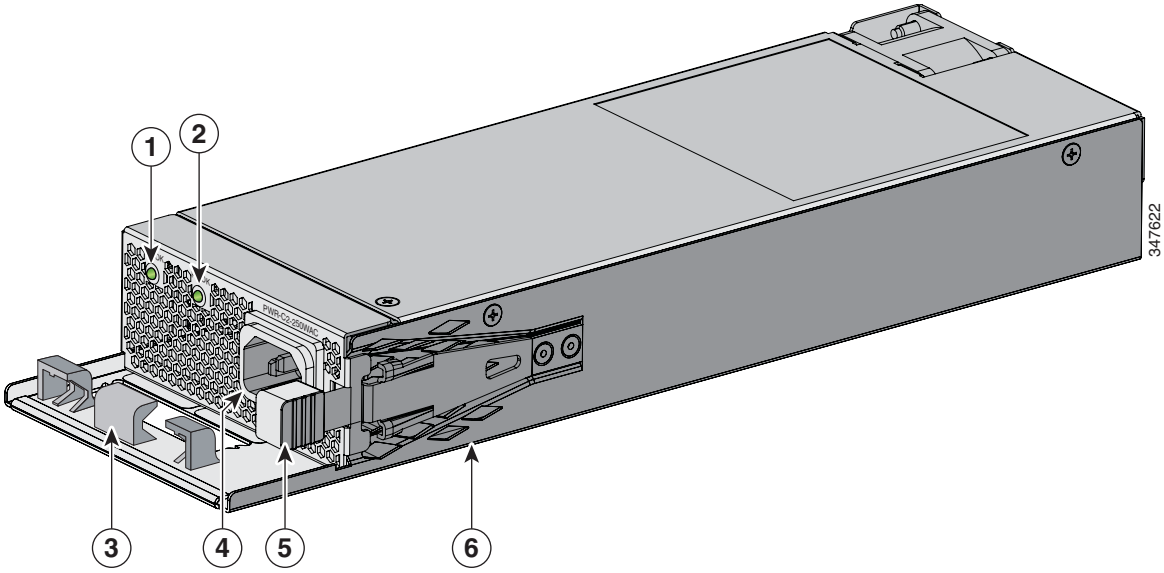

1	AC OK LED	**4**	AC power cord connector
2	PS OK LED	**5**	Release latch
3	AC power cord retainer	**6**	640-W AC power supply module

Figure 4-5 250-W AC Power Supply Module

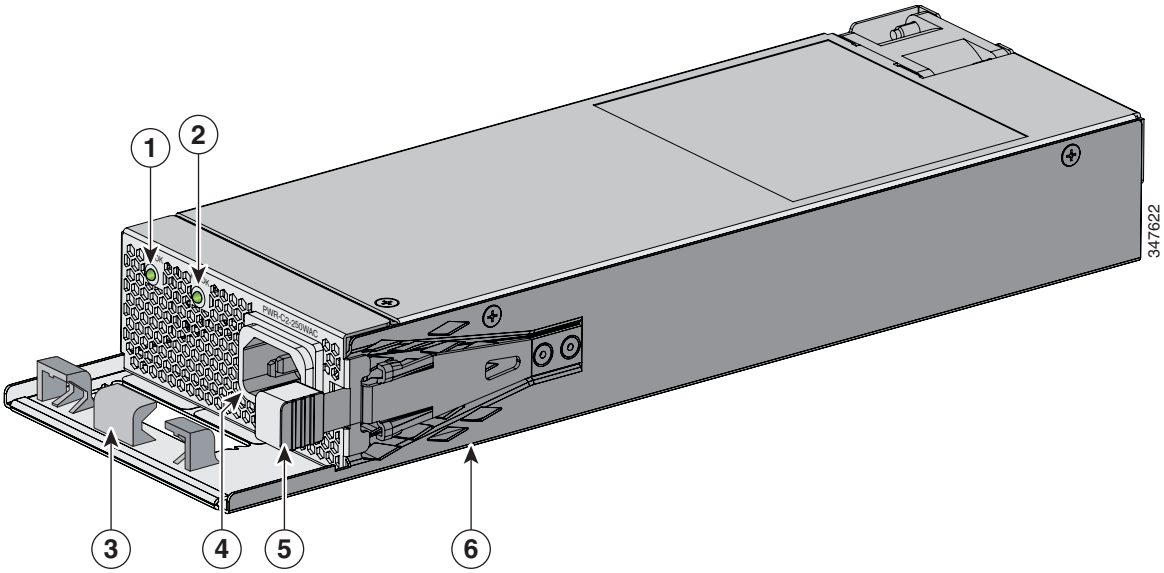

1	AC OK LED	**4**	AC power cord connector
2	PS OK LED	**5**	Release latch
3	AC power cord retainer	**6**	250-W AC power supply module

Figure 4-6 640-W DC Power Supply Module

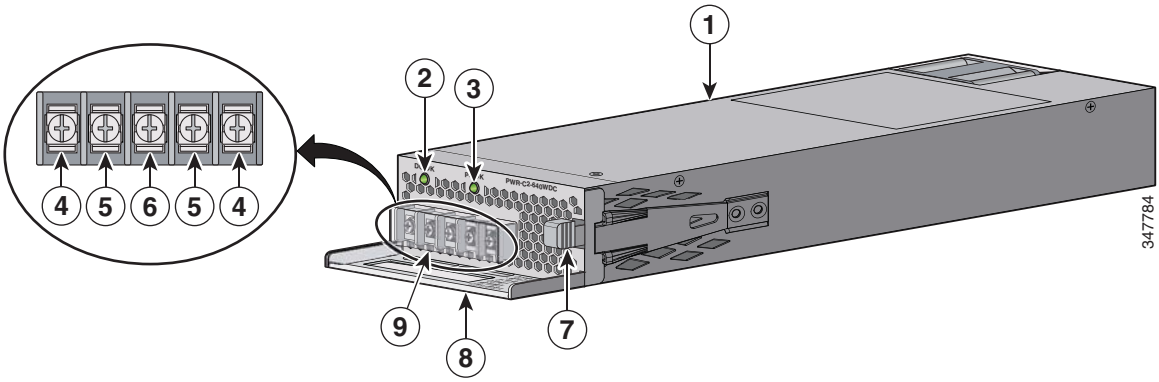

1	640-W DC power supply module	**6**	Grounding terminal
2	DC OK LED	**7**	Release latch
3	PS OK LED	**8**	Extraction handle
4	Input power terminals (positive polarity)	**9**	Terminal block safety cover
5	Input power terminals (negative polarity)		

If no power supply is installed in a power supply slot, install a power supply slot blank cover (Figure 4-7).

Figure 4-7 Power Supply Slot Blank Cover

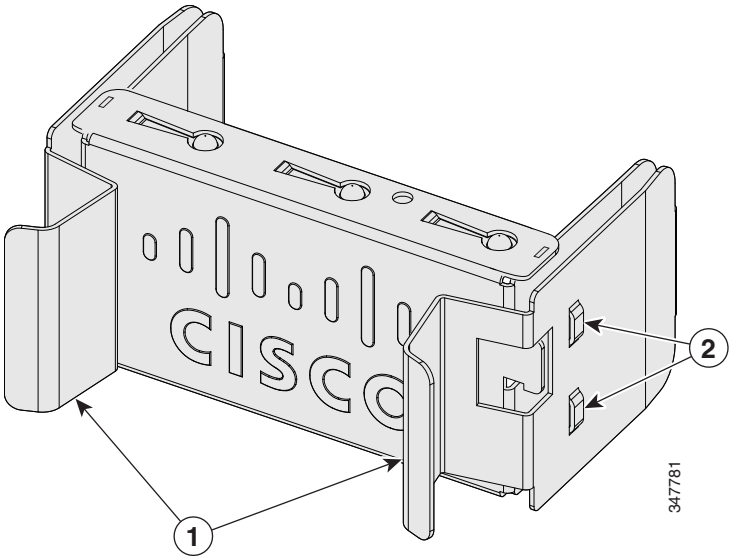

1	Release handles	**2**	Retainer clips

The power supply modules have two status LEDs:

Table 4-2 Switch Power Supply Module LEDs

AC Power Supply Module LEDs			
AC OK	**Description**	**PS OK**	**Description**
Off (AC LED is off)	No AC input power.	Off	Output is disabled, or input is outside operating range.
Green	AC input power present.	Green	Power output to switch.
		Red	Output has failed.
DC Power Supply Module LEDs			
DC OK	**Description**	**PS OK**	**Description**
Off (DC LED is off)	No DC input power.	Off	Output is disabled, or input is outside operating range.
Green	DC input power present.	Green	Power output to switch.
		Red	Output has failed.

Installation Guidelines

Table 4-1 lists the switches and the compatible power supply modules. Observe these guidelines when removing or installing a power supply or fan module:

- Do not force the power supply or fan module into a slot. This might damage the pins on the switch if they are not aligned with the module.
- A power supply that is only partially connected to the switch can disrupt the system operation.
- Remove power from the power supply module before removing or installing the module.
- The power supply is hot-swappable. In some configurations, such as full PoE+ or power-sharing mode, removing a power supply causes powered devices to shut down until the power budget matches the input power of a single power supply. To minimize network interruption, hot swap the power supply, ensuring that the remaining supply has sufficient PoE power for all powered ports.

  For information about the switch commands that display the available power budget, see the *Cisco Catalyst 3650 Series Switches Software Configuration Guides* at http://www.cisco.com/c/en/us/support/switches/catalyst-3650-series-switches/products-installation-and-configuration-guides-list.html.

Note For information on 250-W AC power supply support on the PoE-capable switch models, see the *Cisco Catalyst 3650 Series Switches Release Notes* at http://www.cisco.com/c/en/us/support/switches/catalyst-3650-series-switches/products-release-notes-list.html.

Caution Do not operate the switch with one power supply module slot empty. For effective chassis cooling, both the module slots must be populated with either a power supply or a blank cover.

Warning **Blank faceplates and cover panels serve three important functions: they prevent exposure to hazardous voltages and currents inside the chassis; they contain electromagnetic interference (EMI) that might disrupt other equipment; and they direct the flow of cooling air through the chassis. Do not operate the system unless all cards, faceplates, front covers, and rear covers are in place.** Statement 1029

Warning **Do not reach into a vacant slot or chassis while you install or remove a module. Exposed circuitry could constitute an energy hazard.** Statement 206

Warning **Only trained and qualified personnel should be allowed to install, replace, or service this equipment.** Statement 1030

Installing or Replacing an AC Power Supply

Step 1 Turn off the power at its source.

Step 2 Remove the power cord from the power cord retainer.

Step 3 Remove the power cord from the power connector.

Step 4 Press the release latch at the right side of the power supply module inward and slide the power supply out (Figure 4-8).

Caution Do not leave the power supply slot open for more than 90 seconds while the switch is operating.

Warning **This unit might have more than one power supply connection. All connections must be removed to de-energize the unit.** Statement 1028

Step 5 Insert the new power supply into the power supply slot, and gently push it into the slot (Figure 4-8). When correctly inserted, the 250-W, 640-W, and 715-W power supply modules (excluding the power cord retainer) are flush with the switch's rear panel. The 1025-W and 1100-W power supply modules extend 1.5 inches from the switch's rear panel.

Figure 4-8 Inserting the AC Power Supply in the Switch

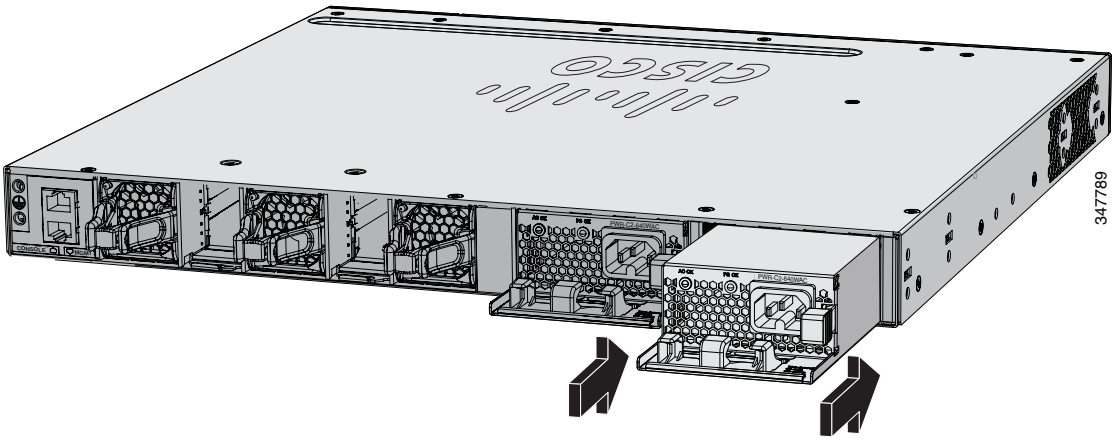

Step 6 (Optional) Make a loop in the power cord and thread it through the power cord retainer (Figure 4-9).

Figure 4-9 AC Power Supply with Power Cord Retainer

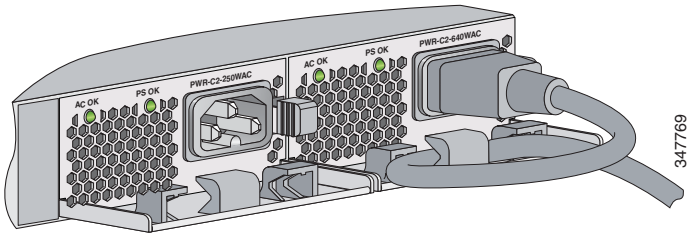

Step 7 Connect the power cord to the power supply and to an AC power outlet. Turn on the power at the power source.

Step 8 Confirm that the power supply AC OK and PS OK LEDs are green.

Installing a DC Power Supply

- Equipment That You Need, page 4-9

- Grounding the Switch, page 4-10
- Installing the DC Power Supply in the Switch, page 4-12
- Wiring the DC Input Power Source, page 4-12

Warning **An exposed wire lead from a DC-input power source can conduct harmful levels of electricity. Be sure that no exposed portion of the DC-input power source wire extends from the terminal block plug.** Statement 122

Warning **Before performing any of the following procedures, ensure that power is removed from the DC circuit.** Statement 1003

Warning **This product relies on the building's installation for short-circuit (overcurrent) protection. Ensure that the protective device is rated not greater than: 25 A.** Statement 1005

Warning **A readily accessible two-poled disconnect device must be incorporated in the fixed wiring.** Statement 1022

Warning **Hazardous voltage or energy may be present on power terminals. Always replace cover when terminals are not in service. Be sure uninsulated conductors are not accessible when cover is in place.** Statement 1086

Note The grounding architecture of this product is DC-isolated (DC-I).

Equipment That You Need

- Ratcheting torque screwdriver with a Number-2 Phillips head that exerts up to 15 pound-force inches (lbf-in.) of pressure.
- Panduit crimping tool with optional controlled-cycle mechanism (model CT-720, CT-920, CT-920CH, CT-930, or CT-940CH).
- Wire-stripping tools.
- 12-gauge copper ground wire (insulated or not insulated) for the single-hole ground connection.
- 8-gauge copper ground wire (insulated or not insulated) for the dual-hole ground connection.
- Dual-hole ground lug and two screws (included in the DC Power Supply Accessory Kit) and single-hole ground lug and screw (included in the Switch Accessory Kit). The dual-hole lug is required for the grounding of the switch in an NEBS installation where the DC supply is the only NEBS-compliant power supply option.
- Four leads of 12-gauge copper wire.
- Four fork-type terminals from the DC power supply accessory kit. The terminals must be the proper size for M3 screws in a Dinkle DT-35-B25-style terminal block.

Grounding the Switch

Follow the grounding procedures at your site and observe these warnings:

Warning **This equipment must be grounded. Never defeat the ground conductor or operate the equipment in the absence of a suitably installed ground conductor. Contact the appropriate electrical inspection authority or an electrician if you are uncertain that suitable grounding is available.** Statement 1024

Warning **When installing or replacing the unit, the ground connection must always be made first and disconnected last.** Statement 1046

Caution Follow the grounding procedure instructions, and use a UL-listed lug (included in the accessory kit).

Follow these steps to install either a single-hole ground lug or a dual-hole ground lug on the switch. Make sure that you follow grounding requirements, if any, at your site.

Step 1 Use the ground lug screw and the lug ring for a single-hole ground connection. Use the dual-hole lug for a ground connection in an NEBS installation.

Step 2 Strip the 12-gauge or 8-gauge ground wire to 0.5 inch (12.7 mm) ± 0.02 inch (0.5 mm) (Figure 4-10). Stripping more than the recommended amount of wire can leave exposed wire from the connector. Use 12-gauge copper ground wire for the single-hole ground connection. Use 8-gauge copper ground wire for the dual-hole ground connection.

Figure 4-10 Stripping the Ground Wire

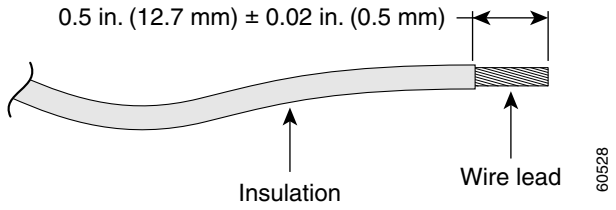

Step 3 Slide the open end of the ground lug over the exposed area of the wire.

Step 4 Using a Panduit crimping tool, crimp the ground lug to the wire (Figure 4-11).

Figure 4-11 Crimping the Ground Lug

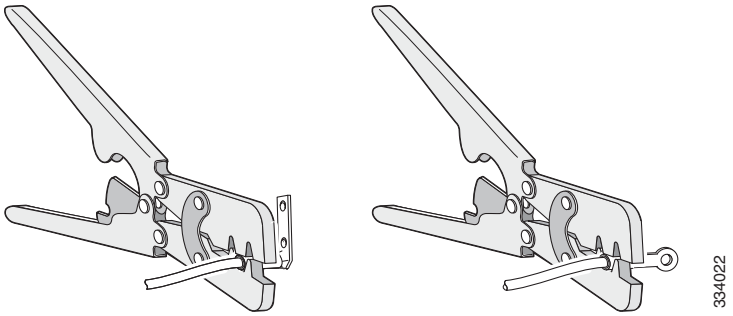

Step 5 Use the ground screw to attach the single-hole ground lug to the switch's rear panel. Use two ground screws to attach the dual-hole lug to the switch's rear panel (Figure 4-12).

Step 6 Using a ratcheting torque screwdriver, torque the ground-lug screws to 60 lbf-in. (960 ozf-in.).

Step 7 Connect the other end of the grounding wire to an appropriate grounding point at your site or to the rack.

Figure 4-12 Attaching the Ground Lug and Wire Assembly

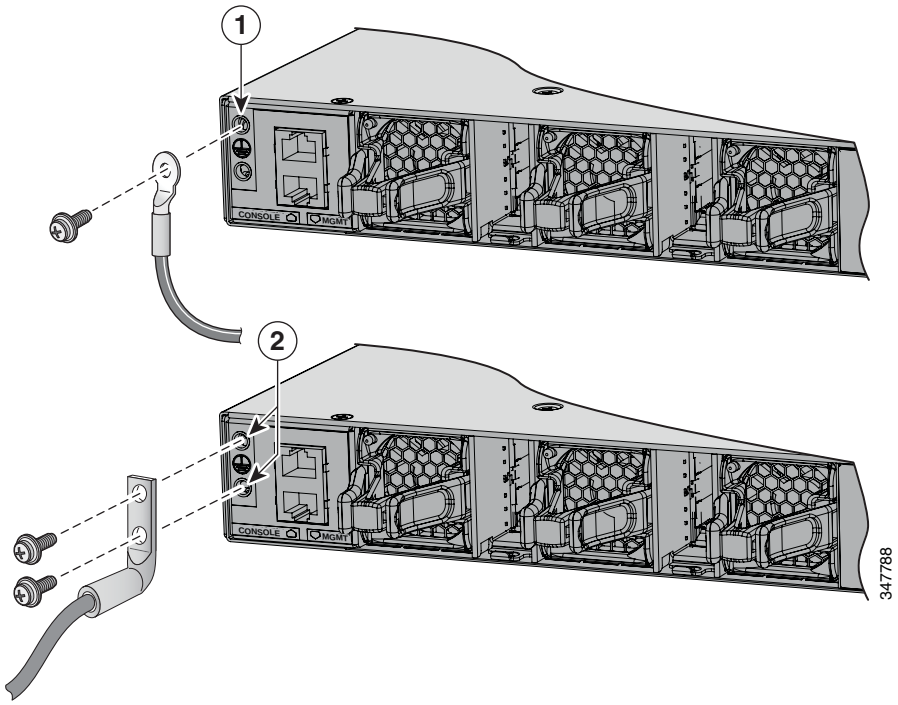

1	Single-hole ground screw and lug ring	**2**	Dual-hole ground adapter and dual-hole lug

Installing the DC Power Supply in the Switch

Before installing the power supply, see the "Installation Guidelines" section on page 4-6.

Step 1 Turn off DC power. To ensure that power is off, change the circuit breakers to the OFF position, and tape the circuit-breaker switches in the OFF position.

Step 2 Remove the plastic safety cover from the power supply terminal blocks (Figure 4-6).
If you are not replacing a DC power supply, go to Step 5.

Step 3 Use a number-2 Phillips screwdriver to remove the DC-input power wires from the power terminals.

Step 4 Press the release latch at the right side of the power supply module inward, and pull the power supply out.

Step 5 Insert the power supply in the power supply slot, and gently push it into the slot (Figure 4-13). When correctly installed, the DC power supply (excluding the extraction handle) is flush with the switch's rear panel.

Figure 4-13 Inserting the DC Power Supply in the Switch

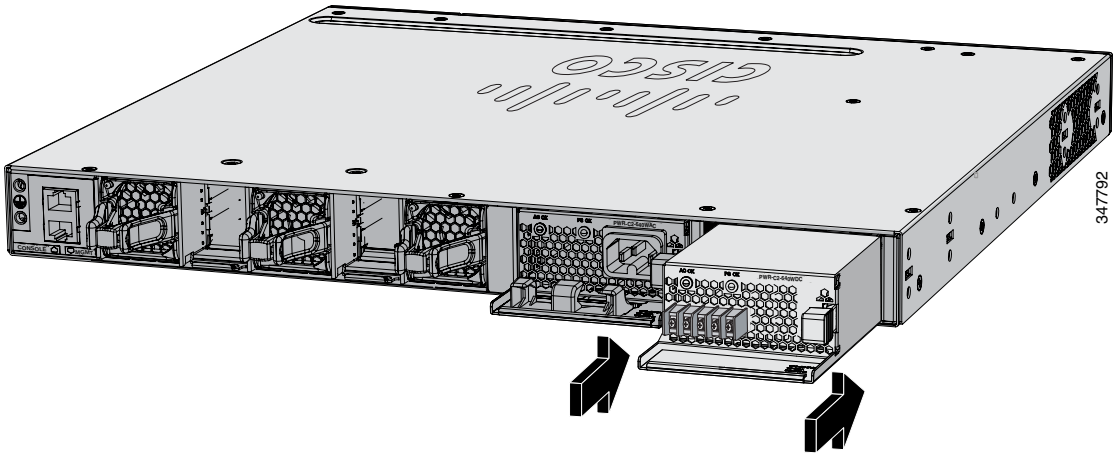

Step 6 Connect the input power, as described in the "Wiring the DC Input Power Source" section on page 4-12.

Wiring the DC Input Power Source

Step 1 Using a wire-stripping tool, strip each of the four wires from the DC-input power source to the appropriate length for the terminals.

Warning **Use copper conductors only.** Statement 1025

Step 2 Using a Panduit crimping tool, crimp the fork-type terminals to the copper conductor, 90C, 12-AWG DC power input wires.

Step 3 Connect the DC-input power terminals to the terminal blocks. See Figure 4-14 or Figure 4-15. Make sure that you match the polarity (negative to negative, positive to positive) when connecting the wires to the terminal blocks. Connect the ground wire to a grounded metal rack or to earth ground if the switch is not in a grounded rack.

Figure 4-14 DC Source A Isolated from Source B with No Common Ground

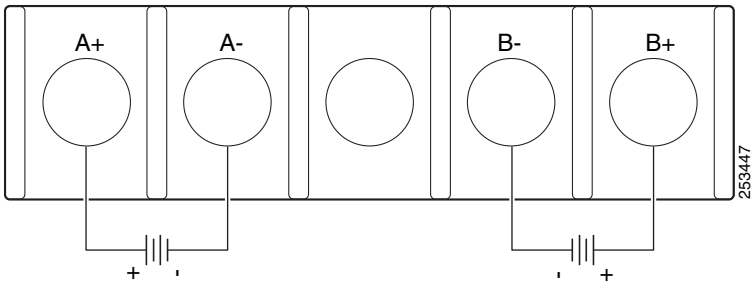

Figure 4-15 DC Source A and Source B Connections with Common Ground

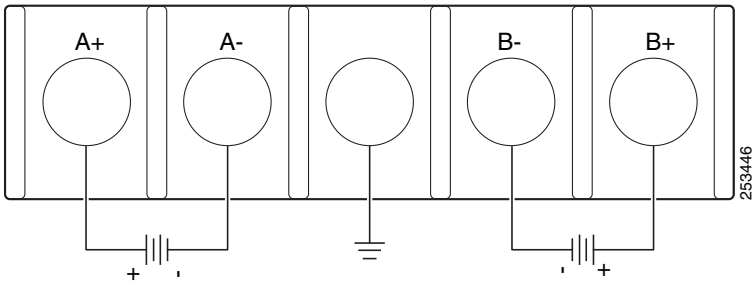

Step 4 Torque all the terminal block screws to 11 lbf-in.

Step 5 Replace the terminal block safety cover.

Step 6 Move the DC power source circuit-breakers to the ON position.

Step 7 Confirm that the power supply DC OK and PS OK LEDs are green. See Table 4-2 for a description of the module LEDs.

Finding the Power Supply Module Serial Number

If you contact Cisco Technical Assistance regarding a power supply module, you should know the serial number. See Figure 4-16 to Figure 4-20 to find the serial number.

Figure 4-16 1100-W AC Power Supply Serial Number

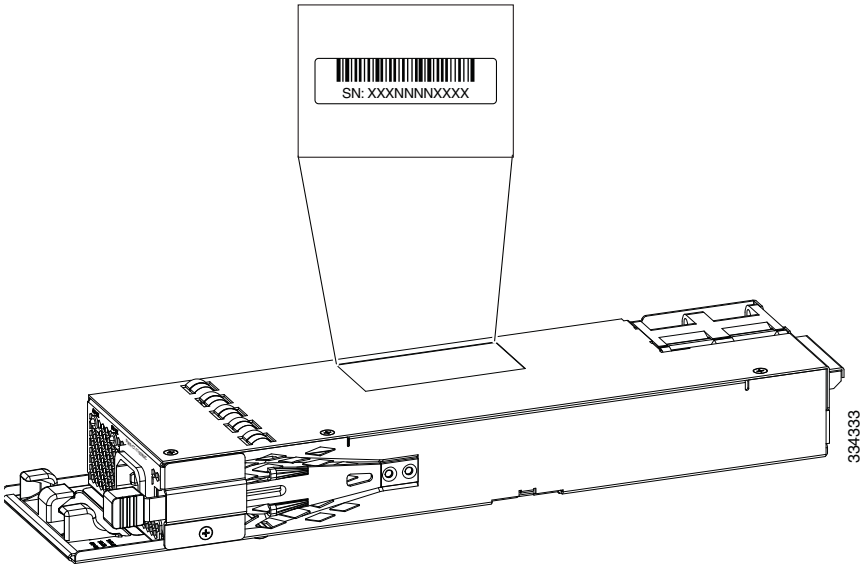

Figure 4-17 1025-W AC Power Supply Serial Number

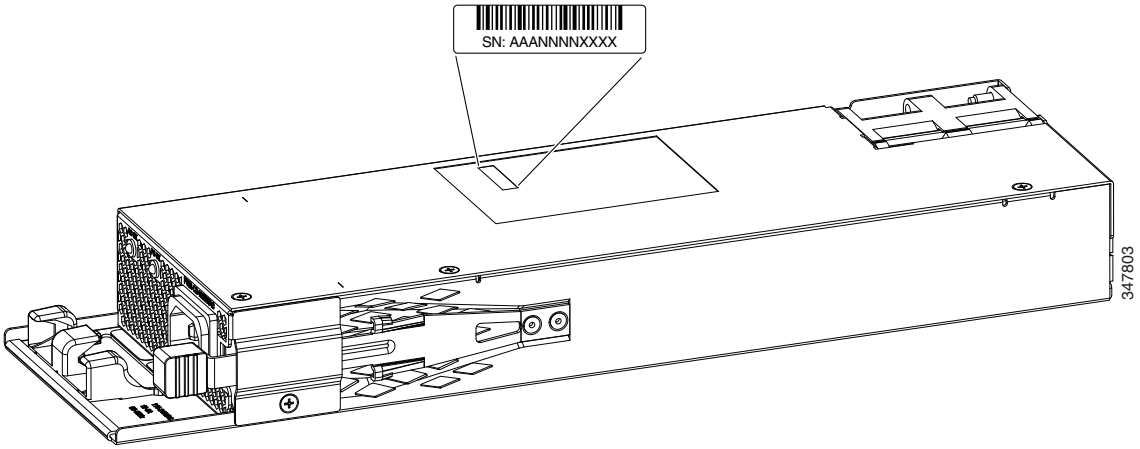

Figure 4-18 715-W AC Power Supply Serial Number

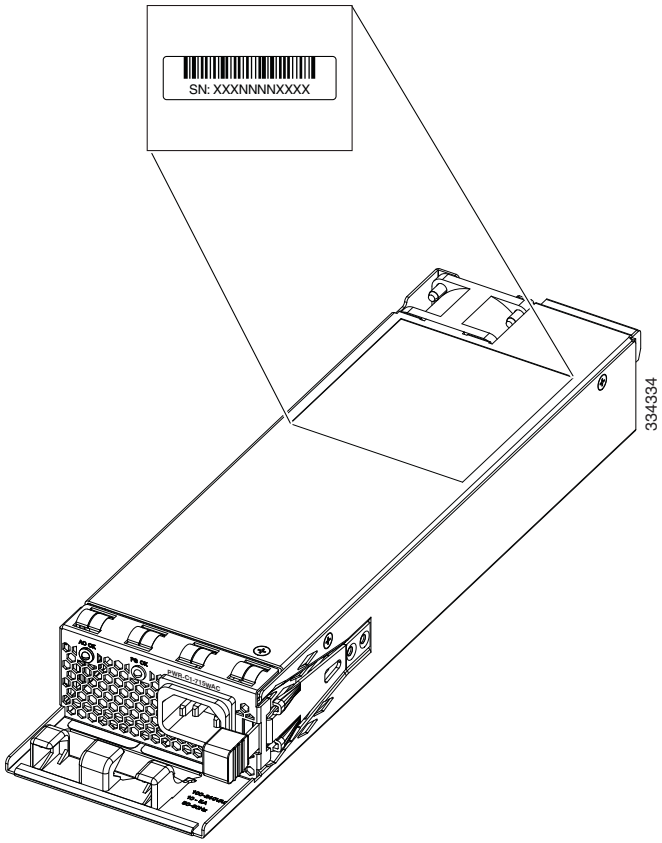

Figure 4-19 640-W and 250-W AC Power Supply Module Serial Number

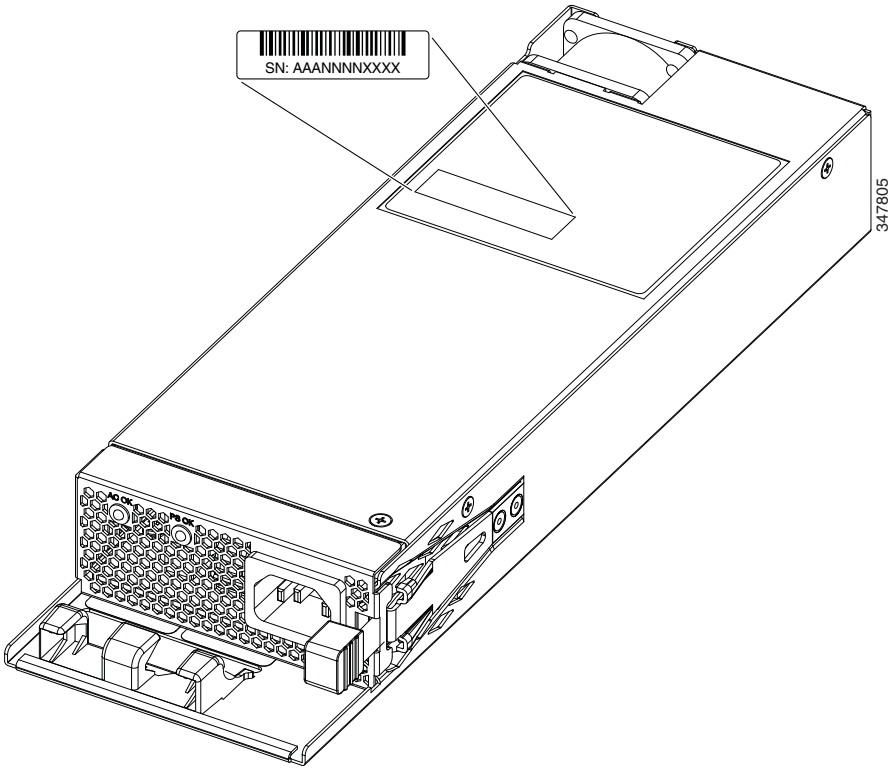

Figure 4-20 640-W DC Power Supply Module Serial Number