Cisco N9364E-SG2X-O Series Switches Hardware Installation Guide

Cisco Nexus 9364E-SG2X-O Switch
Updated November 25, 2026

Topics included

1 Overview of Cisco N9364E-SG2X-O 4

Product overview....5
Fan tray assembly....6
Power supply modules....7
LEDs....8
Chassis LEDs....8
Uplink module LEDs....8
Fan LEDs....9
Power supply LEDs....9

2 Prepare to Install....10

Safety....11
Network Equipment-Building System (NEBS) statements....15
Site requirements....19
Temperature....20
Humidity....20
Altitude....21
Dust and particulate matter....21
Minimizing electromagnetic and radio frequency interference....21
Shock and vibration....22
Prevent electrostatic discharge....22
Ground the switch....22
Plan for power requirements....23
Airflow....24
Rack and cabinet requirements....25
Clearance....25

3 Install the Switch....28

Install options with rack-mount kits....29
Install a rack....29
Unpack and inspect the switch....30
Tools and equipment 30
Accessory kit....31
Position the chassis in the rack....31
Install the chassis in a four-post rack....31
Rack-mount the chassis in a 4-post rack....32
Ground the chassis....35
Start the switch....37

4 Connect the Switch....40
Overview of network connections....41
Connect a console to the switch....41
Create the initial switch configuration....42
Set up the management interface....44
Connect interface ports to other devices....44
Maintain transceivers and optical cables....44

5 Replace Components....46
Replace a fan module....47
Replace power supply modules....48
Replace AC power supply modules....48
Install HVAC/HVDC power supply modules....49
Replace LVDC power supply modules....50
Install and remove SFP modules....52
Install and remove OSFP/QSFP transceiver modules....53
Attach optical network cables....56
Remove transceiver modules....56
Replace the coin-cell battery....57

Appendix A: Rack Specifications....62
Overview of racks....63
General requirements for cabinets and racks....63
Requirements for standard open racks....64
Requirements for perforated cabinets....64
Cable management guidelines....64

Appendix B: System Specifications....66
Environmental specifications....67
Switch dimensions....67
Switch and module weights and quantities....67
Transceiver and cable specifications....68
Switch power input requirements....68
Power specifications....68
2000W AC power supply specifications....69
3000W High Voltage AC/DC power supply specifications....69
3000W DC power supply....69
Power cable specifications....70
Power cable specifications for High Voltage AC/DC power supplies....70
HVAC power cables....71
3000W power cable specifications....71

1 Overview of Cisco N9364E-SG2X-O

Topics:

- Product overview
- Fan tray assembly
- Power supply modules
- LEDs

Provides a detailed overview the Cisco N9364E-SG2X-O series switches, and its components.

Cisco N9364E-SG2X-O series switch is a fixed box based on Graphene2_X (G200_X) network processor. The primary position of N9364E-SG2X-O switches are the Hyperscale or cloud data centers.

These switches provides 51.2T throughput and has 64 x OSFP800 ports in a 2RU form-factor.

Product overview

Provides a detailed overview of the Cisco N9364E-SG2X-O switch and its components.

The Cisco Nexus N9364E-SG2X-O switch (N9364E-SG2X-O) is a 2-rack unit (RU), fixed-port, high-density switch designed to support high-density 800G fabrics for next generation leaf and spine designs.

This switch contains Cisco Silicon One G200_X, which focuses specifically on enhanced Ethernet-based artificial intelligence/machine learning AI/ML and web-scale spine deployments. It is a 5 nm, 51.2 TeraBits per second (Tbps), 512 X 112 Gbps serializer-deserializer (SerDes) switch. This switch has these ports and capabilities:

- 64 OSFP (octal small form-factor pluggable) ports that provide high-speed interface connection to networking equipment
- 1 QSFP28 (quad small form-factor pluggable) Punt Injection Engine (PIE) port

  Only SFP-10G-LR-S and SFP-10G-SR-S optics are supported on the PIE port.
- RJ-45 management port
- RJ-45 console port
- USB 3.0 Type A port
- Two power supply modules
- Four x 80mm fans

This switch supports both Cisco NX-OS and SONiC operating systems.

Front-panel components

Figure 1: Front-panel of Cisco Nexus N9364E-SG2X-O

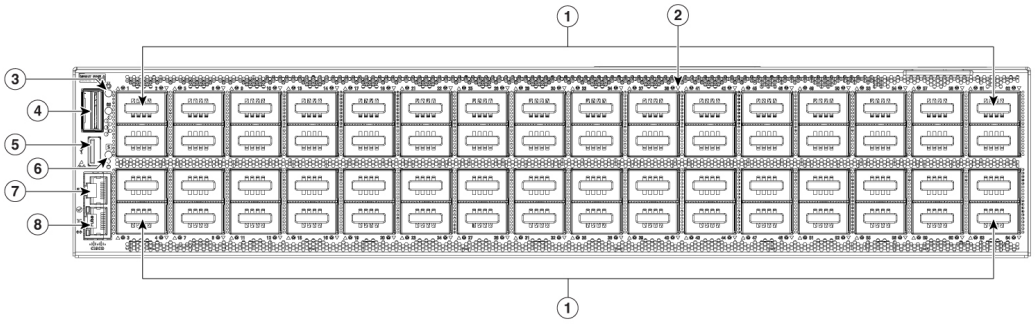

1	OSFP data ports	5	USB 3.0 Type A port
2	Port LEDs	6	Status LED
3	Blue beacon	7	RJ-45 console port
4	PIE port (QSFP28)	8	RJ-45 host port

Each OSFP port has its own bi-color (amber or green) LED that can be used to display the link status indication.

The G200_X NPU (neural processing unit) and all 64 OSFP ports connect directly to the NPU. This switch can support up to a maximum power of 32 x ZR (35W) + 32 x 15W with 5nm optics digital signal processor (DSP).

Rear-panel components

Figure 2: Rear-panel of Cisco Nexus N9364E-SG2X-O

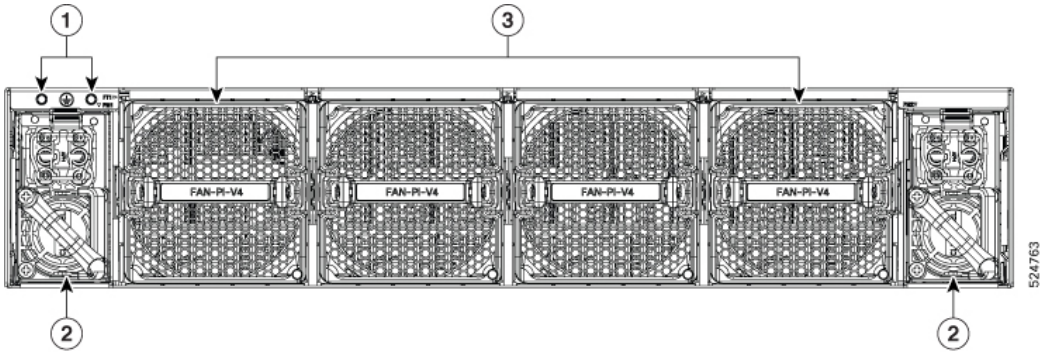

1	Ground lug location
2	Power supply (PSU-1 and PSU-2)
3	Fan Tray Four Fans: FT1, FT2, FT3, FT4

The figure shows the switch on the port side of the chassis.

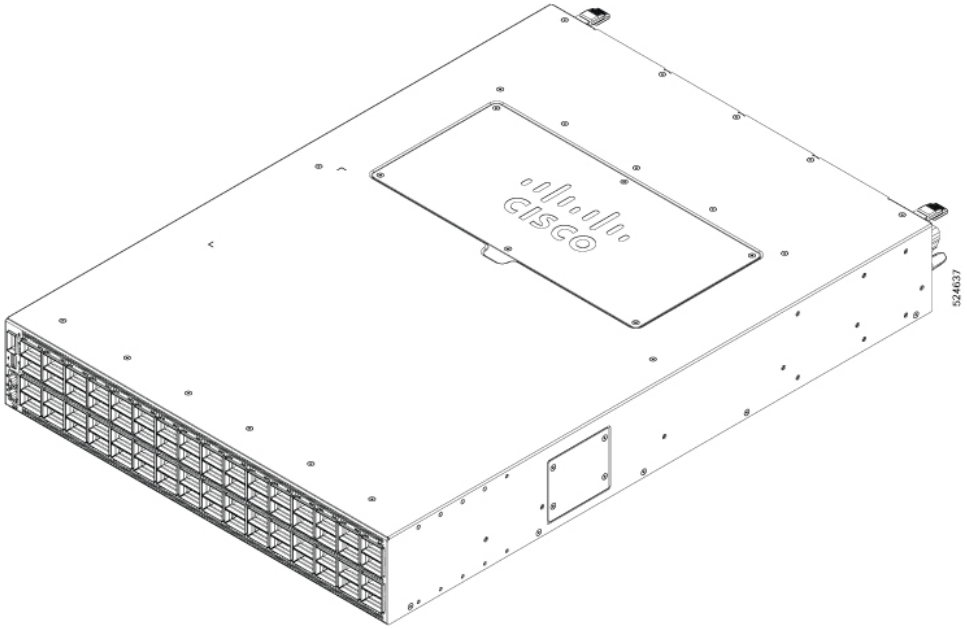

Fan tray assembly

Provides information about the fan trays at the rear of the switch.

The switch comprises of 4 x 80mm high speed smart fans. Only port-side intake airflow is supported.

- FAN-PI-V4: Port-side intake airflow with burgundy coloring

System cooling is accomplished by 4 fans in a 3+1 configuration. These fans are individually hot swappable.

The four, latched fan modules install into the chassis from the rear. Fans cool the system and maintain proper airflow through the system. The fan modules work with N+1 redundancy.

The system monitors ambient and critical component temperature and adjusts the fan speed accordingly. Each fan module has two rotors. The switch can function normally if one rotor inside any one fan module fails. If more than one rotor fails, the switch will issue a warning and power down in 2 minutes.

Note

The switch functions normally when only one fan tray fails. If more than one fan tray fails, the switch issues a warning and powers down within two minutes unless you take corrective actions to replace the failed fan trays.

Power supply modules

Provides information about the power supply modules in the rear-panel of the switch.

Two power supply modules—one for operations and one for redundancy (1+1). This switch supports both AC and DC power supply modules.

- PSU2KW-ACPI: Platinum-rated 2,000W AC with port-side intake airflow (burgundy)

  Note

  This PSU is used only in configurations with Passive Copper Cable (PCC).

- PSU3KW-HVPI: Titanium-rated 3,000W AC/HPVI with port-side intake airflow (burgundy)
- PSU3KW-DCPI-ORV3: Titanium-rated 3,100W LVDC with port-side intake airflow (burgundy)

If only one power supply is operating in an active system and a second power supply is inserted, the system fan will slow down to 50% of maximum speed for 12 seconds. It can take up to 10 seconds for the second power supply to become active. To avoid system shutdown, please do not remove the first power supply during this time-frame

The power supply modules can be either AC-to-DC or DC-to-DC types. The switch also supports high voltage AC and low voltage DC power supply modules.

The power supply modules provide 12V of primary power to the switch, with each module delivering 3,000W or 2,000W power to the switch, based on the power supply used.

> **Note**
>
> All the fan modules and power supplies must use the same airflow direction. For this switch, the air flow direction is front-to-back.

LEDs

Provides information about the front-panel LEDs.

All LEDs are available in the front-panel of the switch. You can use these LEDs to monitor switch activity and its performance.

Chassis LEDs

Lists the LEDs on the switch chassis and the status of each LED.

The BCN, STS, and ENV, LEDs are located on the left side of the front of the switch. The port LEDs appear as triangles pointing up or down to the nearest port.

LED	Color	Status
BCN	Flashing blue	The operator has activated this LED to identify this switch in the chassis.
	Off	This switch is not being identified.
STS	Green	The switch is operational.
	Flashing amber	The switch is booting up.
	Amber	The device is installed and is now initializing. There may be only one power cable connected, and the device will continue its boot sequence.
	Red	Temperature exceeds the major alarm threshold.
	Off	The switch is not receiving power.
ENV	Green	Fans and power supply modules are operational.
	Amber	At least one fan or power supply module is not operating.
(port)	Green	Port admin state is 'Enabled', SFP is present and the interface is connected (that is, cabled, and the link is up).
	Amber	Port admin state is 'Disabled, or the SFP is absent, or both.
	Off	Port admin state is 'Enabled' and SFP is present, but interface is not connected.

Uplink module LEDs

Lists the port LED status.

This section describes the port LED status. Each port has an LED.

Table 1: Port status LEDs (one per port)

LED Color	Description
Off	The port admin state is enabled, SFP is present, but the interface is not up
Amber	The port admin state is disabled, SFP is absent, or both
Green	The port admin state is enabled and the link is up

Fan LEDs

Lists the fan LED colors and status of each color.

The fan module status LED is located above the air holes on the front of the fan module. Every fan module has an LED.

Fan LED	Color	Status Description
Status	OFF	Fan tray is not receiving power
	Amber	The fan is inserted into the system and pending to come on-line
	Green	Fans are operating normally
	Flashing Amber	This fan tray has failed

Power supply LEDs

Lists the power supply colors and status.

The power supply LEDs are located on the right portion of the power supply. Combinations of states indicated by the OK and Fault LEDs signify the status for the module as shown in this table.

Color	Status
Off	Power supply is not receiving power.
Green	Power Supply ON and power being delivered to system.
Flashing green	Power supply is connected to AC power source but not outputting power to the system.
Amber	Power supply failure–possibly one of these conditions: • Over voltage • Over current • Over temperature • Fan failure
Flashing amber	Power supply is operating but a warning condition has occurred–possibly one of these conditions: • High temperature • High power • Slow fan

2 Prepare to Install

Topics:

- Safety
- Network Equipment-Building System (NEBS) statements
- Site requirements

How prepare the site to install your switch.

This module provides NEBS safety instructions that you must go through before installing the switch. It provides information about how to prevent, ESD damage, minimize EMI and RFI, avoid dust and particulate matter from getting into your switch. Rack and cabinet requirements, clearance requirements, airflow requirements are also described here.

Safety

Safety statements to follow before you install, operate, or service your switch.

Before you install, operate, or service the switch, see the Regulatory, Compliance, and Safety Information for the Cisco Nexus 9000 Series content for important safety information

Warning

Statement 1071–Warning Definition

IMPORTANT SAFETY INSTRUCTIONS

Before you work on any equipment, be aware of the hazards involved with electrical circuitry and be familiar with standard practices for preventing accidents. Read the installation instructions before using, installing, or connecting the system to the power source. Use the statement number at the beginning of each warning statement to locate its translation in the translated safety warnings for this device.

SAVE THESE INSTRUCTIONS



Note

Statement 407–Japanese Safety Instruction

You are strongly advised to read the safety instruction before using the product.

https://www.cisco.com/web/JP/techdoc/pldoc/pldoc.html

When installing the product, use the provided or designated connection cables/power cables/AC adapters.

〈製品使用における安全上の注意〉

www.cisco.com/web/JP/techdoc/index.html

接続ケーブル、電源コードセット、ACアダプタ、バッテリなどの部品は、必ず添付品または指定品をご使用ください。添付品・指定品以外をご使用になると故障や動作不良、火災の原因となります。また、電源コードセットは弊社が指定する製品以外の電気機器には使用できないためご注意ください。

Warning

Statement 1003–DC Power Disconnection

To reduce risk of electric shock or personal injury, disconnect DC power before removing or replacing components or performing upgrades.

Warning

Statement 1005—Circuit Breaker

This product relies on the building's installation for short-circuit (overcurrent) protection. To reduce risk of electric shock or fire, ensure that the protective device is rated not greater than:

- AC: 20A (North America), 16A (Europe)
- LVDC: 85A
- HVDC: 20A and 30 A (North America), 32A (Europe)

Warning

Statement 1006—Chassis Warning for Rack-Mounting and Servicing

To prevent bodily injury when mounting or servicing this unit in a rack, you must take special precautions to ensure that the system remains stable. The following guidelines are provided to ensure your safety:

- This unit should be mounted at the bottom of the rack if it is the only unit in the rack.
- When mounting this unit in a partially filled rack, load the rack from the bottom to the top with the heaviest component at the bottom of the rack.
- If the rack is provided with stabilizing devices, install the stabilizers before mounting or servicing the unit in the rack.

Warning

Statement 1017—Restricted Area

This unit is intended for installation in restricted access areas. Only skilled, instructed, or qualified personnel can access a restricted access area.

Warning

Statement 1022—Disconnect Device

To reduce the risk of electric shock and fire, a readily accessible disconnect device must be incorporated in the fixed wiring.

Warning

Statement 1024–Ground Conductor

This equipment must be grounded. To reduce the risk of electric shock, never defeat the ground conductor or operate the equipment in the absence of a suitably installed ground conductor. Contact the appropriate electrical inspection authority or an electrician if you are uncertain that suitable grounding is available.

Warning

Statement 1028–More Than One Power Supply

This unit might have more than one power supply connection. To reduce risk of electric shock, remove all connections to de-energize the unit.

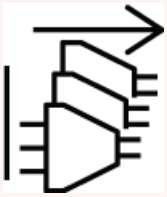

Warning

Statement 1033–Safety Extra-Low Voltage (SELV)–IEC 60950/ES1-IEC 62368 DC Power Supply

To reduce the risk of electric shock, connect the unit *only* to a DC power source that complies with the SELV requirements in the IEC 60950-based safety standards or the ES1 requirements in the IEC 62368-based safety standards.

Warning

Statement 1032–Lifting the Chassis

To prevent personal injury or damage to the chassis, never attempt to lift or tilt the chassis using the handles on modules, such as power supplies, fans, or cards. These types of handles are not designed to support the weight of the unit.

Warning

Statement 1046–Installing or Replacing the Unit

To reduce risk of electric shock, when installing or replacing the unit, the ground connection must always be made first and disconnected last.

If your unit has modules, secure them with the provided screws.

Warning

Statement 1055–Class 1/1M Laser

Invisible laser radiation is present. Do not expose to users of telescopic optics. This applies to Class 1/1M laser products.



Warning

Statement 1074–Comply with Local and National Electrical Codes

To reduce risk of electric shock or fire, installation of the equipment must comply with local and national electrical codes.

Note

Statement 1089–Instructed and Skilled Person Definitions

An instructed person is someone who has been instructed and trained by a skilled person and takes the necessary precautions when working with equipment.

A skilled person or qualified personnel is someone who has training or experience in the equipment technology and understands potential hazards when working with equipment.

Warning

Statement 1091–Installation by an Instructed Person or Skilled Person

Only an instructed person or skilled person should be allowed to install, replace, or service this equipment. See statement 1089 for the definition of an instructed person or skilled person.

Network Equipment-Building System (NEBS) statements

The NEBS guidelines to adhere to before you install your switch.

NEBS describes the environment of a typical United States Regional Bell Operating Company (RBOC) central office. NEBS is the most common set of safety, spatial, and environmental design standards applied to telecommunications equipment in the United States. It is not a legal or regulatory requirement, but rather an industry requirement.

These NEBS statements apply to the Cisco N9364E-SG2X-O switches.

Warning

Statement 1056–Unterminated Fiber Cable

Invisible laser radiation may be emitted from the end of the unterminated fiber cable or connector. Do not view directly with optical instruments. Viewing the laser output with certain optical instruments, for example, eye loupes, magnifiers, and microscopes, within a distance of 100 mm, may pose an eye hazard.

Warning

Statement 1255–Laser Compliance Statement

Pluggable optical modules comply with IEC 60825-1 Ed. 3 and 21 CFR 1040.10 and 1040.11 with or without exception for conformance with IEC 60825-1 Ed. 3 as described in Laser Notice No. 56, dated May 8, 2019.

Note

Statement 7001–ESD Mitigation

This equipment may be ESD sensitive. Always use an ESD ankle or wrist strap before handling equipment. Connect the equipment end of the ESD strap to an unfinished surface of the equipment chassis or to the ESD jack on the equipment if provided.

Warning

Statement 7003–Shielded Cable Requirements for Intrabuilding Lightning Surge. The intrabuilding port(s) of the equipment or subassembly must use shielded intrabuilding cabling/wiring that is grounded at both ends.

The following port(s) are considered intrabuilding ports on this equipment: RJ-45 Management Ethernet Port

Note

Statement 7004–Special Accessories Required to Comply with GR-1089 Emission and Immunity Requirements

To comply with the emission and immunity requirements of GR-1089, shielded cables are required for the following ports: Copper RJ-45 Ethernet Management port

Warning

Statement 7005–Intrabuilding Lightning Surge and AC Power Fault

The intrabuilding port(s) of the equipment or subassembly must not be metallically connected to interfaces that connect to the outside plant (OSP) or its wiring. These interfaces are designed for use as intrabuilding interfaces only (Type 2 or Type 4 ports as described in GR-1089-CORE) and require isolation from the exposed OSP cabling. The addition of primary protectors is not sufficient protection to connect these interfaces metallically to OSP wiring.

This statement applies to the intrabuilding ports listed below: RJ-45 Ethernet Management port

Warning

Statement 7012–Equipment Interfacing with AC Power Ports

Connect this equipment to AC mains that are provided with a surge protective device (SPD) at the service equipment that complies with NFPA 70, the National Electrical Code (NEC).

Note

Statement 7013–Equipment Grounding Systems–Common Bonding Network (CBN)

This equipment is suitable for installations using the CBN.

Note

Statement 7015–Equipment Bonding and Grounding

When you use thread-forming screws to bond equipment to its mounting metalwork, remove any paint and nonconductive coatings and clean the joining surfaces. Apply an antioxidant compound before joining the surfaces between the equipment and mounting metalwork.

Note

Statement 7016–Battery Return Conductor

Treat the battery return conductor of this equipment as DC-I.

Note

Statement 7018–System Recover Time

The equipment is designed to boot up in less than 30 minutes provided the neighboring devices are fully operational.

Note

Statement 8015–Installation Location Network Telecommunications Facilities

This equipment is suitable for installation in network telecommunications facilities.

Note

Statement 8016–Installation Location Where the National Electric Code (NEC) Applies

This equipment is suitable for installation in locations where the NEC applies.

Site requirements

How to plan a proper location to install your switch, and the environmental factors that must be taken into consideration before installing your switch.

Planning a proper location for the switch and layout of the equipment rack or wiring closet is essential for successful system operation. These sections describe some of the basic site requirements that you should be aware of as you prepare to install your switch, including the following:

- Environmental factors can adversely affect the performance and longevity of your system.
- Install the switch in an enclosed, secure area, ensuring that only qualified personnel have access to the switch and control of the environment.
- Equipment that is placed too closely together or that is inadequately ventilated may cause system over-temperature conditions, leading to premature component failure.
- Poor equipment placement can make chassis panels inaccessible and difficult to maintain.
- The switch requires a dry, clean, well-ventilated, and air-conditioned environment.
- To ensure normal operation, maintain ambient airflow. If the airflow is blocked or restricted, or if the intake air is too warm, an over-temperature condition may occur. The switch environmental monitor may then shut down the system to protect the system components.
- Multiple switches can be rack mounted with little or no clearance above and below the chassis. However, when mounting a switch in a rack with other equipment, or when placing it on the floor near other equipment, ensure that the exhaust from other equipment does not blow into the air intake vent of the switch chassis.

Temperature

Lists the operating temperature of the switch and the temperature alarms.

The operating temperature of the switch is 32 to 104 degrees Fahrenheit (0 to 40 degrees Celsius) at sea level. For every 300 meters (1000 feet) above sea level, the maximum temperature is reduced by 1 degree Celsius. The non-operating temperature of the switch is -40 to 158 degrees Fahrenheit (-40 to 70 degrees Celsius).

Overview of module temperatures

Built-in, automatic sensors in all switches in the Cisco Nexus 9000 Series monitor your switch at all times. Each module (supervisor, I/O, and fabric) has temperature sensors with two thresholds:

> **Note**
>
> For any major temperature alarms from the sensors, the switch powers down in 2 minutes. Power on the switch after fixing the temperature issue.

- Minor temperature threshold–If exceeded, a minor alarm occurs and these actions happen for all four sensors:
  - System messages display.
  - System sends Call Home alerts (if configured).
  - System sends SNMP notifications (if configured).
  - System fan speed will increment.
- Major temperature threshold–If exceeded, a major alarm occurs and these actions happen:

  If the threshold is exceeded in a switching module, only that module is shut down.

  For all sensors:
  - System messages display.
  - System sends Call Home alerts (if configured).
  - System sends SNMP notifications (if configured).
  - System fan speed will increment.
  - If the major threshold is exceeded in a switching module, only that module is shut down.
  - If the major threshold is exceeded in an active supervisor module with HA-standby or standby present, only that supervisor module is shut down and the standby supervisor module takes over.
  - If you do not have a standby supervisor module in your switch, you have 2 minutes to decrease the temperature. For Cisco N9364E-SG2X-O switches, there is no standby SUP. For any major alarms, the switch powers down in 2 minutes. During this interval, the software monitors the temperature every 5 seconds and continuously sends system messages every 10 seconds, as configured.

Humidity

Explains how to avoid moisture from entering your switch.

High humidity can cause moisture to enter the switch. Moisture can cause corrosion of internal components and degradation of properties such as electrical resistance, thermal conductivity, physical strength, and size. The switch is rated to withstand from 5- to 95-percent (nonoperating) and 5- to 95-percent (operating) relative humidity.

Climate-controlled buildings usually maintain an acceptable level of humidity for the switch equipment. If the switch is located in an unusually humid location, use a dehumidifier to maintain the humidity within an acceptable range.

This switch operates at 5- to 95-percent non-condensing relative humidity.

Altitude

Lists the operating altitude for the N9364E-SG2X-O switch.

Altitude rating is 10,000 ft (3048 m). For China, it is 6,562 ft (2000 m).

For every 1000 feet (300 meters) of elevation, the maximum ambient temperature is reduced by one degree Celsius.

Dust and particulate matter

Explains how to avoid dust and particulate matter from entering your switch.

Exhaust fans cool power supplies. System fans cool switches by drawing in air and exhausting air out through various openings in the chassis. Fans also introduce dust and other particles, causing contaminant buildup in the switch and increased internal chassis temperature. Dust and particles can act as insulators and interfere with the mechanical components in the switch. Keep a clean operating environment to reduce the negative effects of dust and other particles.

In addition to keeping your environment free of dust and particles, use these precautions to avoid contamination of your switch:

- Do not smoke near the switch.
- Do not eat or drink near the switch.

Minimizing electromagnetic and radio frequency interference

Explains how EMI and RFI affects the performance of the switch and how to minimize the interference.

Electromagnetic interference (EMI) and radio frequency interference (RFI) from the switch can adversely affect other devices, such as radio and television (TV) receivers. Radio frequencies that emanate from the switch can also interfere with cordless and low-power telephones. Conversely, RFI from high-power telephones can cause spurious characters to appear on the switch monitor.

RFI is defined as any EMI with a frequency above 10 kHz. This type of interference can travel from the switch to other devices through the power cable and power source or through the air as transmitted radio waves. The Federal Communications Commission (FCC) publishes specific regulations to limit the amount of EMI and RFI that are emitted by computing equipment. Each switch meets these FCC regulations.

To reduce the possibility of EMI and RFI, use these guidelines:

- Cover all open expansion slots with a blank filler plate.
- Always use shielded cables with metal connector shells for attaching peripherals to the switch.

When wires are run for any significant distance in an electromagnetic field, interference can occur to the signals on the wires with these implications:

- Bad wiring can result in radio interference emanating from the plant wiring.
- Strong EMI, especially when it is caused by lightning or radio transmitters, can destroy the signal drivers and receivers in the chassis and even create an electrical hazard by conducting power surges through lines into equipment.

Note

To predict and prevent strong EMI, consult experts in radio frequency interference (RFI).

The wiring is unlikely to emit radio interference if you use a twisted-pair cable with a good distribution of grounding conductors. Copper cables should not be longer than maximum distances for the media type.

Caution

If the wires exceed the recommended distances, or if wires pass between buildings, give special consideration to the effect of a lightning strike in your vicinity. The electromagnetic pulse that is caused by lightning or other high-energy phenomena can easily couple enough energy into unshielded conductors to destroy electronic switches. Consult experts in electrical surge suppression and shielding if you have had similar problems in the past.

Shock and vibration

Explains whether the switch is tested to withstand shock and vibration.

The switch has been shock- and vibration-tested for operating ranges, handling, and earthquake standards.

Prevent electrostatic discharge

Explains how to prevent switch damage due to ESD.

Many switch components can be damaged by static electricity. Not exercising the proper electrostatic discharge (ESD) precautions can result in intermittent or complete component failures. To minimize the potential for ESD damage, always use an ESD-preventive anti-static wrist strap (or ankle strap) and ensure that it makes adequate skin contact.

Note

Check the resistance value of the ESD-preventive strap periodically. The measurement should be 1–10 megohms. Before you perform any of the procedures in this guide, attach an ESD-preventive strap to your wrist and connect the leash to the chassis.

Ground the switch

Explains why and how a switch should be grounded.

The switch is sensitive to variations in voltage that is supplied by the power sources. Overvoltage, undervoltage, and transients (spikes) can erase data from memory or cause components to fail. To protect against these types of problems, ensure that there is an earth-ground connection for the switch.

Connect the grounding pad on the switch either directly to the earth-ground connection or to a fully bonded and grounded rack.

When the chassis is properly installed in a grounded rack, the switch is grounded because it has a metal-to-metal (no paint, stain, dirt, or anything else on it) contact to the rack. See Note to ensure proper conductivity between rack and switch is maintained.

Alternatively, ground the chassis by using a customer-supplied grounding cable that meets your local and national installation requirements. For U.S. installations, we recommend 6-AWG wire. Connect your grounding cable to the chassis with a grounding lug (provided in the switch accessory kit) and to the facility ground.

> **Note**
>
> Create an electrical conducting path between the product chassis and the metal surface of the enclosure, or rack in which it is mounted, or to a grounding conductor. Provide electrical continuity by using thread-forming type mounting screws that remove any paint or non-conductive coatings and establish a metal-to-metal contact. Remove any paint or other non-conductive coatings on the surfaces between the mounting hardware and the enclosure or rack. Clean the surfaces and apply an antioxidant before installation.

Plan for power requirements

Explains how to plan the power requirements for N9364E-SG2X-O.

This switch supports these power supply modules:

- PSU2KW-ACPI
- PSU3KW-HVPI
- PSU3KW-DCPI-ORV3

> **Note**
>
> For 1+1 redundancy, you must use two power sources and connect each power supply to a separate power source.

The power supplies are rated to output up to 3,000 W.

> **Note**
>
> Some of the power supply modules have rating capabilities that exceed the switch requirements. When calculating your power requirements, use the switch requirements to determine the amount of power that is required for the power supplies.

To minimize the possibility of circuit failure, verify that each power-source circuit that is used by the switch is dedicated to the switch.

Warning

Statement 1005–Circuit Breaker when using AC power supplies

This product relies on the building's installation for short-circuit (overcurrent) protection. Ensure that the protective devices are rated not greater than:

- AC: 20A (North America), 16A (Europe)
- LVDC: 85A
- HVDC: 20A and 30 A (North America), 32A (Europe)

Warning

Statement 1029–Blank Faceplates and Cover Panels

Blank faceplates and cover panels serve three important functions: they reduce the risk of electric shock and fire, they contain electromagnetic interference (EMI) that might disrupt other equipment, and they direct the flow of cooling air through the chassis. Do not operate the system unless all cards, faceplates, front covers, and rear covers are in place.

Warning

Statement 1073–No User-Serviceable Parts

There are no serviceable parts inside. To avoid risk of electric shock, do not open.

Airflow

Explains how to identify the airflow options for the switch and the supported airflow options.

The switch is positioned with its ports in either the front or the rear of the rack, depending on your cabling and maintenance requirements. To identify the airflow options for your switch, refer to the user-replaceable components in the Overview section of this document. Position the fan and power supply modules to move the coolant air from the cold aisle to the hot aisle in one of these ways:

- Port-side intake airflow–Cool air enters the chassis through the port end in the cold aisle and exhausts through the fan and power supply modules in the hot aisle.
- Single-direction airflow–The direction of the installed fan modules determines the airflow.
- For the N9364E-SG2X-O switch, port-side exhaust configuration is not supported.
- For the N9364E-SG2X-O switch, only port-side intake configuration is supported.

Identify the airflow direction of each fan and power supply module by its coloring.

- Red coloring indicates port-side intake airflow.

Note

- To prevent the switch from overheating and shutting down, position the air intake for the switch in a cold aisle. The fan and power supply modules must have the same direction of airflow.
- The airflow direction must be the same for all power supply and fan modules in the chassis. Airflow direction is front (ports) to back (fans and power supplies) of the chassis.

Rack and cabinet requirements

Explains the different types of racks and cabinets that can be used to mount your switch.

Install these types of racks or cabinets for your switch:

- Standard perforated cabinets
- Solid-walled cabinets with a roof fan tray (bottom-to-top cooling)
- Standard open four-post Telco racks

Work with your cabinet vendors to determine which of their cabinets meet these requirements or see the Cisco Technical Assistance Center (TAC) for recommendations:

- Use a standard 19-inch (48.3-cm), four-post Electronic Industries Alliance (EIA) cabinet or rack with mounting rails that conform to English universal hole spacing per section 1 of the ANSI/EIA-310-D-1992 standard.
- The depth of a four-post rack must be 24 to 32 inches (61.0 to 81.3 cm) between the front and rear mounting rails (for proper mounting of the bottom-support brackets or other mounting hardware).

Also, you must have power receptacles that are located within reach of the power cords that are used with the switch.

Clearance

Explains the clearance requirements around the switch chassis.

Provide the chassis with adequate clearance between the chassis and any other rack, device, or structure so that you can properly install the switch. Provide the chassis with adequate clearance to route cables, provide airflow, and maintain the switch.

For the clearances required for an installation of this chassis in a four-post rack, see the figure.

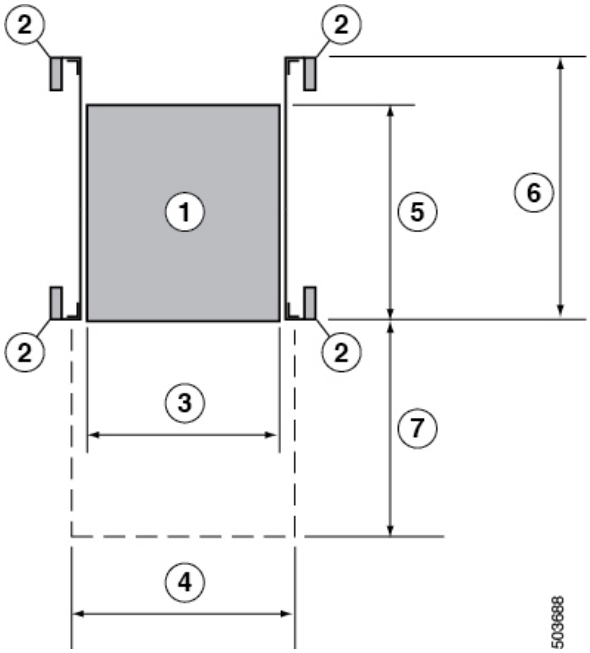

Note

Both the front and rear of the chassis must be open to both aisles for airflow.

1	Chassis	5	Depth of the chassis 24.70 inches (62.74 cm) without fan module and power supply module 26.26 inches (66.70 cm) with fan module and power supply module
2	Vertical rack-mount posts and rails	6	Maximum extension of the bottom-support rails 36.0 in (91.0 cm)
3	Chassis width 17.4 in (44.2 cm)	7	Depth of the front clearance area (equal to the depth of the chassis).
4	Width of the front clearance area (equal to the width of the chassis with two rack-mount brackets that are attached to it). 19.0 in (48.26 cm)		

Figure 3: Clearance required around the chassis

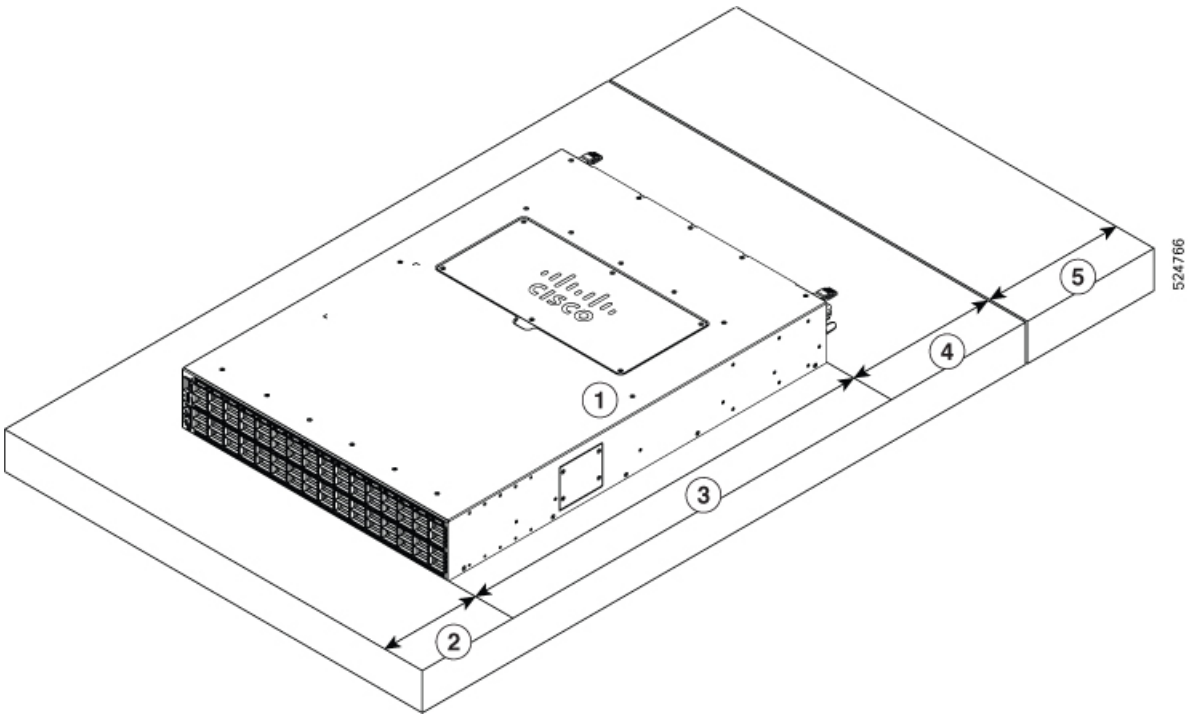

1	Chassis	4	6.0 in. (15.24 cm) rear clearance for air exhaust
2	6.0 in. (15.24 cm) front clearance for air intake	5	Additional 6.0 in. (15.24 cm) rear clearance for removal and installation of power supplies and fan modules
3	Chassis dimensions: 17.2 in. (43.94 cm) width, 26.26 in. (66.70 cm) with Fan Module and Power Supply depth, 3.43 in (8.71 cm) height		

3 Install the Switch

Topics:

- Install options with rack-mount kits
- Install a rack
- Unpack and inspect the switch
- Tools and equipment
- Accessory kit
- Position the chassis in the rack
- Install the chassis in a four-post rack
- Rack-mount the chassis in a 4-post rack
- Ground the chassis
- Start the switch

This module describes the preinstallation checklists, how to install the switch on different types of racks, grounding and starting the switch after installation.

Install options with rack-mount kits

Explains the different rack-mount kits.

The rack-mount kit enables you to install the switch into racks of varying depths. Position the switch with easy access to either the port connections or the fan and power supply modules.

Install the switch using these rack-mount options.

For four-post racks:

- 8K-2RU-KIT-S

The rack or cabinet that you use must meet the requirements listed the in General Requirements for Cabinets and Racks section.

> **Note**
>
> You are responsible for verifying that your rack and rack-mount hardware comply with the guidelines that are described in this document.

Install a rack

Step by step instructions to install a rack.

Before you install the switch, you must install a standard four-post, 19-inch EIA data center rack (or a cabinet that contains such a rack) that meets the requirements listed in Overview of Racks.

Procedure

1. Bolt the rack to the concrete subfloor before moving the chassis onto it.
2. If the rack has bonded construction, connect it to the earth ground. This action enables you to easily ground the switch and its components and to ground your electrostatic discharge (ESD) wrist strap to prevent damaging discharges when you handle ungrounded components before installing them.
3. Include one or two power sources at the rack. For AC power, provide a power receptacle.
4. Include one or two power sources at the rack. For DC power, provide a circuit breaker with terminals for connecting power cables.

   > **Note**
   >
   > If you are not using power redundancy or are using n+1 redundancy, you need only one power source. If you are using n+n redundancy, you need two power sources.

Unpack and inspect the switch

Explains how to unpack the box and verify the contents.

Before you install a new chassis, unpack and inspect it to be sure that you have all the items that you ordered. Verify that the switch was not damaged during shipment. If anything is damaged or missing, contact your customer representative immediately.

Note

When you handle the chassis or its components, follow ESD protocol at all times to prevent ESD damage. This protocol includes but is not limited to wearing an ESD wrist strap that you connect to the earth ground.

Tip

Do not discard the shipping container when you unpack the switch. Flatten the shipping cartons and store them. If you need to move or ship the system in the future, you will need this container.

Procedure

1. Compare the shipment to the equipment list that is provided by your customer service representative. Verify that you have received all of the ordered items.

   The shipment should include:

   - Switch chassis
   - Switch accessory kit

2. Check the contents of the shipping box for damage.
3. If you notice any discrepancies or damage, send this information to your customer service representative by email:
   - Invoice number of the shipper (see packing slip).
   - Model and serial number of the missing or damaged unit.
   - Description of the problem and how it affects the installation.

Tools and equipment

Lists the tools and equipment required to install the switch.

Obtain these necessary tools and equipment for installing the chassis:

- Number 1 and number 2 Phillips screwdrivers with torque capability to rack-mount the chassis.
- 3/16-inch flat-blade screwdriver.

- Tape measure and level.
- ESD wrist strap or other grounding device.
- Antistatic mat or antistatic foam.
- Crimping tool for lug.
- Wire-stripping tool.
- M4 screws to fix brackets (16).
- M4 screws to fix a ground lug (2).

Accessory kit

Lists the accessory kit for N9364E-SG2X-O.

The switch accessory kit contains the rack mount kit and the ground lug kit. The rack mount kit present in the accessory kit contains the screws and brackets required for installation.

This table contains the switch accessory kit product identifications (PIDs).

Switch	Accessory Kit	Items in Accessory Kit and Rack Depth Range
Cisco Nexus N9364E-SG2X-O	8K-2RU-KIT-S	2RU chassis rail kit

Position the chassis in the rack

Explains how to position the chassis in the rack.

The switch is designed so that you can have coolant air flow through the switch in one direction: port-side intake airflow. Enter the port side and exhaust out the power supply side (port-side intake airflow).

For port-side intake airflow, the switch must have port-side intake fan and AC power supply modules with one or more of these colorings:

- Red coloring on fan modules and AC power supplies

Plan the positioning of the switch so that its ports are located close to ports on connected devices or so that the fan and power supply modules are conveniently located in a maintenance aisle. Order the modules that move coolant air in the appropriate direction from the cold aisle to the hot aisle.

Note

All fan and power supply modules in the same switch must operate with the same direction of airflow. The air intake portion of the switch must be located in a cold aisle.

Install the chassis in a four-post rack

Lists the items in the rack-mount kit and how to install the chassis in a four-post rack.

Before you install the chassis, be sure that the rack is fully secured to the data center floor.

The table lists the items contained in the rack-mount kit.

Quantity	Part Description
1	Grounding lug and screws
2	M4 x 6 mm Phillips pan-head screws
12	M4 x 6 mm Phillips flat-head screws
19	M3 x 6 mm Phillips flat-head screws
2	Rack-mount brackets
2	Rack-mount guides
2	Rack-mount guide rails

Rack-mount the chassis in a 4-post rack

Step-by-step instructions to rack-mount the chassis in a four-post rack.

Slide the chassis onto the bottom-support rails so that the power supply end locks onto the chassis stops at the end of the rails and so that the front-mount brackets on the chassis come into contact with the front-mount rails on the rack.

Warning

Statement 1006–Chassis Warning for Rack-Mounting and Servicing

To prevent bodily injury when mounting or servicing this unit in a rack, you must take special precautions to ensure that the system remains stable. The following guidelines are provided to ensure your safety:

- This unit should be mounted at the bottom of the rack if it is the only unit in the rack.
- When mounting this unit in a partially filled rack, load the rack from the bottom to the top with the heaviest component at the bottom of the rack.
- If the rack is provided with stabilizing devices, install the stabilizers before mounting or servicing the unit in the rack.

Warning

Statement 1032–Lifting the Chassis

To prevent personal injury or damage to the chassis, never attempt to lift or tilt the chassis using the handles on modules, such as power supplies, fans, or cards. These types of handles are not designed to support the weight of the unit.

Warning

Statement 1074–Comply with Local and National Electrical Codes

To reduce risk of electric shock or fire, installation of the equipment must comply with local and national electrical codes.

Procedure

1. Install the rack-mount brackets to the switch.
   a. Determine which end of the chassis is to be located in the cold aisle.

      If the switch has port-side intake modules (fan modules and power modules with burgundy coloring), position the switch so that the ports are in the cold aisle.

   b. Position a rack-mount bracket on the side of the chassis with its four holes that are aligned to four of the screw holes on the side of the chassis. Use four M4 flat-head screws with 13.25 in lbs (1.5 N m) torque value to attach the bracket to the chassis.

Note

Align four holes in the rack-mount bracket to four screw holes on the front side of chassis or four screw holes on the rear side of the chassis. The holes that you use depend on which end of your chassis is located in the cold aisle.

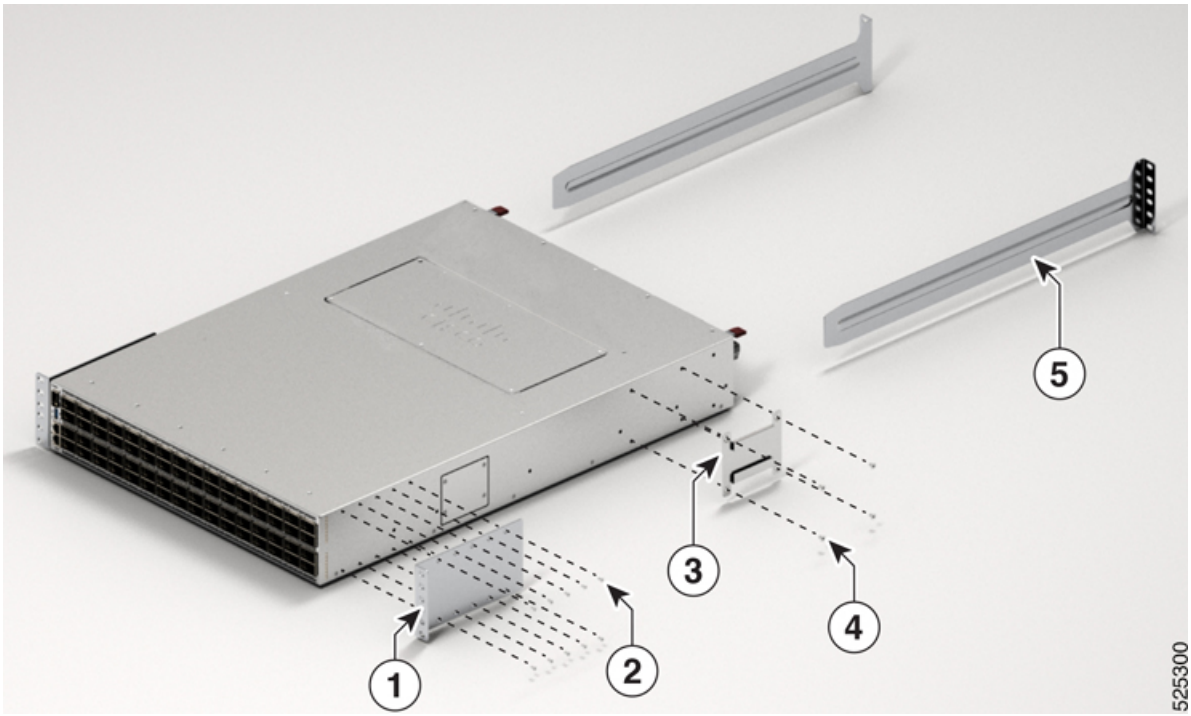

1	Rack-mount brackets	4	M3 x 6 mm Phillips flat-head screw
2	M4 x 6 mm Phillips flat-head screw	5	Rack-mount guide rails
3	Rack-mount guide		

c. Repeat Step 1b with the other rack-mount bracket on the other side of the switch.

2. Install the two rack-mount guides on the chassis.

a. Position a rack-mount guides on the side of the chassis with its two holes aligned to the two screw holes on the side of the chassis, and use two M4 flat-head screws to attach the guides to the chassis. Tighten the screws to a torque of 13.25 in-lb (1.5 N m).

b. Repeat with the other rack-mount guides on the other side of the switch.

3. Install the guide rails to the rack.

a. Position the guide rails at the desired levels on the back side of the rack. Use four 12-24 screws or four 10-32 screws, depending on the rack thread type, to attach the rails to the rack.

> **Note**
>
> For racks with square holes, you may need to position a 12-24 or 10-32 cage nut behind each mounting hole in a guide rail before using a 12-24 or 10-32 screw.

b. Repeat with the other guide rail on the other side of the rack.

c. Use a tape measure and level to verify that the rails are at the same height and horizontal.

Insert the switch into the rack and attach.

a. Use both hands to position the back of the switch between the front posts of the rack.

b. Align the two rack-mount guides on either side of the switch with the guide rails installed in the rack. Slide the rack-mount guides onto the guide rails. Gently slide the switch all the way into the rack.

> **Note**
>
> If the switch does not slide easily, try realigning the rack-mount guides on the guide rails.

c. Holding the chassis level, insert two screws (12-24 or 10-32, depending on the rack type) through the holes in each of the rack-mount brackets and into the cage nuts or threaded holes in the rack-mounting rail.

d. Tighten the 10-32 screws to 20 in-lb (2.26 N m) or tighten the 12-24 screws to 30 in-lb (3.39 N m).

4.

Ground the chassis

Step-by-step instructions to ground the chassis.

The switch chassis is automatically grounded when you properly install the switch in a grounded rack with metal-to-metal connections between the switch and rack.

> **Note**
>
> Provide an electrical conducting path between the product chassis and the metal surface of the enclosure or rack in which it is mounted or to a grounding conductor. To ensure electrical continuity, use thread-forming type mounting screws that remove any paint or non-conductive coatings and establish a metal-to-metal contact. Remove any paint or other non-conductive coatings on the surfaces between the mounting hardware and the enclosure or rack. Clean the surfaces and apply an antioxidant before installation.

If using AC or HVDC power supplies, the power cord for the AC power supplies provides grounding for the chassis. For supplemental grounding or bonding, attach a customer-supplied grounding cable to the chassis ground pad. If using LVDC power supplies, ground the rack.

Ground the chassis, if you are using a 2-post rack, attach a customer-supplied grounding cable. Attach the cable to the chassis grounding pad and the facility ground. If you are using a 4-post rack, ensure that your chassis is grounded through the rack mount system or the power cable (AC or HVDC).

Warning

Statement 1024–Ground Conductor

This equipment must be grounded. To reduce the risk of electric shock, never defeat the ground conductor or operate the equipment in the absence of a suitably installed ground conductor. Contact the appropriate electrical inspection authority or an electrician if you are uncertain that suitable grounding is available.

Warning

Statement 1046–Installing or Replacing the Unit

To reduce risk of electric shock, when installing or replacing the unit, the ground connection must always be made first and disconnected last.

If your unit has modules, secure them with the provided screws.

Before you begin

Before you can ground the chassis, verify the earth ground contact has a solid connection to the data center building.

Procedure

1. Use a wire-stripping tool to remove approximately 0.75 inch (19 mm) of the covering from the end of the grounding wire. We recommend 6-AWG wire for the U.S. installations.
2. Insert the stripped end of the grounding wire into the open end of the grounding lug. Use a crimping tool to crimp the lug to the wire. See the figure. Verify that the ground wire is securely attached to the grounding lug by attempting to pull the wire out of the crimped lug (tug test).

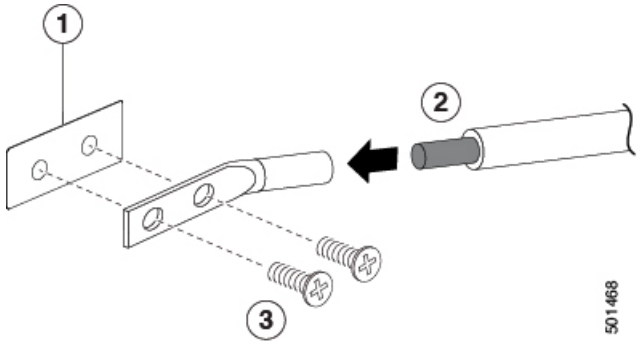

1	Chassis grounding pad	3	2 M4 screws are used to secure the grounding lug to the chassis
2	Grounding cable, with 0.75 in. (19 mm) of insulation that is stripped from one end, which is inserted into the grounding lug and crimped in place		

3. Secure the grounding lug to the chassis grounding pad with two M4 screws, see figure 1. Tighten the screws to 11 to 15 in-lb (1.24 to 1.69 N m) of torque.
4. Prepare the other end of the grounding wire and connect it to the facility ground.

Start the switch

Step-by-step instructions to start the switch after installing it in a rack.

Start the switch by connecting it to its dedicated power source. If you need n+n redundancy, connect each power supply in a switch to a different power source.

Note

This equipment is designed to boot up in less than 30 minutes, dependent on its neighboring devices being fully up and running.

Table 2: Electrical ratings

Power supply unit PIDs	Input voltage	Input current (maximum)	Input frequency	Output power
PSU2KW-ACPI	100V to 127V AC 200V to 240V AC	12A	50 to 60Hz	1000W (at 100V to 127V) 2000W (at 200-240V)
PSU3KW-HVPI	100V to 120V AC 200V to 277V AC	16A	50 to 60Hz	1500W (at 100V to 120V)
	240V to 380 V DC	14A		3000W (at 200V to 277V AC and 240V to 380V DC)
PSU3KW-DCPI-ORV3	45V to 54.5V, typical 48V	85A	-	3100W 12VDC; 258.3A maximum, 12 VDC VSB, 3.0 A maximum

Note

When all 64 OSFP ports are in use, 1+1 redundancy requires 200 to 277 V AC input. The 100 to 120 V AC input does not support 1+1 redundancy under this condition.

Before you begin

- The switch must be installed and secured to a rack or cabinet.
- The switch must be adequately grounded.

- The rack must be close enough to the dedicated power source so that you can connect the switch to the power source by using the designated power cables.
- You have the designated power cables for the power supplies that you are connecting to the dedicated power sources.

> **Note**
>
> Depending on the outlet receptacle on your AC power distribution unit, you might need an optional jumper power cord to connect the switch to your outlet receptacle.

- The switch is not connected to the network (this includes any management or interface connections).
- The fan and power supply modules are fully secured in their chassis slots.

Procedure

1. For the AC power supply, do this:
   a. Using the recommended AC power cable for your country or region, connect one end to the AC power supply.
   b. Connect the other end of the power cable to the AC power source.
2. Verify that the power supply LED is on and green.

> **Note**
>
> When one PSU is connected, the STATUS LED color is amber. With two PSUs connected, the STATUS LED color is green.

3. Listen for the fans; they should begin operating when the power supply is powered.
4. After the switch boots, verify that these LEDs are lit.
   - On the fan modules, the Status (STA or STS) LED is green.

     If a fan module Status LED is not green, try reinstalling the fan module.
   - After initialization, the switch chassis Status (labeled as STA or STS) LED is green.
5. Verify that the system software has booted and the switch has initialized without error messages.

   A setup utility automatically launches the first time that you access the switch and guides you through the basic configuration. For instructions on how to configure the switch and check module connectivity, see the appropriate Cisco Nexus 9000 Series Configuration Guides.

4 Connect the Switch

Topics:

- Overview of network connections
- Connect a console to the switch
- Create the initial switch configuration
- Set up the management interface
- Connect interface ports to other devices
- Maintain transceivers and optical cables

Describes the different types of network connections, how to connect to switch to the network, create an initial configuration for the switch, set up the management interface, and connect interface ports to other devices.

Overview of network connections

Describes the different types of network connections.

After you install the switch in a rack and power it up, make these network connections:

- Console connection–This is a direct local management connection that you use to initially configure the switch. Make this connection first to initially configure the switch and determine its IP address, which is needed for the other connections.
- Management connection–After you complete the initial configuration using a console, make this connection to manage all future switch configurations.
- Uplink and downlink interface connections–These are connections to hosts and servers in the network.

Each of these connection types is explained in one of these sections.

Note

When running cables in overhead or subfloor cable trays, we strongly recommend that you locate power cables and other potential noise sources as far away as practical from network cabling that terminates on Cisco equipment. In situations where long parallel cable runs cannot be separated by at least 3.3 feet (1 meter), we recommend that you shield any potential noise sources by housing them in a grounded metallic conduit.

Note

When using SFP+ or SFP transceivers in a QSFP+ or QSFP28 uplink port, install a QSFP-to-SFP adapter, such as the CVR-QSFP-SFP10G adapter, in the QSFP port and then install the SFP+ or SFP transceiver. The switch automatically sets the port speed to the speed of the installed transceiver.

Connect a console to the switch

Step-by-step instructions to connect a console to the switch.

Before you create a network management connection for the switch or connect the switch to the network, create a local management connection through a console terminal. Then configure an IP address for the switch. Use the console to perform these functions, each of which can be performed through the management interface after you make that connection.

- Configure the switch using the command-line interface (CLI).
- Monitor network statistics and errors.
- Configure Simple Network Management Protocol (SNMP) agent parameters.
- Download software updates.

Make this local management connection between the asynchronous serial port on a supervisor module and a console device capable of asynchronous transmission. Typically, you use a computer terminal as the console device. On the supervisor modules, use the console serial port.

> **Note**
>
> Before you can connect the console port to a computer terminal, make sure that the computer terminal supports VT100 terminal emulation. The terminal emulation software makes communication between the switch and the computer possible during setup and configuration.

Before you begin

- The switch must be fully installed in its rack, connected to a power source, and grounded.
- The necessary cabling for the console, management, and network connections must be available.
  - An RJ-45 rollover cable provided in the switch accessory kit.
  - Network cabling is routed to the location of the installed switch.

Procedure

1. Configure the console device to match these default port characteristics:
   - 115200 baud
   - 8 data bits
   - 1 stop bit
   - No parity
2. Connect an RJ-45 rollover cable to the console port on the switch.

   Find this cable in the accessory kit.
3. Route the RJ-45 rollover cable to the console or a modem.
4. Connect the other end of the RJ-45 rollover cable to the console or to a modem.

Create the initial switch configuration

Step-by-step instructions to create an initial configuration for your switch.

- A console device must be connected with the switch.
- The switch must be connected to a power source.
- Determine the IP address and the netmask that is needed for the Management (Mgmt0) interface.

Procedure

1. Power up the switch by connecting each installed power supply to an AC circuit.

   If you are using the input-source (n+n) power mode, connect half of the power supplies to one AC circuit. Connect the other half of the power supplies to another AC circuit.

The input and output LEDs on each power supply light up (green) when the power supply units are sending power to the switch. The software asks you to specify a password to use with the switch.

2. Enter a new password for this switch

   The software checks the security strength of your password. It rejects your password if it does not meet these guidelines:

   - At least eight characters.
   - Minimizes or avoids the use of consecutive characters (such as "abcd").
   - Minimizes or avoids repeating characters (such as "aaabbb").
   - Does not contain recognizable words from the dictionary.
   - Does not contain proper names.
   - Contains both uppercase and lowercase characters.
   - Contains numbers and letters.

   Examples of strong passwords are:

   - If2CoM18
   - 2004AsdfLkj30
   - Cb1955S21

   Note

   Clear text passwords cannot include the dollar sign ($) special character.

   Tip

   If a password is trivial (such as a short, easy-to-decipher password), the software will reject your password configuration. Configure a strong password as explained in this step. Passwords are case-sensitive.

   When you enter a strong password, the software asks you to confirm the password.

3. Enter the same password again.

   If you enter the same password, the software accepts the password and begins asking a series of configuration questions.

4. Until you are asked for an IP address, enter the default configuration for each question.

   Repeat this step for each question until you are asked for the Mgmt0 IPv4 address.

5. Enter the IP address for the management interface.

   The software asks for the Mgmt0 IPv4 netmask.

6. Enter a network mask for the management interface.

The software asks if you need to edit the configuration.

7. Enter no, to not edit the configuration.

   The software asks if you need to save the configuration.

8. Enter yes to save the configuration.

Set up the management interface

Steps that explains how to set up the management interface on your switch.

The switch must be powered on.

Procedure

1. Connect the management cable into the management port on the switch. For shorter connections, you can use a cable with RJ-45 connectors.
2. Connect the other end of the cable to a 10/100/1000 Ethernet port on a network device.

Connect interface ports to other devices

Explains how to connect the switch interface ports to other devices.

After you perform the initial configuration for the switch and create a management connection, you are ready to connect the interface ports on the switch to other devices. Depending on the types of interface ports on the switch, use interface cables with QSFP28, QSFP+, SFP+, SFP transceivers, or RJ-45 connectors to connect the switch to other devices.

> **Note**
>
> When using SFP+ or SFP transceivers in a QSFP+ or QSFP28 uplink port, install a QSFP-to-SFP adapter, such as the CVR-QSFP-SFP10G adapter, in the QSFP port and then install the SFP+ or SFP transceiver. The switch automatically sets the port speed to the speed of the installed transceiver.

If the transceivers that you are using can be separated from their optical cables, install the transceivers without their cables before inserting the cables into the transceivers. This helps to prolong the life of both the transceiver and cables. When removing transceivers from the switch, remove the optical cable first and then remove the transceiver.

To determine which transceivers, adapters, and cables are supported by this switch, refer to the Cisco Transceiver Modules Compatibility document.

Maintain transceivers and optical cables

Maintenance guidelines for transceivers and optical cables.

Keep transceivers and fiber-optic cables clean and dust free to maintain high signal accuracy and prevent damage to the connectors. Contamination increases attenuation (loss of light) and should be below 0.35 dB.

Consider these maintenance guidelines:

- Transceivers are static sensitive. To prevent ESD damage, wear an ESD-preventative wrist strap that is connected to the grounded chassis.
- Do not remove and insert a transceiver more often than is necessary. Repeated removals and insertions can shorten its useful life.
- Keep all optical connections covered when not in use. Clean them before using to prevent dust from scratching the fiber-optic cable ends.
- Do not touch the ends of connectors. Touching the ends can leave fingerprints and cause other contamination.
- Clean the connectors regularly; the required frequency of cleaning depends upon the environment. In addition, clean connectors if they are exposed to dust or accidentally touched. Both wet and dry cleaning techniques can be effective; refer to the fiber-optic connection cleaning procedures for your site.
- Inspect routinely for dust and damage. If you suspect damage, clean and then inspect fiber ends under a microscope to determine if damage has occurred.

Note

When you need to remove a fiber-optic transceiver, first remove the fiber-optic cable from the transceiver before you remove the transceiver from the port.

5 Replace Components

Topics:

- Replace a fan module
- Replace power supply modules
- Install and remove SFP modules
- Install and remove OSFP/QSFP transceiver modules
- Attach optical network cables
- Remove transceiver modules
- Replace the coin-cell battery

Explains how to remove and reinsert fans, power supply modules, SFPs, OSPFs/QSPFs, and attach network cables.

Replace a fan module

How to replace a fan module during operations.

Use these steps to replace the missing fan module within two minutes to avoid a shutdown.

All fan and power supply modules must have the same airflow direction or else an error can occur with the switch overheating and shutting down. You can determine the airflow direction of a fan module by the color of the stripe on the front of the module. If the fan module has a red stripe for port-side intake airflow, the power supplies must have red coloring for the same airflow direction. To avoid over heating the switch, make sure that the fan modules are positioned this way:

- For port-side intake airflow with red coloring, position the ports in a cold aisle.

Before you begin

Before you can replace a fan module, ensure that these conditions exist:

- There are four functioning fan modules in the other fan slots. To replace a fan module during operations, there must be three fan modules circulating air in the chassis at all times. The other fan module is redundant and can be replaced.
- The replacement fan module must have the same airflow direction as the other modules in the chassis.

If you must replace the fan module during operations and the above conditions are not met, leave the fan module that you need to replace in the chassis to preserve the designed airflow until you have the required module.

Procedure

1. Remove the replacement fan module from its packing materials and place it on an antistatic surface.

   Hold the module by its handle and do not touch the electrical connectors on its backside. Also, to protect the electrical connectors, avoid letting them come in contact with anything other than the electrical connectors inside the chassis.

2. Verify that you have the right fan module for the chassis. The correct fan module has one of these part numbers:
   - FAN-PI-V4 (port-side intake airflow direction and a red stripe)

   > **Note**
   >
   > Be sure that the airflow direction of the new fan module matches the airflow direction of the other fan and AC power supply modules already installed in the chassis. Port-side intake airflow is indicated with red coloring. Power supplies with dual-direction airflow (airflow direction is set by the fan modules) have white coloring.

3. Position the fan module in front of the open fan slot (be sure that the backside of the module with the electrical connectors is positioned to enter the slot first) and slide the module all the way into the chassis until its front side comes in contact with the chassis. For the last 0.2 inches (0.5 cm), carefully mount the module onto the chassis connectors by pushing more firmly, but do not force the module if it does not move further (excessive force can damage the connectors).

> **Note**
>
> If you are not able to push the module all the way into the slot, carefully slide the module out of the slot and check its electrical connectors for damage. If damaged, contact Cisco Technical Assistance for help. If undamaged, repeat this step to reinstall the module.

4. Verify that the status (STS) LED becomes green.

   If the STS LED does not become green, slide the module out of the chassis, and visually check the electrical connectors on the back side of the chassis for damage. If damaged, contact Cisco Technical Assistance for help. If undamaged, repeat the previous step to reinstall the module.

Replace power supply modules

How to remove and reinstall power supply modules.

The switch requires two power supplies for redundancy. With one power supply providing the necessary power for operations, replace the other power supply during operations as long as the new power supply has the same airflow direction as the other modules in the chassis.

Replace a power supply with another supported power supply that has the same power source type as the other installed power supply. Additionally, the airflow direction of the power supply must match or conform to the airflow direction of the installed fan modules. For the airflow direction used by the switch, see the coloring of the fan modules.

Replace AC power supply modules

How to remove and reinstall an AC power supply module from your switch.

To disconnect the power supply from its power cables, shut off the power from the power source and disconnect the connector for the power cables.

Follow these guidelines when removing or replacing a power supply module.

- The power supply that you are installing must be capable of using the same airflow direction as the fan trays installed in the same switch. It must use the same type of power source as the other power supply installed in the same switch. (Do not mix AC and DC power supplies in the same switch.)

  If the power supply that you are replacing has a different color handle than the replacement power supply, verify that it has or will have the same airflow direction as the other modules in the switch.

  An AC power source must be within reach of the power cable that will be used with the replacement power supply. If you are using n+n power redundancy, there must be a separate power source for each power supply installed in the chassis. Otherwise, only one power source is required.

  There must be an earth-ground connection to the chassis that you are installing the replacement module. Typically, the chassis is grounded by its metal-to-metal connection with a grounded rack. If you need to ground the chassis, see Ground the switch on page 22.

You can replace one power supply while the other one provides power to the switch.

Procedure

1. Remove the power cable from the power supply by pressing the tab of the Anderson Power SAF-D-Grid connector and pull the cable and connector out of the power supply.

   Verify that the LEDs turn off on the power supply that you are removing

2. Grasp the power supply handle while pressing the release latch towards the power supply handle.
3. Place your other hand under the power supply to support it while you slide it out of the chassis.

   Caution

   Do not touch the electrical connectors on the back side of the module. Prevent anything else from coming into contact with or damaging the connectors.

4. Hold the replacement power supply with one hand underneath the module and the other hand holding the handle, turn the power supply so that its release latch is on the side. Align the back end of the power supply (the end with the electrical connections) to the open power supply slot. Carefully slide the power supply all the way into the slot until it clicks into place.

   Note

   If the power supply does not fit into the open slot, turn the module over, before sliding it carefully into the open slot.

5. Test the installation by trying to pull the power supply out of the slot without using the release latch.

   If the power supply does not move out of place, it is secured in the slot. If the power supply moves, carefully press it all the way into the slot until it clicks into place.

6. Attach the power cable to the electrical inlet on the front of the power supply.
7. Verify that the other end of the power cable is attached to the appropriate power source for the power supply.
8. Verify that the power supply is operational by making sure that the power supply LED is green.

Install HVAC/HVDC power supply modules

How install an high-voltage AC or DC power supply module.

You can replace one power supply while the other one provides power to the switch.

> **Note**
>
> If the power supply that you are replacing has a different color handle than the replacement power supply, verify that it has or will have the same airflow direction as the other modules in the switch.

If you are using n+n power redundancy, there must be a separate power source for each power supply installed in the chassis. Power sources must be of the same type–do not mix AC and DC power sources for the same switch. Otherwise, only one power source is required.

There must be an earth-ground connection to the chassis that you are installing the replacement module. Typically, the chassis is grounded by its metal-to-metal connection to a grounded rack. If you need to ground this chassis by another means, see Ground the switch on page 22.

Procedure

1. Holding the replacement power supply with one hand underneath the module and the other hand holding the handle, turn the power supply so that its release latch is on the side. Align the back end of the power supply (the end with the electrical connections) to the open power supply slot. Carefully slide the power supply all the way into the slot until it clicks into place.

   > **Note**
   >
   > If the power supply does not fit into the open slot, turn the module over. Slide it into the open slot.

2. Test the installation by trying to pull the power supply out of the slot without using the release latch.

   If the power supply does not move out of place, it is secured in the slot. If the power supply moves, carefully press it all the way into the slot until it clicks into place.

3. Insert the power supply cord Anderson SAF-D-Grid connector into the power supply inlet. Ensure the connector is locked. Gently tug on the cord near the connector to ensure the locking tab is engaged.
4. Verify that the other end of the power cable is connected to the appropriate power source for the power supply.
5. If using an HVDC power source, turn on the circuit breaker for the DC power source connected to the power supply.
6. Verify that the power supply is operational by making sure that the power supply LED is green.

Replace LVDC power supply modules

How to replace the low-voltage PSU3KW-DCPI-ORV3 on Cisco N9364E-SG2X-O switches.

This procedure applies to PSU3KW-DCPI-ORV3.

Note

While installing or replacing power supplies, ensure that input voltage and power supply capacity remain the same for both the power supplies. If changing to a different power supply capacity or input type (AC to DC), the system must be powered down, and both power supplies must be replaced while the system is still powered down.

Note

We recommend that both the power supply slots of the fixed port switches are installed with power supply unit. If a power module fails, it is recommended to retain the failed power module in its slot until it is replaced with a new power module. This recommendation ensures that the system airflow is not impacted adversely, which may then result in the overheating of the switch and its components. Duration to replace a power supply unit at ambient room temperature (23-degree C to 27-degree C) is within 5 minutes.

Procedure

1. Disconnect the power cable of the power supply unit to be replaced.

   For PSU3KW-DCPI-ORV3, use the pull-tab to release the cable latch and while holding both the pull-tab and the cable connector body, gently pull to disconnect the cable from the power supply unit.

   Caution

   Pulling the cable out of the power supply unit or removing the power supply unit from the switch by using only the pull-tab may cause the pull-tab to break.

Figure 4: Remove the Cable from PSU3KW-DCPI-ORV3

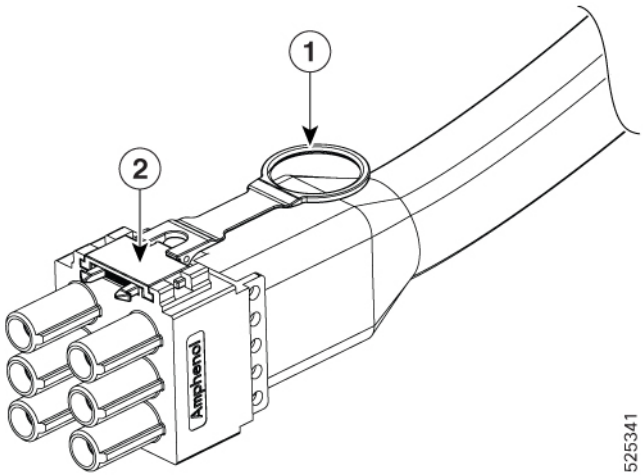

1	Pull tab	2	Cable latch

2. Press the tab inward to unlatch the power supply unit and pull out the power supply unit.
3. Insert the new power supply unit.

> **Note**
>
> If the power supply unit does not go all the way into the slot, do not force it. Remove the power supply unit and verify that it is the correct type for your switch and in the correct orientation.

4. Connect the power supply unit cable.

   For PSU3KW-DCPI-ORV3, you must insert the power cord into the unit.

5. Switch on the power at the source.
6. Wait till the power supply unit LED turns green. Verify the power using the **show environment power** command after the switch boots up.

Install and remove SFP modules

How to install and remove SFP modules from your switch.

Refer to the Cisco N9364E-SG2X-O switch datasheet for a list of supported SFP and SFP+ modules. Use only supported SFP/SFP+ modules on the platform.

> **Warning**
>
> **Statement 1008–**Class 1 Laser Product
>
> This product is a Class 1 laser product.

We recommend that you wait 30 seconds between removal and insertion of an SFP on an interface module. This allows the transceiver software to initialize and synchronize with the standby RSP. Changing an SFP more quickly could result in transceiver initialization issues that disable the SFP

- Do not remove the dust plugs from the SFP and SFP+ modules or the rubber caps from the fiber-optic cable until you are ready to connect the cable. The plugs and caps protect the module ports and cables from contamination and ambient light.
- Removing and installing an SFP and SFP+ module can shorten its useful life. Do not remove and insert any SFP/SFP+ module more often than is necessary.
- To prevent ESD damage, follow your normal board and component handling procedures when connecting cables to the switch and other devices.
- When you insert several SFP and SFP+ modules in multiple ports, wait for 5 seconds between inserting each SFP/SFP+. This will prevent the ports from going into error / disabled mode. Similarly, when you remove an SFP and SFP+ from a port, wait for 5 seconds before reinserting it.

Procedure

1. Attach an ESD-preventive wrist strap to your wrist and to an earth ground surface.
2. Find the send (TX) and receive (RX) markings that identify the top of the SFP/SFP+ module.

   On some SFP/SFP+ modules, the send and receive (TX and RX) markings might be shown by arrows that show the direction of the connection.
3. If the SFP/SFP+ module has a bale-clasp latch, move it to the open, unlocked position.
4. Align the module in front of the slot opening and push until you feel the connector snap into place.
5. If the module has a bale-clasp latch, close it to lock the SFP/SFP+ module in place.
6. Remove the SFP and SFP+ dust plugs and save.
7. Connect the SFP and SFP+ cables.

Install and remove OSFP/QSFP transceiver modules

How to install and remove OSFP/QSFP transceiver modules.

This section provides the installation, cabling, and removal instructions for the Quad Small Form-Factor Pluggable transceiver modules. Refer to the Cisco Transceiver Modules Compatibility Information for additional details on optical transceivers.

The following figure shows a typical 800-Gigabit OSFP (optical small form-factor pluggable) transceiver.

Figure 5: OSFP transceiver module

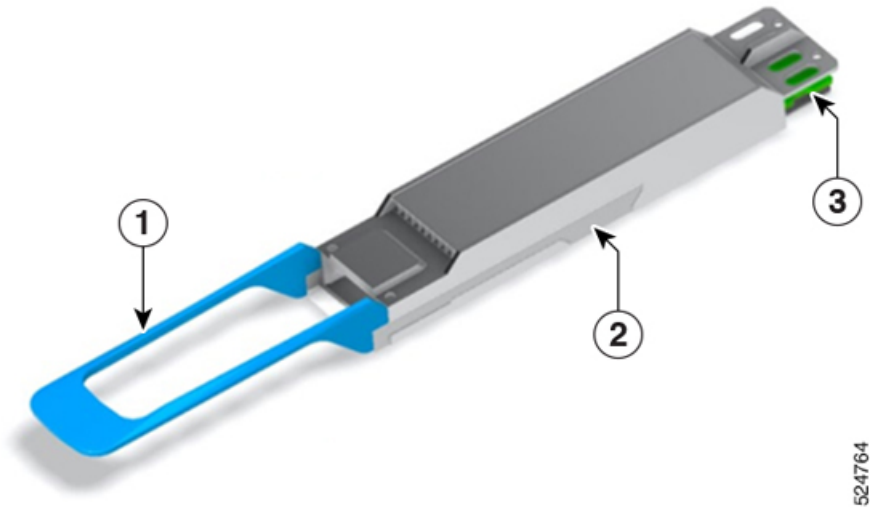

1	Pull tab	2	OSFP transceiver body
3	Electrical connection to the module circuitry		

Warning

Statement 1079—Hot Surface

This icon is a hot surface warning. To avoid personal injury, do not touch without proper protection.



Caution

The transceiver module is a static-sensitive device. Always use an ESD wrist strap or similar individual grounding device when handling transceiver modules or coming into contact with system modules.

Caution

Protect the transceiver ports by inserting clean dust caps (8000-QSFP-DCAP) into any ports not in use or that do not have optical modules plugged in. If optical modules are plugged in but not in use, use the dust caps that were supplied with the optical modules to protect the TX and RX surfaces of the optical module.

Clean the optic surfaces of the fiber cables before you plug them back into the optical ports of another module.

The switch ships with dust caps plugged in. We highly recommend you keep the dust caps plugged in until you are ready to plug an optic. The dust caps protect the ports from possible EMI interference and also avoid contamination due to dust collection.

Caution

To meet the EMI interference requirements, use the metal dust caps when the ports are not in use by optical modules.

Before you begin

Required Tools and Equipment

- Wrist strap or other personal grounding device to prevent ESD occurrences
- Antistatic mat or antistatic foam to set the transceiver on
- Fiber-optic end-face cleaning tools and inspection equipment

Procedure

1. Attach an ESD wrist strap to yourself and a properly grounded point on the chassis or the rack.
2. Remove the transceiver module from its protective packaging.
3. Check the label on the transceiver module body to verify that you have the correct model for your network. Do not remove the dust plug until you're ready to attach the network interface cable. The dust plug is not shown in the images.
4. Hold the transceiver by the pull-tab so that the identifier label is on the top.
5. Align the transceiver module in front of the module's transceiver socket opening and carefully slide the transceiver into the socket until the transceiver contacts the socket electrical connector.

Figure 6: Installing the QSFP transceiver module

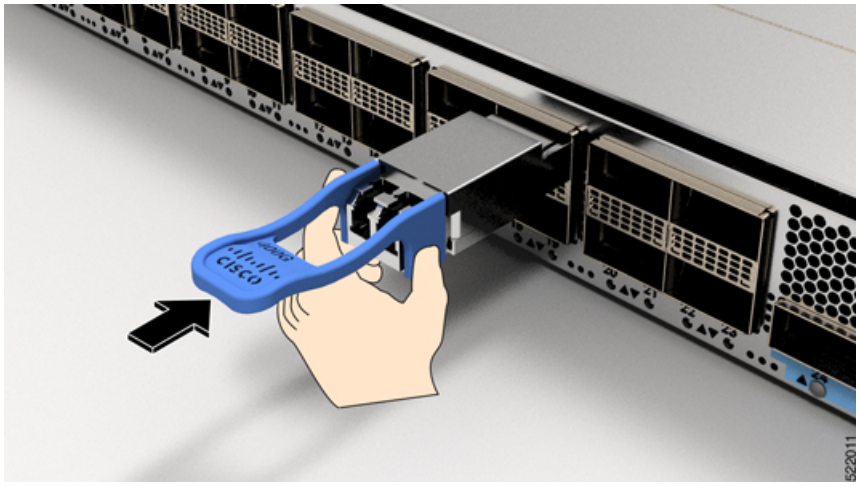

6. Press firmly on the front of the transceiver module with your thumb to fully seat the transceiver in the module's transceiver socket (see figure Seating the QSFP Transceiver Module).

Figure 7: Seating the QSFP transceiver module

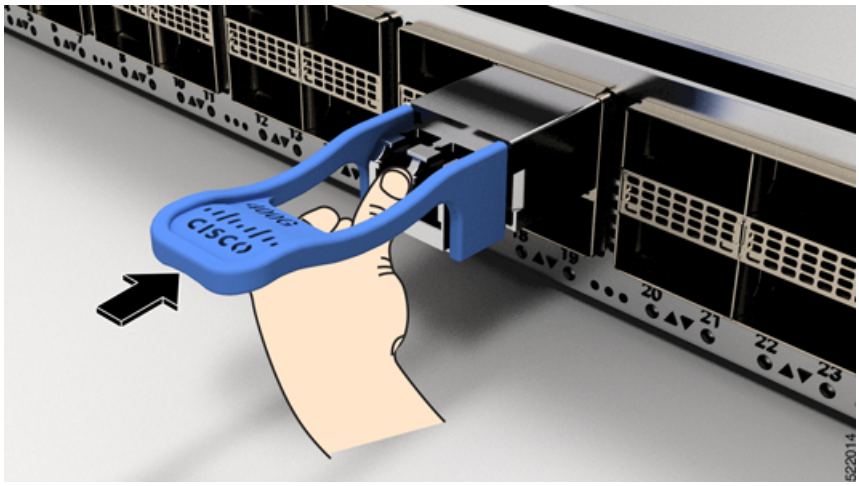

Important

If the latch isn't fully engaged, you might accidentally disconnect the transceiver module.

Attach optical network cables

How to attach an optical network cable for transceiver modules.

- The transceiver modules and fiber connectors are keyed to prevent incorrect insertion.
- The multiple-fiber push-on (MPO) connectors on the optical transceivers support network interface cables with either physical contact (PC) or ultra-physical contact (UPC) flat polished face types. The MPO connectors on the optical transceivers do not support network interface cables with an angle-polished contact (APC) face type.
- Inspect the MPO connector for the correct cable type, cleanliness, and any damage. For complete information on inspecting and cleaning fiber-optic connections, see the *Inspection and Cleaning Procedures for Fiber-Optic Connections* document.

Before you begin

Before you remove the dust plugs and make any optical connections, use these guidelines:

- Keep the protective dust plugs installed in the unplugged fiber-optic cable connectors and in the transceiver optical bores until you are ready to make a connection.
- Inspect and clean the optical connector end faces just before you make any connections.
- Grasp the optical connector only by the housing to plug or unplug a fiber-optic cable.

Procedure

1. Remove the dust plugs from the optical network interface cable MPO connectors and from the transceiver module optical bores. Save the dust plugs for future use.
2. Attach the network interface cable MPO connectors immediately to the transceiver module.

Figure 8: Cabling a transceiver module

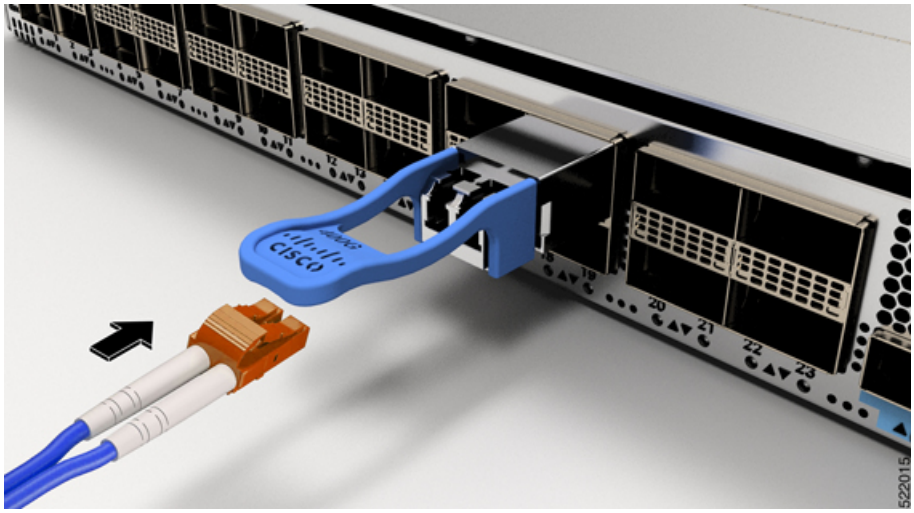

Remove transceiver modules

How to remove a transceiver module from the switch.

> **Caution**
>
> The transceiver module is a static-sensitive device. Always use an ESD wrist strap or similar individual grounding device when handling transceiver modules or coming into contact with modules.

Before you begin

To remove a transceiver module, follow these steps.

Procedure

1. Disconnect the network interface cable from the transceiver connector.
2. Install the dust plug immediately into the transceiver's optical bore.
3. Grasp the pull-tab and gently pull to release the transceiver from the socket.

   Figure 9: Removing a QSFP transceiver module

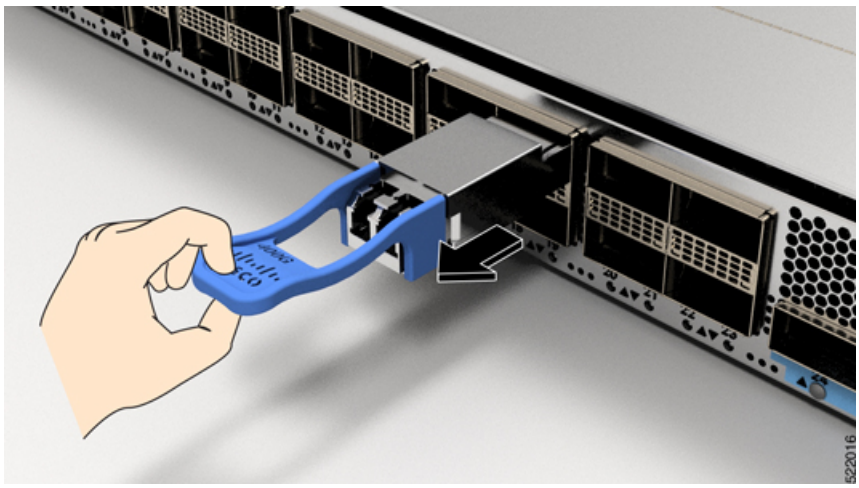

4. Slide the transceiver out of the socket.
5. Place the transceiver module into an antistatic bag.

Replace the coin-cell battery

Instructions to replace the coin-cell battery inside the switch.

Before you begin

The battery is a CR2032 coin-cell battery. Batteries should only be replaced with the same or an equivalent type that is UL 1642 recognized and recommended by the manufacturer. You can use either of these two batteries:

- Panasonic: CR-2032L/BN
- Renata SA: CR2032 MFR

These instructions are provided in order to comply with the EU Battery Replacement Requirement.

- This product was not specifically designed for battery replacement in the field.

- It is recommended that, whenever possible, follow the standard repair or return process for battery issues.

Perform this procedure when the battery requires replacement or maintenance on supported hardware.

Caution

Always wear an ESD-preventive wrist strap and ensure that it makes good contact with your skin when you remove or install the internal modules. Connect the equipment end of the wrist strap to the metal part of the chassis.

Note

Statement 1015—Battery Handling

- Replace the battery only with the same or equivalent type recommended by the manufacturer.
- Do not dismantle, crush, puncture, use a sharp tool to remove, short the external contacts, or dispose of the battery in fire.
- Do not use if battery is warped or swollen.

Warning

Do not use any metal objects to remove or insert the battery into the holder, this can short-circuit the battery. Use plastic objects or your fingers to lift or insert the battery into the holder.

Procedure

1. Before you perform any module replacement, read the Safety Warnings section and disconnect the power supplies.
2. Unfasten the screws and open the hatch on top of the switch.

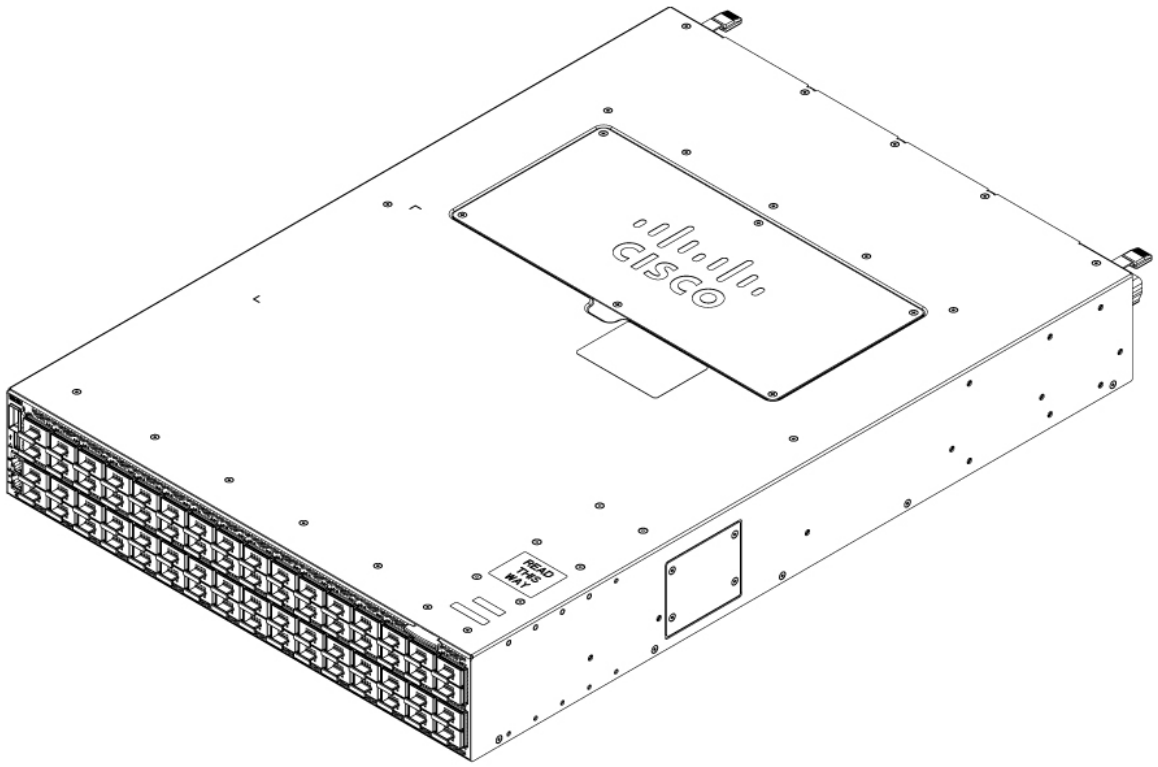

3. Pull the retention arm back from the battery.

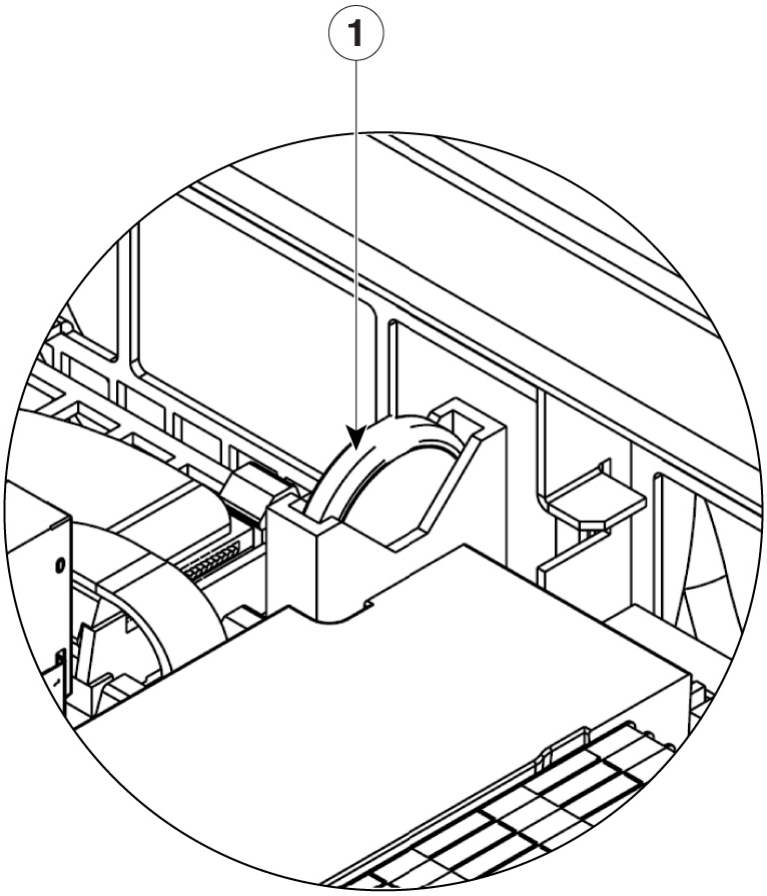

1	Coin cell battery

In this figure, the left side is positive (+) and the right side is negative (–).

4. Lift the battery out of the holder.

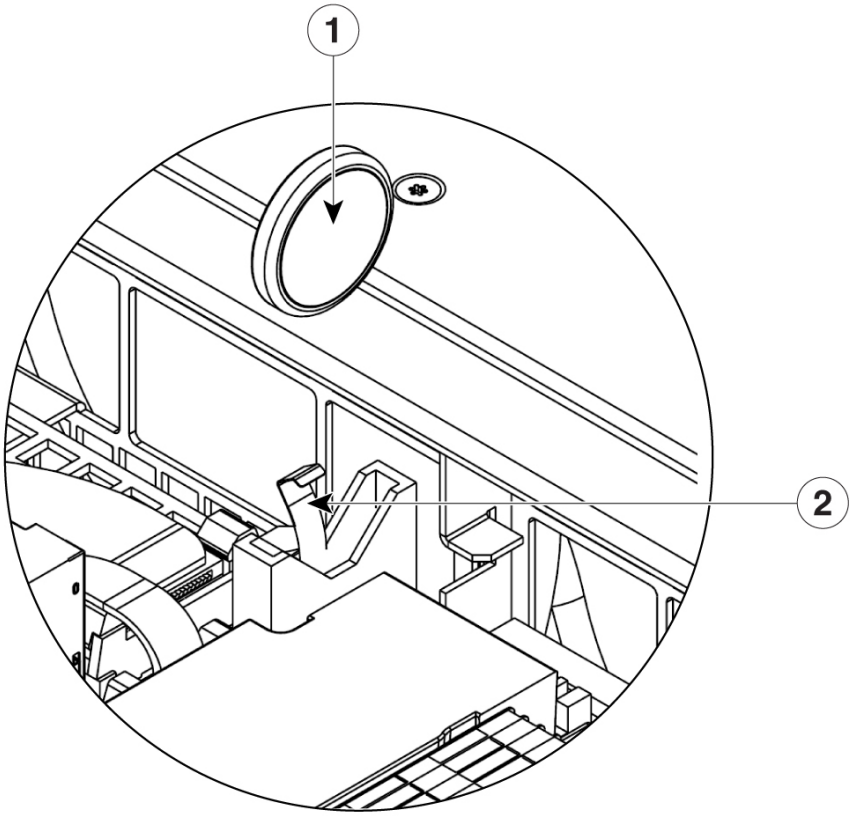

1	Coin-cell battery	2	Retention arm

5. Insert a new battery into the slot and push it in until the spring locks it in place.
6. Secure the hatch to the top of the switch by fastening the screws.

A Rack Specifications

Topics:

- Overview of racks
- General requirements for cabinets and racks
- Requirements for standard open racks
- Requirements for perforated cabinets
- Cable management guidelines

Provides information about the different types of racks an cabinets, the specifications of the racks, and guidelines for using cables.

Overview of racks

Provides an overview of different types of racks and cabinets to mount the switch.

Install the switch in these types of cabinets and racks, assuming an external ambient air temperature range of 0 to 104° F (0 to 40° C):

- Standard perforated cabinets
- Solid-walled cabinets with a roof fan tray (bottom to top cooling)
- Standard open racks

Note

- If you are using an enclosed cabinet, we recommend one of the thermally validated types, either standard perforated or solid-walled with a fan tray.
- We do not recommend using racks that have obstructions (such as power strips). The obstructions could impair access to field-replaceable units (FRUs).

General requirements for cabinets and racks

Specifications for cabinets and racks.

The cabinet or rack must meet these requirements.

This switch rack-mount kit contains the rack mounting brackets for 19-inch rack. To install the chassis in a 23-inch rack or an ETSI rack, you need adapter plates to accommodate the 19-inch rack mount brackets.

- Standard 19-inch (48.3 cm) (two- or four-post EIA cabinet or rack, with mounting rails that conform to English universal hole spacing per section 1 of ANSI/EIA-310-D-1992). For more information, see Requirements Specific to Perforated Cabinets.

  The spacing between the posts of the rack must be (EIA-310-D-1992 19-inch rack compatible) wide enough to accommodate the width of the chassis.

- The minimum vertical rack space requirement per chassis is:
  - For a one RU (rack unit) switch, 1.75 inches (4.4 cm)
  - For a one and a half RU (rack unit) switch, 2.63 (6.68 cm)
  - For a two RU (rack unit) switch, 3.5 inches (8.8 cm)
  - For a three RU (rack unit) switch, 5.25 inches (13.3 cm)

- The width between the rack-mounting rails must be at least 17.75 inches (45.0 cm) if the rear of the device is not attached to the rack. For four-post EIA racks, this measurement is the distance between the two front rails.

Four-post EIA cabinets (perforated or solid-walled) must meet these requirements:

- The minimum spacing for the bend radius for fiber-optic cables should have the front-mounting rails of the cabinet offset from the front door by a minimum of 3 inches (7.6 cm).

- The distance between the outside face of the front mounting rail and the outside face of the back mounting rail should be 23.0 to 30.0 inches (58.4 to 76.2 cm) to allow for rear-bracket installation.

Requirements for standard open racks

The specifications for standard open racks to mount the switch.

If you are mounting the chassis in an open rack (no side panels or doors), ensure that the rack meets these requirements.

- The minimum vertical rack space per chassis must be equal to the rack unit (RU) of the chassis. One rack unit is equal to 1.75 inches (4.4 cm).
- The distance between the chassis air vents and any walls should be 2.5 inches (6.4 cm).

Requirements for perforated cabinets

The specifications for perforated cabinets.

A perforated cabinet has perforations in its front and rear doors and side walls. Perforated cabinets must meet these requirements:

- The front and rear doors must have at least a 60 percent open area perforation pattern, with at least 15 square inches (96.8 square cm) of open area per rack unit of door height.
- The roof should be perforated with at least a 20 percent open area.
- The cabinet floor should be open or perforated to enhance cooling.

The Cisco R Series rack conforms to these requirements.

Cable management guidelines

Guidelines for the management of cables.

To help with cable management, allow additional space in the rack above and below the chassis to make it easier to route all of the fiber optic or copper cables through the rack.

B System Specifications

Topics:

- Environmental specifications
- Switch dimensions
- Switch and module weights and quantities
- Transceiver and cable specifications
- Switch power input requirements
- Power specifications
- Power cable specifications
- 3000W power cable specifications

Provides the environmental specifications of the switch, the weight and dimensions of the switch, fan, and power supply modules, power specifications, and power cable and transceiver cable specifications.

Environmental specifications

The temperature, altitude, and humidity the switch can operate in.

This section describes the environmental specifications of the switch.

Environment		Specification
Temperature	Ambient operating temperature	32 to 104° F (0 to 40° C)
	Ambient nonoperating	-40 to 158° F (-40 to 70° C)
Humidity	Ambient operating humidity	5 to 95%
	Ambient nonoperating	5 to 95%
Altitude	Ambient operating altitude	0 to 10,000 feet (0 to 3,048 meters) For China, 6,562 ft (2000 m)
	Ambient nonoperating	-1000 to 30,000 feet (-304 to 15,150 meters)

Note

The Cisco Nexus switch functions in operating temperatures of up to 40° C at sea level. For every 300 meters (1000 ft) above sea level, the maximum temperature is reduced by 1° C. For more details on environmental requirements, see the Datasheet.

Switch dimensions

The height, width, depth, and weight of the switch.

The section describes the size and weight of the Cisco N9364E-SG2X-O switch.

Table 3: Dimensions and weight of Cisco N9364E-SG2X-O

Width	17.3 inches (43.94 cm)
Depth	• 24.70 inches (62.74 cm) without fan module and power supply module • 26.26 inches (66.70 cm) with fan module and power supply module
Height	3.43 inches (8.71 cm)
Weight	---

Switch and module weights and quantities

Lists the weight of the switch and FRUs.

This section lists the weight of the switch, fans, and power supply modules. It also lists the number of units that are shipped when the switch is ordered.

Component	Weight per Unit	Quantity
Cisco Nexus N9364E-SG2X-O	34.18 lb (15.50 kg) without Fan module and Power supply module 44.86 lb (20.35kg) with Fan module and Power supply module	1
Fan Module Port-side intake (burgundy) (FAN-PI-V4)	– 1.16 lb (1.53 kg)	4
Power Supply module 3000-W AC/HVPI port-side intake (burgundy) (PSU3KW-HVPI)	– 3.02 lb (1.37 kg)	2 (1 for operations and 1 for redundancy)

Transceiver and cable specifications

Provides a link to the transceiver specification and installation information.

To see the transceiver specifications and installation information, see https://www.cisco.com/c/en/us/support/interfaces-modules/transceiver-modules/products-device-support-tables-list.html.

Switch power input requirements

Lists the power input requirements of N9364E-SG2X-O.

This table lists the typical amount of power that the switch consumes. It also lists the maximum amount of power that you must provision for the switch and power supply for peak conditions.

Note

Some power supplies have capabilities that are greater than the maximum power requirements for a switch. To determine the power consumption characteristics for the switch, use the typical and maximum requirements that are listed here.

Switch	Typical Power Consumption (AC or DC)	Maximum Power Consumption (AC or DC)	Heat Dissipation Requirement
Cisco N9364E-SG2X-O	1011 W	2480 W	10096 BTUs per hour

Power specifications

Lists the power specifications for the N9364E-SG2X-O switch.

The N9364E-SG2X-O switch supports 2000W AC, 3000W HVAC, and 3000W LVDC power supplies. The power specifications include the specifications for each type of power supply module.

2000W AC power supply specifications

Lists the specifications of PSU2KW-ACPI.

These specifications apply to PSU2KW-ACPI power supply module.

Property	Specification
Power	2000 W
Input voltage	100–127V AC
Frequency	50 to 60 Hz
Efficiency	90% or greater (20 to 100% load)
Redundancy modes	Combined, n+1, and n+n
RoHS compliance	Yes
Hot swappable	Yes
Airflow direction	Port-side intake airflow

3000W High Voltage AC/DC power supply specifications

Specifications of the 3000W HVAC/HVDC power supply modules.

These specifications apply to the PSU3KW-HVPI power supplies.

Property	Specification
Power	3000 W
Input voltage	200-277V AC
Frequency	50 to 60 Hz
Efficiency	90% or greater (20 to 100% load)
Redundancy modes	Combined, *n*+1, and *n*+*n*
RoHS compliance	Yes
Hot swappable	Yes
Airflow direction	Port-side intake airflow

3000W DC power supply

Provides information about 3,000W LVDC, PSU3K-DCPI-ORV3.

These specifications apply to the PSU3KW-DCPI-ORV3 power supplies.

Property	Specification
Power	3000 W

Property	Specification
Input voltage	+45–54.5V, typical 48V
Efficiency	90% or greater (20 to 100% load)
Redundancy modes	Combined, *n*+1, and *n*+*n*
RoHS compliance	Yes
Hot swappable	Yes
Airflow direction	Port-side intake airflow

Power cable specifications

Lists the cable specifications for AC, HVAC, and LVDC power supply modules.

This section lists the cable specifications for AC, HVAC and LVDC power supply modules.

Power cable specifications for High Voltage AC/DC power supplies

Lists the power cables for HVAC/HVDC power supply modules.

This section lists the power cables that can be used with HVAC/HVDC power supplies.

Location	Part Number	Length	Power Cord Rating
Argentina	CAB-AC-16A-SG-AR	14 feet (4.26 m)	16A, 250 VAC
Australia	CAB-AC-16A-SG-AZ	14 feet (4.26 m)	16A, 250 VAC
Brazil	CAB-AC-16A-SG-BR	14 feet (4.26 m)	16A, 250 VAC
China	CAB-AC-16A-SG-CH CAB-AC-16A-CN	14 feet (4.26 m)	16A, 250 VAC
Europe	CAB-AC-16A-SG-EU	14 feet (4.26 m)	16A, 250 VAC
India	CAB-AC-16A-SG-IND	14 feet (4.26 m)	16A, 250 VAC
International/UK	CAB-AC-16A-SG-IN	14 feet (4.26 m)	16A, 250 VAC
Israel	CAB-AC-16A-SG-IS	14 feet (4.26 m)	16A, 250 VAC
Italy	CAB-AC-16A-SG-IT	14 feet (4.26 m)	16A, 250 VAC
Japan	CAB-AC-16A-SG-JP	14 feet (4.26 m)	16A, 250 VAC
South Africa	CAB-AC-16A-SG-SA	14 feet (4.26 m)	16A, 250 VAC
Switzerland	CAB-AC-16A-SG-SW	14 feet (4.26 m)	16A, 250 VAC
South Korea	CAB-AC-16A-SG-SK	14 feet (4.26 m)	16A, 250 VAC
United Kingdom	CAB-AC-16A-SG-UK	14 feet (4.26 m)	16A, 250 VAC
North America (non locking) 200-240 VAC operation	CAB-AC-20A-SG-US2	14 feet (4.26 m)	20A, 250 VAC

Location	Part Number	Length	Power Cord Rating
North America (locking) 200-240 VAC operation	CAB-AC-20A-SG-US3	14 feet (4.26 m)	20A, 250 VAC
North America 277 VAC operation	CAB-AC-20A-SG-US4	14 feet (4.26 m)	20A, 277 VAC
North America Cabinet Jumper Power Distribution Unit (PDU)	CAB-AC-20A-SG-C20	14 feet (4.26 m)	20A, 250 VAC

HVAC power cables

Lists the high-voltage AC power cables.

This section lists the high-voltage AC and DC power cables supported by the switch.

Part Number	Cord Set Description	Photo
CAB-HVAC-SD-0.6M	HVAC 2-foot (0.6 m) cable with Saf-D-Grid and SD connectors 277V AC	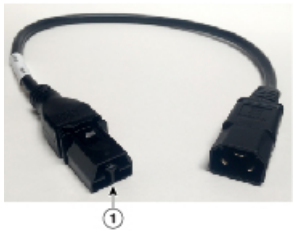
CAB-HVAC-C14-2M	HVAC 6.6-foot (2.0 m) cable with Saf-D-Grid and C14 (use for up to 240 V) connector 250V AC	
CAB-HVAC-RT-0.6M	HVAC 2-foot (0.6 m) cable with Saf-D-Grid and RT connector 277V AC	
NO-POWER-CORD	All except Argentina, Brazil, and Japan No power cord included with switch	Not applicable

3000W power cable specifications

The power cable specifications for 3,000W DC.

This section describes the power cables for 3,000W DC power supply units.

Each 3,000W DC power supply requires four customer-supplied power cables (two negative cables and two positive cables). We recommend using six gauge cables. Cisco supplies 6-gauge lugs for connections to the power supply. You supply the connectors that are required to connect the cables to the DC power source.