Cisco Nexus 9332PQ ACI-Mode Switch Hardware Installation Guide

First Published: 2015-08-04

Last Modified: 2019-03-28

Americas Headquarters
Cisco Systems, Inc.
170 West Tasman Drive
San Jose, CA 95134-1706
USA
http://www.cisco.com
Tel: 408 526-4000
800 553-NETS (6387)
Fax: 408 527-0883

THE SPECIFICATIONS AND INFORMATION REGARDING THE PRODUCTS REFERENCED IN THIS DOCUMENTATION ARE SUBJECT TO CHANGE WITHOUT NOTICE. EXCEPT AS MAY OTHERWISE BE AGREED BY CISCO IN WRITING, ALL STATEMENTS, INFORMATION, AND RECOMMENDATIONS IN THIS DOCUMENTATION ARE PRESENTED WITHOUT WARRANTY OF ANY KIND, EXPRESS OR IMPLIED.

The Cisco End User License Agreement and any supplemental license terms govern your use of any Cisco software, including this product documentation, and are located at: http://www.cisco.com/go/softwareterms.Cisco product warranty information is available at http://www.cisco.com/go/warranty. US Federal Communications Commission Notices are found here http://www.cisco.com/c/en/us/products/us-fcc-notice.html.

IN NO EVENT SHALL CISCO OR ITS SUPPLIERS BE LIABLE FOR ANY INDIRECT, SPECIAL, CONSEQUENTIAL, OR INCIDENTAL DAMAGES, INCLUDING, WITHOUT LIMITATION, LOST PROFITS OR LOSS OR DAMAGE TO DATA ARISING OUT OF THE USE OR INABILITY TO USE THIS MANUAL, EVEN IF CISCO OR ITS SUPPLIERS HAVE BEEN ADVISED OF THE POSSIBILITY OF SUCH DAMAGES.

Any products and features described herein as in development or available at a future date remain in varying stages of development and will be offered on a when-and if-available basis. Any such product or feature roadmaps are subject to change at the sole discretion of Cisco and Cisco will have no liability for delay in the delivery or failure to deliver any products or feature roadmap items that may be set forth in this document.

Any Internet Protocol (IP) addresses and phone numbers used in this document are not intended to be actual addresses and phone numbers. Any examples, command display output, network topology diagrams, and other figures included in the document are shown for illustrative purposes only. Any use of actual IP addresses or phone numbers in illustrative content is unintentional and coincidental.

The documentation set for this product strives to use bias-free language. For the purposes of this documentation set, bias-free is defined as language that does not imply discrimination based on age, disability, gender, racial identity, ethnic identity, sexual orientation, socioeconomic status, and intersectionality. Exceptions may be present in the documentation due to language that is hardcoded in the user interfaces of the product software, language used based on RFP documentation, or language that is used by a referenced third-party product.

Cisco and the Cisco logo are trademarks or registered trademarks of Cisco and/or its affiliates in the U.S. and other countries. To view a list of Cisco trademarks, go to this URL: www.cisco.com go trademarks. Third-party trademarks mentioned are the property of their respective owners. The use of the word partner does not imply a partnership relationship between Cisco and any other company. (1721R)

© 2015–2017 Cisco Systems, Inc. All rights reserved.

CONTENTS

Trademarks ?

PREFACE

Preface vii

Audience vii

Documentation Conventions vii

Related Documentation viii

Documentation Feedback x

Obtaining Documentation and Submitting a Service Request x

CHAPTER 1

Overview 1

Overview 1

CHAPTER 2

Preparing the Site 5

Temperature Requirements 5

Humidity Requirements 5

Altitude Requirements 6

Dust and Particulate Requirements 6

Minimizing Electromagnetic and Radio Frequency Interference 6

Shock and Vibration Requirements 7

Grounding Requirements 7

Planning for Power Requirements 7

Airflow Requirements 9

Rack and Cabinet Requirements 10

Clearance Requirements 11

CHAPTER 3

Installing the Switch Chassis 13

Safety 13
Installation Options with Rack-Mount Kits 16
Airflow Considerations 17
Installation Guidelines 17
Unpacking and Inspecting the Switch 18
Installing the Switch Using the NXK-ACC-KIT-1RU Rack-Mount Kit 19
Installing the Switch Using the N3K-C3064-ACC-KIT Rack-Mount Kit 23
Grounding the Chassis 27
Starting the Switch 29

CHAPTER 4 **Connecting the Switch to the ACI Fabric** 31
ACI Fabric Topology 31
Preparing to Connect to Other Devices 32
Connecting Leaf Switches to APICs 33
Connecting Leaf Switches to Spine Switches 35
Installing a Gigabit Ethernet module (GEM) 36
Migration of Nodes From a First Generation Switch to a Second Generation Switch 36
Setting Up an Optional Console Interface 38
Setting Up an Optional Management Connection 39
Maintaining Transceivers and Optical Cables 39

CHAPTER 5 **Replacing Components** 41
Replacing a Fan Module 41
Removing a Fan Module 41
Installing a Fan Module 42
Replacing a Power Supply Module 42
Replacing an AC Power Supply 42
Replacing a DC Power Supply 43

APPENDIX A **Rack Specifications** 47
Overview of Racks 47
General Requirements for Cabinets and Racks 47
Requirements Specific to Standard Open Racks 48
Requirements Specific to Perforated Cabinets 48

Cable Management Guidelines 48

APPENDIX B System Specifications 49
Environmental Specifications 49
Switch Dimensions 49
Switch and Module Weights and Quantities 50
Transceiver and Cable Specifications 50
Switch Power Input Requirements 50
Power Specifications 51
650-W AC Power Supply Specifications 51
930-W DC Power Supply (Port-Side Intake) Specifications 51
930-W DC Power Supply (Port-Side Exhaust) Specifications 52
Power Cable Specifications 52
Power Cable Specifications for AC Power Supplies 52
HVAC/HVDC Power Cables Supported by ACI-Mode and NX-OS Mode Switches 54
DC Power Cable Specifications 54
Regulatory Standards Compliance Specifications 55

APPENDIX C LEDs 57
Switch Chassis LEDs 57
Lane Link LEDs 58
Fan Module LEDs 58
Power Supply LEDs 58

APPENDIX D Additional Kits 61
Rack Mount Kit NXK-ACC-KIT-1RU 61
Rack Mount Kit N3K-C3064-ACC-KIT 62

APPENDIX E Site Preparation and Maintenance Records 63
Site Preparation Checklist 63
Contact and Site Information 64
Chassis and Module Information 65

Preface

- Audience, on page vii
- Documentation Conventions, on page vii
- Related Documentation, on page viii
- Documentation Feedback, on page x
- Obtaining Documentation and Submitting a Service Request , on page x

Audience

This publication is for hardware installers and network administrators who install, configure, and maintain Cisco Nexus switches.

Documentation Conventions

Command descriptions use the following conventions:

Convention	Description
bold	Bold text indicates the commands and keywords that you enter literally as shown.
Italic	Italic text indicates arguments for which the user supplies the values.
[x]	Square brackets enclose an optional element (keyword or argument).
[x | y]	Square brackets enclosing keywords or arguments separated by a vertical bar indicate an optional choice.
{x | y}	Braces enclosing keywords or arguments separated by a vertical bar indicate a required choice.
[x {y | z}]	Nested set of square brackets or braces indicate optional or required choices within optional or required elements. Braces and a vertical bar within square brackets indicate a required choice within an optional element.
`variable`	Indicates a variable for which you supply values, in context where italics cannot be used.

Convention	Description
string	A nonquoted set of characters. Do not use quotation marks around the string or the string will include the quotation marks.

Examples use the following conventions:

Convention	Description
`screen font`	Terminal sessions and information the switch displays are in screen font.
`boldface screen font`	Information you must enter is in boldface screen font.
italic screen font	Arguments for which you supply values are in italic screen font.
< >	Nonprinting characters, such as passwords, are in angle brackets.
[ ]	Default responses to system prompts are in square brackets.
!, #	An exclamation point (!) or a pound sign (#) at the beginning of a line of code indicates a comment line.

Related Documentation

The Application Centric Infrastructure documentation set includes the following documents that are available on Cisco.com at the following URL:
https://www.cisco.com/c/en/us/support/cloud-systems-management/application-policy-infrastructure-controller-apic/tsd-products-support-series-home.html.

Web-Based Documentation

- *Cisco APIC Management Information Mode Reference*
- *Cisco APIC Online Help Reference*
- *Cisco APIC Python SDK Reference*
- *Cisco ACI Compatibility Tool*
- *Cisco ACI MIB Support List*

Downloadable Documentation

- *Knowledge Base Articles* (KB Articles)are available at the following URL:
  https://www.cisco.com/c/en/us/support/cloud-systems-management/application-policy-infrastructure-controller-apic/products-configuration-examples-list.html
- *Cisco Application Centric Infrastructure Controller Release Notes*
- *Cisco Application Centric Infrastructure Fundamentals Guide*
- *Cisco APIC Getting Started Guide*
- *Cisco ACI Virtualization Guide*
- *Cisco APIC REST API User Guide*
- *Cisco APIC Command Line Interface User Guide*

- *Cisco APIC Faults, Events, and System Messages Management Guide*
- *Cisco ACI System Messages Reference Guide*
- *Cisco APIC Layer 4 to Layer 7 Services Deployment Guide*
- *Cisco APIC Layer 4 to Layer 7 Device Package Development Guide*
- *Cisco APIC Layer 4 to Layer 7 Device Package Test Guide*
- *Cisco ACI Firmware Management Guide*
- *Cisco ACI Troubleshooting Guide*
- *Cisco ACI Switch Command Reference, NX-OS Release 11.0*
- *Cisco Verified Scalability Guide for Cisco ACI*
- *Cisco ACI MIB Quick Reference*
- *Cisco Nexus CLI to Cisco APIC Mapping Guide*
- *Application Centric Inftrastructure Fabric Hardware Installation Guide*
- *Cisco NX-OS Release Notes for Cisco Nexus 9000 Series ACI-Mode Switches*
- *Cisco Nexus 9000 Series ACI Mode Licensing Guide*
- *Cisco Nexus 93108TX-EX ACI-Mode Switch Hardware Installation Guide*
- *Cisco Nexus 93108TX-FX ACI-Mode Switch Hardware Installation Guide*
- *Cisco Nexus 93120TX ACI-Mode Switch Hardware Installation Guide*
- *Cisco Nexus 93128TX ACI-Mode Switch Hardware Installation Guide*
- *Cisco Nexus 93180LC-EX ACI-Mode Switch Hardware Installation Guide*
- *Cisco Nexus 93180YC-EX ACI-Mode Switch Hardware Installation Guide*
- *Cisco Nexus 93180YC-FX ACI-Mode Switch Hardware Installation Guide*
- *Cisco Nexus 9332PQ ACI-Mode Switch Hardware Installation Guide*
- *Cisco Nexus 9336PQ ACI-Mode Switch Hardware Installation Guide*
- *Cisco Nexus 9372PX and 9372PX-E ACI-Mode Switches Hardware Installation Guide*
- *Cisco Nexus 9372TX and 9372TX-E ACI-Mode Switches Hardware Installation Guide*
- *Cisco Nexus 9396PX ACI-Mode Switch Hardware Installation Guide*
- *Cisco Nexus 9396TX ACI-Mode Switch Hardware Installation Guide*
- *Cisco Nexus 9504 ACI-Mode Switch Hardware Installation Guide*
- *Cisco Nexus 9508 ACI-Mode Switch Hardware Installation Guide*
- *Cisco Nexus 9516 ACI-Mode Switch Hardware Installation Guide*

Cisco Application Centric Infrastructure (ACI) Simulator Documentation

The following Cisco ACI Simulator documentation is available at https://www.cisco.com/c/en/us/support/cloud-systems-management/application-centric-infrastructure-simulator/tsd-products-support-series-home.html.

- *Cisco ACI Simulator Release Notes*
- *Cisco ACI Simulator Installation Guide*
- *Cisco ACI Simulator Getting Started Guide*

Cisco Nexus 9000 Series Switches Documentation

The Cisco Nexus 9000 Series Switches documentation is available at https://www.cisco.com/c/en/us/support/switches/nexus-9000-series-switches/tsd-products-support-series-home.html.

Cisco Application Virtual Switch Documentation

The Cisco Application Virtual Switch (AVS) documentation is available at https://www.cisco.com/c/en/us/support/switches/application-virtual-switch/tsd-products-support-series-home.html.

Documentation Feedback

To provide technical feedback on this document, or to report an error or omission, please send your comments to apic-docfeedback@cisco.com. We appreciate your feedback.

Obtaining Documentation and Submitting a Service Request

For information on obtaining documentation, using the Cisco Bug Search Tool (BST), submitting a service request, and gathering additional information, see *What's New in Cisco Product Documentation*, at: https://www.cisco.com/warp/public/687/Directory/DirTAC.shtml.

Subscribe to *What's New in Cisco Product Documentation*, which lists all new and revised Cisco technical documentation as an RSS feed and delivers content directly to your desktop using a reader application. The RSS feeds are a free service.

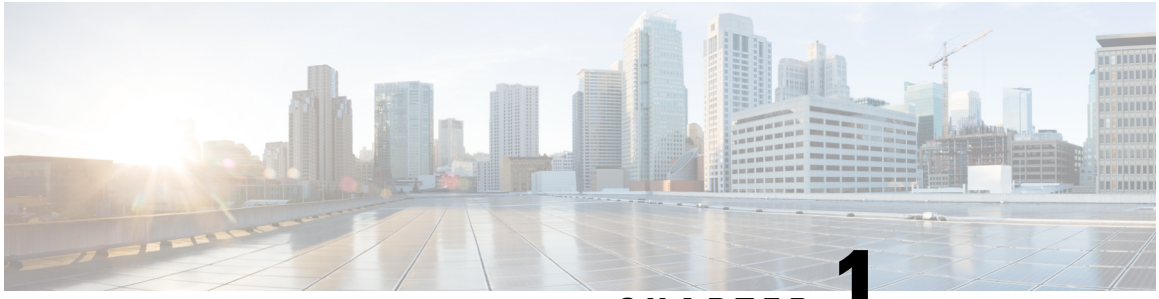

CHAPTER 1

Overview

• Overview, on page 1

Overview

The Cisco Nexus 9332PQ switch (N9K-C9332PQ) is a 1 rack unit (RU) switch that supports 26 40-Gigabit QSFP+ downlink ports (ports 1 to 12 and 15 to 26 support the Dynamic Breakout cabling), 6 40-Gigabit QSFP+ uplink ports, one 100/1000 network management ports, one RS-232 console port for setting the initial switch configuration, and two USB ports for saving or loading switch configurations.

Note Beginning with Cisco ACI Release 12.2, you can use 40-Gigabit to 4X10-Gigabit breakout cables with the downlink ports 1 to 12 and 15 to 26.

The chassis for this switch includes the following user-replaceable components:

- Fan modules (four) with the following airflow choices:
  - Port-side intake fan module with burgundy coloring (NXA-FAN-30CFM-B)
  - Port-side exhaust fan module with blue coloring (NXA-FAN-30CFM-F)
- Power supplies (two—one for operations and one for redundancy [1+1]) with the following choices:
  - 650-W AC power supply with port-side intake airflow (burgundy coloring) (N9K-PAC-650W)
  - 650-W AC power supply with port-side exhaust airflow (blue coloring) (N9K-PAC-650W-B)
  - 930-W DC power supply with port-side intake airflow (green coloring) (UCSC-PSU-930WDC)
  - 930-W DC power supply with port-side exhaust airflow (gray coloring) (UCS-PSU-6332-DC)

Note Do not mix AC and DC power supplies in the same chassis.

Note All fan modules and power supplies must use the same airflow direction during operations.

The switch supports the Fabric Extenders (FEXs) listed at https://www.cisco.com/c/en/us/td/docs/switches/datacenter/nexus9000/hw/interoperability/fexmatrix/fextables.html.

The following figure shows the switch features on the port side of the chassis.

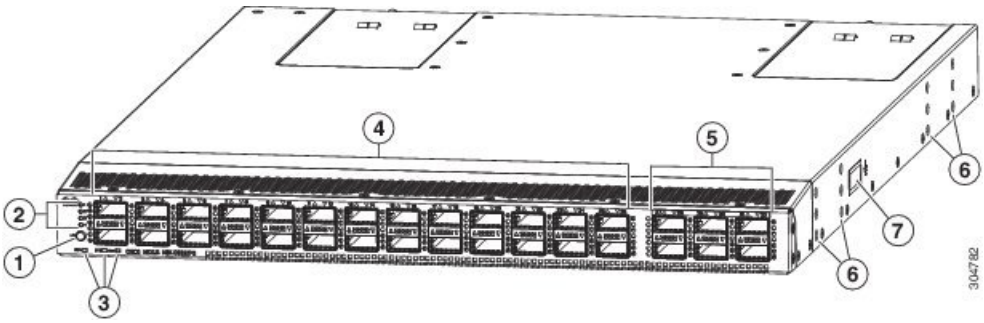

1	Port lane switch button	5	40-Gigabit QSFP+ spine-facing ports (6)
2	Port lane LEDs	6	Screw holes for mounting brackets
3	Beacon (BCN), Status (STS), and Environment (ENV) LEDs	7	Grounding pad
4	40-Gigabit QSFP+ APIC-facing interface ports (26). Ports 1 to 12 and 15 to 26 also support 40-Gigabit-to-4x10-Gigabit breakout cables with the Dynamic Breakout feature.		

To determine which transceivers, adapters, and cables are supported by this switch, see the Cisco Transceiver Modules Compatibility Information document.

The following figure shows the switch features on the power supply side of the chassis.

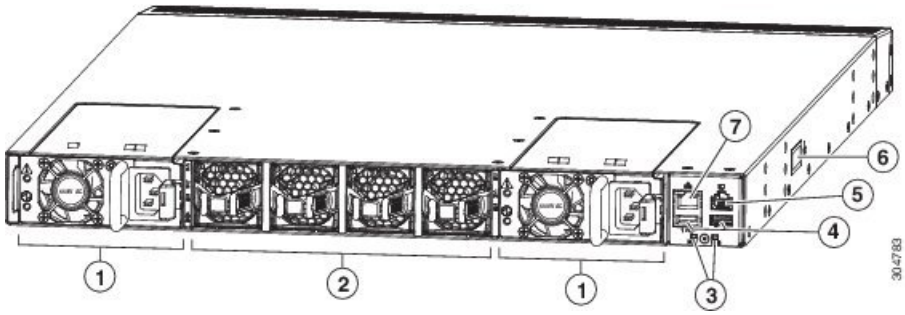

1	Power supply modules (1 or 2) (AC power supply shown) with slots numbered from 1 (left) to 4 (right).	5	Console port (1)
2	Fan modules (4) with slots numbered 1 (left) and 2 (right).	6	Grounding pad

3	Beacon (BCN) and Status (STS) LEDs	7	Management port (1)
4	USB ports (2)		

Depending on whether you plan to position the ports in a hot or cold aisle, you can order the fan and power supply modules with port-side intake or port-side exhaust airflow. For port-side intake airflow, the fan and AC power supply modules have burgundy coloring (DC power supply modules have green coloring). For port-side exhaust airflow, the fan and AC power supplies have blue coloring (DC power supply modules have gray coloring).

The fan and power supply modules are field replaceable and you can replace one fan module or one power supply module during operations so long as the other modules are installed and operating. If you have only one power supply installed, you can install the replacement power supply in the open slot before removing the original power supply.

Note All of the fan and power supply modules must have the same direction of airflow. Otherwise, the switch can overheat and shut down. If you are installing a dual-direction power supply, that module will automatically use the same airflow direction as the other modules in the switch.

Caution If the switch has port-side intake airflow (burgundy coloring for fan modules), you must locate the ports in the cold aisle. If the switch has port-side exhaust airflow (blue coloring for fan modules), you must locate the ports in the hot aisle. If you locate the air intake in a hot aisle, the switch can overheat and shut down.

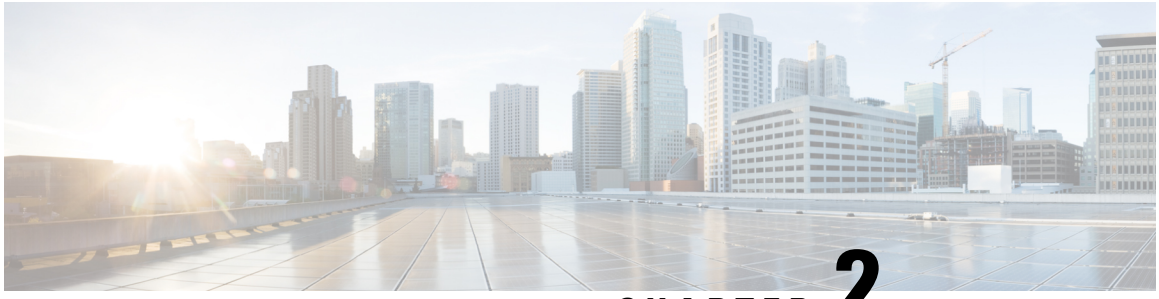

CHAPTER 2

Preparing the Site

- Temperature Requirements, on page 5
- Humidity Requirements, on page 5
- Altitude Requirements, on page 6
- Dust and Particulate Requirements, on page 6
- Minimizing Electromagnetic and Radio Frequency Interference, on page 6
- Shock and Vibration Requirements, on page 7
- Grounding Requirements, on page 7
- Planning for Power Requirements, on page 7
- Airflow Requirements, on page 9
- Rack and Cabinet Requirements, on page 10
- Clearance Requirements, on page 11

Temperature Requirements

The switch requires an operating temperature of 32 to 104 degrees Fahrenheit (0 to 40 degrees Celsius). If the switch is not operating, the temperature must be between –40 to 158 degrees Fahrenheit (–40 to 70 degrees Celsius).

Humidity Requirements

High humidity can cause moisture to enter the switch. Moisture can cause corrosion of internal components and degradation of properties such as electrical resistance, thermal conductivity, physical strength, and size. The switch is rated to withstand from 5- to 95-percent (nonoperating) and 5- to 90-percent (operating) relative humidity.

Buildings in which the climate is controlled by air-conditioning in the warmer months and by heat during the colder months usually maintain an acceptable level of humidity for the switch equipment. However, if the switch is located in an unusually humid location, use a dehumidifier to maintain the humidity within an acceptable range.

Altitude Requirements

Altitude rating is based on power supply installed; see critical components list in the system CB report for altitude rating.

Dust and Particulate Requirements

Exhaust fans cool power supplies and system fans cool switches by drawing in air and exhausting air out through various openings in the chassis. However, fans also ingest dust and other particles, causing contaminant buildup in the switch and increased internal chassis temperature. Dust and particles can act as insulators and interfere with the mechanical components in the switch. A clean operating environment can greatly reduce the negative effects of dust and other particles.

In addition to keeping your environment free of dust and particles, follow these precautions to avoid contamination of your switch:

- Do not permit smoking near the switch.
- Do not permit food or drink near the switch.

Minimizing Electromagnetic and Radio Frequency Interference

Electromagnetic interference (EMI) and radio frequency interference (RFI) from the switch can adversely affect other devices, such as radio and television (TV) receivers. Radio frequencies that emanate from the switch can also interfere with cordless and low-power telephones. Conversely, RFI from high-power telephones can cause spurious characters to appear on the switch monitor.

RFI is defined as any EMI with a frequency above 10 kHz. This type of interference can travel from the switch to other devices through the power cable and power source or through the air as transmitted radio waves. The Federal Communications Commission (FCC) publishes specific regulations to limit the amount of EMI and RFI that are emitted by computing equipment. Each switch meets these FCC regulations.

To reduce the possibility of EMI and RFI, follow these guidelines:

- Cover all open expansion slots with a blank filler plate.
- Always use shielded cables with metal connector shells for attaching peripherals to the switch.

When wires are run for any significant distance in an electromagnetic field, interference can occur to the signals on the wires with the following implications:

- Bad wiring can result in radio interference emanating from the plant wiring.
- Strong EMI, especially when it is caused by lightning or radio transmitters, can destroy the signal drivers and receivers in the chassis and even create an electrical hazard by conducting power surges through lines into equipment.

Note To predict and prevent strong EMI, you need to consult experts in radio frequency interference (RFI).

The wiring is unlikely to emit radio interference if you use a twisted-pair cable with a good distribution of grounding conductors. If you exceed the recommended distances, use a high-quality twisted-pair cable with one ground conductor for each data signal when applicable.

Caution If the wires exceed the recommended distances, or if wires pass between buildings, give special consideration to the effect of a lightning strike in your vicinity. The electromagnetic pulse that is caused by lightning or other high-energy phenomena can easily couple enough energy into unshielded conductors to destroy electronic switches. You will want to consult experts in electrical surge suppression and shielding if you had similar problems in the past.

Shock and Vibration Requirements

The switch has been shock- and vibration-tested for operating ranges, handling, and earthquake standards.

Grounding Requirements

The switch is sensitive to variations in voltage that is supplied by the power sources. Overvoltage, undervoltage, and transients (or spikes) can erase data from memory or cause components to fail. To protect against these types of problems, ensure that there is an earth-ground connection for the switch. You can connect the grounding pad on the switch either directly to the earth-ground connection or to a fully bonded and grounded rack.

When you properly install the chassis in a grounded rack, the switch is grounded because it has a metal-to-metal connection to the rack. Alternatively, you can ground the chassis by using a customer-supplied grounding cable that meets your local and national installation requirements. For U.S. installations, we recommend 6-AWG wire. Connect your grounding cable to the chassis with a grounding lug (provided in the switch accessory kit) and to the facility ground.

Note You automatically ground AC power supplies when you connect them to AC power sources. For DC power supplies, you must connect a grounding wire when wiring the power supply to the DC power source.

Note An electrical conducting path shall exist between the product chassis and the metal surface of the enclosure or rack in which it is mounted or to a grounding conductor. Electrical continuity shall be provided by using thread-forming type mounting screws that remove any paint or non-conductive coatings and establish a metal-to-metal contact. Any paint or other non-conductive coatings shall be removed on the surfaces between the mounting hardware and the enclosure or rack. The surfaces shall be cleaned and an antioxidant applied before installation.

Planning for Power Requirements

The switch includes two power supplies (1-to-1 redundancy with current sharing) in one of the following combinations:

- Two 650-W AC power supplies
- Two 930-W DC power supplies

Note Both power supplies must be the same type. Do not mix AC and DC power supplies in the same chassis.

Note For *n*+1 redundancy, you can use one or two power sources for the two power supplies. For *n*+*n* redundancy, you must use two power sources and connect each power supply to a separate power source.

The power supplies are rated to output up to 650 W (AC power supplies), but the switch requires less than those amounts of power from the power supply. To operate the switch, you must provision enough power from the power source to cover the requirements of both the switch and a power supply. Typically, this switch and a power supply require about 228 W of power input from the power source, but you must provision as much as 508 W power input from the power source to cover peak demand.

Note Some of the power supply modules have rating capabilities that exceed the switch requirements. When calculating your power requirements, use the switch requirements to determine the amount of power that is required for the power supplies.

To minimize the possibility of circuit failure, make sure that each power-source circuit that is used by the switch is dedicated to the switch.

Note For AC input application, please refer to the following statement:

Warning **Statement 1005**—Circuit Breaker when using AC power supplies

This product relies on the building's installation for short-circuit (overcurrent) protection. Ensure that the protective devices are rated not greater than 20A (North America), 16A (Europe), and 13A (UK).

Note For DC input application, please refer to the following statement:

Warning **Statement 1005**—Circuit Breaker when using DC power supplies

This product relies on the building's installation for short-circuit (overcurrent) protection.

- Ensure that the protective devices are rated not greater than 30A when the switch is powered with regular DC power supplies (rated 48-60VDC).
- Ensure that the protective devices are rated not greater than 10A when the switch is powered with HVDC power supplies (rated 240-350VDC).

Warning **Statement 1033**

Connect the unit only to DC power source that complies with the Safety Extra-Low Voltage (SELV) requirements in IEC 60950 based safety standards.

Note We recommend 8-AWG wire for DC installations in the U.S.

Note For the power cables to use with the power supplies, see Power Cable Specifications, on page 52.

Airflow Requirements

The switch is positioned with its ports in either the front or the rear of the rack depending on your cabling and maintenance requirements. You must have fan and power supply modules that move the coolant air from the cold aisle to the hot aisle in one of the following ways:

- Port-side exhaust airflow—Cool air enters the chassis through the fan and power supply modules in the cold aisle and exhausts through the port end of the chassis in the hot aisle.
- Port-side intake airflow—Cool air enters the chassis through the port end in the cold aisle and exhausts through the fan and power supply modules in the hot aisle.

You can identify the airflow direction of each fan and power supply module by its coloring as follows:

- Blue coloring indicates port-side exhaust airflow.
- Burgundy coloring indicates port-side intake airflow.
- White coloring on HVAC/HVDC power supplies indicates dual-direction airflow.
- Gray coloring on DC power supplies indicates port-side exhaust airflow.
- Green coloring on DC power supplies indicates port-side intake airflow.

Note To prevent the switch from overheating and shutting down, you must position the air intake for the switch in a cold aisle. The fan and power supply modules must have the same direction of airflow (even if their coloring is different). If you must change the airflow direction for the switch, you must shutdown the switch before changing the modules.

Rack and Cabinet Requirements

You can install the following types of racks or cabinets for your switch:

- Standard perforated cabinets
- Solid-walled cabinets with a roof fan tray (bottom-to-top cooling)
- Standard open four-post Telco racks

Work with your cabinet vendors to determine which of their cabinets meet the following requirements or see the Cisco Technical Assistance Center (TAC) for recommendations:

- Use a standard 19-inch (48.3-cm), four-post Electronic Industries Alliance (EIA) cabinet or rack with mounting rails that conform to English universal hole spacing per section 1 of the ANSI/EIA-310-D-1992 standard.
- The depth of a four-post rack must be 24 to 32 inches (61.0 to 81.3 cm) between the front and rear mounting rails (for proper mounting of the bottom-support brackets or other mounting hardware).
- Required clearances between the chassis and the edges of its rack or the interior of its cabinet are as follows:
  - 4.5 inches (11.4 cm) between the front of the chassis and the interior of the cabinet (required for cabling).
  - 3.0 inches (7.6 cm) between the rear of the chassis and the interior of the cabinet (required for airflow in the cabinet if used).
  - No clearance is required between the chassis and the sides of the rack or cabinet (no side airflow).

Also, you must have power receptacles that are located within reach of the power cords that are used with the switch.

Warning **Statement 1048—**Rack Stabilization

The rack stabilizing mechanism must be in place, or the rack must be bolted to the floor before installation or servicing. Failure to stabilize the rack can cause bodily injury.

Clearance Requirements

Provide the chassis with adequate clearance between the chassis and any other rack, device, or structure so that you can properly install the chassis. Provide the chassis with adequate clearance to route cables, provide airflow, and maintain the switch. For the clearances required for an installation of this chassis in a four-post rack, see the following figure.

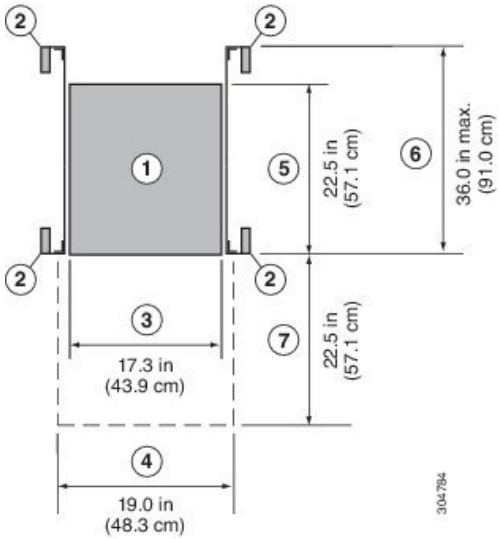

1	Chassis	5	Depth of the chassis
2	Vertical rack-mount posts and rails	6	Maximum extension of the bottom-support rails 36.0 in (91.0 cm)
3	Chassis width 17.3 in (43.9 cm)	7	Depth of the front clearance area (equal to the depth of the chassis).
4	Width of the front clearance area (equal to the width of the chassis with two rack-mount brackets that are attached to it). 19.0 in (43.3 cm)		

Note Both the front and rear of the chassis must be open to both aisles for airflow.

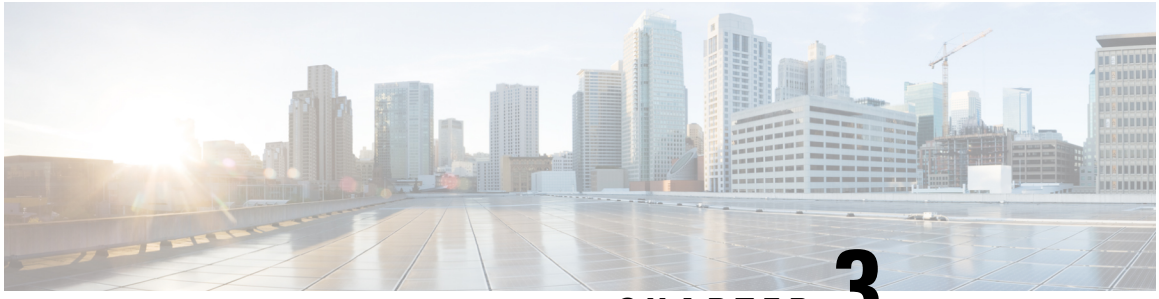

CHAPTER 3

Installing the Switch Chassis

- Safety, on page 13
- Installation Options with Rack-Mount Kits, on page 16
- Airflow Considerations, on page 17
- Installation Guidelines, on page 17
- Unpacking and Inspecting the Switch, on page 18
- Installing the Switch Using the NXK-ACC-KIT-1RU Rack-Mount Kit, on page 19
- Installing the Switch Using the N3K-C3064-ACC-KIT Rack-Mount Kit, on page 23
- Grounding the Chassis, on page 27
- Starting the Switch, on page 29

Safety

Before you install, operate, or service the switch, see the *Regulatory, Compliance, and Safety Information for the Cisco Nexus 3000 and 9000 Series* for important Safety Information.

Warning **Statement 1071—**Warning Definition

IMPORTANT SAFETY INSTRUCTIONS

Before you work on any equipment, be aware of the hazards involved with electrical circuitry and be familiar with standard practices for preventing accidents. Read the installation instructions before using, installing, or connecting the system to the power source. Use the statement number provided at the end of each warning statement to locate its translation in the translated safety warnings for this device.

SAVE THESE INSTRUCTIONS

Warning **Statement 1089—**Instructed and Skilled Person Definitions

An instructed person is someone who has been instructed and trained by a skilled person and takes the necessary precautions when working with equipment.

A skilled person or qualified personnel is someone who has training or experience in the equipment technology and understands potential hazards when working with equipment.

Warning **Statement 1004—**Installation Instructions

Read the installation instructions before using, installing, or connecting the system to the power source.

Warning **Statement 1074—**Comply with Local and National Electrical Codes

To reduce risk of electric shock or fire, installation of the equipment must comply with local and national electrical codes.

Note **Statement 407—**Japanese Safety Instruction

You are strongly advised to read the safety instruction before using the product.

https://www.cisco.com/web/JP/techdoc/pldoc/pldoc.html

When installing the product, use the provided or designated connection cables/power cables/AC adapters.

〈製品仕様における安全上の注意〉
www.cisco.com/web/JP/techdoc/index.html

接続ケーブル、電源コードセット、ACアダプタ、バッテリなどの部品は、必ず添付品または指定品をご使用ください。添付品・指定品以外をご使用になると故障や動作不良、火災の原因となります。また、電源コードセットは弊社が指定する製品以外の電気機器には使用できないためご注意ください。

Warning **Statement 1017—**Restricted Area

This unit is intended for installation in restricted access areas. Only skilled, instructed, or qualified personnel can access a restricted access area.

Warning **Statement 1030—**Equipment Installation

Only trained and qualified personnel should be allowed to install, replace, or service this equipment.

Warning **Statement 1091—**Installation by an Instructed Person

Only an instructed person or skilled person should be allowed to install, replace, or service this equipment. See statement 1089 for the definition of an instructed or skilled person.

Warning **Statement 1028—**More Than One Power Supply

This unit might have more than one power supply connection. To reduce risk of electric shock, remove all connections to de-energize the unit.

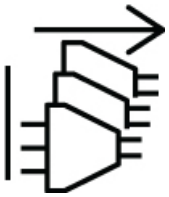

Warning **Statement 1003—**DC Power Disconnection

To reduce risk of electric shock or personal injury, disconnect DC power before removing or replacing components or performing upgrades.

Warning **Statement 1046—**Installing or Replacing the Unit

To reduce risk of electric shock, when installing or replacing the unit, the ground connection must always be made first and disconnected last.

Warning **Statement 1022—**Disconnect Device

To reduce risk of electric shock and fire, a readily accessible two-poled disconnect device must be incorporated in the fixed wiring.

Warning **Statement 1033—**Safety Extra-Low Voltage (SELV)—IEC 60950/ES1–IEC 62368 DC Power Supply

To reduce risk of electric shock, connect the unit only to a DC power source that complies with the SELV requirements in IEC 60950-based safety standards or ES1 requirements in IEC 62368-based safety standards.

Warning **Statement 1024—**Ground Conductor

This equipment must be grounded. To reduce the risk of electric shock, never defeat the ground conductor or operate the equipment in the absence of a suitably installed ground conductor. Contact the appropriate electrical inspection authority or an electrician if you are uncertain that suitable grounding is available.

Warning **Statement 1252**—Equipment Grounding

This equipment must be grounded. To reduce the risk of electric shock, the power cord, plug, or combination must be connected to a properly grounded electrode, outlet, or terminal.

Warning **Statement 1032**—Lifting the Chassis

To prevent personal injury or damage to the chassis, never attempt to lift or tilt the chassis using the handles on modules, such as power supplies, fans, or cards. These types of handles are not designed to support the weight of the unit.

Warning **Statement 1006**—Chassis Warning for Rack-Mounting and Servicing

To prevent bodily injury when mounting or servicing this unit in a rack, you must take special precautions to ensure that the system remains stable. The following guidelines are provided to ensure your safety:

- This unit should be mounted at the bottom of the rack if it is the only unit in the rack.
- When mounting this unit in a partially filled rack, load the rack from the bottom to the top with the heaviest component at the bottom of the rack.
- If the rack is provided with stabilizing devices, install the stabilizers before mounting or servicing the unit in the rack.

Installation Options with Rack-Mount Kits

The rack-mount kit enables you to install the switch into racks of varying depths. You can position the switch with easy access to either the port connections or the fan and power supply modules.

You can install the switch using the following rack-mount options:

- Rack-mount kit (NXK-ACC-KIT-1RU) which you can order from Cisco. This option offers you easy installation, greater stability, increased weight capacity, added accessibility, and improved removability with front and rear removal.
- Rack-mount kit (N3K-C3064-ACC-KIT) which you can order from Cisco.

The rack or cabinet that you use must meet the requirements listed the in General Requirements for Cabinets and Racks, on page 47 section.

Note You are responsible for verifying that your rack and rack-mount hardware comply with the guidelines that are described in this doc.

Airflow Considerations

The switch comes with fan and power supply modules that have either port-side intake or port-side exhaust airflow for cooling the switch. If you are positioning the port end of the switch in a cold aisle, make sure that the switch has port-side intake fan modules with burgundy coloring. If you are positioning the fan and power supply modules in a cold aisle, make sure that the switch has port-side exhaust fan modules with blue colorings. All fan modules must have the same direction of airflow.

Installation Guidelines

When installing the switch, follow these guidelines:

- Ensure that there is adequate clearance space around the switch to allow for servicing the switch and for adequate airflow.
- Ensure that you are positioning the switch in a rack so that it takes in cold air from the cold aisle and exhausts air to the hot aisle. If there is blue coloring on the fan modules, the switch is configured for port-side exhaust airflow and you must position the module side of the switch in a cold aisle. If there is burgundy coloring on the fan modules, the switch is configured for port-side intake airflow and you must position the port side of the switch in a cold aisle.
- Ensure that the chassis can be adequately grounded. If the switch is not mounted in a grounded rack, we recommend connecting the system ground on the chassis directly to an earth ground.
- Ensure that the site power meets the power requirements for the switch. If available, you can use an uninterruptible power supply (UPS) to protect against power failures.

Caution Avoid UPS types that use ferroresonant technology. These UPS types can become unstable with the switch, which can have substantial current draw fluctuations because of fluctuating data traffic patterns.

- Ensure that circuits are sized according to local and national codes. Typically, this often requires one or both of the following:
  - AC power supplies typically require at least a 15-A or 20-A AC circuit, 100 to 240 VAC, and a frequency of 50 to 60 Hz.
  - DC power supplies require the following:
    - DC input voltage range of –48 to -60 VDC nominal (self-ranging, –40 to –60 VDC)
    - DC line input current (steady state) of 23 A peak at –48 VDC

Caution To prevent loss of input power, ensure the total maximum loads on the circuits supplying power to the switch are within the current ratings for the wiring and breakers.

Note For AC input application, please refer to the statement below:

Warning **Statement 1005—**Circuit Breaker

This product relies on the building's installation for short-circuit (overcurrent) protection. Ensure that the protective devices is rated not greater than 20A (North America), 16A (Europe), and 13A (UK).

Note For DC input application, please refer to the statement below:

Warning **Statement 1005—**Circuit Breaker

This product relies on the building's installation for short-circuit (overcurrent) protection. Ensure that the protective devices is rated not greater than 40A for the regular DC power supplies (rated 48-60VDC) and 10A for the HVDC power supplies.

Unpacking and Inspecting the Switch

Before you install the switch, be sure to unpack and inspect the switch for damage or missing components. If anything is missing or damaged, contact your customer service representative immediately.

Tip Keep the shipping container in case the chassis requires shipping at a later time.

Before you begin

Before you unpack the switch and before you handle any switch components, be sure that you are wearing a grounded electrostatic discharge (ESD) strap. To ground the strap, attach it directly to an earth ground or to a grounded rack or grounded chassis (there must be a metal-to-metal connection to the earth ground).

Step 1 Compare the shipment to the equipment list provided by your customer service representative and verify that you have received all items, including the following:

- Accessory Kit

Step 2 Check for damage and report any discrepancies or damage to your customer service representative. Have the following information ready:

- Invoice number of shipper (see packing slip)

- Model and serial number of the damaged unit
- Description of damage
- Effect of damage on the installation

Step 3 Check to be sure that each of the power supply and the fan tray modules have the expected direction of airflow as follows:

- Port-side intake airflow modules
  - Burgundy (fan modules and AC power supplies)
  - Green (DC power supplies)
- Port-side exhaust airflow modules
  - Blue (fan modules and AC power supplies)
  - Gray (DC power supplies)

Note All power supplies and fan modules must have the same direction of airflow.

Installing the Switch Using the NXK-ACC-KIT-1RU Rack-Mount Kit

To install the switch, you must attach front and rear mounting brackets to the switch, install slider rails on the rear of the rack, slide the switch onto the slider rails, and secure the switch to the front of the rack. Typically, the front of the rack is the side easiest to access for maintenance.

Note You must supply the eight 10-32 or 12-24 screws required to mount the slider rails and switch to the rack.

Before you begin

- You have inspected the switch shipment to ensure that you have everything ordered.
- Make sure that the switch rack-mount kit includes the following parts:
  - Front rack-mount brackets (2)
  - Rear rack-mount brackets (2)
  - Slider rails (2)
  - M4 x 0.7 x 8-mm Phillips pan-head screws (10)
- The rack is installed and secured to its location.

Step 1 Install two front rack-mount brackets and the two rear rack-mount brackets to the switch as follows:

a) Determine which end of the chassis is to be located in the cold aisle as follows:

- If the switch has port-side intake modules (fan modules with burgundy coloring), position the switch so that its ports will be in the cold aisle.
- If the switch has port-side exhaust modules (fan modules with blue coloring), position the switch so that its fan and power supply modules will be in the cold aisle.

Note If the power supply modules have white coloring, look at the fan modules to determine the airflow direction for the switch.

b) Position the front rack-mount bracket and the rear rack-mount bracket so that its screw holes are aligned to the screw holes on the side of the chassis.

Note You can align the holes in the rack-mount bracket to the holes on the side of the chassis (see the two ways to mount these brackets on a typical chassis, in following figure). The holes that you use depend on the requirements of your rack and the amount of clearance required for interface cables (3 inches [7.6 mm] minimum) and module handles (1 inch [2.5 mm] minimum).

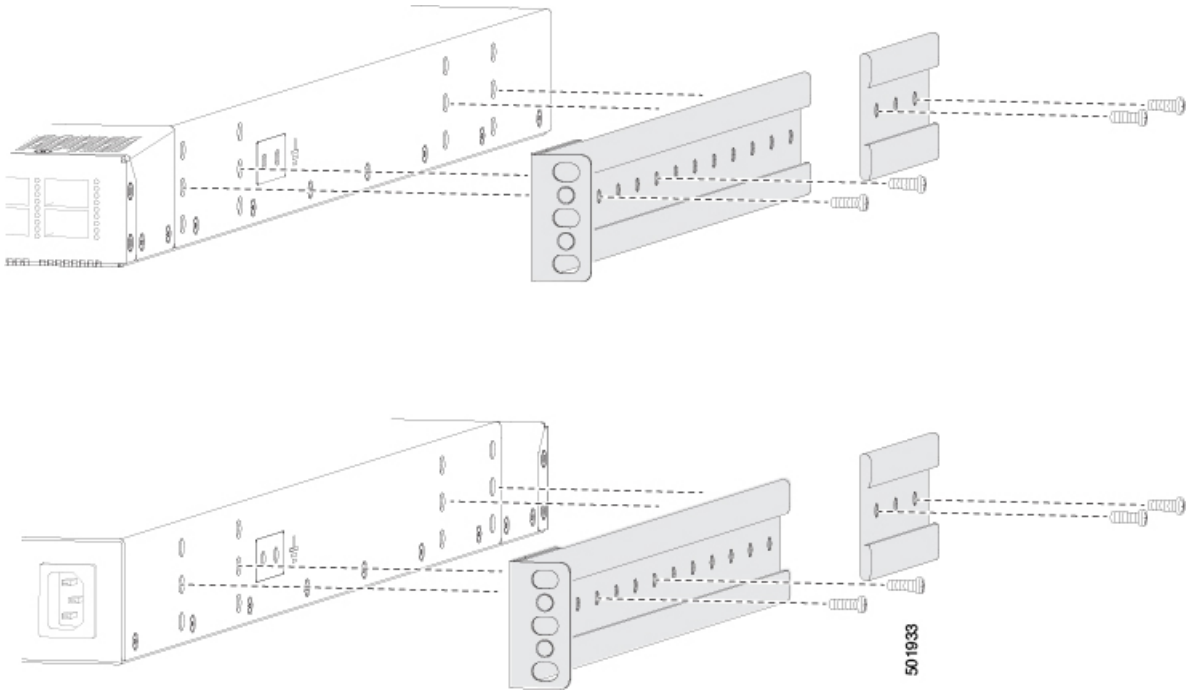

c) Secure the front-mount bracket and the back-mount bracket to the chassis using four M4 screws and tighten each screw to 12 in-lb (1.36 N·m) of torque.

d) Repeat Step 1 for the other front rack-mount bracket and the other back-mount bracket on the other side of the switch and be sure to position that bracket the same distance from the front of the switch.

Note Depending on the chassis depth, the back rack-mount bracket may not fit. In that case the back rack-mount bracket is not needed.

Step 2 If you are not installing the chassis into a grounded rack, you must attach a customer-supplied grounding wire to the chassis as explained in the Grounding the Chassis, on page 27 section. If you are installing the chassis into a grounded rack, you can skip this step.

Step 3 Install the slider rails on the rack or cabinet as follows:

a) Determine which two posts of the rack or cabinet you should use for the slider rails. Of the four vertical posts in the rack or cabinet, two will be used for the front mount brackets attached to the easiest accessed end of the chassis, and the other two posts will have the slider rails.

b) Position a slider rail at the desired level on the back side of the rack and use 12-24 screws or 10-32 screws, depending on the rack thread type, to attach the rails to the rack (see the following figure). Tighten 12-24 screws to 30 in-lb (3.39 N·m) of torque and tighten 10-32 screws to 20 in-lb (2.26 N·m) of torque.

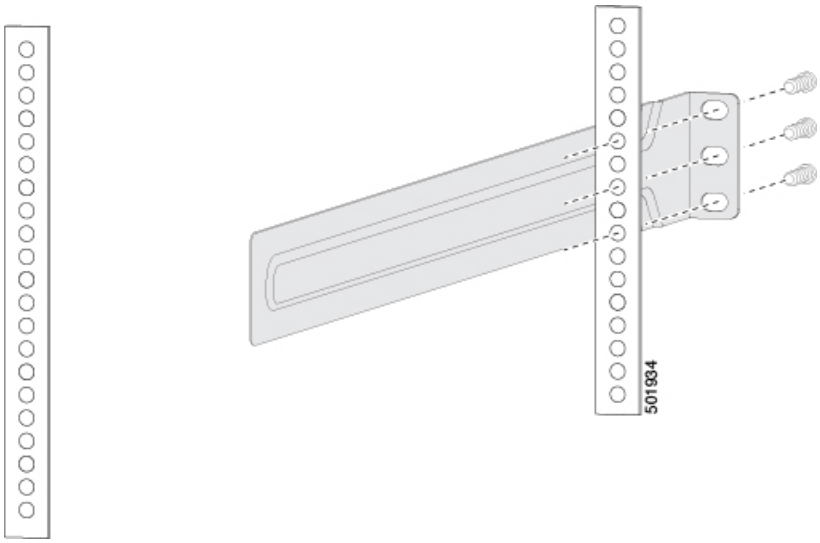

c) Repeat Step 3 to attach the other slider rail to the other side of the rack.

To make sure that the slider rails are at the same level, you should use a level tool, tape measure, or carefully count the screw holes in the vertical mounting rails.

Step 4 Insert the switch into the rack and attach it as follows:

a) Holding the switch with both hands, position the two rear rack-mount brackets on the switch between the rack or cabinet posts that do not have slider rails attached to them (see the following figure).

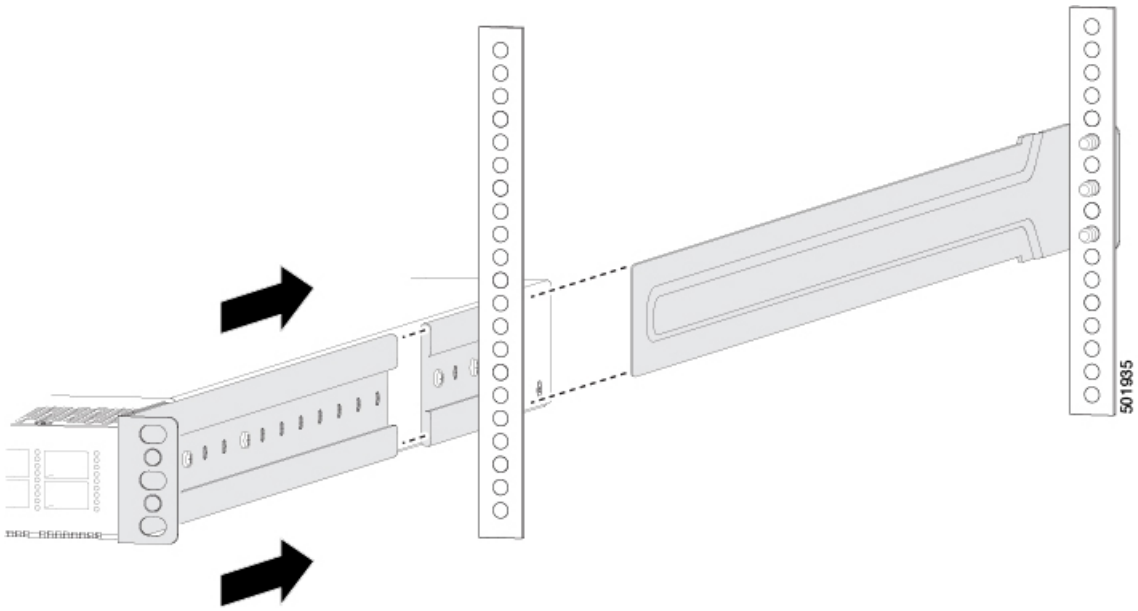

b) Align the two rear rack-mount guides on either side of the switch with the slider rails installed in the rack. Slide the rack-mount guides onto the slider rails, and then gently slide the switch all the way into the rack until the front rack-mount brackets come in contact with two rack or cabinet posts.

Note If you attached a grounding cable to the chassis, you will need to bend one of the rack-mount rails slightly to allow the grounding lug to go behind the rail.

c) Holding the chassis level, insert screws (12-24 or 10-32, depending on the rack type) in each of the two front rack-mount brackets (using a total of six screws) and into the cage nuts or threaded holes in the vertical rack-mounting rails (see the following figure).

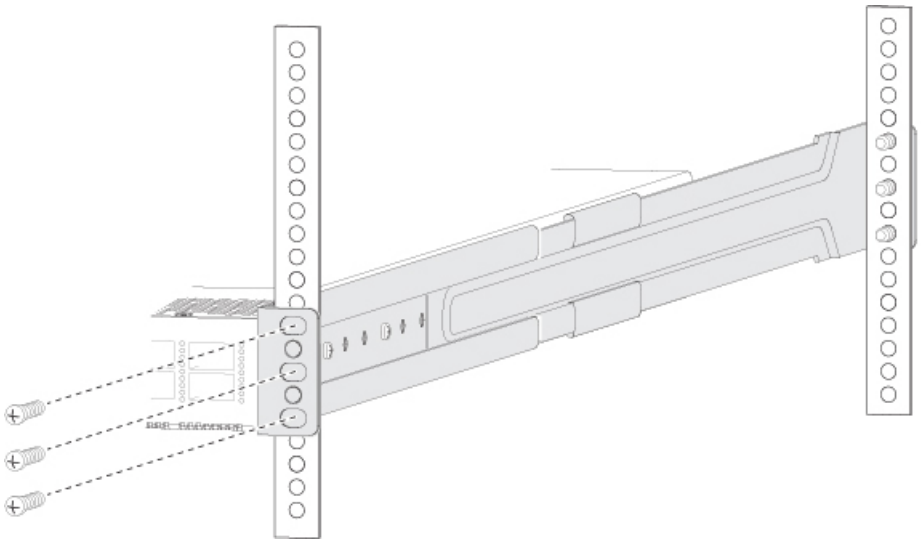

d) Tighten the 10-32 screws to 20 in-lb (2.26 N·m) or tighten the 12-24 screws to 30 in-lb (3.39 N·m).

Step 5 If you attached a grounding wire to the chassis grounding pad, connect the other end of the wire to the facility ground.

Installing the Switch Using the N3K-C3064-ACC-KIT Rack-Mount Kit

To install the switch, you must attach front and rear mounting brackets to the switch, install slider rails on the rear of the rack, slide the switch onto the slider rails, and secure the switch to the front of the rack. Typically, the front of the rack is the side easiest to access for maintenance.

Note You must supply the eight 10-32 or 12-24 screws required to mount the slider rails and switch to the rack.

Before you begin

- You have inspected the switch shipment to ensure that you have everything ordered.
- Make sure that the switch rack-mount kit includes the following parts:
  - Front rack-mount brackets (2)
  - Rear rack-mount brackets (2)
  - Slider rails (2)
  - M4 x 0.7 x 8-mm Phillips countersink screws (12)
- The rack is installed and secured to its location.

Step 1 Install two front-mount brackets to the switch as follows:

a) Determine which end of the chassis is to be located in the cold aisle as follows:

- If the switch has port-side intake modules (fan modules with burgundy coloring), position the switch so that its ports will be in the cold aisle.
- If the switch has port-side exhaust modules (fan modules with blue coloring), position the switch so that its fan and power supply modules will be in the cold aisle.

Note If the power supply modules have white coloring, look at the fan modules to determine the airflow direction for the switch.

b) Position a front-mount bracket so that four of its screw holes are aligned to the screw holes on the side of the chassis.

Note You can align any four of the holes in the front rack-mount bracket to four of the six screw holes on the side of the chassis (see the two ways to mount these brackets on a typical chassis, in following figure). The holes that you use depend on the requirements of your rack and the amount of clearance required for interface cables (3 inches [7.6 mm] minimum) and module handles (1 inch [2.5 mm] minimum).

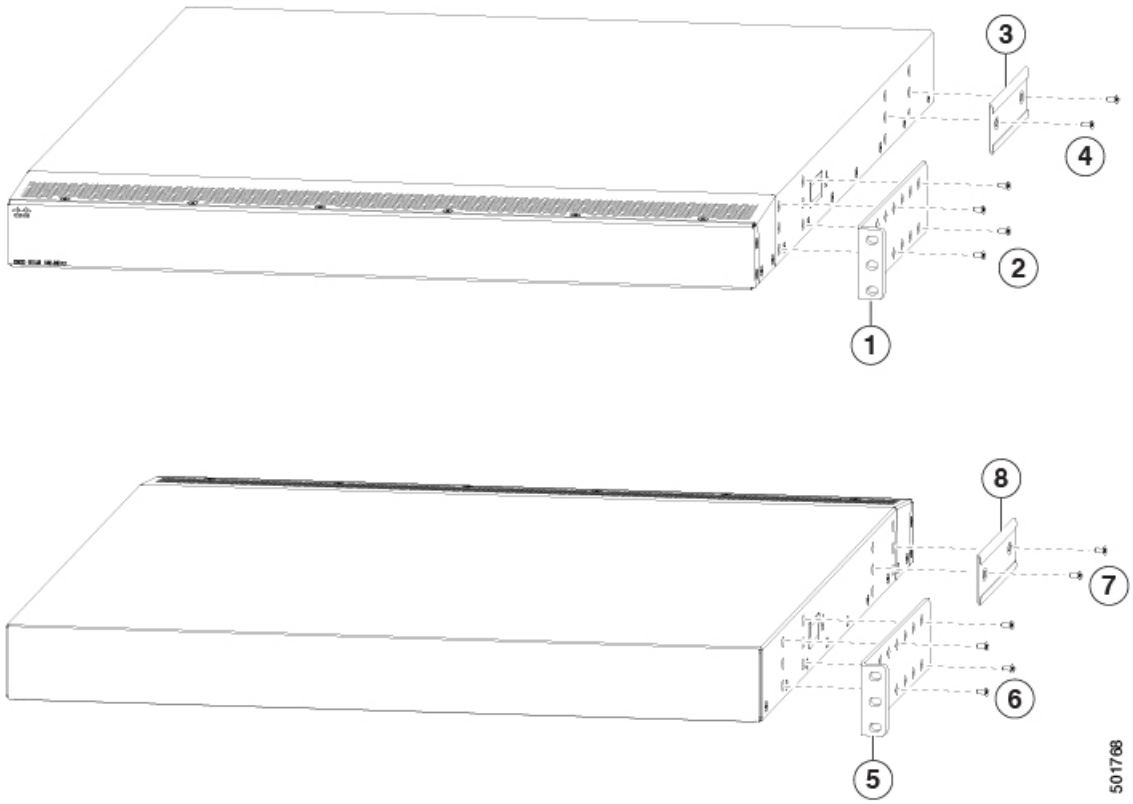

1	Front rack-mount bracket aligned to the port end of the chassis	5	Front rack-mount bracket aligned to the module end of the chassis
2	Four M4 screws used to attach the bracket to the chassis	6	Four M4 screws used to attach the bracket to the chassis
3	Rear rack-mount guide aligned to the module end of the chassis	7	Two M4 screws used to attach the bracket to the chassis
4	Two M4 screws used to attach the bracket to the chassis	8	Rear rack-mount guide aligned to the port end of the chassis

c) Secure the front-mount bracket to the chassis using four M4 screws and tighten each screw to 12 in-lb (1.36 N·m) of torque.

d) Repeat Step 1 for the other front rack-mount bracket on the other side of the switch and be sure to position that bracket the same distance from the front of the switch.

Step 2 Install the two rear rack-mount brackets on the chassis as follows:

a) Align the two screw holes on a rear rack-mount bracket to the middle two screw holes in the remaining six screw holes on a side of the chassis. If you are aligning the guide to holes that are near the port connections end of the chassis, see Callout 3 in the previous figure. Otherwise, see Callout 7 in the previous figure.

b) Attach the guide to the chassis using two M4 screws (see Callout 4 or 8 in the previous figure). Tighten the screws to 12 in-lb (1.36 N·m) of torque.

c) Repeat Step 2 for the other rear rack-mount bracket on the other side of the switch.

Step 3 If you are not installing the chassis into a grounded rack, you must attach a customer-supplied grounding wire to the chassis as explained in the Grounding the Chassis, on page 27 section.. If you are installing the chassis into a grounded rack, you can skip this step.

Step 4 Install the slider rails on the rack or cabinet as follows:

a) Determine which two posts of the rack or cabinet you should use for the slider rails. Of the four vertical posts in the rack or cabinet, two will be used for the front mount brackets attached to the easiest accessed end of the chassis, and the other two posts will have the slider rails.

b) Position a slider rail at the desired level on the back side of the rack and use two 12-24 screws or two 10-32 screws, depending on the rack thread type, to attach the rails to the rack (see the following figure). Tighten 12-24 screws to 30 in-lb (3.39 N·m) of torque and tighten 10-32 screws to 20 in-lb (2.26 N·m) of torque.

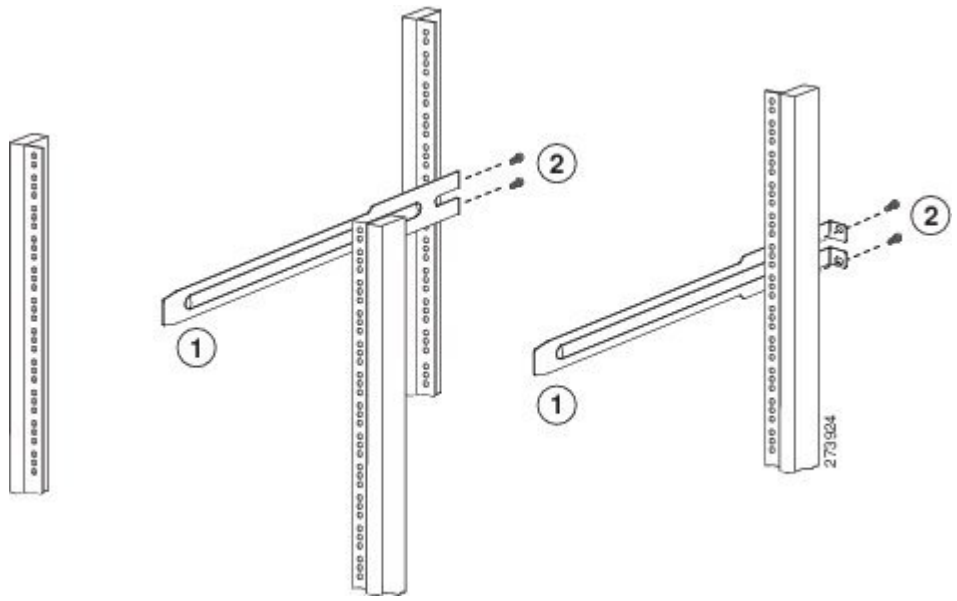

1	Slider rail with screw holes aligned to screw holes in rack	2	Two customer-supplied 12-24 or 10-32 screws used to attach each slider rail to the rack

c) Repeat Step 3 to attach the other slider rail to the other side of the rack.

To make sure that the slider rails are at the same level, you should use a level tool, tape measure, or carefully count the screw holes in the vertical mounting rails.

Step 5 Insert the switch into the rack and attach it as follows:

a) Holding the switch with both hands, position the two rear rack-mount brackets on the switch between the rack or cabinet posts that do not have slider rails attached to them (see the following figure).

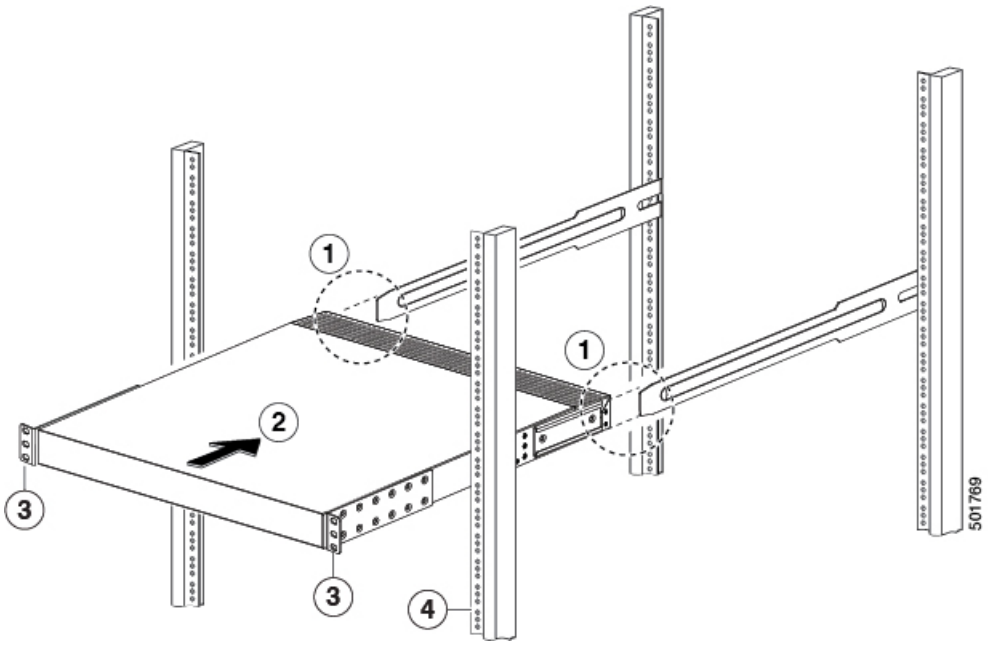

1	Align the two rear rack-mount bracket guides with the slider rails installed in the rack.	3	Front-mount brackets.
2	Slide the rack-mount guides onto the slider rails until the front rack-mount brackets come in contact with the front rack-mount rails.	4	Mounting rails on rack or cabinet posts.

b) Align the two rear rack-mount guides on either side of the switch with the slider rails installed in the rack. Slide the rack-mount guides onto the slider rails, and then gently slide the switch all the way into the rack until the front rack-mount brackets come in contact with two rack or cabinet posts.

Note If you attached a grounding cable to the chassis, you will need to bend one of the rack-mount rails slightly to allow the grounding lug to go behind the rail.

c) Holding the chassis level, insert two screws (12-24 or 10-32, depending on the rack type) in each of the two front rack-mount brackets (using a total of four screws) and into the cage nuts or threaded holes in the vertical rack-mounting rails (see the following figure).

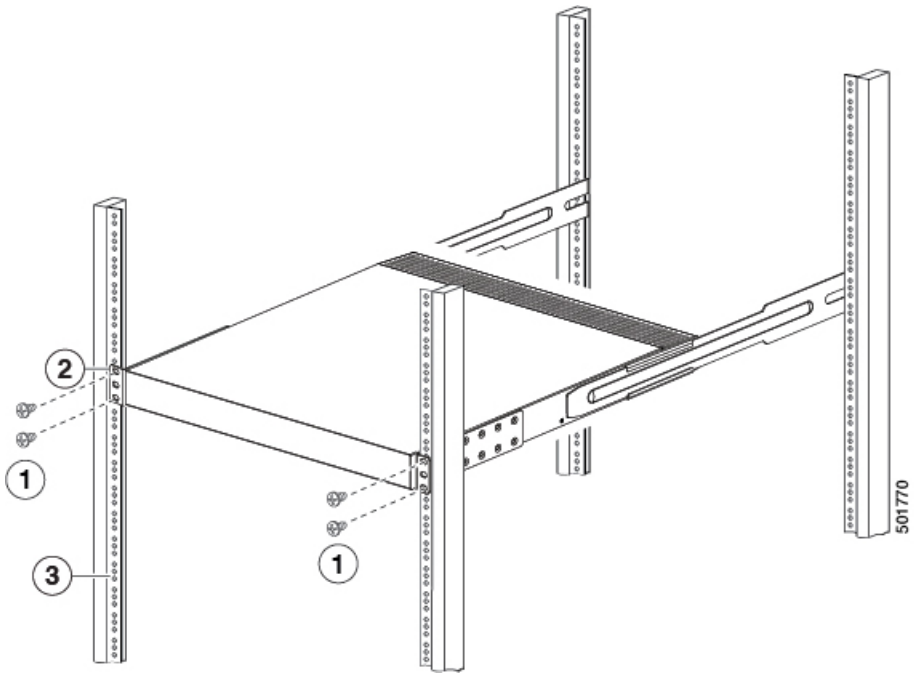

1	Fasten the chassis to the front of the rack with two 12-24 or 10-32 screws on each side.	3	Mounting rails on rack or cabinet posts.
2	Front-mount bracket.		

d) Tighten the 10-32 screws to 20 in-lb (2.26 N·m) or tighten the 12-24 screws to 30 in-lb (3.39 N·m).

Step 6 If you attached a grounding wire to the chassis grounding pad, connect the other end of the wire to the facility ground.

Grounding the Chassis

The switch chassis is automatically grounded when you properly install the switch in a grounded rack with metal-to-metal connections between the switch and rack.

Note An electrical conducting path shall exist between the product chassis and the metal surface of the enclosure or rack in which it is mounted or to a grounding conductor. Electrical continuity shall be provided by using thread-forming type mounting screws that remove any paint or non-conductive coatings and establish a metal-to-metal contact. Any paint or other non-conductive coatings shall be removed on the surfaces between the mounting hardware and the enclosure or rack. The surfaces shall be cleaned and an antioxidant applied before installation.

You can also ground the chassis, which is required if the rack is not grounded, by attaching a customer-supplied grounding cable. Attach the cable to the chassis grounding pad and the facility ground.

Warning **Statement 1024—**Ground Conductor

This equipment must be grounded. To reduce the risk of electric shock, never defeat the ground conductor or operate the equipment in the absence of a suitably installed ground conductor. Contact the appropriate electrical inspection authority or an electrician if you are uncertain that suitable grounding is available.

Warning **Statement 1046—**Installing or Replacing the Unit

To reduce risk of electric shock, when installing or replacing the unit, the ground connection must always be made first and disconnected last.

Before you begin

Before you can ground the chassis, you must have a connection to the earth ground for the data center building.

Step 1 Use a wire-stripping tool to remove approximately 0.75 inch (19 mm) of the covering from the end of the grounding wire. We recommend 6-AWG wire for the U.S. installations.

Step 2 Insert the stripped end of the grounding wire into the open end of the grounding lug. Use a crimping tool to crimp the lug to the wire, see the following figure. Verify that the ground wire is securely attached to the grounding lug by attempting to pull the wire out of the crimped lug.

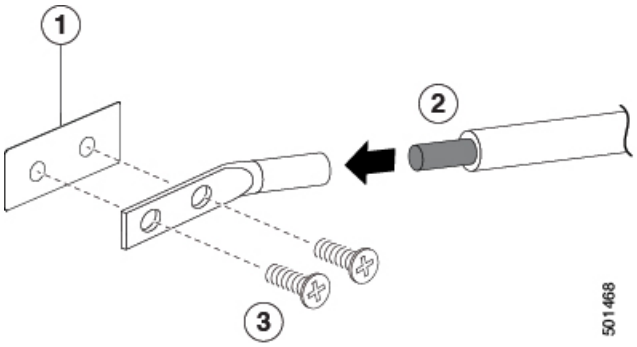

1	Chassis grounding pad	3	2 M4 screws are used to secure the grounding lug to the chassis
2	Grounding cable, with 0.75 in. (19 mm) of insulation that is stripped from one end, which is inserted into the grounding lug and crimped in place		

Step 3 Secure the grounding lug to the chassis grounding pad with two M4 screws, see the previous figure. Tighten the screws to 11 to 15 in-lb (1.24 to 1.69 N·m) of torque.

Step 4 Prepare the other end of the grounding wire and connect it to the facility ground.

Starting the Switch

You start the switch by connecting it to its dedicated power source. If you need *n*+1 redundancy, you must connect each of the power supplies to one or two power sources. If you need *n*+*n* redundancy, you must connect each power supply in a switch to a different power source.

Note This equipment is designed to boot up in less than 30 minutes, dependent on its neighboring devices being fully up and running.

Before you begin

- The switch must be installed and secured to a rack or cabinet.
- The switch must be adequately grounded.
- The rack must be close enough to the dedicated power source so that you can connect the switch to the power source by using a designated power cables.
- You have the designated power cables for the power supplies that you are connecting to the dedicated power sources.

Note Depending on the outlet receptacle on your AC power distribution unit, you might need an optional jumper power cord to connect the switch to your outlet receptacle.

- The switch is not connected to the network (this includes any management or interface connections).
- The fan and power supply modules are fully secured in their chassis slots.

Step 1 For each AC power supply, do the following:

a) Using the recommended AC power cable for your country or region, connect one end to the AC power supply.
b) Connect the other end of the power cable to the AC power source.

Step 2 For each HVAC/HVDC power supply, connect it to a power source as follows:

a) Using the recommended high voltage power cable for your country or region, connect the Anderson Power Saf-D-Grid connector on the power cable to the power receptacle on the power supply. Make sure that the connector clicks when fully pushed into the receptacle.
b) Connect the other end of the power cable to a power source.
   - When connecting to an HVAC power source, insert the C14 or LS-25 plug in a receptacle for the HVAC power source.
   - When connecting to an HVDC power source, do the following:
     1. Verify that the power is turned off at a circuit breaker for the power source terminals.
     2. Remove the nuts from each of the terminal posts for the power supply.

3. Place the power cable negative-wire terminal ring on the negative terminal for the power source and secure them with a terminal nut.
4. Place the power cable positive-wire terminal ring on the positive terminal for the power source and secure them with a terminal nut.
5. Place the power cable ground-wire terminal ring on the ground terminal for the power source and secure them with a terminal nut.
6. If there is a safety cover for the power source terminals, place and secure it over the terminals to avoid an electrical shock hazard.
7. Turn on the power at the power source circuit breaker.

Step 3 For each DC power supply, do the following:

a) Turn off the circuit breaker for the power source to avoid an electrical shock hazard.
b) Verify that the power cable wires from the power source are connected to a connector block.
c) Insert the connector block into the receptacle on the power supply. Make sure that the connector block clicks when fully inserted in the receptacle and does not pull out.
d) If there is a safety cover for the terminals, place and secure it over the terminals to avoid an electrical shock hazard.
e) Turn on the power at the circuit breaker for the DC power source.

Step 4 Verify that the power supply LED is on and green.

Step 5 Listen for the fans; they should begin operating when the power supply is powered.

Step 6 After the switch boots, verify that the following LEDs are lit:

- On the fan modules, the Status (STA or STS) LED is green.

  If a fan module Status LED is not green, try reinstalling the fan module.

- After initialization, the switch chassis Status (labeled as STA or STS) LED is green.

Step 7 Verify that the system software has booted and the switch has initialized without error messages.

A setup utility automatically launches the first time that you access the switch and guides you through the basic configuration. For instructions on how to configure the switch and check module connectivity, see the appropriate Cisco Nexus 9000 Series configuration guide.

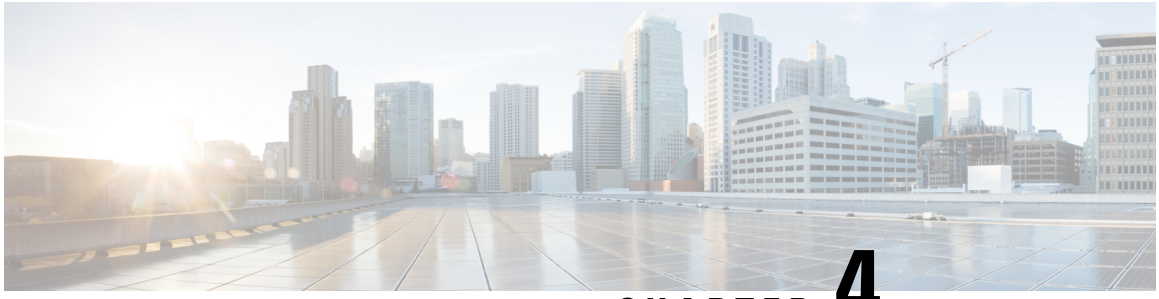

CHAPTER 4

Connecting the Switch to the ACI Fabric

- ACI Fabric Topology, on page 31
- Preparing to Connect to Other Devices, on page 32
- Connecting Leaf Switches to APICs, on page 33
- Connecting Leaf Switches to Spine Switches, on page 35
- Installing a Gigabit Ethernet module (GEM), on page 36
- Migration of Nodes From a First Generation Switch to a Second Generation Switch, on page 36
- Setting Up an Optional Console Interface, on page 38
- Setting Up an Optional Management Connection, on page 39
- Maintaining Transceivers and Optical Cables, on page 39

ACI Fabric Topology

The ACI fabric topology includes the following major components:

- Application Centric Infrastructure Controller (APIC) appliance (cluster of APICs)
- Leaf switches (for switch compatibility, please see the data sheets).
- Spine switches (for switch compatibility, please see the data sheets).

For additional information, please see the Cisco APIC Installation, Upgrade, and Downgrade Guide.

Note To prevent sub-optimal forwarding between endpoints, connect every leaf switch in the fabric to every spine switch in the same fabric.

As shown in the following figure, each APIC is connected to one or two leaf switches and each leaf switch should be connected to every spine switch in the same fabric.

Figure 1: Connections Between APIC Clusters, Leaf Nodes, and Spine Nodes

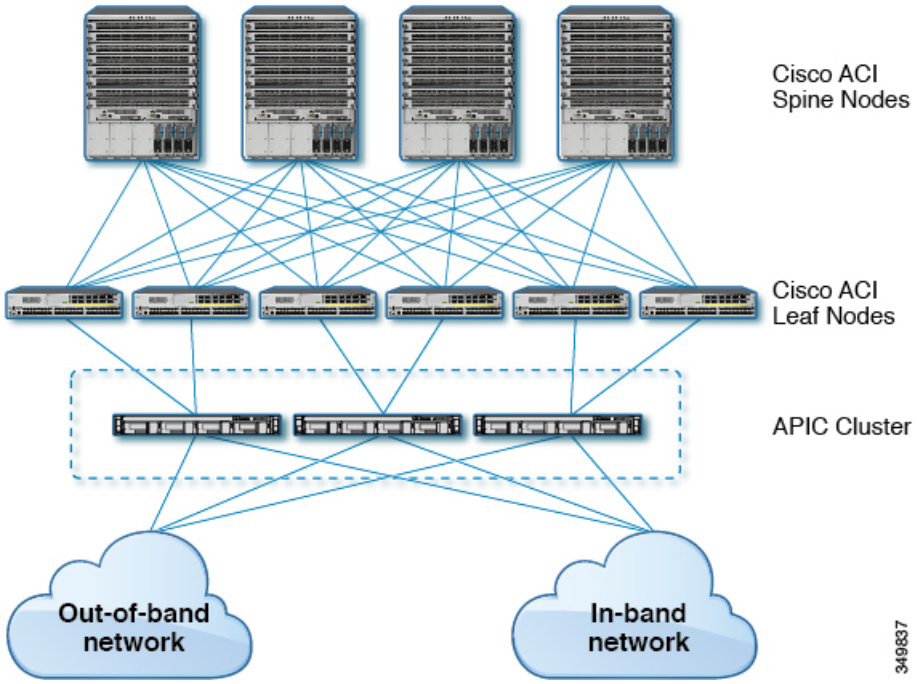

Preparing to Connect to Other Devices

When preparing to connect the fabric devices, consider the following for each type of interface, and gather all of the required equipment before making the connections:

- Cabling type required for each interface type
- Distance limitations for each signal type
- Additional interface equipment required

Note When running power and data cables in overhead or subfloor cable trays, we strongly recommend that you locate power cables and other potential noise sources as far away as practical from network cabling that terminates on Cisco equipment. In situations where long parallel cable runs cannot be separated by at least 3.3 feet (1 meter), we recommend that you shield any potential noise sources by housing them in a grounded metallic conduit.

The optical transceivers that are not already assembled to their cables come separate from their cables. To prevent these transceivers and their cables from being damaged, we recommend that you keep the transceivers disconnected from their cables when installing them in ports and then insert the optical cable into the transceiver. When removing transceivers from ports, remove their cables before removing the transceivers.

To maximize the effectiveness and life of your transceivers and optical cables, do the following:

- Wear an ESD-preventative wrist strap that is connected to an earth ground whenever handling transceivers. The switch is typically grounded when you install transceivers and provides an ESD port to which you

can connect your wrist strap. If you cannot find an ESD port, connect the wrist strap to an earth ground (such as the grounding connection for the chassis).

- Do not remove or insert a transceiver more often than necessary. Repeated removals and insertions can shorten its useful life.
- Keep the transceivers and fiber-optic cables clean and dust free to maintain high signal accuracy and to prevent damage to the connectors. Attenuation (loss of light) increases with contamination and should be kept below 0.35 dB.
  - Clean these parts before installing them to prevent dust from scratching the fiber-optic cable ends.
  - Clean the connectors regularly; the required frequency of cleaning depends upon the environment. In addition, clean connectors if they are exposed to dust or accidentally touched. Both wet and dry cleaning techniques can be effective; refer to your site's fiber-optic connection cleaning procedures.
  - Do not touch the ends of connectors. Touching the ends can leave fingerprints and cause other contamination.
- Inspect routinely for dust and damage. If you suspect damage, clean and then inspect fiber ends under a microscope to determine if damage has occurred.

Connecting Leaf Switches to APICs

You must downlink one or two (recommended for redundancy) Cisco Nexus 9300 platform ACI-mode leaf switches to each Application Policy Infrastructure Controller (APIC) in your ACI fabric. The type of virtual interface card (VIC) installed on the APIC determines the types of interface cables that you can use to connect the leaf switches to the APICs.

- The **VIC 1225T** module supports copper connectors, copper cables, and switches with copper downlink ports (such as: Cisco Nexus 93108TC-FX switche).
- The **VIC 1225** module supports optical transceivers, optical cables, and switches with optical downlink ports (such as: Cisco Nexus 93600CD-GX switche).
- The **VIC 1455** module supports optical transceivers, optical cables, and switches with optical downlink ports (such as: Cisco Nexus 93600CD-GX switche).

Note Breakout ports cannot be used for Cisco APIC connectivity.

Before you begin

The APIC and leaf switches in the fabric must be fully installed in their racks and grounded.

Step 1 Connect an interface cable to one of the two to four ports on the virtual interface card (VIC) installed on the APIC. If the cable is not already assembled to its transceivers, insert the transceiver into the VIC port and then connect the optical interface cable to the transceiver.

- For a **VIC 1225T** 10GBASE-T copper module, use 10GBASE-T cables with RJ-45 connectors.

- For a **VIC 1225** optical module, use one of the following sets of transceivers and cables:
  - Cisco 10GBASE-LR transceivers (SFP-10G-LR) supporting a link length of up to 6.1 miles (10 km)
  - Cisco 10GBASE-SR transceivers (SFP-10G-SR) supporting the following link lengths:
    - Using 2000 MHz MMF (OM3) for up to 984 feet (300 m)
    - Using 4700 MHz MMF (OM4) for up to 1312 feet (400 m)
  - Cisco SFP+ Active Optical Cables (SFP-10G-AOC*x*M [where *x*=1, 3, 5, 7 for lengths in meters])
  - Cisco SFP+ Twinax Cables (SFP-H10GB-CU*x*M [where *x*=7 for lengths in meters])
- For a **VIC 1455** SFP28 module, 10-Gigabit only, use one of the following sets of transceivers and cables:
  - Cisco 10GBASE-LR transceivers (SFP-10G-LR) supporting a link length of up to 6.1 miles (10 km)
  - Cisco 10GBASE-SR transceivers (SFP-10G-SR) supporting the following link lengths:
    - Using 2000 MHz MMF (OM3) for up to 984 feet (300 m)
    - Using 4700 MHz MMF (OM4) for up to 1312 feet (400 m)
  - Cisco SFP+ Active Optical Cables (SFP-10G-AOC*x*M [where *x*=1, 2, 3, 5, 7, or 10 for lengths in meters])
  - Cisco SFP+ Twinax Cables (SFP-H10GB-CU*x*M [where *x*=1, 2, 3, 5, 7, or 10 for lengths in meters])

Note The VIC 1455 has 4 ports, port-1, port-2, port-3, and port-4 from left to right.

- All ports must have the same speed, either 10-Gigabit or 25-Gigabit.
- Port-1 and port-2 is one pair, corresponding to eth2-1 on APIC and port-3 and port-4 is another pair, corresponding to eth2-2 on APIC. Only one connection is allowed for each pair. For example, you can connect one cable to either port-1 or port-2, and connect another cable to either port-3 or port-4 (**please do not connect two cables on any pair**).

To determine which transceivers, adapters, and cables support this switch, see the Cisco Transceiver Modules Compatibility Information document.

To see the transceiver specifications and installation information, see Transceiver Module Installation Guides.

Step 2 Connect the other end of the interface cable to a downlink port on a leaf switch.

- For a Cisco 10GBASE-LR or -SR transceiver and cable, insert the transceiver into a downlink optical port on a leaf switch before connecting the cable to the transceiver.
- For Cisco SFP+ Active Optical Cables, insert the transceiver on the cable into a downlink optical port on a leaf switch.
- For a 10GBASE-T copper cable, insert the RJ-45 connector on the cable into a downlink BASE-T port on a leaf switch.

Note To determine which transceivers, adapters, and cables support this switch, see the Cisco Transceiver Modules Compatibility Information document.

Connecting Leaf Switches to Spine Switches

For optimal forwarding between endpoints, you must connect each leaf switch to every spine switch in the same ACI fabric.

To determine which transceivers, adapters, and cables support this switch, see the Cisco Transceiver Modules Compatibility Information document.

To see the transceiver specifications and installation information, see Transceiver Module Installation Guides.

Warning **Statement 1055—**Class 1/1M Laser

Invisible laser radiation is present. Do not expose to users of telescopic optics. This applies to Class 1/1M laser products.

Warning **Statement 1056—**Unterminated Fiber Cable

Invisible laser radiation may be emitted from the end of the unterminated fiber cable or connector. Do not view directly with optical instruments. Viewing the laser output with certain optical instruments, for example, eye loupes, magnifiers, and microscopes, within a distance of 100 mm, may pose an eye hazard.

Before you begin

- The leaf and spine switches in the fabric (such as: N9k-C9364C, N9K-C9332C, N9K-C9316D-GX, and N9K-C9332D-GX2B) must be fully installed in their racks and grounded.
- If there are modular switches in the fabric, their ACI-mode line cards must already be installed. The line cards can be of the following types:
  - 32-port 100-Gigabit (such as: N9K-X9732C-EX)
  - 36-port 100-Gigabit (such as: N9K-X9736C-FX)
  - 16-port 400-Gigabit (such as: N9K-X9716D-GX)

Note You cannot include NX-OS line cards in the same chassis when running in ACI mode.

Note Multiple uplinks from a leaf switch to a spine switch is supported. A symmetrical topology is recommended so that all devices have equal access to resources.

Step 1 For the transceivers with removable cables, make sure that the transceivers are separated from their interface cables.

Step 2 Insert the appropriate transceiver into an active uplink port on the leaf switch.

Step 3 Insert the same type of transceiver in the spine switch port on the line card.

Step 4 For transceivers with removable cables, insert the interface cable into the open end of each of those transceivers.

Step 5 Repeat Steps 1 through 4 for each spine switch in the ACI fabric.
The leaf switch is connected to each spine switch in the ACI fabric.

Step 6 Repeat Steps 1 through 5 for each leaf switch in the ACI fabric.
Each leaf switch in the ACI fabric is connected to each spine switch in the network,

The fabric automatically implements Equal Cost Multi-Pathing (ECMP) and enables all links. You do not need to configure the links.

Installing a Gigabit Ethernet module (GEM)

Step 1 Clear the switch's current configuration by using the `setup-clean-config` command.

Step 2 Power off the switch by disconnecting the power.

Step 3 Replace the current GEM card with the new GEM card.

Step 4 Power on the switch.

Migration of Nodes From a First Generation Switch to a Second Generation Switch

You have first generation Cisco Nexus 9000 series switches that may or may not be comprising a virtual port channel (vPC). You are migrating to second generation Cisco Nexus 9000 series switches using the same cables.

First generation Cisco Nexus 9000 series switches include those switches that do not contain -EX, -FX, or -GX in the product ID.

Second generation Cisco Nexus 9000 series switches include those switches that have the -EX, -FX, -GX, or later suffix in the product ID.

To migrate the first generation switches to second generation switches, you must perform the steps in this procedure.

To determine which transceivers, adapters, and cables support this switch, see the Cisco Transceiver Modules Compatibility Information document.

To see the transceiver specifications and installation information, see Transceiver Module Installation Guides.

Before you begin

- Move any Cisco Application Policy Infrastructure Controllers (APICs) that are connected to the first generation switches that you are migrating to any other switches in the fabric and wait for the Cisco APIC cluster to become "Fully Fit."
- The following migration paths are supported:
  1. Migrating from first generation Cisco Application Centric Infrastructure (ACI) switches to second generation Cisco ACI switches that are running the same software release.
  2. Migrating from first generation Cisco ACI switches to second generation Cisco ACI switches that are running different software releases.

     The second migration path is required where the existing switches are not supported on the new release that is required for the new switches. For example, if you want to migrate from the first generation Cisco ACI switches, such as Cisco Nexus 9300 (with the -E suffix or without any suffixes in the product ID) that are no longer supported starting on Cisco ACI switch 15.0(1) or later releases, to some of the new switches that are supported only from 15.0(1) or later.

     When the first generation switches are comprising a vPC, complete the following mandatory prerequisite steps before you proceed with the second migration path:

     a. Due to potential traffic loss, it is recommended that that you perform the vPC migration during a maintenance window.

     b. Before you perform this procedure, the Auto Firmware Update policy must be disabled.

     c. Upgrade the Cisco APIC cluster to the 4.2(7v) release if the cluster is running an older release. Also upgrade the first generation switches to the 14.2(7v) release. Wait for the fabric to converge.

     d. Upgrade the Cisco APIC cluster to 5.2(7f) release and wait for the cluster to become "Fully Fit."

     e. Ensure that the new second generation switches are preloaded and running the equivalent release as the Cisco APICs, that is 15.2(7f) release. Other than source and target version software releases 4.2(7v)/14.2(7v) and 5.2(7f)/15.2(7f), no other software releases are supported for this migration procedure.

Note

- The number of ports and port types of the second generation switches must match the first generation switch that you are replacing. If the number does not match, then you must change the configuration to accommodate the new ports or port types. This is also applicable if you migrate the hardware while retaining the same software version.
- To migrate first generation non-vPC leaf switches or first generation spine switches to second generation switches, follow Step 1, on page 38 through Step 6, on page 38 in the procedure outlined below. vPC-related information is not applicable for this migration.

  If you must migrate a first generation non-vPC leaf switch or a first generation spine switch to a second generation switch, the requirement of the source and target software release 4.2(7v)/14.2(7v) and 5.2(7f)/15.2(7f) is not required. Ensure that the Cisco ACI fabric is running the required software release that supports the second generation switch PID.

Step 1 From the Cisco APIC GUI, perform the **Remove From Controller** operation for the operational secondary vPC switch node.

The Cisco APIC clean reboots the switch. Wait for about 10 minutes for this operation to finish. This action prompts all traffic to use the other first generation switch for data traffic.

Note There will be a loss of traffic for a few seconds for the operational secondary vPC when you perform the **Remove From Controller** operation.

Step 2 Disconnect the cabling from the first generation switch that you just removed.

Step 3 Uninstall the first generation switch by reversing the order of the steps in the "Installing the Switch Chassis" section of the switch-specific *Hardware Installation Guide*.

Step 4 Install the second generation switch by following the steps in the "Installing the Switch Chassis" section of the switch-specific *Hardware Installation Guide*.

Step 5 Connect the loose cabling that you removed from the first generation switch to the same ports on the second generation switch.

Step 6 Register the new second generation switch with the Cisco APIC.

Register the new node with the same node name and node ID. This switch becomes part of the fabric. The Cisco APIC pushes the policies to the new switch and keeps down the vPC legs because there is a mismatch of the generation of switches. At this point, the vPC primary continues to send the data traffic.

Step 7 Before you proceed to Step 8, on page 38, wait for 10 to 15 minutes for the new switch to download the configurations.

Step 8 From the Cisco APIC GUI, perform the **Remove From Controller** operation for the vPC primary. The Cisco APIC clean reboots the switch.

Wait for about 10 minutes for this operation to finish. The vPC leg on the second generation switch, which the Cisco APIC kept down earlier, comes up. This action prompts all traffic to move to the new second generation switch. The vPC ports on the new second generation switch can take a few minutes to come up, during which time there will be traffic drops. The duration of traffic drops varies by the scale and flows in the fabric.

Step 9 Disconnect the cabling from the first generation switch.

Step 10 Uninstall the first generation switch as you did in Step 3, on page 38.

Step 11 Install the second generation switch as you did in Step 4, on page 38.

Step 12 Connect the loose cabling as you did in Step 5, on page 38.

Step 13 Register the new second generation switch with the Cisco APIC.

Register the new node with the same node name and node ID. This switch becomes part of the fabric. The Cisco APIC pushes policies to the new switch and the vPC legs comes up and starts passing traffic.

Setting Up an Optional Console Interface

You can optionally set up a console interface for performing the initial configuration of the switch. To do this, use the interface cable provided in the accessory kit to connect the switch to your console device. You can connect the console port on the switch to a modem. If you do not connect it to a modem, make the connection either before powering up the switch or after completing the boot process for the switch.

Before you begin

The console device must support VT100 terminal emulations and asynchronous transmissions.

Step 1 Configure the terminal emulator program to match each of the following default port characteristics:

- 9600 baud
- 8 data bits
- 1 stop bit
- No parity

Step 2 Insert the RJ-45 connector on the interface cable found in the accessory kit into the RS-232 port on the switch and insert the DB-9 connector on the other end of the cable to the serial port on the console device.

What to do next

You can now perform the initial configuration for the switch (see the *Cisco ACI Getting Started Guide*).

Setting Up an Optional Management Connection

You can optionally set up an out-of-band management connection for monitoring and troubleshooting purposes. To do this, depending on your switch, you connect either the RJ-45 management port or the SFP management port on the switch to an external hub, switch, or router.

Before you begin

To prevent an IP address conflict, you must complete the initial configuration for the switch and establish an IP address before you create the management connection.

Step 1 Connect the interface cable to a management port on the switch.

Step 2 Connect the other end of the cable to an external hub, switch, or router.

Maintaining Transceivers and Optical Cables

Transceivers and fiber-optic cables must be kept clean and dust free to maintain high signal accuracy and prevent damage to the connectors. Contamination increases attenuation (loss of light) and should be below 0.35 dB.

Consider the following maintenance guidelines:

- Transceivers are static sensitive. To prevent ESD damage, wear an ESD-preventative wrist strap that is connected to the grounded chassis.

- Do not remove and insert a transceiver more often than is necessary. Repeated removals and insertions can shorten its useful life.
- Keep all optical connections covered when not in use. Clean them before using to prevent dust from scratching the fiber-optic cable ends.
- Do not touch the ends of connectors. Touching the ends can leave fingerprints and cause other contamination.
- Clean the connectors regularly; the required frequency of cleaning depends upon the environment. In addition, clean connectors if they are exposed to dust or accidentally touched. Both wet and dry cleaning techniques can be effective; refer to the fiber-optic connection cleaning procedures for your site.
- Inspect routinely for dust and damage. If you suspect damage, clean and then inspect fiber ends under a microscope to determine if damage has occurred.

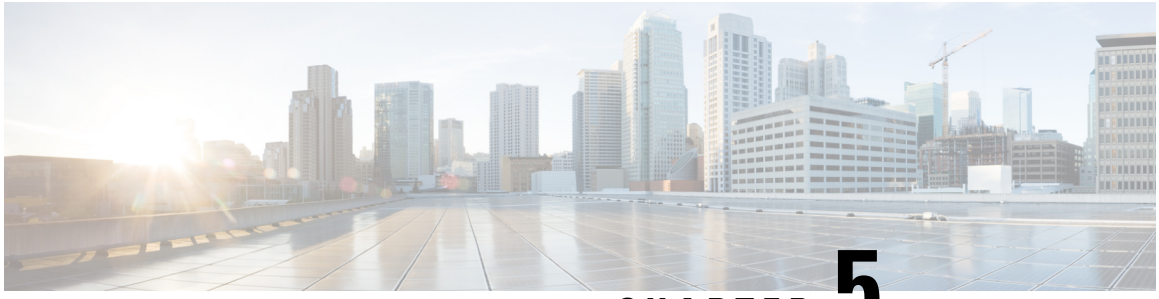

CHAPTER 5

Replacing Components

- Replacing a Fan Module, on page 41
- Replacing a Power Supply Module, on page 42

Replacing a Fan Module

You can replace a fan module while the switch is operating so long as you perform the replacement within one minute. If you cannot perform the replacement within one minute, leave the original fan module in the chassis to maintain the designed airflow until you have the replacement fan module on hand and can perform the replacement.

Caution If you are replacing a module during operations, be sure that the replacement fan module has the correct direction of airflow, which means that it has the same airflow direction as the other modules in the chassis. Also, be sure that the airflow direction takes in air from a cold aisle and exhausts to a hot aisle. Otherwise, the switch can overheat and shutdown.

If you are changing the airflow direction of all the modules in the chassis, you must shutdown the switch before replacing all the fan and power supply modules with modules using the other airflow direction. During operations, all of the modules must have the same direction of airflow.

Removing a Fan Module

Caution The fans might still be turning when you remove the fan assembly from the chassis. Keep fingers, screwdrivers, and other objects away from the openings in the fan assembly's housing.

Step 1 On the fan module that you are removing, press the two sides of the fan module handle together, and pull on the handles enough to unseat it from its connectors.

Step 2 Holding the handle, pull the module out of the chassis.

Caution Do not touch the electrical connectors on the back side of the module and prevent anything else from coming into contact with and damaging the connectors.

Installing a Fan Module

Before you begin

- A fan slot must be open and ready for the new fan module to be installed.
- You must have a new fan module on hand and ready to install within one minute of removing the original fan module if the switch is operating.
- The new fan module must have the same airflow direction as the other fan and power supply modules installed in the switch.

Step 1 Holding the fan module by its handle, align the back of the fan module (the side with the electrical connectors) to the open fan slot in the chassis.

Step 2 Slide the fan module into the slot until it clicks in place.

Step 3 Verify that the Status (STS) LED turns on and becomes green.

Replacing a Power Supply Module

The switch requires two power supplies for redundancy. With one power supply providing the necessary power for operations, you can replace the other power supply during operations so long as the new power supply has the same airflow direction as the other modules in the chassis.

You can replace a power supply with another supported power supply that has the same power source type as the other installed power supply. Additionally, the airflow direction of the power supply must match or conform to the airflow direction of the installed fan modules. For the airflow direction used by the switch, see the coloring of the fan modules.

Replacing an AC Power Supply

You can replace an AC power supply during operations so long as the other power supply provides to the switch.

Before you begin

Note You can determine the airflow direction by looking at the coloring of the latch on each power supply. AC power supplies with burgundy latches have port-side intake airflow direction, and power supplies with blue latches have port-side exhaust airflow direction.

- The replacement power supply must have the same wattage and airflow direction as the power supply being replaced. Do not mix AC, DC, HVAC/HVDC power supplies in the same switch.
- An AC power source must be within reach of the power cable that will be used with the replacement power supply. If you are using *n*+*n* power redundancy, there must be a separate power source for each power supply installed in the chassis.
- There must be an earth ground connection to the chassis that you are installing the replacement module. AC power supplies connected to AC power sources are automatically grounded through their power cable.

Step 1 Remove an AC power supply as follows:

a) Holding the plug for the power cable, pull the plug out from the power receptacle on the power supply and verify that both power supply LEDs are off.

b) Grasp the power supply handle while pressing the colored release latch towards the power supply handle.

c) Place your other hand under the power supply to support it while you slide it out of the chassis.

Caution Do not touch the electrical connections on the back side of the module and prevent anything else from coming into contact with and damaging the connectors.

Step 2 Install the replacement power supply as follows:

a) Holding the replacement power supply with one hand underneath the module and the other hand holding the handle, turn the power supply so that its release latch is on the right side and align the back end of the power supply (the end with the electrical connections) to the open power supply slot before carefully sliding the power supply all the way into the slot until it clicks into place.

Note If the power supply does not fit into the open slot, turn the module over before sliding it carefully into the open slot.

b) Test the installation by trying to pull the power supply out of the slot without using the release latch.

If the power supply does not move out of place, it is secured in the slot. If the power supply moves, carefully press it all the way into the slot until it clicks in place.

c) Attach the power cable to the electrical outlet on the front of the power supply.

d) Make sure that the other end of the power cable is attached to the appropriate power source for the power supply.

Note Depending on the outlet receptacle on your power distribution unit, you might need the optional jumper cable to connect the switch to your outlet receptacle.

e) Verify that the power supply is operational by making sure that the power supply LED is green.

Replacing a DC Power Supply

You can replace an DC power supply during operations so long as the other power supply provides power to the switch.

Before you begin

- The replacement power supply must have the same wattage and airflow direction as the power supply being replaced. Do not mix AC, DC, HVAC/HVDC power supplies in the same switch.

Note You can determine the airflow direction by looking at the coloring of the latch on each power supply. AC power supplies with burgundy latches have port-side intake airflow direction, and power supplies with blue latches have port-side exhaust airflow direction.

- An DC power source must be within reach of the power cables that will be used with the replacement power supply. If you are using *n*+*n* power redundancy, there must be a separate power source for each power supply installed in the chassis.
- There must be an earth ground connection to the chassis in which you are installing the replacement power supply. If the switch is mounted properly in a grounded rack then there is no need to ground the PSU. Some DC power supplies connected to DC power sources have three power cables (two for DC power and one for grounding). Some, like the (NXA-PDC-1100W) only have two power cables (both for DC power).
- We recommend 8-AWG wire for DC installation in the U.S.
- All DC power supplies have reverse polarity protection. When you inadvertently connect the input power (+) to the DC PSU's – terminal and the input power – to the DC PSU's (+) terminal, the PSU will not be damaged and will operate fine after the input power feeds are correctly wired.

Step 1 Remove a DC power supply as follows:

a) Turn off the circuit breaker for the power feed to the power supply that you are replacing.

Be sure that the LEDs turn off on the power supply that you are removing.

b) Remove the DC power connector block from the power supply by doing the following:

1. Push the orange plastic button on the top of the connector block inward toward the power supply.
2. Pull the connector block out of the power supply.

c) Grasp the power supply handle while pressing the release latch towards the power supply handle.

d) Place your other hand under the power supply to support it while you slide it out of the chassis.

Caution Do not touch the electrical connections on the back side of the module and prevent anything else from coming into contact with and damaging the connectors.

Step 2 Install the replacement power supply as follows:

a) Holding the replacement power supply with one hand underneath the module and the other hand holding the handle, turn the power supply so that its release latch is on the right side and align the back end of the power supply (the end with the electrical connections) to the open power supply slot before carefully sliding the power supply all the way into the slot until it clicks into place.

Note If the power supply does not fit into the open slot, turn the module over before sliding it carefully into the open slot.

b) Test the installation by trying to pull the power supply out of the slot without using the release latch.

   If the power supply does not move out of place, it is secured in the slot. If the power supply moves, carefully press it all the way into the slot until it clicks in place.

c) Attach the power connector block end of the power cable to the electrical outlet on the front of the power supply.
d) Turn on the circuit breaker for the power source.
e) Verify that the power supply is operational by making sure that the power supply LED is green.

APPENDIX A

Rack Specifications

- Overview of Racks, on page 47
- General Requirements for Cabinets and Racks, on page 47
- Requirements Specific to Standard Open Racks, on page 48
- Requirements Specific to Perforated Cabinets, on page 48
- Cable Management Guidelines, on page 48

Overview of Racks

You can install the switch in the following types of cabinets and racks, assuming an external ambient air temperature range of 0 to 104°F (0 to 40°C):

- Standard perforated cabinets
- Solid-walled cabinets with a roof fan tray (bottom to top cooling)
- Standard open racks

Note If you are selecting an enclosed cabinet, we recommend one of the thermally validated types, either standard perforated or solid-walled with a fan tray.

Note We do not recommend that you use racks that have obstructions (such as power strips), because the obstructions could impair access to field-replaceable units (FRUs).

General Requirements for Cabinets and Racks

The cabinet or rack must also meet the following requirements:

- Standard 19-inch (48.3 cm) (two- or four-post EIA cabinet or rack, with mounting rails that conform to English universal hole spacing per section 1 of ANSI/EIA-310-D-1992). For more information, see Requirements Specific to Perforated Cabinets, on page 48.

- The minimum vertical rack space requirement per chassis is:
  - For a one RU (rack unit) switch, 1.75 inches (4.4 cm)
  - For a one and a half RU (rack unit) switch, 2.63 (6.68 cm)
  - For a two RU (rack unit) switch, 3.5 inches (8.8 cm)
  - For a three RU (rack unit) switch, 5.25 inches (13.3 cm)
- The width between the rack-mounting rails must be at least 17.75 inches (45.0 cm) if the rear of the device is not attached to the rack. For four-post EIA racks, this measurement is the distance between the two front rails.

Four-post EIA cabinets (perforated or solid-walled) must meet the following requirements:

- The minimum spacing for the bend radius for fiber-optic cables should have the front-mounting rails of the cabinet offset from the front door by a minimum of 3 inches (7.6 cm).
- The distance between the outside face of the front mounting rail and the outside face of the back mounting rail should be 23.0 to 30.0 inches (58.4 to 76.2 cm) to allow for rear-bracket installation.

Requirements Specific to Standard Open Racks

If you are mounting the chassis in an open rack (no side panels or doors), ensure that the rack meets the following requirements:

- The minimum vertical rack space per chassis must be equal to the rack unit (RU) of the chassis. One rack unit is equal to 1.75 inches (4.4 cm).
- The distance between the chassis air vents and any walls should be 2.5 inches (6.4 cm).

Requirements Specific to Perforated Cabinets

A perforated cabinet has perforations in its front and rear doors and side walls. Perforated cabinets must meet the following requirements:

- The front and rear doors must have at least a 60 percent open area perforation pattern, with at least 15 square inches (96.8 square cm) of open area per rack unit of door height.
- The roof should be perforated with at least a 20 percent open area.
- The cabinet floor should be open or perforated to enhance cooling.

The Cisco R Series rack conforms to these requirements.

Cable Management Guidelines

To help with cable management, you might want to allow additional space in the rack above and below the chassis to make it easier to route all of the fiber optic or copper cables through the rack.

APPENDIX B

System Specifications

- Environmental Specifications, on page 49
- Switch Dimensions, on page 49
- Switch and Module Weights and Quantities, on page 50
- Transceiver and Cable Specifications, on page 50
- Switch Power Input Requirements, on page 50
- Power Specifications, on page 51
- Power Cable Specifications, on page 52
- Regulatory Standards Compliance Specifications, on page 55

Environmental Specifications

Environment		Specification
Temperature	Ambient operating temperature	32 to 104°F (0 to 40°C)
	Ambient nonoperating	–40 to 158°F (–40 to 70°C)
Relative humidity	Nonoperating	5 to 95%
	Operating	5 to 90%
Altitude	Operating	0 to 13,123 feet (0 to 4,000 meters)

Switch Dimensions

Switch	Width	Depth	Height
Cisco Nexus 9332PQ	17.3 inches (43.9 cm)	22.5 inches (57.1 cm)	1.72 inches (4.4 cm) (1 RU)

Switch and Module Weights and Quantities

Component	Weight per Unit	Quantity
Cisco Nexus 9332PQ Chassis (N9K-C9332PQ)	22.0 lb (10.0 kg)	1
Fan Module – Port-side exhaust (blue) (NXA-FAN-30CFM-F) – Port-side intake (burgundy) (NXA-FAN-30CFM-B)	— 0.26 lb (0.12 kg)	4
Power Supply module – 650-W AC port-side exhaust (blue) (N9K-PAC-650W-B) – 650-W AC port-side intake (burgundy) (N9K-PAC-650W) – 930-W DC port-side exhaust (gray) (UCS-PSU-6332-DC) – 930-W DC port-side intake (green) (UCSC-PSU-930WDC)	— 2.42 lb (1.1 kg) 2.42 lb (1.1 kg) 2.42 lb (1.1 kg) 2.42 lb (1.1 kg)	2 (1 for operations and 1 for redundancy)

Transceiver and Cable Specifications

To determine which transceivers, adapters, and cables are supported by this switch, see https://www.cisco.com/c/en/us/support/interfaces-modules/transceiver-modules/products-device-support-tables-list.html.

To see the transceiver specifications and installation information, see https://www.cisco.com/c/en/us/support/interfaces-modules/transceiver-modules/products-device-support-tables-list.html.

Switch Power Input Requirements

The following table lists the typical amount of power that the switch consumes. It also lists the maximum amount of power that you must provision for the switch and power supply for peak conditions.

Note Some power supplies have capabilities that are greater than the maximum power requirements for a switch. To determine the power consumption characteristics for the switch, use the typical and maximum requirements that are listed in the following table.

Switch	Typical Power Consumption (AC or DC)	Maximum Power Consumption (AC or DC)	Heat Dissipa Requirement
Cisco Nexus 9332PQ	228 W	508 W	1733.367 BT per hour

Power Specifications

Power specifications include the specifications for each type of power supply module.

650-W AC Power Supply Specifications

These specifications apply to the following power supplies:

- N9K-PAC-650W
- N9K-PAC-650W-B

Characteristic	Specification
AC input voltage	Nominal range: 100 and 240 VAC (Range: 90-132 VAC, 180-264 VAC)
AC input frequency	Nominal range: 50 to 60 Hz (Range: 47-63 Hz)
Maximum AC input current	7.6 A at 90 - 132 VAC 3.65 A at 180 - 264 VAC
Maximum input volt-amperes	760 VA at 100 VAC
Maximum output power per power supply	650 W
Maximum inrush current	11 A (sub-cycle duration)
Maximum hold-up time	12 ms at 650 W
Power supply output voltage	12 VDC
Power supply standby voltage	12 VDC
Efficiency rating	Climate Savers Platinum Efficiency (80Plus Platinum certified)
Form factor	RSP1

930-W DC Power Supply (Port-Side Intake) Specifications

These specifications apply to the 930-W DC (UCSC-PSU-930WDC) port-side intake power supplies.

Characteristic	Specification
DC input voltage range	Nominal range: -48 to -60 VDC nominal (Range: -40 to -60 VDC)
Maximum DC input current	23 A at -48 VDC
Maximum input W	1104 W
Maximum output power per power supply	930 W

Characteristic	Specification
Maximum inrush current	35 A (sub-cycle duration)
Maximum hold-up time	8 ms at 930 W
Power supply output voltage	12 VDC
Power supply standby voltage	12 VDC
Efficiency rating	Greater than 92% at 50% load
Form factor	RSP1

930-W DC Power Supply (Port-Side Exhaust) Specifications

These specifications apply to the 930-W DC (UCS-PSU-6332-DC) power supplies.

Characteristic	Specification
Maximum DC input current	23 A at -48 VDC
Maximum input W	1104 W
Maximum output power per power supply	930 W
Maximum inrush current	35 A at +35° Celcius
Maximum hold-up time	8 ms at 50 % load
Power supply output voltage	12 VDC
Power supply standby voltage	12 VDC
Efficiency rating	Climate Savers Platinum Efficiency (80Plus Platinum certified)
Form factor	1U

Power Cable Specifications

The following sections specify the power cables that you can order and use with this switch.

Power Cable Specifications for AC Power Supplies

Locale	Power Cord Part Number	Cord Set Description
	CAB-C13-C14-2M	Power Cord Jumper, C13-C14 Connectors, 6.6 feet (2.0 m)

Locale	Power Cord Part Number	Cord Set Description
	CAB-C13-CBN	Cabinet jumper power cord, 250 VAC, 10 A, C14-C13 connectors, 2.3 feet (0.7 m)
Argentina	CAB-250V-10A-AR	250 V, 10 A, 8.2 feet (2.5 m)
Australia	CAB-9K10A-AU	250 VAC, 10 A, 3112 plug, 8.2 feet (2.5 m)
Brazil	CAB-250V-10A-BR	250 V, 10 A, 6.9 feet (2.1 m)
European Union	CAB-9K10A-EU	250 VAC, 10 A, CEE 7/7 plug, 8.2 feet (2.5 m)
India	CAB-IND-10A	10 A, 8.2 feet (2.5 m)
India	CAB-C13-C14-2M-IN	Power Cord Jumper, C13-C14 Connectors, 6.6 feet (2.0 m)
India	CAB-C13-C14-3M-IN	Power Cord Jumper, C13-C14 Connectors, 9.8 feet (3.0 m)
Israel	CAB-250V-10A-IS	250 V, 10 A, 8.2 feet (2.5 m)
Italy	CAB-9K10A-IT	250 VAC, 10 A, CEI 23-16/VII plug, 8.2 feet (2.5 m)
Japan	CAB-C13-C14-2M-JP	Power Cord Jumper, C13-C14 Connectors, 6.6 feet (2.0 m)
North America	CAB-9K12A-NA	125 VAC, 13 A, NEMA 5-15 plug, 8.2 feet (2.5 m)
North America	CAB-AC-L620-C13	NEMA L6-20-C13, 6.6 feet (2.0 m)
North America	CAB-N5K6A-NA	200/240V, 6A, 8.2 feet (2.5 m)
Peoples Republic of China	CAB-250V-10A-CN	250 V, 10 A, 8.2 feet (2.5 m)
South Africa	CAB-250V-10A-ID	250 V, 10 A, 8.2 feet (2.5 m)
Switzerland	CAB-9K10A-SW	250 VAC, 10 A, MP232 plug, 8.2 feet (2.5 m)
United Kingdom	CAB-9K10A-UK	250 VAC, 10 A, BS1363 plug (13 A fuse), 8.2 (2.5 m)
All except Argentina, Brazil, and Japan	NO-POWER-CORD	No power cord included with switch

HVAC/HVDC Power Cables Supported by ACI-Mode and NX-OS Mode Switches

Part Number	Cord Set Description	Photo
CAB-HVAC-SD-0.6M	HVAC 2-foot (0.6 m) cable with Saf-D-Grid and SD connectors 277V AC	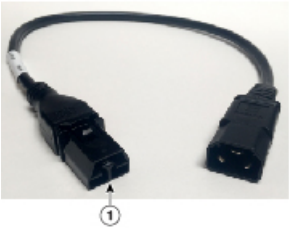
CAB-HVAC-C14-2M	HVAC 6.6-foot (2.0 m) cable with Saf-D-Grid and C14 (use for up to 240 V) connector 250V AC	
CAB-HVAC-RT-0.6M	HVAC 2-foot (0.6 m) cable with Saf-D-Grid and RT connector 277V AC	
CAB-HVDC-3T-2M	HVDC 6.6-foot (2.0 m) cable with Saf-D-Grid and three terminal connectors 300V AC / 400V DC (+200/-200 V DC)	
NO-POWER-CORD	All except Argentina, Brazil, and Japan No power cord included with switch	Not applicable

Table 1: HVAC/HVDC Power Cables Callout Table

1	Connect this end to the power supply unit.

DC Power Cable Specifications

Power Supply	Power Cord	Cord Set Description
UCSC-PSU-930WDC (port-side intake airflow)	(customer supplied)	8 AWG insulated cable (10 AWG minimum) for each

Power Supply	Power Cord	Cord Set Description
UCS-PSU-6332-DC (port-side exhaust airflow)	CAB-48DC-40A-8AWG	8-AWG cable with 3-pin keyed power supply conne (power source connection)
All except Argentina, Brazil, and Japan	NO-POWER-CORD	No power cord included with switch

Regulatory Standards Compliance Specifications

The following table lists the regulatory standards compliance for the switch.

Table 2: Regulatory Standards Compliance: Safety and EMC

Specification	Description
Regulatory compliance	Products should comply with CE Markings according to directives 2004/108/EC and 2006/95/EC.
Safety	• CAN/CSA-C22.2 No. 60950-1 Second Edition • EN 60950-1 Second Edition • IEC 60950-1 Second Edition • IEC 623681 • AS/NZS 60950-1 • GB4943
EMC: Emissions	• 47CFR Part 15 (CFR 47) Class A • AS/NZS CISPR22 Class A • CISPR22 Class A • EN55022 Class A • ICES003 Class A • VCCI Class A • EN61000-3-2 • EN61000-3-3 • KN22 Class A • CNS13438 Class A

Specification	Description
EMC: Immunity	• EN55024 • CISPR24 • EN300386 • KN 61000-4 series
RoHS	The product is RoH-6 compliant with exceptions for leaded-ball grid-array (BGA) balls and lead press-fit connectors.

APPENDIX C

LEDs

- Switch Chassis LEDs, on page 57
- Lane Link LEDs, on page 58
- Fan Module LEDs, on page 58
- Power Supply LEDs, on page 58

Switch Chassis LEDs

The BCN, STS, and ENV, LEDs are located on the left side of the front of the switch. The port LEDs appear as triangles pointing up or down to the nearest port.

LED	Color	Status
BCN	Flashing blue	The operator has activated this LED to identify this switch in the chassis.
	Off	This switch is not being identified.
STS	Green	The switch is operational.
	Flashing amber	The switch is booting up.
	Amber	Temperature exceeds the minor alarm threshold.
	Red	Temperature exceeds the major alarm threshold.
	Off	The switch is not receiving power.
ENV	Green	Fans and power supply modules are operational.
	Amber	At least one fan or power supply module is not operating.
(port)	Green	Port admin state is 'Enabled', SFP is present and the interface is connected (that is, cabled, and the link is up).
	Amber	Port admin state is 'Disabled, or the SFP is absent, or both.
	Off	Port admin state is 'Enabled' and SFP is present, but interface is not connected.

Lane Link LEDs

The Lane Link LEDs indicate which of the break out lanes are being checked. If none of the Lane Link LEDs is lit, all four lanes are being checked.

Fan Module LEDs

The fan module LED is located below the air holes on the front of the module.

LED	Color	Status
STS	Green	The fan module is operational.
	Red	The fan module is not operational (fan is probably not functional).
	Off	Fan module is not receiving power.

Power Supply LEDs

The power supply LEDs are located on the left right portion of the power supply. Combinations of states indicated by the Okay and Fault LEDs indicate the status for the module as shown in the following table.

OK LED	FAIL or FAIL/ID LED	Status
Green	Off	Power supply is on and outputting power to the switch.
Flashing green	Off	Power supply is connected to an AC power source but not outputting power to the switch. The power supply may not be properly installed in the chassis.
Off	Off	Either all the installed power supplies are not receiving power or an uninstalled power supply is not receiving power.
Off	Flashing amber	Power supply is operating but a warning condition has occurred—possibly one of the following conditions: • High temperature • High power • Slow power supply fan • Low voltage • Power supply is installed in the chassis but was disconnected from the power source.
Off	Flashing amber (10 seconds) then amber	Power supply is installed without a connection to a power source.

OK LED	FAIL or FAIL/ID LED	Status
Off	Amber	Power supply failure—possibly one of the following conditions: • Over voltage • Over current • Over temperature • Power supply fan failure

APPENDIX D

Additional Kits

- Rack Mount Kit NXK-ACC-KIT-1RU, on page 61
- Rack Mount Kit N3K-C3064-ACC-KIT, on page 62

Rack Mount Kit NXK-ACC-KIT-1RU

The following table lists and illustrates the contents for the 1-RU rack-mount kit (NXK-ACC-KIT-1RU).

Illustration	Description	Quantity
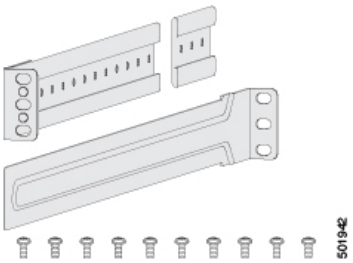	Rack-mount kit • Front brackets (2) • Rear brackets (2) • Slider rails (2) • M4 Phillips pan-head screws (10)	1
	Ground lug kit • Two-hole lug (1) • M4 x 8-mm Phillips pan-head screws (2)	1
Not applicable	EAC Compliance document	1
Not applicable	Hazardous substances list for customers in China	1

The following table lists and illustrates the console cable (CAB-CONSOLE-RJ45) that can be ordered.

Illustration	Description	Quantity
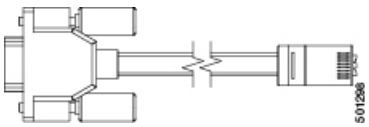	Console cable with DB-9F and RJ-45F connectors	1

Rack Mount Kit N3K-C3064-ACC-KIT

The following table lists and illustrates the contents for the 1-RU rack-mount kit (N3K-C3064-ACC-KIT).

Illustration	Description	Quantity
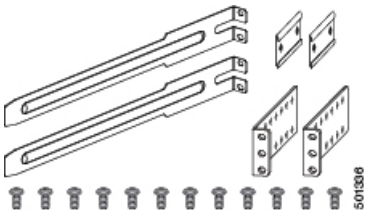	Rack-mount kit • Front-mount angled bracket (2) • Rear-mount slider bracket (2) • Slider rails (2) • M4 x 7 mm mounting screws (16)	1
	Ground lug kit • Two-hole lug (1) • M4 x 8-mm Phillips pan-head screws (2)	1
Not applicable	EAC Compliance document	1
Not applicable	Hazardous substances list for customers in China	1

The following table lists and illustrates the console cable (CAB-CONSOLE-RJ45) that can be ordered.

Illustration	Description	Quantity
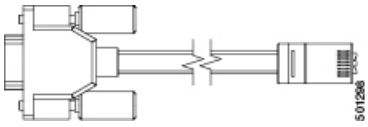	Console cable with DB-9F and RJ-45F connectors	1

APPENDIX E

Site Preparation and Maintenance Records

- Site Preparation Checklist, on page 63
- Contact and Site Information, on page 64
- Chassis and Module Information, on page 65

Site Preparation Checklist

Planning the location and layout of your equipment rack or cabinet is essential for successful switch operation, ventilation, and accessibility.

The following table lists the site planning tasks that we recommend that you complete before you install the switch. Your completion of each task ensures a successful switch installation.

Planning Activity	Verification Time and Date
Space evaluation:	
Space and layout	
Floor covering	
Impact and vibration	
Lighting	
Physical access	
Maintenance access	
Environmental evaluation:	
Ambient temperature	
Humidity	
Altitude	
Atmospheric contamination	
Airflow	

Planning Activity	Verification Time and Date
Power evaluation:	
Input power type	
Power receptacles	
Receptacle proximity to the equipment	
Dedicated (separate) circuits for power redundancy	
UPS for power failures	
Grounding: proper wire gauge and lugs	
Circuit breaker size	
Grounding evaluation:	
Data center ground	
Cable and interface equipment evaluation:	
Cable type	
Connector type	
Cable distance limitations	
Interface equipment (transceivers)	
EMI evaluation:	
Distance limitations for signaling	
Site wiring	
RFI levels	

Contact and Site Information

Use the following worksheet to record contact and site information for the installation.

Contact person	
Contact phone	

Contact e-mail	
Building/site name	
Data center location	
Floor location	
Address (line 1)	
Address (line 2)	
City	
State/Provence	
Contact person	
ZIP/postal code	
Country	

Chassis and Module Information

Use the following worksheet to record information about the switch.

Contract number	
Chassis serial number	
Product number	

Use the following worksheet to record network-related information.

Switch IP address	
Switch IP netmask	
Hostname	
Domain name	
IP broadcast address	
Gateway/router address	
DNS address	

Use the following worksheet to record information about the modules in the switch.

Module Slot	Module Type	Module Serial Number	Notes
Fan module 1			

Module Slot	Module Type	Module Serial Number	Notes
Fan module 2			
Fan module 3			
Fan module 4			
Power Supply 1			
Power Supply 2			