Configuring Port Channels

Information About Port Channels

This section includes the following topics:

Port Channels Overview

Port channels refer to the aggregation of multiple physical interfaces into one logical interface to provide higher aggregated bandwidth, load balancing, and link redundancy (See Figure 6-1). Port channels can connect to interfaces across switching modules, so a failure of a switching module cannot bring down the port channel link. They are referred to as port channels in Fibre Channel (FC), Fibre Channel over IP (FCIP), and Ethernet port channels in Fibre Channel over Ethernet (FCoE). In FCoE, virtual Fibre Channel (vfc) interfaces can be bound to Ethernet port channels.

Figure 6-1 Port channel Flexibility

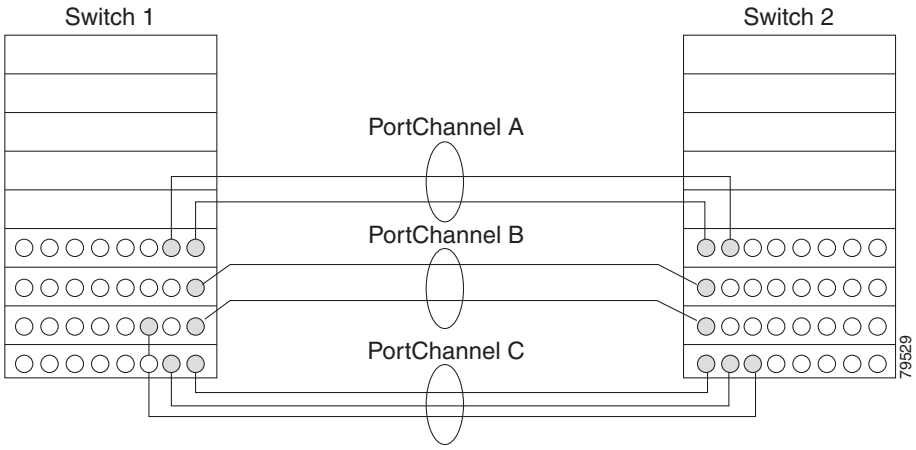

Port channels on Cisco MDS 9000 Series switches allow flexibility in configuration. This illustrates three possible port channel configurations:

- Port channel A aggregates two links on two interfaces on the same switching module at each end of a connection.
- Port channel B also aggregates two links, but each link is connected to a different switching module. If the switching module goes down, traffic is not affected. We recommend that you use the port channel B configuration for best result.
- Port channel C aggregates three links. Two links are on the same switching module at each end, while one is connected to a different switching module on switch 2.

Port Channeling and Trunking

Trunking is a commonly used storage industry term. However, the Cisco NX-OS software and switches in the Cisco MDS 9000 Series implement trunking and port channeling as follows:

- Port channeling enables several physical links to be combined into one aggregated logical link.
- Trunking enables a link transmitting frames in the EISL format to carry (trunk) multiple VSAN traffic. For example, when trunking is operational on an E port, that E port becomes a TE port. A TE port is specific to switches in the Cisco MDS 9000 Series. An industry standard E port can link to other vendor switches and is referred to as a nontrunking interface (See Figure 6-2 and Figure 6-3). See Chapter 5, "Configuring Trunking," for information on trunked interfaces.

Figure 6-2 Trunking Only

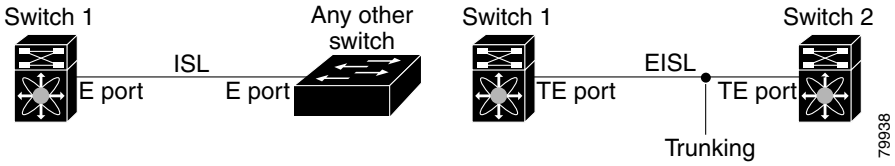

Figure 6-3 Port Channeling and Trunking

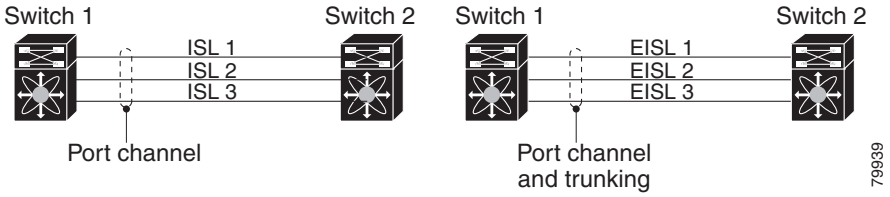

Port channeling and trunking are used separately across an ISL.

- Port channeling—Interfaces can be channeled between the following sets of ports:
  - E ports and TE ports
  - F ports and NP ports
  - TF ports and TNP ports
- Trunking—Trunking permits carrying traffic on multiple VSANs between switches.

  See the *Cisco MDS 9000 Series NX-OS Fabric Configuration Guide*.
- Both port channeling and trunking can be used between TE ports over EISLs.

Load Balancing

Two methods support the load-balancing functionality:

- Flow based—All frames between source and destination follow the same links for a given flow. That is, whichever link is selected for the first exchange of the flow is used for all subsequent exchanges.
- Exchange based—The first frame in an exchange picks a link and subsequent frames in the exchange follow the same link. However, subsequent exchanges can use a different link. This provides more granular load balancing while preserving the order of frames for each exchange.

Figure 6-4 illustrates how source ID 1 (SID1) and destination ID1 (DID1) based load balancing works. When the first frame in a flow is received on an interface for forwarding, link 1 is selected. Each subsequent frame in that flow is sent over the same link. No frame in SID1 and DID1 utilizes link 2.

Figure 6-4 SID1 and DID1-Based Load Balancing

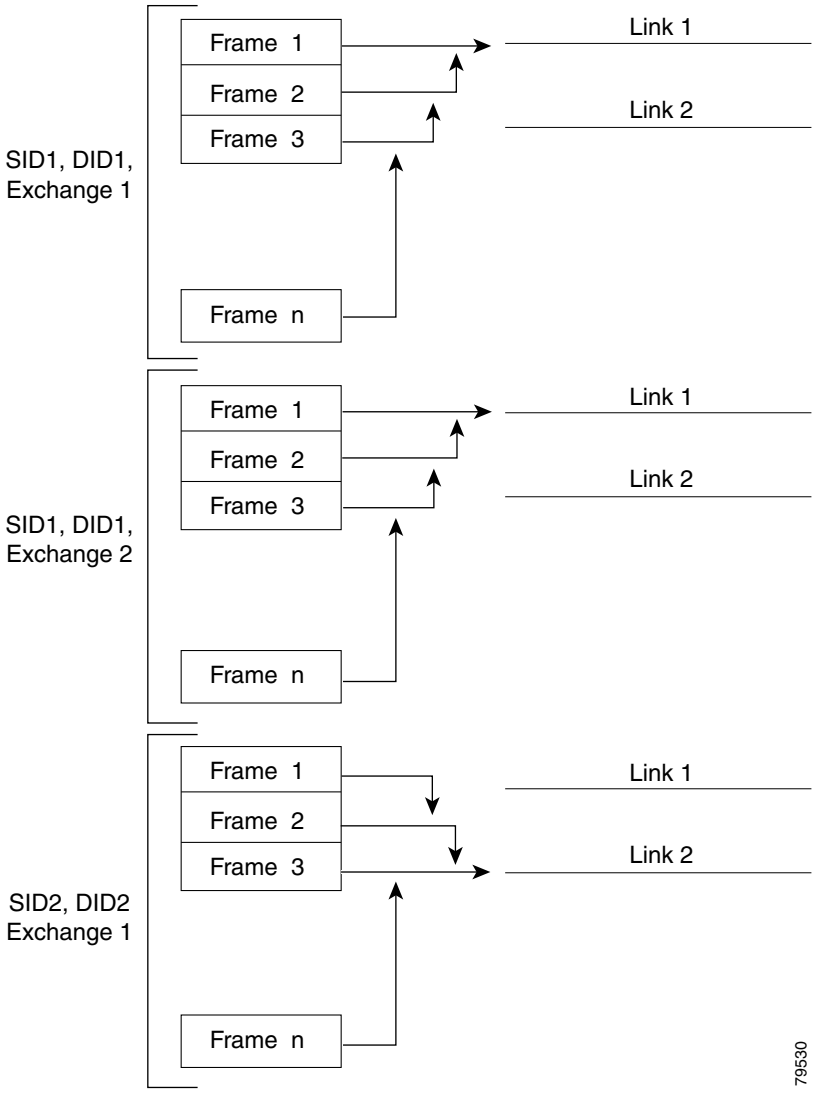

Figure 6-5 illustrates how exchange-based load balancing works. When the first frame in an exchange is received for forwarding on an interface, link 1 is chosen by a hash algorithm. All remaining frames in that particular exchange are sent on the same link. For exchange 1, no frame uses link 2. For the next exchange, link 2 is chosen by the hash algorithm. Now all frames in exchange 2 use link 2.

Figure 6-5 SID1, DID1, and Exchange-Based Load Balancing

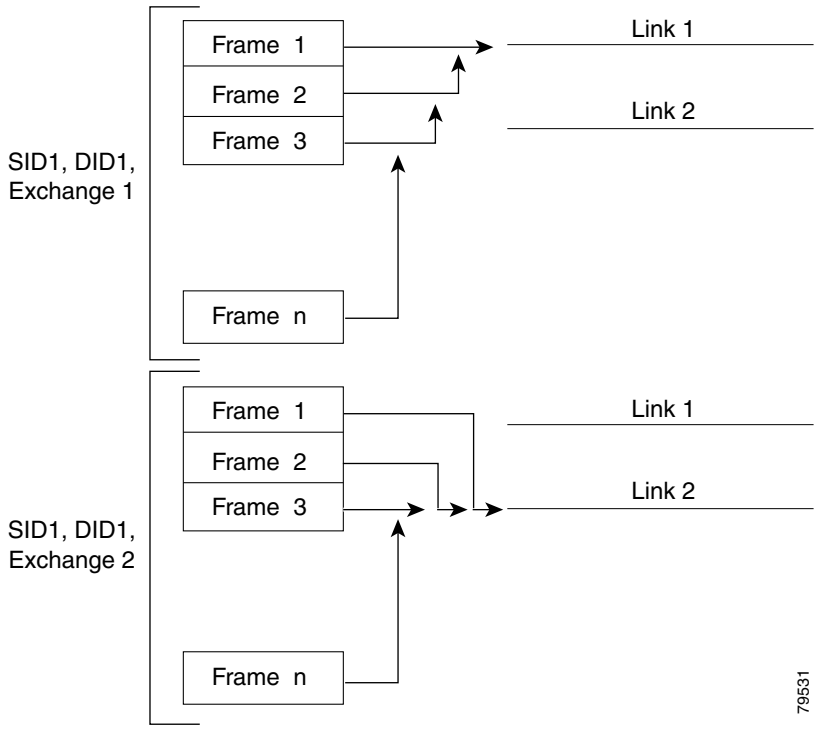

For more information on configuring load balancing and in-order delivery features, see the *Cisco MDS 9000 Series NX-OS Fabric Configuration Guide*.

Port Channel Modes

You can configure each port channel with a channel group mode parameter to determine the port channel protocol behavior for all member ports in this channel group. The possible values for a channel group mode are as follows:

- ON (default)—The member ports only operate as part of a port channel or remain inactive. In this mode, the port channel protocol is not initiated. However, if a port channel protocol frame is received from a peer port, the software indicates its nonnegotiable status. This mode is backward compatible with the existing implementation of port channels in releases prior to Release 2.0(1b), where the channel group mode is implicitly assumed to be ON. In Cisco MDS SAN-OS Releases 1.3 and earlier, the only available port channel mode was the ON mode. Port channels configured in the ON mode require you to explicitly enable and disable the port channel member ports at either end if you add or remove ports from the port channel configuration. You must physically verify that the local and remote ports are connected to each other.
- ACTIVE—The member ports initiate port channel protocol negotiation with the peer port(s) regardless of the channel group mode of the peer port. If the peer port, while configured in a channel group, does not support the port channel protocol, or responds with a nonnegotiable status, it will default to the ON mode behavior. The ACTIVE port channel mode allows automatic recovery without explicitly enabling and disabling the port channel member ports at either end.

Table 6-1 compares ON and ACTIVE modes.

Table 6-1 Channel Group Configuration Differences

ON Mode	ACTIVE Mode
No protocol is exchanged.	A port channel protocol negotiation is performed with the peer ports.
Moves interfaces to the suspended state if its operational values are incompatible with the port channel.	Moves interfaces to the isolated state if its operational values are incompatible with the port channel.
When you add or modify a port channel member port configuration, you must explicitly disable (shut) and enable (no shut) the port channel member ports at either end.	When you add or modify a port channel interface, the port channel automatically recovers.
Port initialization is not synchronized.	There is synchronized startup of all ports in a channel across peer switches.
All misconfigurations are not detected as no protocol is exchanged.	Consistently detect misconfigurations using a port channel protocol.
Transitions misconfigured ports to the suspended state. You must explicitly disable (shut) and enable (no shut) the member ports at either end.	Transitions misconfigured ports to the isolated state to correct the misconfiguration. Once you correct the misconfiguration, the protocol ensures automatic recovery.
This is the default mode.	You must explicitly configure this mode.

Valid and Invalid Port Channel Examples

Port channels are created with default values. You can change the default configuration just like any other physical interface.

Figure 6-6 provides examples of valid port channel configurations.

Figure 6-6 Valid Port Channel Configurations

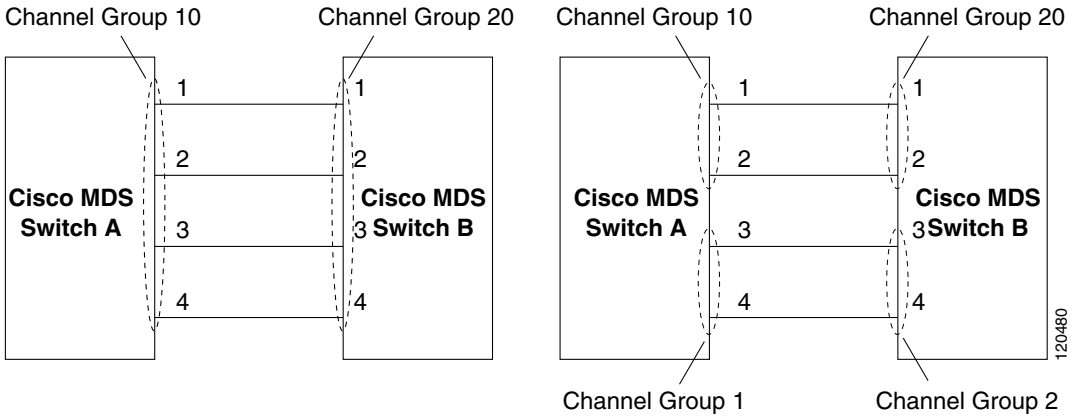

Figure 6-7 provides examples of invalid configurations. Assuming that the links are brought up in the 1, 2, 3, 4 sequence, links 3 and 4 will be operationally down as the fabric is misconfigured.

Figure 6-7 Misconfigured Configurations

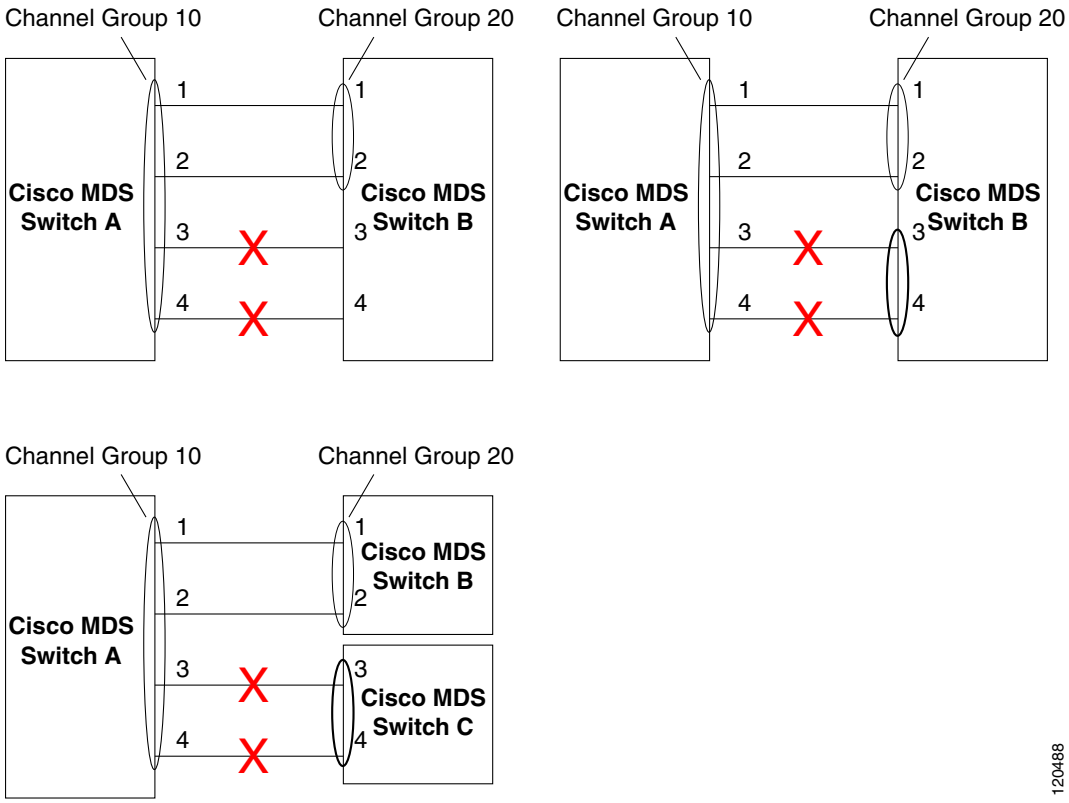

Ethernet Port Channel

Note Ethernet port channel is not supported for IP Storage port for MDS 9250i switch and Gigabit Ethernet ports for MDS 9000 Series switches.

Ethernet port channels offer link redundancy between the Cisco MDS 9000 Series switch's FCoE Ethernet ports and the connecting Ethernet switch. Fibre Channel port channels also offer (E)ISL link redundancy between Fibre Channel switches. FCIP is an (E)ISL link and is only applicable for a Fibre Channel port channel. Beneath the FCIP level, an FCIP link can run on top of Gigabit Ethernet port. This link is totally transparent to the Fibre Channel layer.

Figure 6-8 displays an Ethernet port channel.

Figure 6-8 Ethernet Port Channel

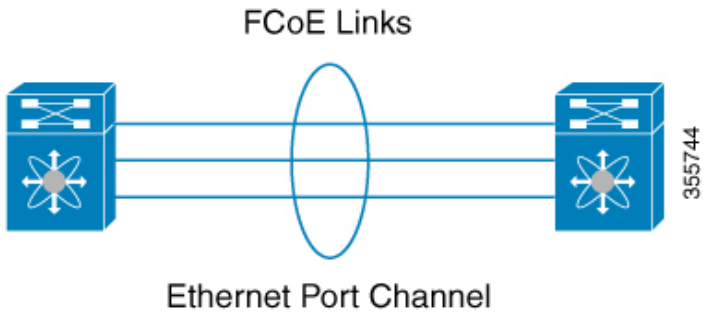

The following characteristics set Ethernet port channel solutions apart from other solutions:

- The FCoE Ethernet link-level redundancy ensures a transparent failover if one of the FCoE Ethernet links fails.
- Two FCoE Ethernet ports in one Ethernet port channel appear like one logical FCoE Ethernet link.

For configuration information, see "Configuring Ethernet Port Channels" section on page 6-24.

Ethernet Port Channel Load Balancing

The Cisco NX-OS software load balances traffic across all operational interfaces in a port channel by hashing the addresses in the frame to a numerical value that selects one of the links in the channel. Port channels provide load balancing by default. Port-channel load balancing uses MAC addresses, IP addresses, or Layer 4 port numbers to select the link. Port-channel load balancing uses either source or destination addresses or ports, or both source and destination addresses or ports.

You can configure the load- balancing mode to apply to all port channels that are configured on the entire device or on specified modules. The per-module configuration takes precedence over the load-balancing configuration for the entire device. You can configure one load-balancing mode for the entire device, a different mode for specified modules, and another mode for the other specified modules. You cannot configure the load-balancing method per port channel.

You can configure the type of load-balancing algorithm used. You can choose the load-balancing algorithm that determines which member port to select for egress traffic by looking at the fields in the frame.

Note The default load-balancing mode for Layer 3 interfaces is the source and destination IP address, and the default load-balancing mode for non-IP traffic is the source and destination MAC address. Use the **port-channel load-balance** command to set the load-balancing method among the interfaces in the channel-group bundle. The default method for Layer 2 packets is **src-dst-mac**. The default method for Layer 3 packets is **src-dst-ip**.

Ethernet Port Channel Aggregation

Ethernet port channels refer to the aggregation of multiple physical Gigabit Ethernet interfaces into one logical Ethernet interface to provide link redundancy and, in some cases, higher aggregated bandwidth and load balancing.

Note The Cisco Ethernet switch's port channel should be configured as a static port channel, and not the default 802.3ad protocol.

Note Port channel members must be one of these combinations: ports 1–2, ports 3–4, ports 5–6, or ports 7–8.

Fibre Channel Port Channel

Fibre Channel port channel is for both (E)ISL and F and TF for connections to Cisco NPV switches. Fibre Channel port channels can be comprised of either Fibre Channel interfaces or FCIP interfaces. FCIP is an (E)ISL link and is only applicable for a Fibre Channel port channel.

Fibre Channel and FCIP interfaces cannot be combined into one Fibre Channel port channel. Fibre Channel port channels must be comprised of either Fibre Channel or FCIP interfaces. The maximum number of Fibre Channel ports that can be put into a Fibre Channel port channel is 16.

E Port Channels

An E port channel refers to the aggregation of multiple E ports into one logical interface to provide higher aggregated bandwidth, load balancing, and link redundancy. Port channels can connect to interfaces across switching modules, so a failure of a switching module cannot bring down the port channel link.

A port channel has the following features and restrictions:

- Provides a point-to-point connection over ISL (E ports) or EISL (TE ports). Multiple links can be combined into a port channel.
- Increases the aggregate bandwidth on an ISL by distributing traffic among all functional links in the channel.
- Load balances across multiple links and maintains optimum bandwidth utilization. Load balancing is based on the source ID, destination ID, and exchange ID (OX ID).
- Provides high availability on an ISL. If one link fails, traffic previously carried on this link is switched to the remaining links. If a link goes down in a port channel, the upper protocol is not aware of it. To the upper protocol, the link is still there, although the bandwidth is diminished. The routing tables are not affected by link failure. Port channels may contain up to 16 physical links and may span multiple modules for added high availability.

Note See the *Cisco MDS 9000 Series NX-OS Fabric Configuration Guide* for information about failover scenarios for port channels and FSPF links.

F and TF Port Channels

An F port channel is also a logical interface that combines a set of F ports connected to the same Fibre Channel node and operates as one link between the F ports and the NP ports. The F port channels support bandwidth utilization and availability like the E port channels. F port channels are mainly used to connect MDS core and NPV switches to provide optimal bandwidth utilization and transparent failover between the uplinks of a VSAN.

An F port channel trunk combines the functionality and advantages of a TF port and an F port channel. This logical link uses the Cisco PTP and PCP protocols over Cisco EPP (ELS).

Note If a Cisco MDS 9124 or 9134 switch is used as a core switch, only a nontrunking F port channel is supported. Trunking is not supported on this platform when NPIV enabled.

Port Channel Deletion

When you delete the port channel, the corresponding channel membership is also deleted. All interfaces in the deleted port channel convert to individual physical links. After the port channel is removed, regardless of the mode used (ACTIVE and ON), the ports at either end are gracefully brought down, indicating that no frames are lost when the interface is going down.

If you delete the port channel for one port, then the individual ports within the deleted port channel retain the compatibility parameter settings (speed, mode, port VSAN, allowed VSAN, and port security). You can explicitly change those settings as required.

- If you use the default ON mode to avoid inconsistent states across switches and to maintain consistency across switches, then the ports shut down. You must explicitly enable those ports again.
- If you use the ACTIVE mode, then the port channel ports automatically recover from the deletion.

Interfaces in a Port Channel

You can add or remove a physical interface (or a range of interfaces) to an existing port channel. The compatible parameters on the configuration are mapped to the port channel. Adding an interface to a port channel increases the total bandwidth of the port channel. Removing an interface from a port channel decreases the total bandwidth of the port channel.

Note For information about port channel support on Generation 2 switching modules.

Interface Addition to a Port Channel

You can add a physical interface (or a range of interfaces) to an existing port channel. The compatible parameters on the configuration are mapped to the port channel. Adding an interface to a port channel increases the total bandwidth of the port channel.

A port can be configured as a member of a static port channel only if the following configurations are the same in the port and the port channel:

- Fibre Channel or FCIP
- Speed
- Mode
- Rate mode
- Port VSAN
- Trunking mode
- Allowed VSAN list or VF-ID list

After the members are added, regardless of the mode (ACTIVE and ON) used, the ports at either end are gracefully brought down, indicating that no frames are lost when the interface is going down.

Compatibility Check

A compatibility check ensures that the same parameter settings are used in all physical ports in the channel. Otherwise, they cannot become part of a port channel. The compatibility check is performed before a port is added to the port channel.

The check ensures that the following parameters and settings match at both ends of a port channel:

- Capability parameters (type of interface, Gigabit Ethernet at both ends, or Fibre Channel at both ends).
- Administrative compatibility parameters (speed, mode, rate mode, port VSAN, allowed VSAN list, and port security).

  Note Ports in shared rate mode cannot form a port channel or a trunking port channel.

- Operational parameters (remote switch WWN and trunking mode).

A port addition procedure fails if the capability and administrative parameters in the remote switch are incompatible with the capability and administrative parameters in the local switch. If the compatibility check is successful, the interfaces are operational and the corresponding compatibility parameter settings apply to these interfaces.

Suspended and Isolated States

If the operational parameters are incompatible, the compatibility check fails and the interface is placed in a suspended or isolated state based on the configured mode:

- An interface enters the suspended state if the interface is configured in the ON mode.
- An interface enters the isolated state if the interface is configured in the ACTIVE mode.

Forcing an Interface Addition

You can force the port configuration to be overwritten by the port channel. In this case, the interface is added to a port channel.

- If you use the default ON mode to avoid inconsistent states across switches and to maintain consistency across switches, then the ports shut down. You must explicitly enable those ports again.
- If you use the ACTIVE mode, then the port channel ports automatically recover from the addition.

Note When port channels are created from within an interface, the **force** option cannot be used.

After the members are forcefully added, regardless of the mode (ACTIVE and ON) used, the ports at either end are gracefully brought down, indicating that no frames are lost when the interface is going down.

Deleting Interface from a Port Channel

When a physical interface is deleted from the port channel, the channel membership is automatically updated. If the deleted interface is the last operational interface, then the port channel status is changed to a down state. Deleting an interface from a port channel decreases the total bandwidth of the port channel.

- If you use the default ON mode to avoid inconsistent states across switches and to maintain consistency across switches, then the ports shut down. You must explicitly enable those ports again.
- If you use the ACTIVE mode, then the port channel ports automatically recover from the deletion.

After the members are deleted, regardless of the mode (ACTIVE and ON) used, the ports at either end are gracefully brought down, indicating that no frames are lost when the interface is going down.

Port Channel Protocols

In earlier Cisco SAN-OS releases, port channels required additional administrative tasks to support synchronization. The Cisco NX-OS software provides robust error detection and synchronization capabilities. Any change in configuration applied to the associated port channel interface is propagated to all members of the channel group.

A protocol to exchange port channel configurations is available in all Cisco MDS switches. This addition simplifies port channel management with incompatible ISLs.

The port channel protocol is enabled by default.

The port channel protocol expands the port channel functional model in Cisco MDS switches. It uses the exchange peer parameters (EPP) services to communicate across peer ports in an ISL. Each switch uses the information received from the peer ports along with its local configuration and operational values to decide if it should be part of a port channel. The protocol ensures that a set of ports are eligible to be part of the same port channel. They are only eligible to be part of the same port channel if all the ports have a compatible partner.

The port channel protocol uses the following subprotocol:

Bringup protocol—Automatically detects misconfigurations so you can correct them. This protocol synchronizes the port channel at both ends so that all frames for a given flow (as identified by the source FC ID, destination FC ID and OX_ID) are carried over the same physical link in both directions. This helps make applications such as write acceleration, work for port channels over FCIP links.

Prerequisites for Port Channels

Before configuring a port channel, consider the following guidelines:

- Configure the port channel across switching modules to implement redundancy on switching module reboots or upgrades.
- Ensure that one port channel is not connected to different sets of switches. Port channels require point-to-point connections between the same set of switches.

Note On switches with Generation 1 switching modules, or a combination of Generation 1 and Generation 2 switching modules, you can configure a maximum of 128 port channels. On switches with only Generation 2 switching modules, or Generation 2 and Generation 3 switching modules, you can configure a maximum of 256 port channels.

If you misconfigure port channels, you may receive a misconfiguration message. If you receive this message, the port channel's physical links are disabled because an error has been detected.

A port channel error is detected if the following requirements are not met:

- Each switch on either side of a port channel must be connected to the same number of interfaces.

- Each interface must be connected to a corresponding interface on the other side (see Figure 6-7 for an example of an invalid configuration).
- Links in a port channel cannot be changed after the port channel is configured. If you change the links after the port channel is configured, be sure to reconnect the links to interfaces within the port channel and reenable the links.

If all three conditions are not met, the faulty link is disabled.

Enter the **show interface** command for that interface to verify that the port channel is functioning as required.

Guidelines and Limitations

This section includes the guidelines and limitations for this feature:

- General Guidelines and Limitations, page 6-13
- Guidelines and Limitations for vFC, page 6-13
- F and TF Port Channel Limitations, page 6-14
- Valid and Invalid Port Channel Examples, page 6-6

General Guidelines and Limitations

Cisco MDS 9000 Series switches support the following number of port channels per switch:

- Switches with only Generation 1 switching modules do not support F and TF port channels.
- Switches with Generation 1 switching modules, or a combination of Generation 1 and Generation 2 switching modules, support a maximum of 128 port channels. Only Generation 2 ports can be included in the port channels.
- Switches with only Generation 2 switching modules or Generation 2 and Generation 3 modules support a maximum of 256 port channels with 16 interfaces per port channel.
- A port channel number refers to the unique identifier for each channel group. This number ranges from of 1 to 256.
- The compatibility parameters on both side of the port channel must match.

Guidelines and Limitations for vFC

When configuring vFC interfaces, note the following guidelines and limitations:

- Each vFC interface can be bound to one of the following interfaces:
  - An Ethernet interface
  - An Ethernet port channel
  - A media access control (MAC) address of an FCoE Node (ENode) or a remote Fibre Channel Forwarder (FCF) identified by the virtual FC interface
- FCoE is not supported on private VLAN.

F and TF Port Channel Limitations

The following guidelines and restrictions are applicable for F and TF port channels:

- The ports must be in F mode.
- The port channel interface must be in ACTIVE mode when multiple FCIP interfaces are grouped with WA.
- ON mode is not supported. Only ACTIVE-ACTIVE mode is supported. By default, the mode is ACTIVE on the NPV switches.
- Devices logged in through F port channel on an MDS switch are not supported in IVR non-NAT configuration. The devices are supported only in IVR NAT configuration.
- Port security rules are enforced only on physical pWWNs at the single link level.
- FC-SP authenticates only the first physical FLOGI of every port channel member.
- Since the FLOGI payload carries only the VF bits to trigger the use of a protocol after the FLOGI exchange, those bits will be overridden. In the case of the NPV switches, the core has a Cisco WWN and will try to initiate the PCP protocol.
- The name server registration of the N ports logging in through an F port channel will use the fWWN of the port channel interface.
- DPVM configuration is not supported.
- The port channel port VSAN cannot be configured using DPVM.
- The Dynamic Port VSAN Management (DPVM) database will be queried only for the first physical FLOGI of each member, so that the port VSAN can be configured automatically.
- DPVM does not bind FC_IDs to VSANs, but pWWNs to VSANs. It will be queried only for the physical FLOGI.

Default Settings

Table 6-2 lists the default settings for port channels.

Table 6-2 Default Port Channel Parameters

Parameters	Default
Port channels	FSPF is enabled by default.
Create port channel	Administratively up.
Default port channel mode	ON mode on non-NPV and NPIV core switches. ACTIVE mode on NPV switches.

Configuring Fibre Channel Port Channels

This section includes the following topics:

- Configuring a Fibre Channel Port Channels, page 6-15
- Configuring the Fibre Channel Port Channel Mode, page 6-15

Configuring a Fibre Channel Port Channels

Detailed Steps

To create a port channel, follow these steps:

	Command	Purpose
Step 1	`switch# configure` `switch(config)#`	Enters configuration mode.
Step 2	`switch(config)# interface port-channel 1` `switch(config-if)#`	Configures the specified port channel (1) using the default ON mode.

Configuring the Fibre Channel Port Channel Mode

By default, the CLI and the Device Manager create the port channel in ON mode in the NPIV core switches and ACTIVE mode on the NPV switches. DCNM-SAN creates all port channels in ACTIVE mode. We recommend that you create port channels in ACTIVE mode.

Restrictions

An F port channel is supported only on ACTIVE mode.

Detailed Steps

To configure ACTIVE mode, follow these steps:

	Command	Purpose
Step 1	`switch# configure` `switch(config)#`	Enters configuration mode.
Step 2	`switch(config)# interface port-channel 1` `switch(config-if)#`	Configures the specified port channel (1) using the default ON mode.
Step 3	`switch(config-if)# channel mode active`	Configures the ACTIVE mode.
	`switch(config-if)# no channel mode active`	Reverts to the default ON mode.

Deleting Fibre Channel Port Channels

Detailed Steps

To delete a port channel, follow these steps:

	Command	Purpose
Step 1	`switch# configure` `switch(config)#`	Enters configuration mode.

Step 2	`switch(config)# no interface port-channel 1`
	`port-channel 1 deleted and all its members disabled`
	`please do the same operation on the switch at the other end of the port-channel`
	`switch(config)#`
		Deletes the specified port channel (1), its associated interface mappings, and the hardware associations for this port channel.

Adding an Interface to a Fibre Channel Port Channel

Detailed Steps

To add an interface to a port channel, follow these steps:

	Command	Purpose
Step 1	`switch# configure` `switch(config)#`	Enters configuration mode.
Step 2	`switch(config)# interface fc1/15` `switch(config-if)#`	Configures the specified port interface (fc1/15).
Step 3	`switch(config-if)# channel-group 15`	Adds physical Fibre Channel port 1/15 to channel group 15. If channel group 15 does not exist, it is created. The port is shut down.

To add a range of ports to a port channel, follow these steps:

	Command	Purpose
Step 1	`switch# configure` `switch(config)#`	Enters configuration mode.
Step 2	`switch(config)# interface fc1/1 - 5` `switch(config-if)#`	Configures the specified range of interfaces. In this example, interfaces from 1/1 to 1/5 are configured.
Step 3	`switch(config-if)# channel-group 2`	Adds physical interfaces 1/1, 1/2, 1/3, 1/4, and 1/5 to channel group 2. If channel group 2 does not exist, it is created. If the compatibility check is successful, the interfaces are operational and the corresponding states apply to these interfaces.

Note By default, the CLI adds a interface normally to a port channel, while DCNM-SAN adds the interface by force, unless specified explicitly.

Forcing an Interface Addition

Detailed Steps

To force the addition of a port to a port channel, follow these steps:

	Command	Purpose
Step 1	`switch# configure` `switch(config)#`	Enters configuration mode.
Step 2	`switch(config)# interface fc1/1` `switch(config-if)#`	Specifies the interface fc1/1.
Step 3	`switch(config-if)# channel-group 1 force`	Forces the addition of the physical port for interface fc1/1 to channel group 1. The port is shut down.

Deleting an Interface from a Fibre Channel Port Channel

Detailed Steps

To delete a physical interface (or a range of physical interfaces) from a port channel, follow these steps:

	Command	Purpose
Step 1	`switch(config)# interface fc1/1` `switch(config-if)#`	Enters the selected physical interface level.
	`switch(config)# interface fc1/1 - 5` `switch(config-if)#`	Enters the selected range of physical interfaces.
Step 2	`switch(config-if)# no channel-group 2` `switch(config-if)#`	Deletes the physical Fibre Channel interfaces in channel group 2.

Verifying Port Channel Configuration

To display port channel configuration information, perform one of the following tasks:

Command	Purpose
show port-channel capacity	Displays port channel capacity information.
show port-channel compatibility-parameters	Displays the port channel compatibility.
show port-channel consistency	Displays the consistency status without details.
show port-channel consistency detail	Displays the consistency status with details.
show port-channel database	Displays the port channel configured in the default ON mode and ACTIVE mode.
show port-channel database interface port-channel *number*	Displays the specified port channel interface.
show port-channel internal	Displays Ethernet port channel service internal status.
show port-channel rbh-distribution	Displays RBH distribution for member ports.

Command	Purpose
show port-channel summary	Displays the Ethernet port channel group, port channel, type, protocol and member ports.
show port-channel traffic	Displays Ethernet port channel traffic statistics.
show port-channel usage	Displays the port channel usage.

For detailed information about the fields in the output from these commands, refer to the *Cisco MDS NX-OS Command Reference*.

You can view specific information about existing port channels at any time from EXEC mode. The following **show** commands provide further details on existing port channels. You can force all screen output to go to a printer or save it to a file. See Examples 6-1 to 6-6.

Example 6-1 Displays the Port Channel Summary

```
switch# show port-channel summary
--------------------------------------------------------------------------------
Interface                 Total Ports        Oper Ports        First Oper Port
--------------------------------------------------------------------------------
port-channel 77                2                 0                  --
port-channel 78                2                 0                  --
port-channel 79                2                 2                  fcip200
```

Example 6-2 Displays the Configured in the Default ON Mode

```
switch# show port-channel database
port-channel 77
    Administrative channel mode is on
    Operational channel mode is on
    Last membership update succeeded
    2 ports in total, 0 ports up
    Ports:   fcip1    [down]
             fcip2    [down]
port-channel 78
    Administrative channel mode is on
    Operational channel mode is on
    Last membership update succeeded
    2 ports in total, 0 ports up
    Ports:   fc2/1    [down]
             fc2/5    [down]
port-channel 79
    Administrative channel mode is on
    Operational channel mode is on
    Last membership update succeeded
    First operational port is fcip200
    2 ports in total, 2 ports up
    Ports:   fcip101  [up]
             fcip200  [up] *
```

Example 6-3 Displays the Port Channel Configured in the ACTIVE Mode

```
switch# show port-channel database
port-channel 77
    Administrative channel mode is active
    Operational channel mode is active
    Last membership update succeeded
    2 ports in total, 0 ports up
```

```
    Ports:   fcip1    [down]
             fcip2    [down]
port-channel 78
    Administrative channel mode is active
    Operational channel mode is active
    Last membership update succeeded
    2 ports in total, 0 ports up
    Ports:   fc2/1    [down]
             fc2/5    [down]
port-channel 79
    Administrative channel mode is active
    Operational channel mode is active
    Last membership update succeeded
    First operational port is fcip200
    2 ports in total, 2 ports up
    Ports:   fcip101  [up]
             fcip200  [up] *
```

The **show port-channel consistency** command has two options: without details and with details.

Example 6-4 Displays the Consistency Status without Details

```
switch# show port-channel consistency
Database is consistent
```

Example 6-5 Displays the Consistency Status with Details

```
switch# show port-channel consistency detail
Authoritative port-channel database:
================================================
totally 3 port-channels
port-channel 77:
    2 ports, first operational port is none
    fcip1    [down]
    fcip2    [down]
port-channel 78:
    2 ports, first operational port is none
    fc2/1    [down]
    fc2/5    [down]
port-channel 79:
    2 ports, first operational port is fcip200
    fcip101  [up]
    fcip200  [up]
================================================
database 1: from module 5
================================================
totally 3 port-channels
port-channel 77:
    2 ports, first operational port is none
    fcip1    [down]
    fcip2    [down]
port-channel 78:
    2 ports, first operational port is none
    fc2/1    [down]
    fc2/5    [down]
port-channel 79:
    2 ports, first operational port is fcip200
    fcip101  [up]
    fcip200  [up]
================================================
database 2: from module 4
================================================
```

```
totally 3 port-channels
port-channel 77:
    2 ports, first operational port is none
    fcip1    [down]
    fcip2    [down]
port-channel 78:
    2 ports, first operational port is none
    fc2/1    [down]
    fc2/5    [down]
port-channel 79:
    2 ports, first operational port is fcip200
    fcip101  [up]
    fcip200  [up]
...
```

The **show port-channel usage** command displays details of the used and unused port channel numbers.

Example 6-6 Displays the Port Channel Usage

```
switch# show port-channel usage
Totally 3 port-channel numbers used
===================================
Used  :   77 - 79
Unused:   1 - 76 , 80 - 256
```

Example 6-7 Displays the Port Channel Compatibility

```
switch# show port-channel compatibility-parameters
physical port layer                 fibre channel or ethernet
    port mode
    trunk mode
    speed
    port VSAN
    port allowed VSAN list
```

Example 6-8 Displays the Port Channel Summary

```
switch# show port-channel summary
-------------------------------------------------------------------------------
Interface                 Total Ports        Oper Ports        First Oper Port
-------------------------------------------------------------------------------
port-channel 1                 1                 0                  --
port-channel 2                 1                 1                  fc8/13
port-channel 3                 0                 0                  --
port-channel 4                 0                 0                  --
port-channel 5                 1                 1                  fc8/3
port-channel 6                 0                 0                  --
```

Configuration Examples for F and TF Port Channels

This example shows how to configure F port channel in shared mode and bring up the link between F ports on the NPIV core switches and NP ports on the NPV switches:

Note Port channel in shared mode is not supported on the MDS 91x4 switches.

Figure 6-9 Port Channel Link Between F Ports on NPIV Core switch and NP Ports on NPV Switch

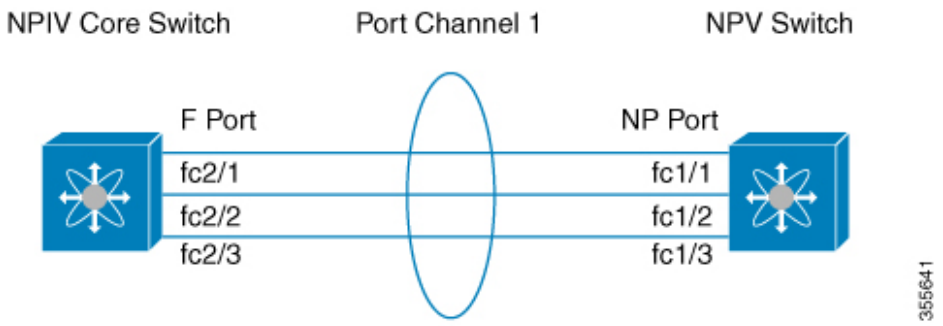

Step 1 Enable the F port trunking and channeling protocol on the MDS core switch.

```
switch(config)# feature fport-channel-trunk
```

Step 2 Enable NPIV on the MDS core switch:

```
switch(config)# feature npiv
```

Step 3 Create the port channel on the MDS core switch:

```
switch(config)# interface port-channel 1
switch(config-if)# switchport mode F
switch(config-if)# channel mode active
switch(config-if)# switchport trunk mode off
switch(config-if)# switchport rate-mode shared
switch(config-if)# exit
```

Step 4 Configure the port channel member interfaces on the core switch:

```
switch(config)# interface fc2/1-3
switch(config-if)# shut
switch(config-if)# switchport mode F
switch(config-if)# switchport trunk mode off
switch(config-if)# switchport speed 4000
switch(config-if)# switchport rate-mode shared
switch(config-if)# channel-group 1
switch(config-if)# no shut
switch(config-if)# exit
```

Step 5 Create the port channel on the NPV switch:

```
switch(config)# interface port-channel 1
switch(config-if)# switchport mode NP
```

```
switch(config-if)# switchport rate-mode shared
switch(config-if)# exit
```

Step 6 Configure the port channel member interfaces on the NPV switch:

```
switch(config)# interface fc1/1-3
switch(config-if)# shut
switch(config-if)# switchport mode NP
switch(config-if)# switchport speed 4000
switch(config-if)# switchport rate-mode shared
switch(config-if)# switchport trunk mode off
switch(config-if)# channel-group 1
switch(config-if)# no shut
switch(config-if)# exit
```

Step 7 Set the administrative state of all the port channel member interfaces in both NPIV core switch and the NPV switch to ON:

```
switch(config)# interface fc1/1-3
switch(config-if)# shut
switch(config-if)# no shut

switch(config)# interface fc2/1-3
switch(config-if)# shut
switch(config-if)# no shut
```

Note The speed configuration must be the same for all member interfaces in a port channel. While configuring the channel in dedicated mode, ensure that required bandwidth is available to the ports.

This example shows how to configure channeling in dedicated mode and bring up the TF-TNP port channel link between TF ports in the NPIV core switch, and TNP ports in the NPV switch:

Figure 6-10 Port Channel Link Between TF Ports on NPIV Core switch and TNP Ports on NPV Switch

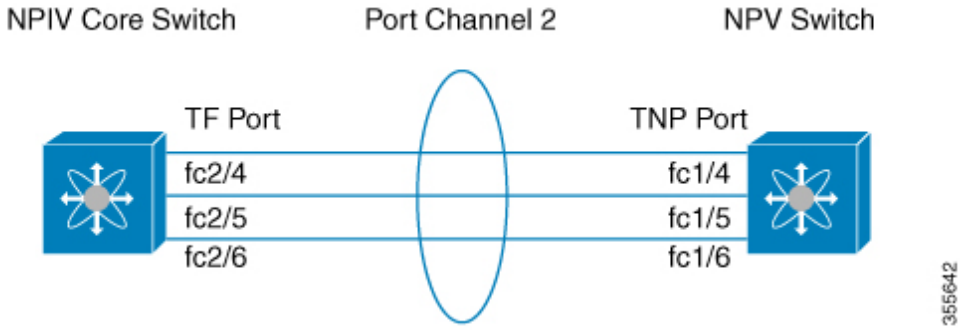

Step 1 Enable the F port trunking and channeling protocol on the MDS core switch:

```
switch(config)# feature fport-channel-trunk
```

Step 2 Enable NPIV on the MDS core switch:

```
switch(config)# feature npiv
```

Step 3 Create the port channel on the MDS core switch:

```
switch(config)# interface port-channel 2
switch(config-if)# switchport mode F
switch(config-if)# switchport rate-mode dedicated
switch(config-if)# channel mode active
switch(config-if)# exit
```

Step 4 Configure the port channel member interfaces on the MDS core switch in dedicated mode:

```
switch(config)# interface fc2/4-6
switch(config-if)# shut
switch(config-if)# switchport mode F
switch(config-if)# switchport speed 4000
switch(config-if)# switchport rate-mode dedicated
switch(config-if)# switchport trunk mode on
switch(config-if)# channel-group 2
switch(config-if)# no shut
switch(config-if)# exit
```

Step 5 Create the port channel in dedicated mode on the NPV switch:

```
switch(config)# interface port-channel 2
switch(config-if)# switchport rate-mode dedicated
switch(config-if)# switchport mode NP
switch(config-if)# no shut
switch(config-if)# exit
```

Step 6 Configure the port channel member interfaces on the NPV switch in dedicated mode:

```
switch(config)# interface fc1/4-6
switch(config-if)# shut
switch(config-if)# switchport mode NP
switch(config-if)# switchport speed 4000
switch(config-if)# switchport rate-mode dedicated
switch(config-if)# switchport trunk mode on
switch(config-if)# channel-group 2
switch(config-if)# no shut
switch(config-if)# exit
```

Step 7 Set the administrative state of all the port channel member interfaces in both NPIV core switch and the NPV switch to ON:

```
switch(config)# interface fc1/4-6
switch(config-if)# shut
switch(config-if)# no shut

switch(config)# interface fc3/1-3
switch(config-if)# shut
switch(config-if)# no shut
```

Configuring Ethernet Port Channels

This section includes the following topics:

- Forcing an Interface Addition to an Ethernet Port Channel, page 6-26
- Deleting an Interface from an Ethernet Port Channel, page 6-26

Configuring Ethernet Port Channels

Detailed Steps

To create a Ethernet port channel, follow these steps:

	Command	Purpose
Step 1	`switch# configure` `switch(config)#`	Enters configuration mode.
Step 2	`switch(config)# interface ethernet-port-channel 521` `switch(config-if)#`	Configures the specified Ethernet port channel using the default ON mode.

Note Ethernet port-channels are not supported on the following:

- Cisco MDS 9000 18/4-Port Multiservice Module (DS-X9304-18K9)
- Cisco MDS 9000 16-Port Storage Services Node (DS-X9316-SSNK9)
- Cisco MDS 9222i Series Switch

Deleting Ethernet Port Channels

Detailed Steps

To delete a Ethernet port channel, follow these steps:

	Command	Purpose
Step 1	`switch# configure` `switch(config)#`	Enters configuration mode.
Step 2	`switch(config)# no interface ethernet-port-channel 513` `switch(config)#`	Deletes the specified Ethernet port channel, its associated interface mappings, and the hardware associations for this Ethernet port channel.

Adding an Interface to a Ethernet Port Channel

Detailed Steps

To add an interface to a Ethernet port channel, follow these steps:

	Command	Purpose
Step 1	`switch# configure` `switch(config)#`	Enters configuration mode.
Step 2	`switch(config)# interface ethernet 5/19` `switch(config-if)#`	Adds an Ethernet port to the Ethernet port channel.
Step 3	`switch(config-if)# channel-group 513`	Adds the interface to a channel group.

To add a range of ports to a Ethernet port channel, follow these steps:

	Command	Purpose
Step 1	`switch# configure` `switch(config)#`	Enters configuration mode.
Step 2	`switch(config)# interface ethernet 1/3-5` `switch(config-if-range)#`	Configures the specified range of interfaces.
Step 3	`switch(config-if-range)# channel-group 513`	Adds interfaces 3, 4 and 5 to a channel group.

By default, the CLI adds a interface normally to a Ethernet port channel, while DCNM-SAN adds the interface by force, unless specified explicitly.

Specifying a Channeling Mode for an Ethernet Interface

Note We recommend that you create Ethernet port channels in Active mode.

Detailed Steps

To specify a channeling mode for an Ethernet interface, follow these steps:

	Command	Purpose
Step 1	`switch# configure` `switch(config)#`	Enters configuration mode.
Step 2	`switch(config)# interface ethernet 4/1` `switch(config-if)#`	Specifies an Ethernet interface.

Step 3	`switch(config-if)# channel-group 513 mode active`
	`switch(config-if)# channel-group 513 mode on`
	`switch(config-if)# channel-group 513 mode passive`
		Specifies one of the following channeling mode:
		• Active
		• On
		• Passive

Forcing an Interface Addition to an Ethernet Port Channel

Detailed Steps

To force the addition of a port to a Ethernet port channel, follow these steps:

	Command	Purpose
Step 1	`switch# configure` `switch(config)#`	Enters configuration mode.
Step 2	`switch(config)# interface ethernet 1/3-5` `switch(config-if-range)#`	Specifies the specified range of interfaces.
Step 3	`switch(config-if)# channel-group 513 force`	Forces the addition of a port for interface ethernet-port-channel to a channel group. The port is shut down.

Deleting an Interface from an Ethernet Port Channel

Detailed Steps

To delete an interface (or a range of physical interfaces) from a Ethernet port channel, follow these steps:

	Command	Purpose
Step 1	`switch(config)# interface ethernet 1/3` `switch(config-if-range)#`	Adds the Ethernet port 1/3 to Ethernet port channel.
Step 2	`switch(config-if)# no channel-group 2` `switch(config-if-range)#`	Deletes the Ethernet port channel interfaces in channel group 2.

Verifying Ethernet Port Channel Configuration

To display Ethernet port channel configuration information, perform one of the following tasks:

Command	Purpose
show ethernet-port-channel summary	Displays the Ethernet port channel group, port channel, type, protocol and member ports.
show ethernet-port-channel database	Displays the Ethernet port channel database.
show ethernet-port-channel usage	Displays the Ethernet port channel usage.
show ethernet-port-channel compatibility-parameters	Displays the Ethernet port channel compatibility.
show ethernet-port-channel database interface port-channel *number*	Displays the specified Ethernet port channel interface.

You can view specific information about existing Ethernet port channels at any time from EXEC mode. The following **show** commands provide further details on existing Ethernet port channels. You can force all screen output to go to a printer or save it to a file.

Example 6-9 Displays the Ethernet Port Channel Summary

```
switch# show ethernet-port-channel summary

Flags:  D - Down        P - Up in port-channel (members)
        I - Individual  H - Hot-standby (LACP only)
        s - Suspended   r - Module-removed
        b - BFD Session Wait
        S - Switched    R - Routed
        U - Up (port-channel)
        M - Not in use. Min-links not met
--------------------------------------------------------------------------------
Group Port-       Type     Protocol  Member Ports
      Channel
--------------------------------------------------------------------------------
513   Epo513(SD)  Eth      NONE      --
514   Epo514(SD)  Eth      NONE      --
515   Epo515(SU)  Eth      LACP      Eth3/7(P)    Eth3/8(P)    Eth3/9(P)
                                     Eth3/10(P)
516   Epo516(SU)  Eth      LACP      Eth2/3(P)    Eth2/4(P)    Eth2/5(P)
                                     Eth2/6(P)
531   Epo531(SU)  Eth      NONE      Eth10/13(P)  Eth10/14(P)  Eth10/15(P)
                                     Eth10/16(P)
671   Epo671(SD)  Eth      NONE      --
672   Epo672(SU)  Eth      LACP      Eth2/17(P)   Eth2/18(P)   Eth3/19(P)
                                     Eth3/20(P)
4090  Epo4090(SD)  Eth      NONE      Eth10/1(D)   Eth10/2(D)   Eth10/3(D)
                                     Eth10/4(D)   Eth10/5(D)   Eth10/6(D)
                                     Eth10/7(D)   Eth10/8(D)
4093  Epo4093(SD)  Eth      NONE      --
4094  Epo4094(SD)  Eth      NONE      --
```

Example 6-10 Displays the Ethernet Port Channel Database

```
switch# show ethernet-port-channel database

ethernet-port-channel513
    Last membership update is successful
    0 ports in total, 0 ports up
    Age of the port-channel is 0d:13h:34m:03s

ethernet-port-channel514
    Last membership update is successful
    0 ports in total, 0 ports up
    Age of the port-channel is 0d:13h:34m:02s
```

The show ethernet-port-channel command displays details of used and unused Ethernet port channel numbers:

Example 6-11 Displays the Ethernet Port Channel Usage

```
switch# show ethernet-port-channel usage
Total 11 port-channel numbers used
===================================
Used  :   513 - 516 , 671 - 672 , 4090 , 4093 - 4094 , 255 - 256
Unused:   1 - 512 , 517 - 670 , 673 - 4089 , 4091 - 4092 , 4095 - 254
          257 – 4096
```

Configuring Virtual Fibre Channel (vFC) Interfaces for FCoE

For information on configuring FCoE vFC interface for FCoE, see "Configuring FCoE VLANs and Virtual Interfaces" chapter in the Cisco NX-OS FCoE Configuration Guide for Nexus 7000 Series and MDS 9000 Series.

This section includes the following topics:

Creating an Explicit Virtual Fibre Channel Interface

An explicit vFC interface is a vFC interface where the bound Ethernet or port-channel interface is explicitly configured. To can create an explicit vFC interface you must bind the vFC interface to a physical interface before it can be used. If you want the vFC interface to automatically bound to the port-channel interface, see Creating an Implicit Virtual Fibre Channel Port Channel Interface, page 6-29.

Before You Begin

- Ensure you have installed the correct license for FCoE.
- Ensure you have enabled FCoE

	Command	Purpose
Step 1	`switch# configure terminal` `switch(config)#`	Enters configuration mode.
Step 2	`switch(config)# interface vfc 4` `switch(config-if)#`	Creates a virtual Fibre Channel interface (if it does not already exist) and enters interface configuration mode. The vfc-id range is from 1 to 8192.
Step 3	`switch(config-if)# switchport mode e`	Configures the switchport mode for a virtual Fibre Channel interface. The mode is E or F. The default is F mode.
Step 4	`switch(config-if)# bind interface ethernet-port-channel 513` `switch(config-if)# no shutdown`	Binds the virtual Fibre Channel interface to the specified interface. Use ? to see the supported interfaces and port channels. Use the no form of this command to unbind the virtual Fibre Channel interface from the specified interface.
Step 5	`switch(config-if)# show interface vfc`	(Optional) Displays information about the virtual Fibre Channel interfaces.
Step 6	`switch(config)# copy running-config startup-config`	(Optional) Copies the running configuration to the startup configuration.

This example shows how to bind a virtual Fibre Channel interface to an Ethernet interface:

```
switch# configure terminal
switch(config)# interface vfc 4
switch(config-if)# bind interface ethernet-port-channel 513
```

This example shows how to delete a virtual Fibre Channel interface:

```
switch# configure terminal
switch(config)# no interface vfc 4
```

Creating an Implicit Virtual Fibre Channel Port Channel Interface

An implicit VFC interface is a VFC interface that has an ID with the format *slot/port*, *unit/slot/port*, or **port-channel** *id*. When this VFC is created, the ethernet interface slot/port or unit/slot/port or port-channel id is automatically (implicitly) bound to the interface. You can create a virtual Fibre Channel port channel interface that automatically binds to the port channel with the same interface number.

Before You Begin

For the Cisco MDS 9700 switches, MDS 9500 switches, and MDS 9250i switch, ensure that you create the Ethernet port channel interface before you create the virtual Fibre Channel port channel interface.

	Command	Purpose
Step 1	`switch# configure terminal` `switch(config)#`	Enters configuration mode.
Step 2	`switch(config)# interface vfc-port-channel 513` `switch(config-if)#`	Creates a virtual Fibre Channel interface (if it does not already exist) that is bound to the port channel with the same interface number and enters interface configuration mode. The default switchport mode for this interface is F. The Ethernet port channel or the channel group ID numbers range for each platforms is listed below: • Cisco MDS 9500 range is 257–4096 • Cisco MDS 9250i range is 513–4096 • Cisco MDS 9700 range is 513–4096 **Note** The MDS Ethernet port channel ID numbers range from 257 to 4096.
Step 3	`switch(config-if)# switchport mode e`	Configures the switchport mode for a virtual Fibre Channel interface. The mode is E or F. The default is F mode.
Step 4	`switch(config-if)# show interface vfc-port-channel 2`	(Optional) Displays information about the virtual Fibre Channel interfaces bound to port channel interfaces.
Step 5	`switch(config)# copy running-config startup-config`	(Optional) Copies the running configuration to the startup configuration.

Verifying the Virtual Interface

To display configuration information about virtual interfaces, perform one of the following tasks:

Command	Purpose
show interface vfc *vfc-id*	Displays the detailed configuration of the specified Fibre Channel interface.
show interface brief	Displays the status of all interfaces.
show vlan fcoe	Displays the mapping of FCoE VLANs to VSANs.

This example shows how to display a virtual Fibre Channel interface bound to an Ethernet interface:

```
switch# show interface vfc 3
vfc3 is up
    Bound interface is Ethernet1/37
    Hardware is Virtual Fibre Channel
    Port WWN is 20:02:00:0d:ec:6d:95:3f
    Admin port mode is F, trunk mode is on
    snmp link state traps are enabled
    Port mode is F, FCID is 0x490100
    Port vsan is 931
    1 minute input rate 0 bits/sec, 0 bytes/sec, 0 frames/sec
    1 minute output rate 0 bits/sec, 0 bytes/sec, 0 frames/sec
    0 frames input, 0 bytes
    0 discards, 0 errors
    0 frames output, 0 bytes
    0 discards, 0 errors
    Interface last changed at Thu May 21 04:44:42 2009
```

This example shows how to display the status of all the interfaces on the switch (some output has been removed for brevity):

```
switch# show interface brief
--------------------------------------------------------------------------------
Interface  Vsan   Admin  Admin   Status          SFP    Oper  Oper   Port
                  Mode   Trunk                          Mode  Speed  Channel
                         Mode                                (Gbps)
--------------------------------------------------------------------------------
fc3/1      1      auto   on      trunking         swl    TE      2    --
fc3/2      1      auto   on      sfpAbsent        --     --           --
...
fc3/8      1      auto   on      sfpAbsent        --     --           --
--------------------------------------------------------------------------------
Interface                Status     IP Address        Speed    MTU   Port
                                                                     Channel
--------------------------------------------------------------------------------
Ethernet1/1              hwFailure  --                --       1500  --
Ethernet1/2              hwFailure  --                --       1500  --
Ethernet1/3              up         --                10000    1500  --
...
Ethernet1/39             sfpIsAbsen --                --       1500  --
Ethernet1/40             sfpIsAbsen --                --       1500  --
--------------------------------------------------------------------------------
Interface                Status     IP Address        Speed    MTU
--------------------------------------------------------------------------------
mgmt0                    up         172.16.24.41      100      1500
--------------------------------------------------------------------------------

--------------------------------------------------------------------------------
Interface  Vsan   Admin  Admin   Status          SFP    Oper  Oper   Port
                  Mode   Trunk                          Mode  Speed  Channel
                         Mode                                (Gbps)
--------------------------------------------------------------------------------
vfc 1        1      F      --      down             --     --           --
...
```

This example shows how to display the mapping between the VLANs and VSANs on the switch:

```
switch# show vlan fcoe
VLAN      VSAN      Status
--------  --------  --------
15        15        Operational
20        20        Operational
25        25        Operational
```

```
30        30        Non-operational
```