Installing the Chassis

This chapter includes the following topics:

Installing a Rack or Cabinet

Before you install the switch, you must install a standard four-post, 19-inch EIA data center rack (or a cabinet that contains such a rack) that meets the requirements listed in Cabinet and Rack Requirements.

Step 1 Bolt the rack to the concrete subfloor before moving the chassis onto it.

Note Stability hazard. The rack stabilizing mechanism must be in place, or the rack must be bolted to the floor before you slide the unit out for servicing. Failure to stabilize the rack can cause the rack to tip over.

Statement 1048

Step 2 If the rack has bonded construction, connect it to the earth ground. This action enables you to easily ground the switch and its components and to ground your electrostatic discharge (ESD) wrist strap to prevent damaging discharges when you handle ungrounded components before installing them.

Step 3 If you need access to the source power at the rack, include either AC power receptacles or a DC power interface unit (PIU) with the amperage required by the switch that you are installing. .

If you are using DC power, be sure that the DC power supply is grounded and that there is direct access to the facility DC power or indirect access though a power interface unit (PIU). You must connect the DC power supply to the earth ground before you connect it to the facility DC power.

Note Take care when connecting units to the supply circuit so that wiring is not overloaded.

Statement 1018

Note If you are using the combined power mode or power-supply redundancy, you need only one power source. If you are using input-source redundancy or full redundancy, you need two power sources.

Unpacking and Inspecting a New Switch

Before you install a new chassis, you need to unpack and inspect it to be sure that you have all the items that you ordered and verify that the switch was not damaged during shipment. If anything is damaged or missing, contact your customer representative immediately.

Caution When you handle the chassis or its components, you must follow ESD protocol at all times to prevent ESD damage. This protocol includes but is not limited to wearing an ESD wrist strap that you connect to the earth ground.

Tip Do not discard the shipping container when you unpack the switch. Flatten the shipping cartons and store them with the pallet used for the system. If you need to move or ship the system in the future, you will need these containers.

Step 1 Compare the shipment to the equipment list that is provided by your customer service representative and verify that you have received all of the ordered items.

The shipment should include boxes for the following:

- System chassis, which includes the following installed components:
  - 1 or 2 supervisor modules
  - 1 to 16 I/O modules
  - Up to 6 fabric modules
  - 3 fan trays
  - 1 to 16 power supply units
- Switch accessory kit

  To see a list of what is included in this kit, see Accessory Kit Contents.
- Cable management frames
  - Left and right side frames
  - Top frame
  - M4 x 12 mm flat-head Phillips screws (12)
- Front door kit — Optional (N77-C7718-FDK)

- Front door (1) (69-2532-01)
- M3 x 8 mm pan-head screws (2) (48-0393-01)

- Air filter kit — Optional (N77-C7718-AFLT)
  - Air filter (1) for the front door
  - Door-side brush filters (2)
  - Cable-management frame brush filters (2)
  - M4 x 12 mm flat-head Phillips screws (12)

Step 2 Check the contents of each box for damage.

Step 3 If you notice any discrepancies or damage, send the following information to your customer service representative by email:

- Invoice number of the shipper (see the packing slip)
- Model and serial number of the missing or damaged unit
- Description of the problem and how it affects the installation

Installing the Bottom-Support Rails

The bottom-support rails support the chassis in the rack or cabinet. To maximize the stability of the rack, you must attach these rails at the lowest possible rack unit (RU). If anything lighter than the switch is already installed in the rack, you should make sure that it is positioned above where you will be installing the switch.

Warning To prevent bodily injury when mounting or servicing this unit in a rack, you must take special precautions to ensure that the system remains stable. The following guidelines are provided to ensure your safety:

- This unit should be mounted at the bottom of the rack if it is the only unit in the rack.
- When mounting this unit in a partially filled rack, load the rack from the bottom to the top with the heaviest component at the bottom of the rack.
- If the rack is provided with stabilizing devices, install the stabilizers before mounting or servicing the unit in the rack.

Statement 1006

To attach the bottom-support rails to a four-post EIA rack, follow these steps:

Before you begin

Before you can install the bottom support rails, make sure that you have done each of the following:

- Installed a four-post rack or cabinet (see Installing a Rack or Cabinet).

- Unpacked and inspected the chassis shipment.

Step 1 Position one of the two adjustable bottom-support rails at the lowest possible RU in the rack or cabinet. Adjust the length of the rail so that it stretches from the outer edges of the front and rear vertical mounting rails. You can expand the rail so that its mounting brackets are spaced between 24 to 32 inches (61.0 to 81.3 cm). See the following figure.

Figure 1: Positioning Bottom-Support Rails for a Cisco Nexus 7718 Chassis

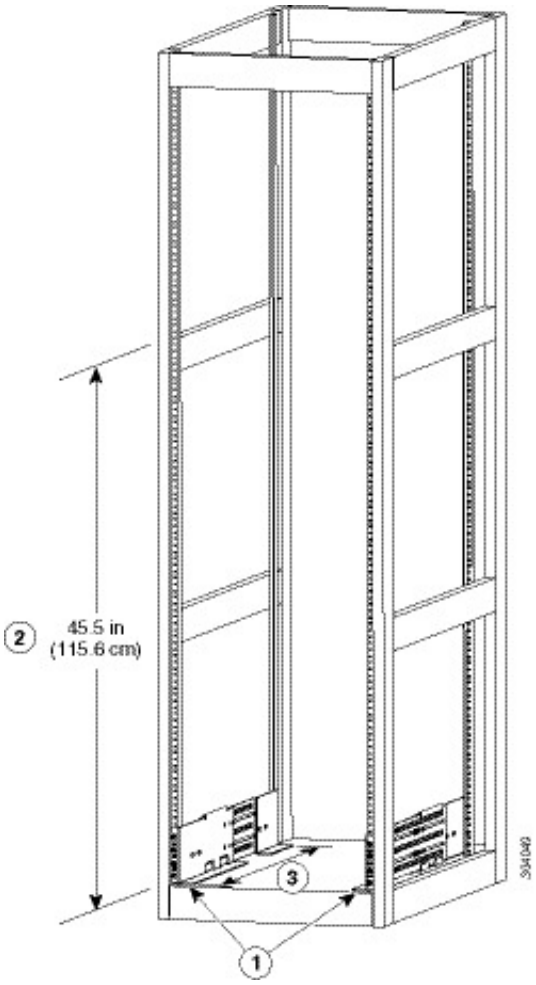

1	Position two bottom-support rails at the lowest RU on the rack.	2	Allow at least 45.5 inches (115.6 cm) (26 RU) for each Cisco Nexus 7718 chassis.

Step 2 Attach the bottom-support rail to the rack or cabinet. Use a Phillips screwdriver to screw in four M6 x 19 mm or 12-24 x 3/4 inch Phillips screws on each end of the rail (using a total of 8 screws for the rail) as shown in the following figure. Tighten each screw to 40 in. lbs (4.5 N.m) of torque.

Figure 2: Attaching Bottom-Support Rails to a Rack

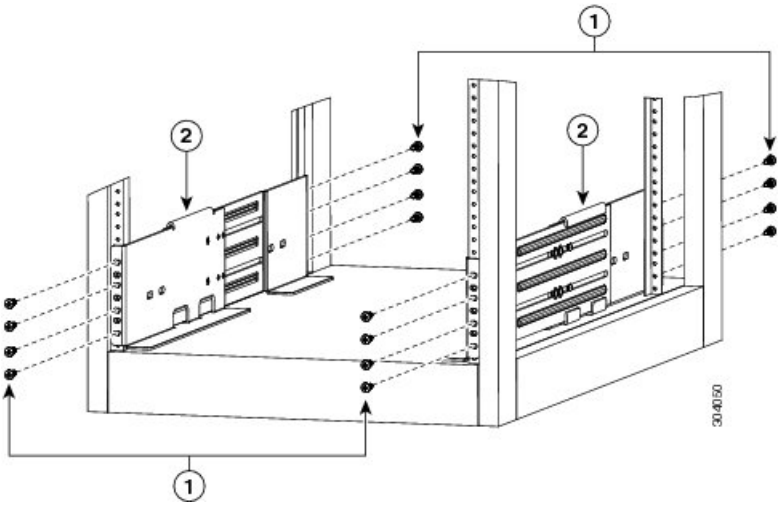

1	M6 x 19 mm (or 12-24 x 3/4 in.) Phillips screws (8 per rail)	2	Adjustable bottom-support rails (2)

Step 3 Repeat the first two steps to attach the other bottom-support rail to the other side of the rack.

Note Make sure that the two bottom-support rails are level with one another. If they are not level, adjust the higher rail down to the level of the lower rail.

What to do next

When the bottom-support rails are installed at the lowest possible RU and are level, you are ready to install the chassis in the rack or cabinet.

Installing a Chassis in a Rack or Cabinet

To move a chassis to a rack, it is necessary to slide the chassis onto a mechanical lift, use that mechanical lift to position the chassis in front of its place on the rack, slide the chassis from the lift to the rack, and then bolt the chassis to the rack. You can make the chassis easier to move if you remove the power supplies, fan trays, and fabric modules. These modules are sealed to minimize the chance of being damaged by electrostatic discharge (ESD), so you can remove them from the chassis to make the chassis easier to move.

Before you begin

- You have fully installed a rack or cabinet (see Installing a Rack or Cabinet).

Note Stability hazard. The rack stabilizing mechanism must be in place, or the rack must be bolted to the floor before you slide the unit out for servicing. Failure to stabilize the rack can cause the rack to tip over. Statement 1048

- You have installed the bottom-support rails to the lowest possible RU in the rack and there is at least 25 RU (43.75 inches [111 cm]) of space above the rails to install the chassis.
- Data center ground is accessible where you are installing the chassis.
- If there are other devices in the rack, you have arranged the heavier devices below lighter devices, and all devices are installed as low as possible with spacing left for the switch chassis.
- You have unpacked and inspected the chassis shipment for completeness and damage.
- You have the following tools and equipment:
  - Mechanical lift capable of lifting the weight of the chassis and the modules, fan trays, and power supplies installed in it. Fully loaded, the switch weighs up to 923 lb (419 kg). If you remove the units protected from ESD damage (power supplies, fan trays, and fabric modules), the maximum weight of the chassis is 586 lb (266 kg). To determine the full weight of your chassis with its modules installed (or the weight if you remove the protected modules), see Weights and Quantities for the Chassis, Modules, Fan Trays, and Power Supplies.

Caution You must use a mechanical lift to lift anything weighing over 120 pounds (55 kg).

- Number 1 Phillips-head torque screwdriver
- 18 12-24 x 3/4-inch or M6 x 19 mm Phillips screws from the bottom-support rails kit

Note You should also have at least three persons to move the chassis, which can weigh up to 923 pounds (449 kg), onto and off the mechanical lift and rack.

Warning To prevent bodily injury when mounting or servicing this unit in a rack, you must take special precautions to ensure that the system remains stable. The following guidelines are provided to ensure your safety:

- This unit should be mounted at the bottom of the rack if it is the only unit in the rack.
- When mounting this unit in a partially filled rack, load the rack from the bottom to the top with the heaviest component at the bottom of the rack.
- If the rack is provided with stabilizing devices, install the stabilizers before mounting or servicing the unit in the rack.

Statement 1006

Step 1 If you need to make the chassis as light as possible for moving, remove the following modules and place them where their connectors will not be damaged:

- Power supplies—For each power supply, press and hold the eject lever, and use the handle on the front of the power supply to pull the power supply out of the chassis.
- Fan trays—Unscrew the four captive screws, and use the two handles on the fan tray to pull the fan tray out of the chassis.
- Fabric modules—For each fabric module, keep your face at least 12 inches (30 cm) away from the modules, press both eject buttons on the front, rotate both levers away from the front of the module, use the levers to pull the module out of the chassis.

Step 2 Load the chassis onto a mechanical lift as follows:

a) Position the mechanical lift next to the shipping pallet that holds the chassis.
b) Elevate the lift platform to the level of the bottom of the chassis (or no more than 1/4 inch [0.635 cm] below the bottom of the chassis).
c) Use at least four persons to slide the chassis fully onto the lift so that the side of the chassis touches or is close to the vertical rails on the lift. Make sure that the front and rear of the chassis are unobstructed so you can easily push the chassis into the rack.

Warning To prevent personal injury or damage to the chassis, never attempt to lift or tilt the chassis using the handles on modules (such as power supplies, fans, or cards); these types of handles are not designed to support the weight of the unit. Statement 1032

Caution To lift the chassis, use a mechanical lift, not the handles on the side of the chassis (the handles are not rated for lifting over 200 pounds [91 kg]). Use the side handles for only repositioning the chassis after it is already on the mechanical lift or in the rack or cabinet.

Step 3 Use the mechanical lift to position the chassis in front of the four-post rack or cabinet and elevate the chassis to the level of the bottom-support rails or no more than 1/4 inch (0.6 cm) above the bracket.

Step 4 Make sure that the chassis is positioned with the rear (the side with the open power supply slots) ready to go into the rack or cabinet first. If necessary, you can use the two handles on either side of the chassis to move the chassis on the lift.

Step 5 Use two persons to push the chassis halfway onto the rack or cabinet and use one person to guide the chassis down the bottom-support brackets while making sure that the chassis does not get caught on any edges of the bottom support brackets.

Push only the lower front sides of the chassis—do not push on any modules and do not use any module handles to move the chassis.

Figure 3: Moving the Chassis onto a Rack or Cabinet

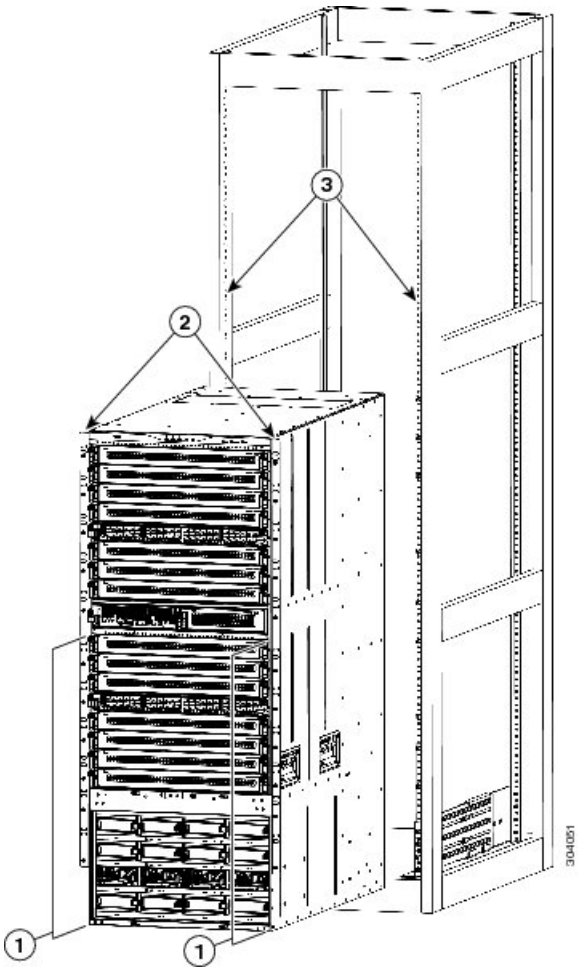

1	Push the sides of the lower half of the front side of the chassis (do not push on any of the modules or module handles).	3	Rack vertical mounting rails.
2	Chassis mounting brackets.		

Step 6 If the mechanical lift is raised above the bottom-support brackets, gently lower the lift to the level of the brackets or no more than 1/4 inch (0.6 cm) below the brackets.

This keeps the chassis level on the brackets and helps prevent the chassis from getting caught on the inside edges of the bottom-support brackets.

Step 7 Use two persons to fully push the chassis all the way onto the rack or cabinet.

You have pushed the chassis all the way when its two vertical mounting brackets come in contact with the vertical rails on the rack or cabinet.

Step 8 Align the mounting bracket on the chassis to the vertical mounting rails on the rack, and attach the chassis to the rack.

Align the screw holes in the chassis mounting brackets to the screw holes in the vertical mounting rails on the rack or cabinet. Use a Phillips screwdriver to screw in nine M6 x 19-mm or 12-24 x 3/4-inch screws in each of the two chassis mounting brackets (use a total of 18 screws for two mounting brackets). See the following figure.

Tip To adjust the placement of the chassis on the bottom-support rails, use the chassis handles shown in the following figure.

Figure 4: Attaching the Chassis to the Rack

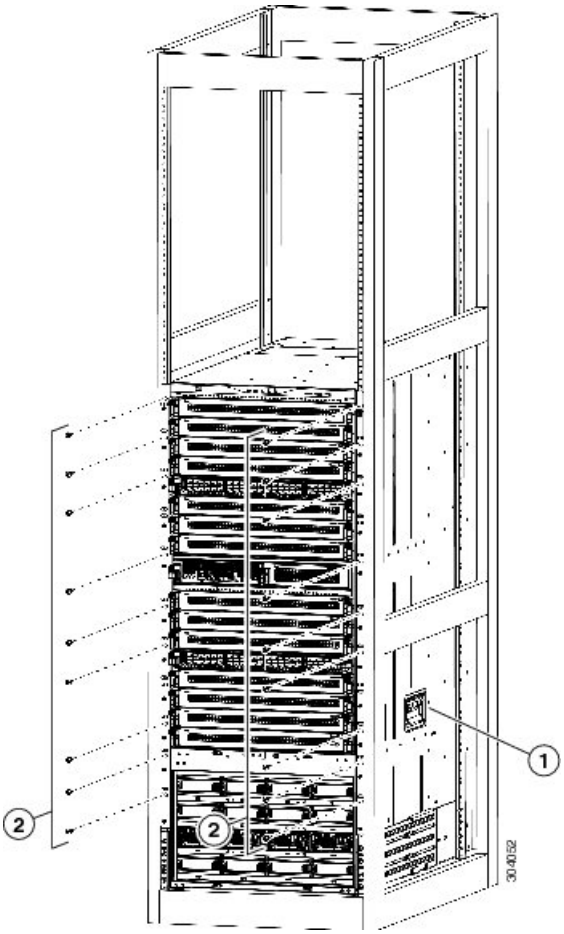

1	Handles used to adjust the chassis placement	2	Nine M6 x 19 mm or 10-24 x 3/4 in. Phillips screws used to attach each side bracket to a front mounting rail (use a total of 18 screws)

Step 9 If you removed any fabric modules before moving the chassis, replace each one in the chassis as follows:

a) Holding the front of the fabric module (the side with the LEDs), turn the module so that the front side is vertical.

Note The top of the module has an alignment bracket running from the rear to the front. The electrical connectors will be at the bottom.

b) Align the rear of the fabric module to an open fabric slot and insert the bracket on top of the module in the track at the top of the slot.

Note If there are only three fabric modules to install, install them in fabric slots 1, 3, and 5.

c) Slide the module part way into the slot.
d) Unscrew the captive screw on each of two ejector levers on the front of the module and rotate the two levers away from the module.
e) Holding the levers, slide the module all the way into the slot until it stops.
f) Simultaneously rotate both levers to the front of the module and secure them to the module by screwing their captive screws to the module. Tighten each screw to 8 in-lb (0.9 N·m).

Step 10 If you removed any fan trays before moving the chassis, reinstall each one in the chassis as follows:

a) Holding each of the two handles on the fan tray with your two hands, align the fan tray to an open fan tray slot.

Note The two alignment brackets on top of the fan tray should align to two tracks at the top of the slot.

b) Slide the fan tray into the slot until the front of the fan tray comes in contact with the rear of the chassis.

Note The two alignment pins on the fan tray (on the top and one on the bottom) should go into holes in the chassis and the four captive screws on the fan tray should align to screw holes in the chassis.

c) Screw in the four captive screws to the chassis and tighten each screw to 8 in-lb (0.9 N·m).

Step 11 If you removed any power supplies before moving the chassis, reinstall each one as follows:

a) Determine which power supply slots to fill and ensure that each of those slots is open.

If you are using the combined or power supply redundancy mode, you can use any slot for the power supply that you are installing. If you are using input-source or full redundancy mode, you must group the power supplies that are to be connected to the same grid on either the left or right power supply slots in the chassis (that is, place the power supplies for grid A in slots 1, 2, 5, or 6 and place the power supplies for grid B in slots 3, 4, 7, or 8).

b) Place one hand on the front of the power supply and place your other hand under it to support its weight.
c) Align the power supply to an open power supply slot.

Note The alignment bracket on top of the power supply should align to a track at the top of the slot and a bar at the bottom of the power supply should be guided by a track at the bottom of the slot.

d) Slide the power supply all the way into the slot until it stops.
e) Slide the handle in the middle of the ejector lever toward the end of the lever and rotate the lever to the front of the power supply. Release the middle handle.

Note The lever should grab the inside of the slot and push the power supply onto its mid plane connectors.

f) Screw in the two captive screws on the front of the power supply to the chassis. Tighten each screw to 8 in-lb (0.9 N·m).

Step 12 Connect each installed power supply with an AC power circuit as follows:

Note If you are using combined power mode (no power redundancy) or power supply (n+1) power mode, connect all of the power supplies to the same power circuit (grid). If you are using input source (n+n) or full power mode, connect half of the power supplies (located in slots 1, 2, 5, 6, 9, 10, 13, and 14) to one AC power circuit and the other half of the power supplies (located in slots 3, 4, 7, 8, 11, 12, 15, and 16) to another AC power circuit. When you connect each power supply to an AC power circuit, the LEDs on the power supply turn on. The switch can operate when each of the required power supplies have a green OUTPUT LED lit.

a) Ensure that the power supply is turned off by making sure that the power switch is set to 0.

b) Connect the power cable that shipped with the power supply to the AC power source.
c) Connect the other end of the power cable to the power supply outlet.

What to do next

After the chassis is secured to the rack, you can ground the switch.

Grounding a Switch Chassis

The switch is fully grounded as soon as you connect the chassis and the power supplies to the earth ground in the following ways:

- You connect the chassis to either a fully-bonded, grounded rack or to the data center ground.

Note The system ground, also referred to as the network equipment building system (NEBS) ground, provides additional grounding for EMI shielding requirements and for the low-voltage supplies (DC-DC converters) on the modules. This grounding system is active even when the AC and HVAC/HVDC power cables are not connected to the system.

- You connect the AC and HVAC/HVDC power supplies to the earth ground automatically when you connect an AC or HVAC/HVDC power supply to an AC or HVAC/HVDC power source.
- You connect the 6-kW DC power supplies to the earth ground before connecting the power supplies to the DC power source.

Note To comply with GR-1089, you have to bond the front industrial design (ID) doors to the ground port on the chassis using the ground braid.

The following figure shows the two sections of the Cisco Nexus 7718 front ID doors. The upper two doors are used for the I/O modules and the bottom door is used for the power supplies.

Figure 5: Front ID Door Sections

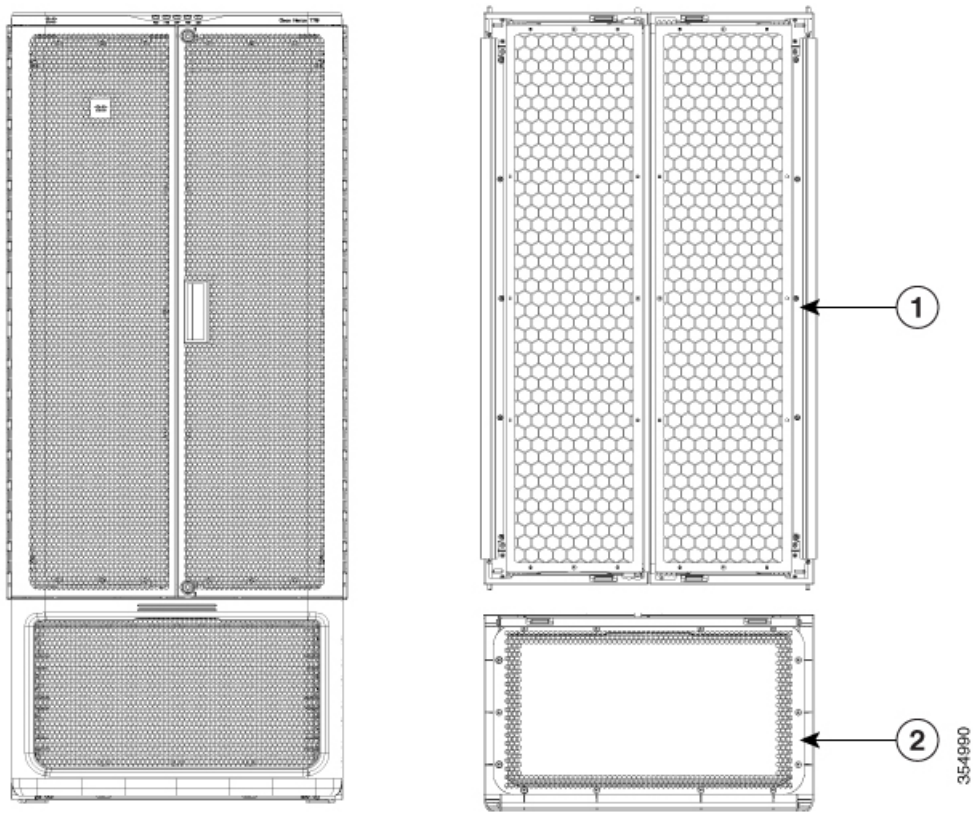

1	Doors for I/O modules	2	Door for power supplies

Before you begin

Before you can ground the chassis, you must have a connection to the earth ground for the data center building. If you installed the switch chassis into a bonded rack (see the rack manufacturer's instructions for more information) that now has a connection to the data center earth ground, you can ground the chassis by connecting its grounding pad to the rack. Otherwise, you must connect the chassis grounding pad directly to the data center ground.

To connect the switch chassis to the data center ground, you need the following tools and materials:

- Grounding lug—A two-holed standard barrel lug that supports up to 6 AWG wire. This lug is supplied with the accessory kit.
- Grounding screws—Two M4 x 8 mm (metric) pan-head screws. These screws are shipped with the accessory kit.
- Grounding wire—Not supplied with the accessory kit. This wire should be sized to meet local and national installation requirements. Depending on the power supply and system, a 12 AWG to 6 AWG copper conductor is required for U.S. installations. We recommend that you use commercially available 6 AWG wire. The length of the grounding wire depends on the proximity of the switch to proper grounding facilities.

- Number 1 manual Phillips-head torque screwdriver.
- Crimping tool to crimp the grounding wire to the grounding lug.
- Wire-stripping tool to remove the insulation from the grounding wire.

Step 1 Remove 7 screws from the front industrial design (ID) doors.

The following figure shows the 7 screws (circled) that have to be removed.

Figure 6: Front ID Door

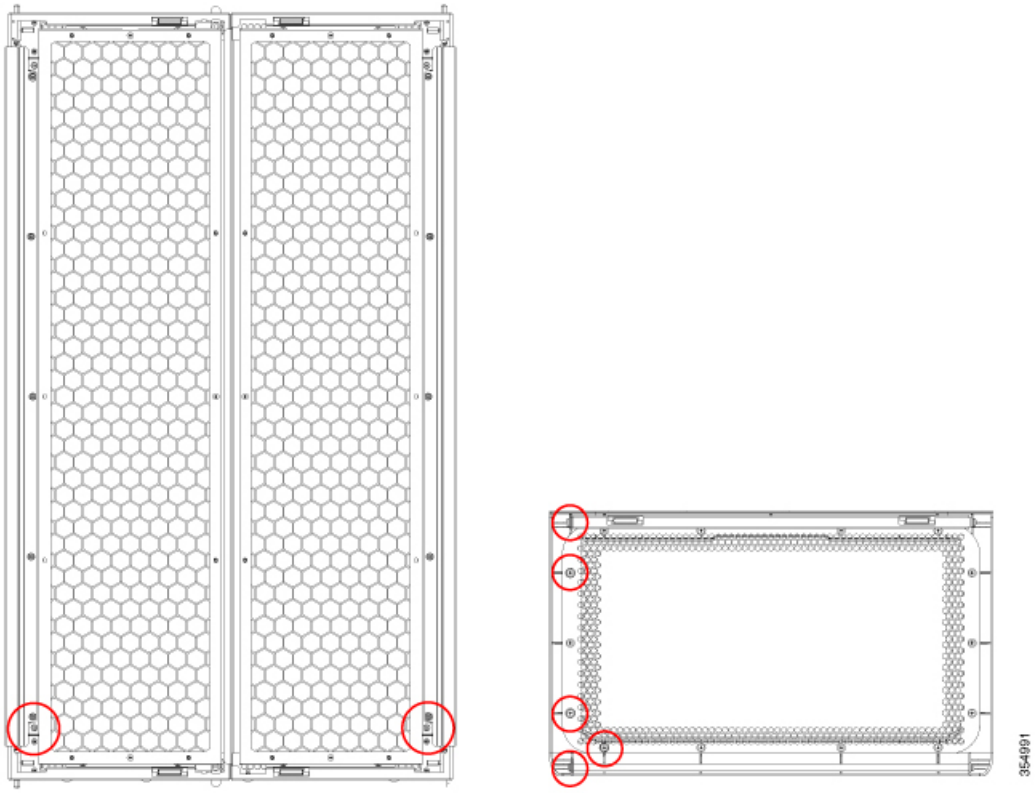

Step 2 Install grounding cables to the left side of the power supply door, as shown in the figure below, to connect the middle plate with the top and bottom hinges.

Figure 7: Grounding Cable Locations on the Door for the Power Supplies

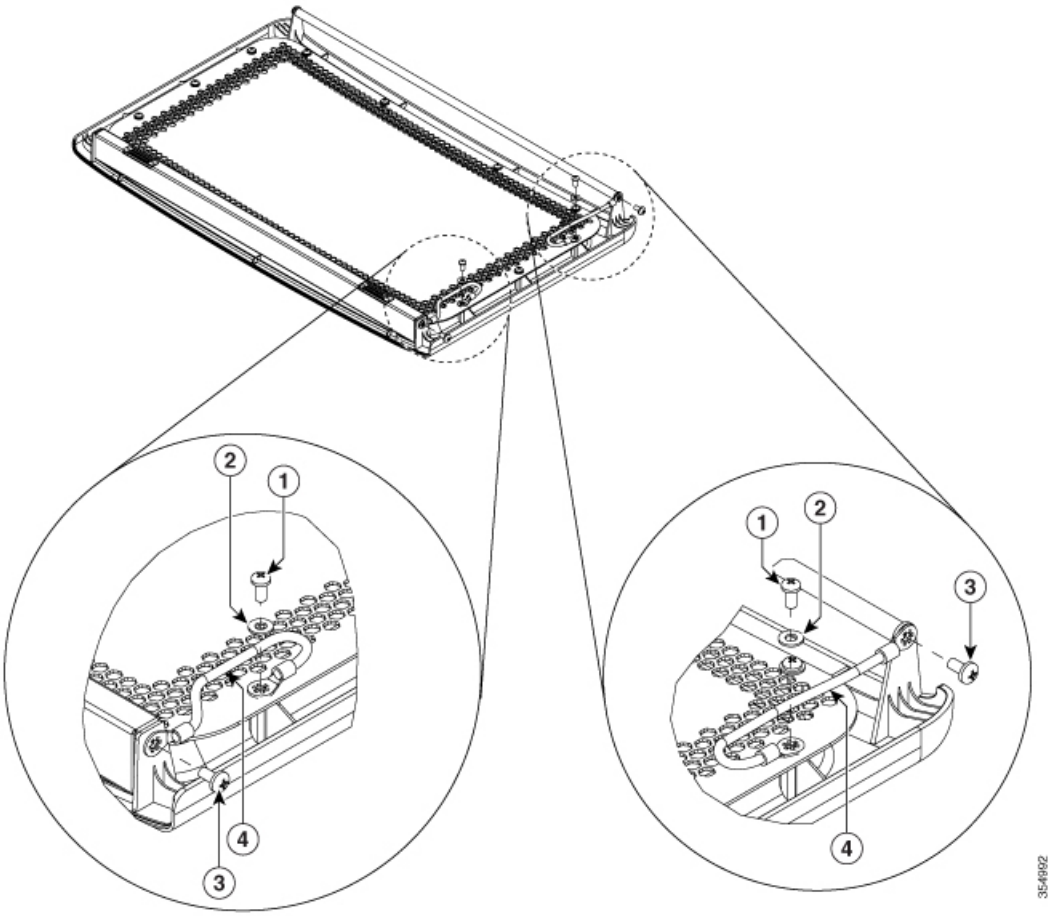

1	M4 screw	2	Flat washer
3	M4 screw	4	Grounding cable

Step 3 Tighten the screw to 7 in-lb (0.79 N-m) of torque to provide proper bonding.

Step 4 Connect the grounding cable from the door for the power supplies to the switch chassis, as shown in the figure below.

Figure 8: Grounding Cable Location between the door for the Power Supplies and the Cisco Nexus 7718 switch chassis

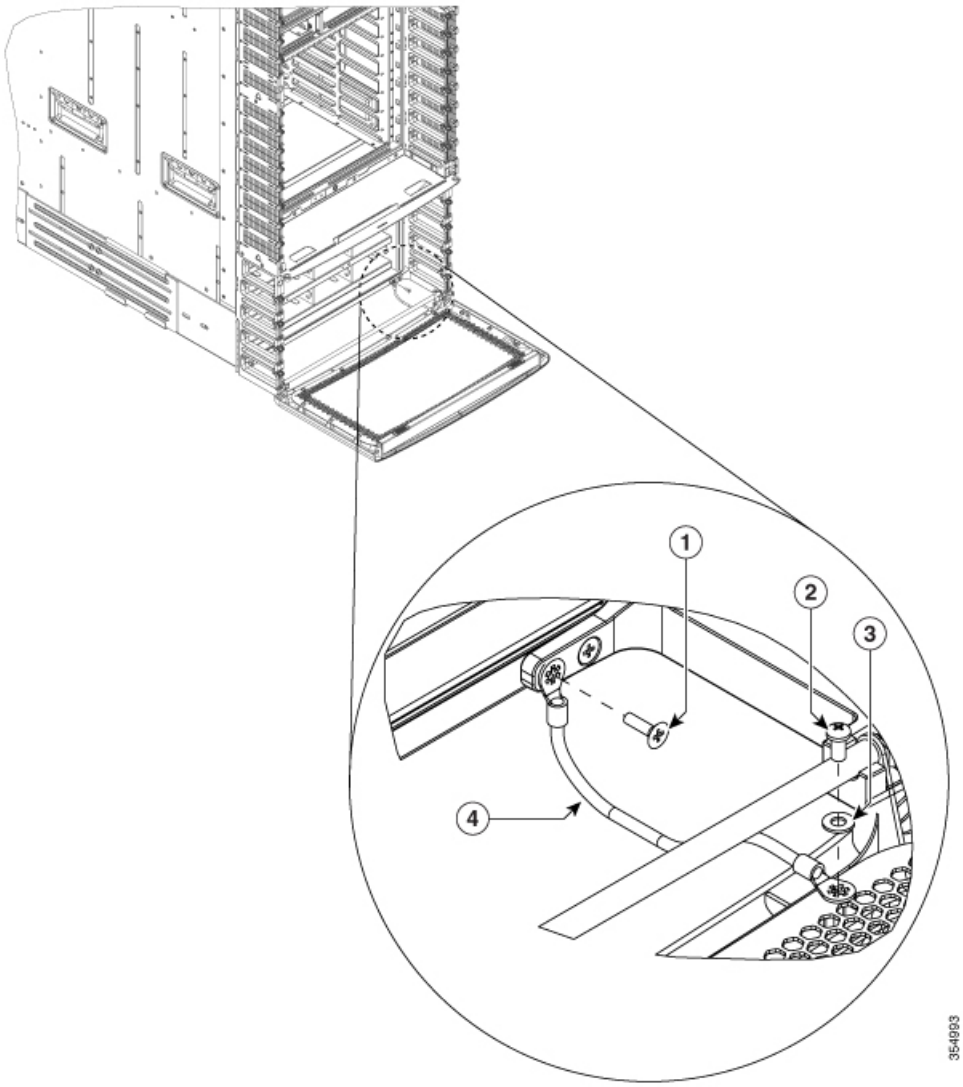

1	M4 screw	2	M4 screw
3	Flat washer	4	Grounding cable

Step 5 Install a grounding cable between the left hand side door for the I/O modules and the switch chassis, as shown in the figure below. Repeat the procedure for installing a grounding cable between the right hand side door for the I/O modules and the switch chassis.

Figure 9: Grounding Cable Location between the Left Hand Side Door for the I/O Modules and the Cisco Nexus 7718 Switch Chassis

Note The grounding cable location for installing the grounding cable between the right hand side door for the I/O modules and the Cisco Nexus 7718 switch chassis will be mirrored on the right hand side of the switch.

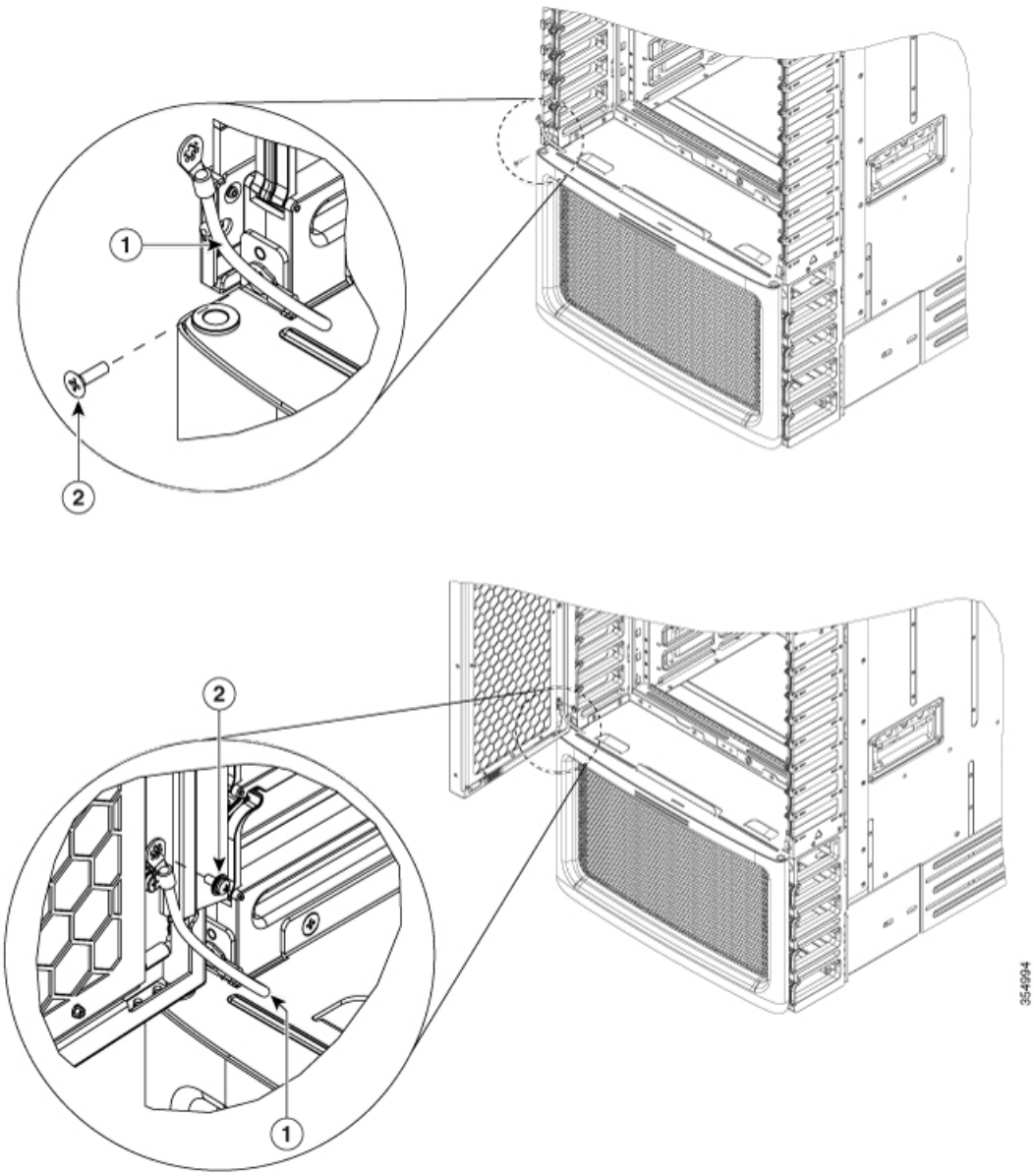

1	Grounding cable	2	M4 screw

Step 6 Apply the star ring terminal end of the grounding cables to the front ID doors.

Step 7 Connect the other round terminal of the grounding cable to the ground port on the chassis, as shown in Figure 9: Grounding Cable Location between the Left Hand Side Door for the I/O Modules and the Cisco Nexus 7718 Switch Chassis, on page 15. Tighten the M4 screw to 9 to 12 in-lb (1.01 to 1.35 N-m) of torque.

Installing Cable Management Frames

You install the middle cable management frame and then install the lower and upper frames on the middle frame. After installing the cable management frames on the left and right sides of the front of the chassis, you install the top hood, and then tighten the screws holding all the frames to the chassis.

If you are installing the optional front doors on the chassis, you must have the cable management frames already installed because they hold the front doors to the chassis.

Before you begin

- The chassis is installed and secured to the rack or cabinet.
- You have the following tools and equipment:
  - Phillips torque screwdriver (customer supplied).
  - Following frames and screws (shipped with the switch):
    - Two cable management upper side frames
    - Two cable management middle side frames
    - Two cable management lower side frames
    - One cable management top hood frame
    - 36 M4 x 13-mm, flat-head, Phillips screws

Step 1 Attach the middle cable management frames as follows:

a) Align the four screw holes in a middle cable management frame to four screw hole standoffs on one of two brackets attached to the front of the chassis (see the following figure).

Figure 10: Attaching the Middle Cable Management Frame to the Chassis

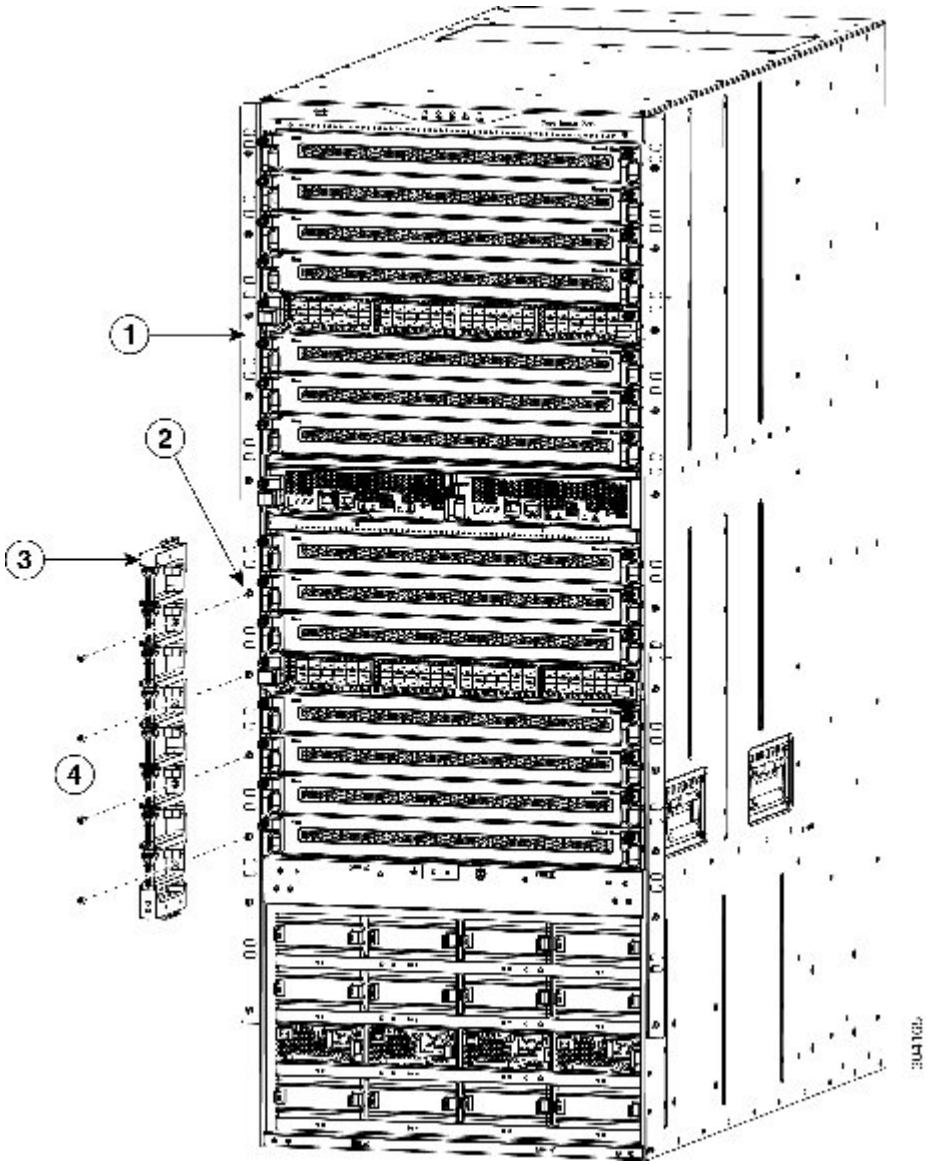

1	Chassis mounting bracket	3	Middle cable management frame with four screw holes
2	Four screw-hole standoffs on the chassis mounting bracket	4	Four M4 x 13 mm screws that secure the middle cable management frame to the chassis mounting bracket

b) Use four M4 x 13 mm screws to attach the frame to the bracket. Do not tighten the screws.

c) Repeat steps 1a and 1b to attach the other middle cable management frame to the other side of the chassis.

Step 2 Attach the lower cable management frames as follows:

a) Position a lower cable management frame below the installed middle cable management frame and slide the lower frame onto the flange at the bottom of the middle frame.

Verify that the two angle brackets on the frame are touching the front of the chassis and that the screw holes in the brackets align with screw holes in the chassis. If not, remove this frame and replace it with the other lower frame.

Figure 11: Attaching a Lower Cable Management Frame to the Chassis

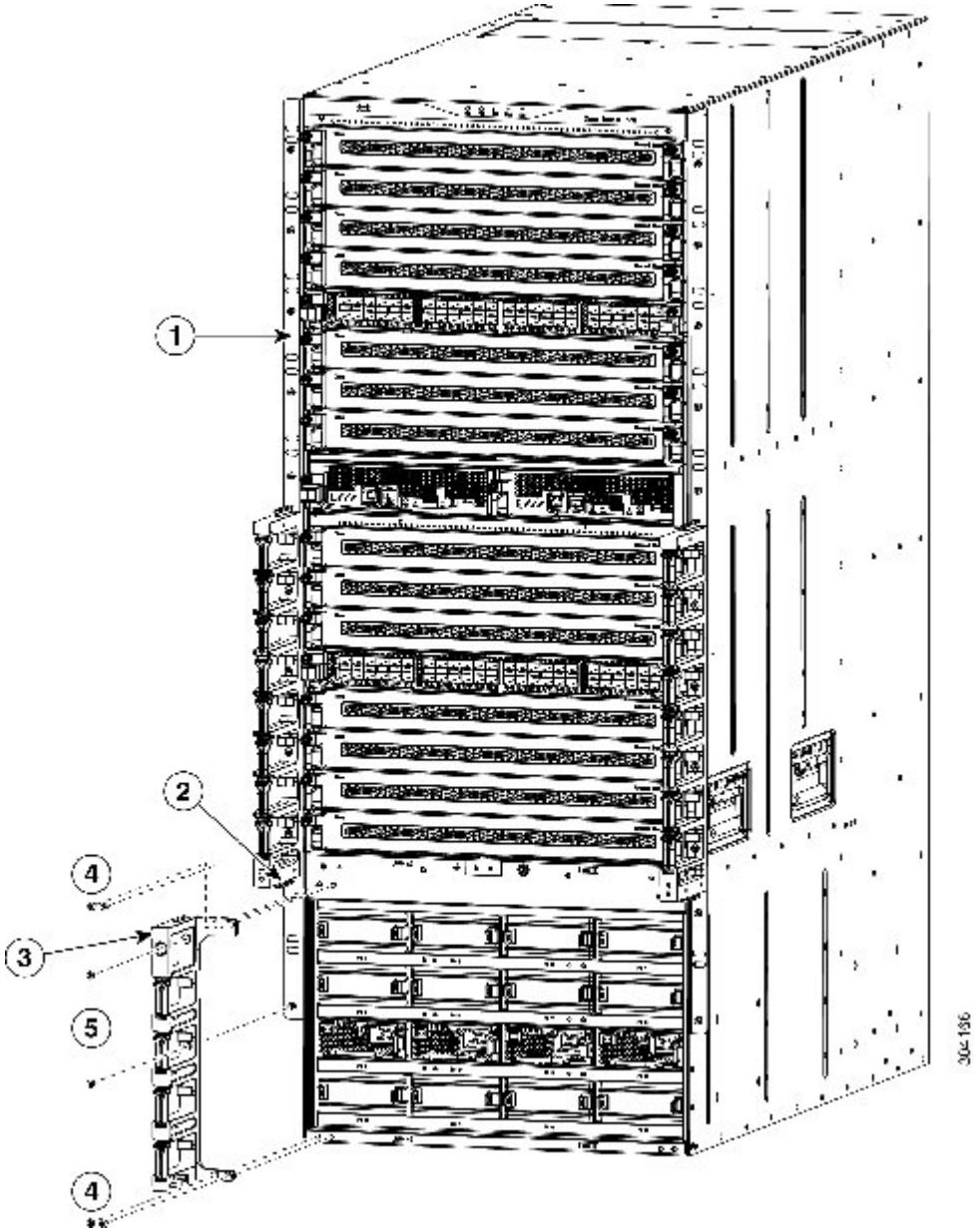

1	Chassis mounting bracket	4	Two M4 x 13 mm screws to secure an angle bracket to the chassis
2	Alignment flange on the middle cable management frame	5	Two M4 x 13 mm screws to secure the frame to the chassis mounting bracket

3	Middle cable management frame with alignment groove on top, two screw holes, and two angle brackets with two screw holes each		

b) Use two M4 x 13 mm screws to attach the frame to the vertical chassis mounting bracket. Do not tighten the screws.
c) Use two M4 x 13 mm screws to attach each of the two angle brackets to the chassis (total of four screws). Do not tighten the screws.
d) Repeat steps 2a, 2b, and 2c to attach the other lower cable management frame to the other side of the chassis.

Step 3 Attach the upper cable management frames as follows:

a) Position the upper cable management frame above the installed middle cable management frame and slide the upper frame onto the flange on the top of the middle frame (see the following figure).

   Verify that the five screw holes on the frame align with five screw-hole standoffs on the chassis mounting bracket.

Figure 12: Attaching an Upper Cable Management Frame to the Chassis

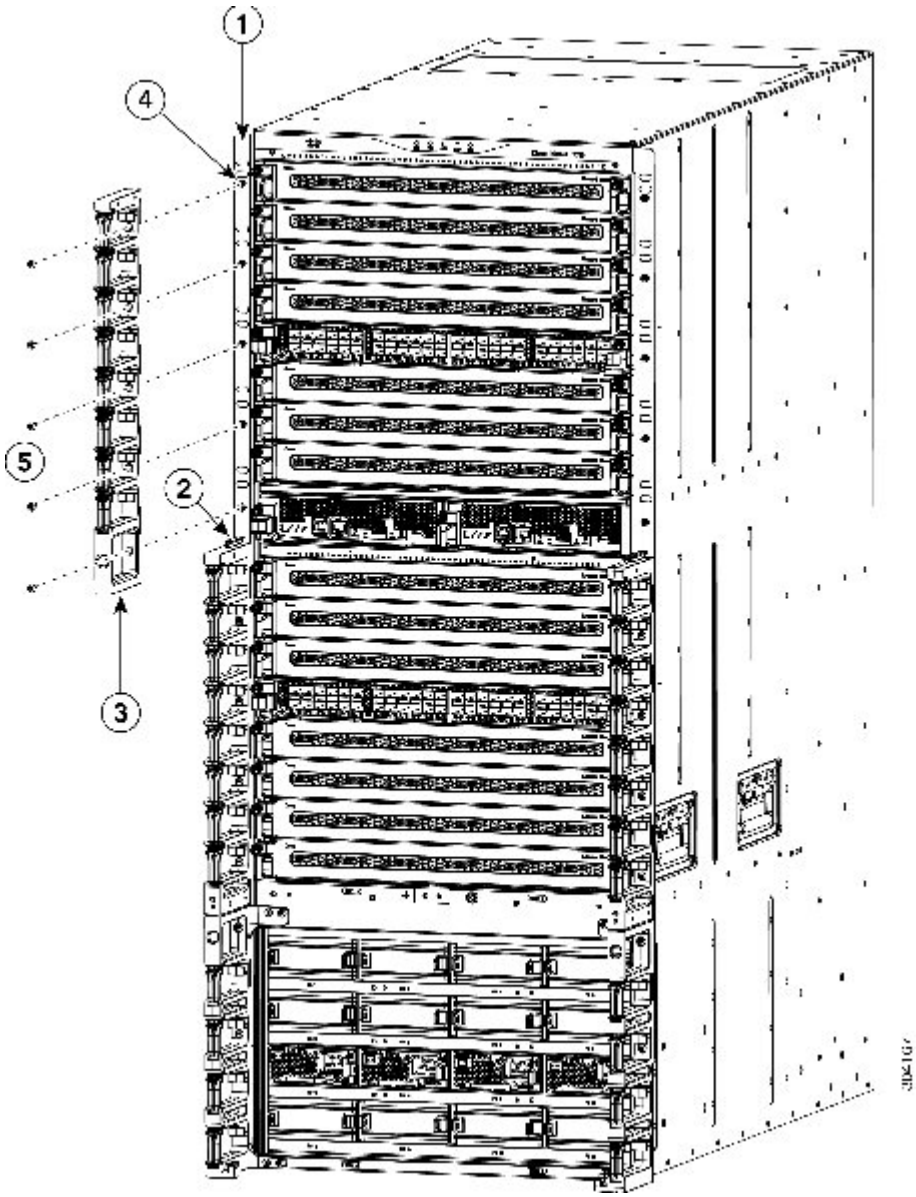

1	Chassis mounting bracket	4	Screw hole standoff (5)
2	Alignment flange on the middle cable management frame	5	Five M4 x 13 mm screws to secure the frame to the chassis mounting bracket
3	Upper cable management frame with five screw holes and an alignment groove on the bottom		

b) Use five M4 x 13 mm screws to attach the frame to the bracket. Do not tighten the screws.
c) Repeat steps 3a and 3b to attach the other upper cable management frame to the other side of the chassis.

Step 4 Attach the top hood to the cable management frames and chassis as follows:

a) Set the top hood, with its angle brackets pointing downward, on top of the two upper cable management frames. Verify that the two alignment pins on the back side of the hood are aligned with two holes on the top of the chassis (see Callouts 2 and 3 in the following figure).

Figure 13: Attaching the Top Hood Cable Management Frame to the Chassis

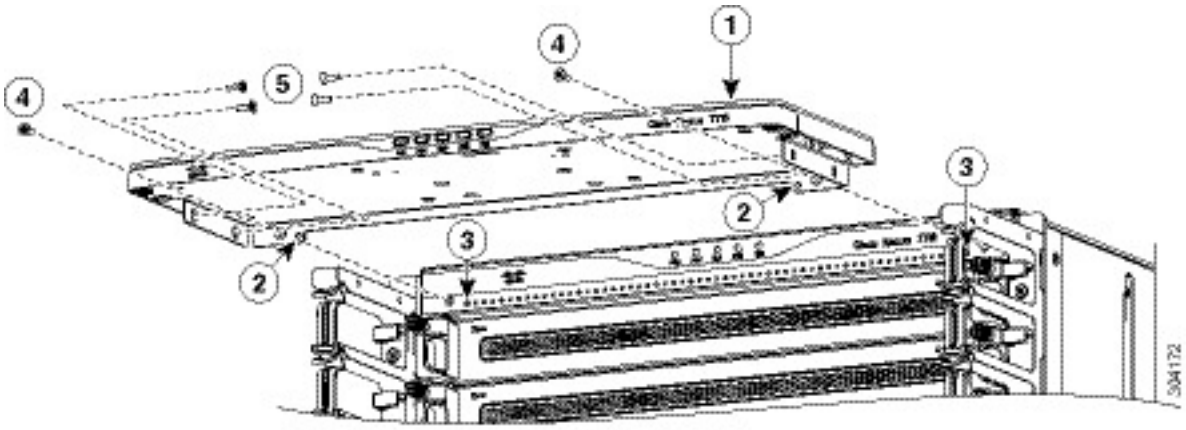

1	Top hood cable management frame	4	M4 x 13 mm screw (2) to secure the top hood to the chassis
2	Alignment pins on the back side of the top hood frame	5	Four M4 x 13 mm screws (two per side) to secure top hood to each upper cable management frame
3	Align holes in the chassis		

b) Slide the hood toward the chassis so that the alignment pins enter the two holes. Verify that two holes on each side of the angle bracket align to two screw holes on the cable management frames and a screw hole on each side of the back angle bracket aligns with a screw hole on the chassis.

c) Use two M4 x 13 mm screws to attach the top hood to the chassis (see Callout 4 in the previous figure).

d) Use two M4 x 13 mm screws to attach each side of the top hood to the two side cable management frames (4 screws total—see Callout 5 in the previous figure). Do not tighten the screws.

e) Tighten each of the six top-hood screws to 11 to 15 in-lb (1.2 to 1.7 N·m) of torque.

Step 5 Tighten each of the 30 cable-management side-frame screws to 11 to 15 in-lb (1.2 to 1.7 N·m) of torque.

What to do next

You are ready to attach the optional front doors to the cable management frames.

Installing the Front Doors

You can optionally install the following doors on the chassis:

- Two locking doors to cover the supervisor and I/O modules
- One door to cover the power supplies

To install the doors, you must first install a divider bracket that holds the bottoms of the two front doors and provides the door stop for the power supply door. If you also install air filters, this bracket also prevents air particulates from entering the air intakes of the supervisors and I/O modules from the power supply area.

You must also install a metal door stop on the bottom of the top hood of the cable management frames. This door stop provides a metallic surface for magnets in the front doors to hold onto when closed.

If you ordered the air filter kit, you can also install air filters on the two front doors and on the cable management frames while installing the front doors on the chassis.

Note To route cables through the cable management frames to the I/O modules, it is easiest to either do that before you add the front doors or to remove the front doors temporarily.

Before you begin

Verify the following before installing the front doors:

- Cable management frames are installed on the chassis
- You have the following tools and equipment:
  - Front door kit (N77-C7718-FDK=) with the following undamaged components:
    - Left door (1 piece, part number 800-39049-01)
    - Right door (1 piece, part number 800-39048-01)
    - Power supply door (1 piece, part number 800-39049-01)
    - Divider bracket (1 piece, part number 800-39233-01)
    - Door stop bracket (1 piece, part number 700-39993-01)
    - M4 x 13 mm pan-head Phillips screws (10 pieces, part number 48-3151-01)
  - If you are also installing air filters, you must have the air filter kit available.
  - Phillips screwdriver with torque capability

Caution Use only torque-capable, manually-operated screwdrivers. Do not use powered drivers, which can over tighten and damage screws, nor use magnetic drivers, which can damage nearby electronics.

Step 1 Install the divider bracket between the left and right cable management frames as follows:

a) Position the divider bracket at the bottom of the left and right middle cable management frames (at the bottom of the supervisor and I/O module area of the chassis) so that the two screw holes in each side of the bracket align to two screw holes at the bottom of the left and right middle cable management frames (see the following figure).

Four screw holes on the upper back of the bracket should also align to four screw holes in the chassis.

Figure 14: Installing the Divider Bracket

1	Position the divider bracket at the bottom of the middle cable management frame and align eight screw holes in the bracket to eight screw holes in the cable management frames (two holes in each frame) and chassis (4 holes in the chassis).	2	Fasten the bracket to the cable management frames and chassis with eight M4 x 13 mm screws. Tighten each screw to 11.5 to 15 in-lbs (1.3 to 1.7 N·m).

b) Screw in eight M4 x 13 mm screws to hold this bracket to the bottom of the left middle cable management bracket (two screws), the bottom of the right middle cable management bracket (two screws), and the chassis (four screws). Tighten each screw to 11.5 to 15 in-lbs (1.3 to 1.7 N·m).

Step 2 If you also have an air filter kit, install six air filters on the front doors and cable management frames as explained in Installing the Air Filters, on page 25

Step 3 Install the door-stop bracket on the top hood of the cable management frames as follows:

a) Position the door-stop bracket under the top hood frame so that its two screw holes align to two screw holes in the top hood (see the following figure).

Be sure that there is a perpendicular edge facing the front. This edge stops the front doors and provides a metallic surface for the magnets in the door to hold onto when closed.

Figure 15: Installing the Door-Stop Bracket

1	Top hood frame with two screw holes on its bottom side	3	Align the two screw holes in the bracket with two screw holes in the top hood. Fasten with two M4 x 13 mm screws.
2	Door-stop bracket with two screw holes.		

b) Screw in two M4 x 13 mm screws to hold this bracket to the top hood. Tighten each screw to 11.5 to 15 in-lbs (1.3 to 1.7 N·m).

Step 4 Install the two front doors to the supervisor and I/O module area as follows:

a) On the back side (open side) of one door, pull in on two protruding spring pins so that the pins are held inside the door frame (see the following figure). Hold these two pins in through the next step.

Figure 16: Installing a Front Door Over the Supervisor and I/O Module Area

1	Front door with its open side facing the front of the chassis (optionally, you can install an air filter in the open cavity in the door).	4	Pull the handles for each of two spring pins toward the center of the door and hold the pins in place.
2	Pin hole in the top hood	5	Align the spring pins to holes in the top hood and divider bracket.
3	Pin hole in the divider bracket	6	Release the pins so that they spring into the holes in the top hood and divider bracket.

b) Position the door with the back (open) side facing the front of the chassis and the two held spring pins aligned to two holes in the top hood and divider bracket as shown in the previous figure.

c) Release the two spring pins so that they insert into the holes in the top hood and divider brackets.

The door should freely swing on the spring pins.

d) Close the door to cover half of the supervisor and I/O module area.

Magnets in the door will hold the door shut to the door-stop bracket on the top hood and to the divider bracket.

e) Repeat Steps 4a through 4d to install the other front door.

Step 5 Install the door in front of the power supply area as follows:

a) Position the door to the power supply area so that its two bars on the backside are resting on two holders protruding from the left and right power supply cable management frames as shown in the following figure.

Figure 17: Positioning the Power Supply Door on the Chassis

1	Rest the two bars on the door door holder brackets (on the bottoms of the left and right cable management frams).	2	Rotate the top of the door to the metallic door stop on the divider bracket.	

b) Rotate the top of the door to the divider bracket installed on the cable management frames.

The magnets on the door hold the door to the divider bracket.

Installing the Air Filters

You can optionally install six air filters on the two front doors and the left and right cable management frames. These air filters significantly reduce the air particulates that can enter into the air intakes for the supervisor and I/O modules.

If you have not already installed the front doors, see Installing the Front Doors, on page 22 for instructions on how to install the air filters on the front doors before installing the doors. Otherwise, use these instructions to install the air filters on the already installed front doors.

Before you begin

- Cable management frames are fully installed on the chassis
- Front doors are either installed on the chassis (if the front doors are ready to be installed on the chassis, see Installing the Front Doors, on page 22.

Step 1 Install two door filters and two door-side filters on the two front doors as follows:

a) Remove one of the two front doors by pulling in on both of the two spring pins holding the door to the top hood and divider frames, and set the door down on its front side.

The hollowed side of the door faces up.

b) Align the six alignment holes on the largest filter to six alignment studs on the open side of the door as shown in the following figure.

Figure 18: Aligning a Door Filter to a Door

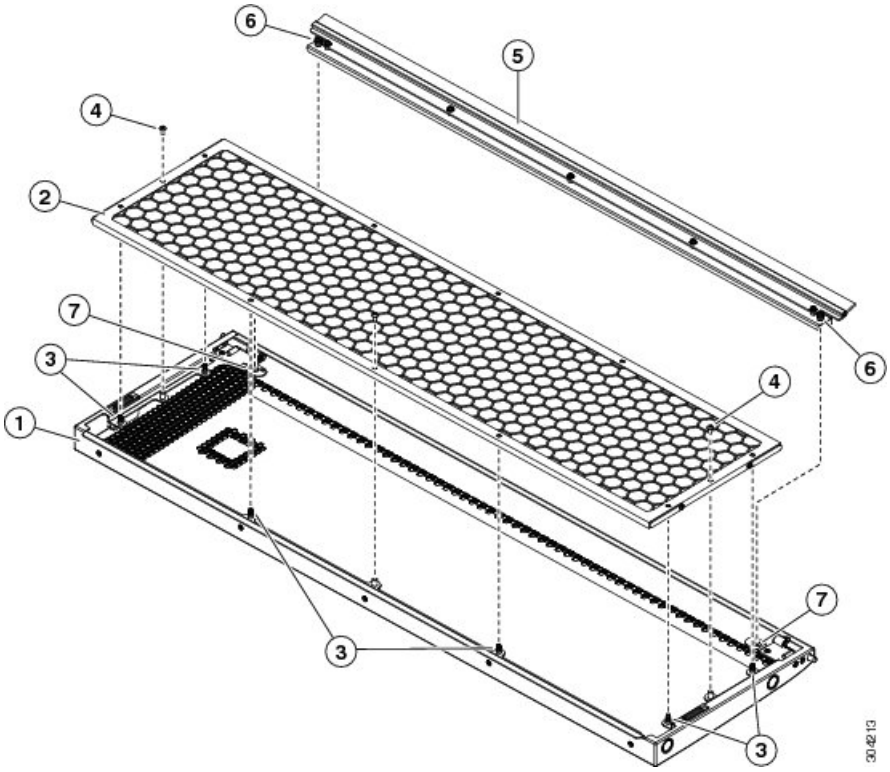

1	Front door, back side facing up	5	Air filter for the side of the door
2	Air filter for inside of door	6	Captive screws (one on each end)
3	Alignment pins (two on the top, side, and bottom of the door	7	Screw hole for captive screw on filter
4	Screws (3) used to secure filter to the door		

c) Press the filter onto the alignment studs and use two __ x __ mm screws to secure the filter to the door.

d) Reattach the door to the chassis by pulling in its two spring pins, inserting the door edge between the top hood and the divider bracket on the cable management frames. When each spring pin is aligned to a hole in the front corner of the top hood, release that spring pin so that it goes into that hole. When both spring pins are released and the door can swing open and closed, the door is remounted.

e) Repeat Steps 1a through 1d once for the other side door.

Step 2 Install the two cable-management filters on the left and right cable management frames as follows:

a) Align the five screw holes in one of the two cable management air filters to five screw holes in one of the upper cable management frames as shown in the following figure.

Figure 19: Attaching a Cable-Management Frame Air Filter

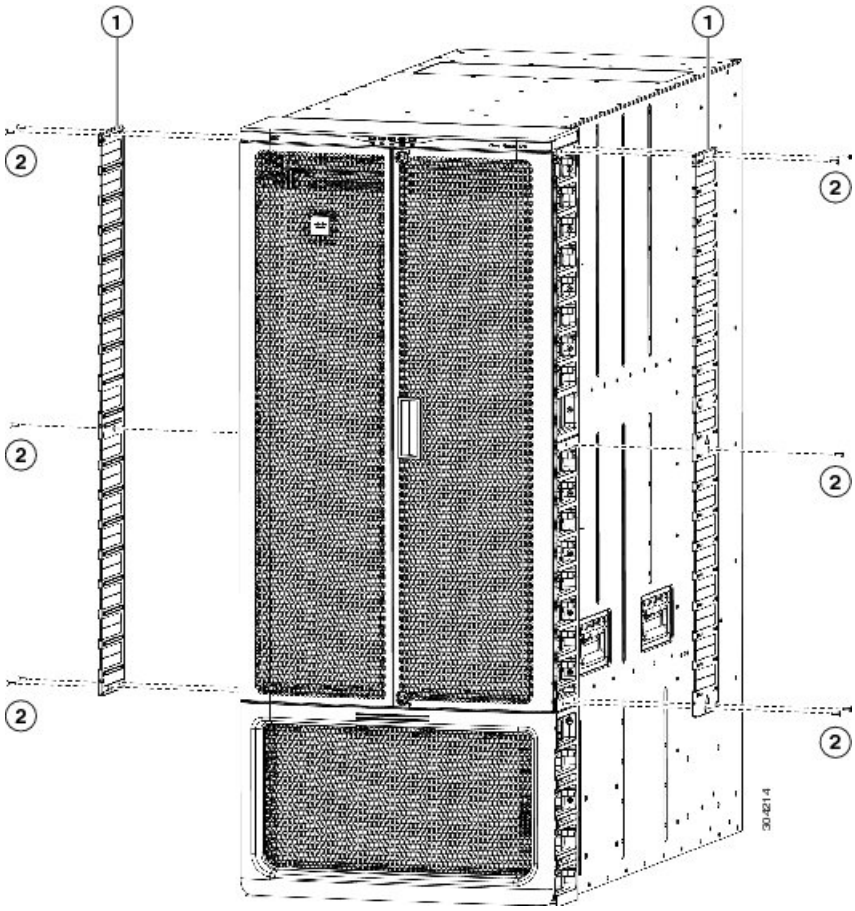

1	Air filter for cable management frame	2	Five M3 x 13 mm screws for each air filter

b) Secure the air filter to the cable management frame using five M3 x 13 mm screws and tighten to 5 to 7 in-lb (0.56 to 0.79 N·m) of torque.

c) Repeat Steps 2a and 2b to attach the remaining cable-management air filter.