Maintaining Cisco CSP 2100

This chapter describes how to diagnose system problems using LEDs. It also provides information about how to install or replace hardware components, and it includes the following sections:

Cisco CSP 2100 Monitoring and Management Tools

Cisco Integrated Management Interface

You can monitor the Cisco CSP 2100 inventory, health, and system event logs by using the built-in Cisco Integrated Management Controller (CIMC) GUI or CLI interfaces. The procedure to monitor the Cisco CSP 2100 inventory, health, and system event logs is similar to that used for the Cisco UCS C-Series servers. See the user documentation for your firmware release at the following URL:

http://www.cisco.com/en/US/products/ps10739/products_installation_and_configuration_guides_list.html

Cisco CSP 2100 Configuration Utility

The Configuration Utility for Cisco CSP 2100 can aid and simplify the following tasks:

- Monitoring server inventory and health
- Diagnosing common server problems with diagnostic tools and logs
- Setting the BIOS booting order
- Configuring some RAID configurations
- Installing operating systems

You can download the ISO image from Cisco.com. See the user documentation for your version of the utility at the following URL:

http://www.cisco.com/en/US/products/ps10493/products_user_guide_list.html

Status LEDs and Buttons

This section describes the location and meaning of LEDs and buttons and includes the following topics

Front Panel LEDs

Figure 3-1 shows the front panel LEDs. Table 3-1 defines the LED states.

Figure 3-1 Front Panel LEDs

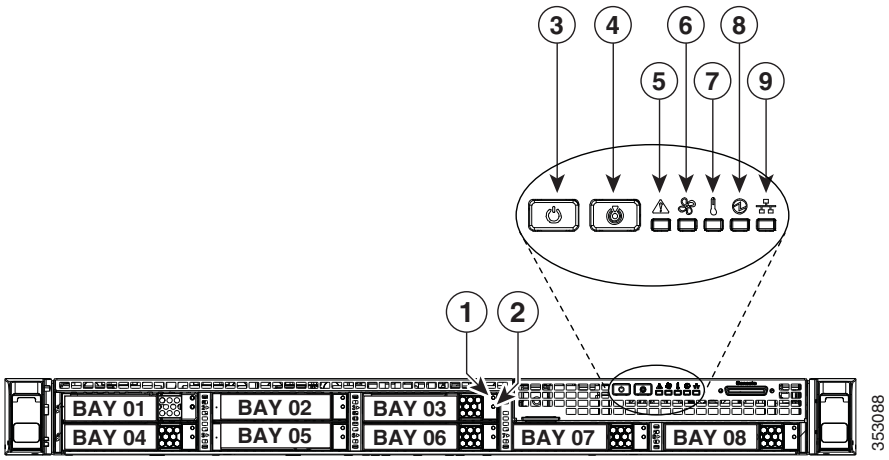

1	Hard drive fault LED	**6**	Fan status LED
2	Hard drive activity LED	**7**	Temperature status LED
3	Power button/power status LED	**8**	Power supply status LED
4	Identification button/LED	**9**	Network link activity LED
5	System status LED		

Table 3-1 Front Panel LEDs, Definitions of States

	LED Name	State
1	Hard drive fault	• Off—The hard drive is operating properly. • Amber—Drive fault detected. • Amber, blinking—The device is rebuilding. • Amber, blinking with one-second interval—Drive locate function activated.
2	Hard drive activity	• Off—There is no hard drive in the hard drive tray (no access, no fault). • Green—The hard drive is ready. • Green, blinking—The hard drive is reading or writing data.

Table 3-1 Front Panel LEDs, Definitions of States (continued)

	LED Name	State
3	Power button/LED	• Off—There is no AC power to the Cisco CSP 2100. • Amber—The Cisco CSP 2100 is in standby power mode. Power is supplied only to the CIMC and some motherboard functions. • Green—The Cisco CSP 2100 is in main power mode. Power is supplied to all Cisco CSP 2100 components.
4	Unit identification	• Off—The unit identification function is not in use. • Blue—The unit identification function is activated.
5	System status	• Green—The Cisco CSP 2100 is running in normal operating condition. • Green, blinking—The Cisco CSP 2100 is performing system initialization and memory check. • Amber, steady—The Cisco CSP 2100 is in a degraded operational state. For example: – Power supply redundancy is lost. – CPUs are mismatched. – At least one CPU is faulty. – At least one DIMM is faulty. – At least one drive in a RAID configuration failed. • Amber, blinking—The Cisco CSP 2100 is in a critical fault state. For example: – Boot failed. – Fatal CPU and/or bus error is detected. – Cisco CSP 2100 is in an over-temperature condition.
6	Fan status	• Green—All fan modules are operating properly. • Amber, steady—One or more fan modules breached the critical threshold. • Amber, blinking—One or more fan modules breached the non-recoverable threshold.
7	Temperature status	• Green—The Cisco CSP 2100 is operating at normal temperature. • Amber, steady—One or more temperature sensors breached the critical threshold. • Amber, blinking—One or more temperature sensors breached the non-recoverable threshold.
8	Power supply status	• Green—All power supplies are operating normally. • Amber, steady—One or more power supplies are in a degraded operational state. • Amber, blinking—One or more power supplies are in a critical fault state.
9	Network link activity	• Off—The Ethernet link is idle. • Green—One or more Ethernet LOM ports are link-active, but there is no activity. • Green, blinking—One or more Ethernet LOM ports are link-active, with activity.

Rear Panel LEDs and Buttons

Figure 3-2 shows the rear panel LEDs and buttons. Table 3-2 defines the LED states.

Figure 3-2 Rear Panel LEDs and Buttons

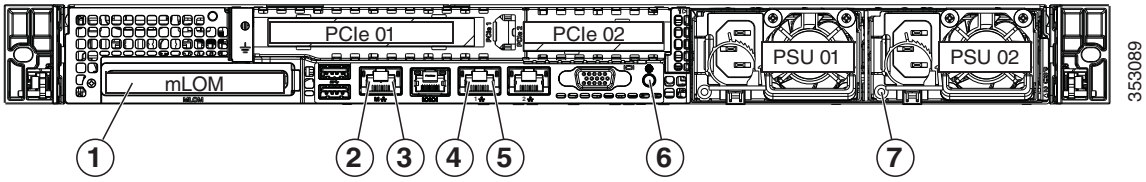

1	Optional mLOM card LEDs (not shown, see Table 3-2)	**5**	1-Gb Ethernet link status LED
2	1-Gb Ethernet dedicated management link status LED	**6**	Rear unit identification button/LED
3	1-Gb Ethernet dedicated management link speed LED	**7**	Power supply status LED
4	1-Gb Ethernet link speed LED		

Table 3-2 Rear Panel LEDs, Definitions of States

	LED Name	State
1	Optional mLOM 10-Gb SFP+ (there is a single status LED)	• Off—No link is present. • Green, steady—Link is active. • Green, blinking—Traffic is present on the active link.
1	Optional mLOM 10-Gb BASE-T link speed	• Off—Link speed is 10 Mbps. • Amber—Link speed is 100 Mbps/1 Gbps. • Green—Link speed is 10 Gbps.
1	Optional mLOM 10-Gb BASE-T link status	• Off—No link is present. • Green—Link is active. • Green, blinking—Traffic is present on the active link.
2	1-Gb Ethernet dedicated management link speed	• Off—Link speed is 10 Mbps. • Amber—Link speed is 100 Mbps. • Green—Link speed is 1 Gbps.
3	1-Gb Ethernet dedicated management link status	• Off—No link is present. • Green—Link is active. • Green, blinking—Traffic is present on the active link.
4	1-Gb Ethernet link speed	• Off—Link speed is 10 Mbps. • Amber—Link speed is 100 Mbps. • Green—Link speed is 1 Gbps.

Table 3-2 Rear Panel LEDs, Definitions of States (continued)

	LED Name	State
5	1-Gb Ethernet link status	• Off—No link is present. • Green—Link is active. • Green, blinking—Traffic is present on the active link.
6	Rear unit identification	• Off—The unit identification LED is not in use. • Blue—The unit identification LED is activated.
7	Power supply status	AC power supplies: • Off—No AC input (12 V main power off, 12 V standby power off). • Green, blinking—12 V main power off; 12 V standby power on. • Green, solid—12 V main power on; 12 V standby power on. • Amber, blinking—Warning detected but 12 V main power on. • Amber, solid—Critical error detected; 12 V main power off.

Internal Diagnostic LEDs

The Cisco CSP 2100 has internal fault LEDs for CPUs, DIMMs, fan modules, SD cards, the RTC battery, and the mLOM card. These LEDs are available only when the Cisco CSP 2100 is in standby power mode. An LED lights amber to indicate a faulty component.

See Figure 3-3 for the locations of these internal LEDs.

Figure 3-3 Internal Diagnostic LED Locations

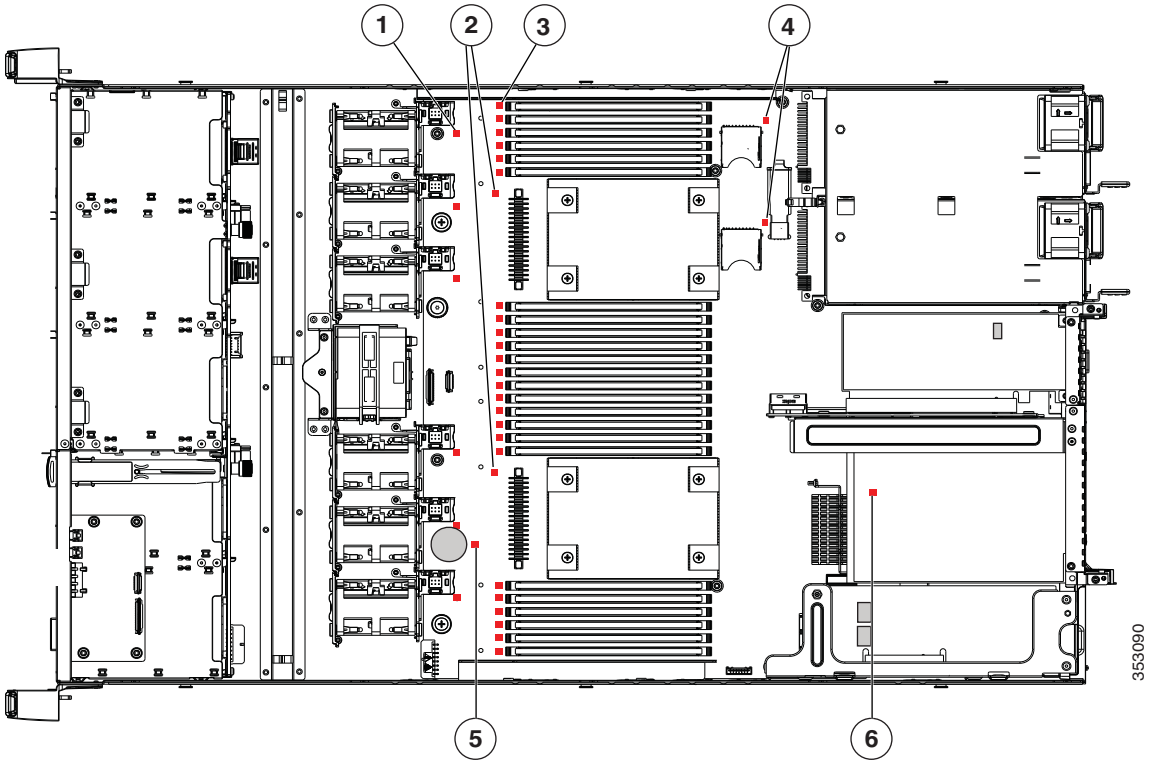

1	Fan module fault LEDs (one next to each fan connector on the motherboard)	**4**	SD card fault LEDs (one next to each bay)
2	CPU fault LEDs (one in front of each CPU)	**5**	RTC battery fault LED
3	DIMM fault LEDs (one in front of each DIMM socket on the motherboard)	**6**	mLOM card fault LED (on motherboard next to mLOM socket)

Table 3-3 Internal Diagnostic LEDs, Definition of States

LED Name	State
Internal diagnostic LEDs (all)	• Off—Component is functioning normally. • Amber—Component has failed.

Preparing for Cisco CSP 2100 Component Installation

This section describes how to prepare for component installation, and it includes the following topics:

Required Equipment

The following equipment is used to perform the procedures in this chapter:

- Number 2 Phillips-head screwdriver
- Electrostatic discharge (ESD) strap or other grounding equipment such as a grounded mat

Shutting Down and Powering Off the Cisco CSP 2100

The Cisco CSP 2100 can run in two power modes:

- Main power mode—Power is supplied to all Cisco CSP 2100 components and any operating system on your drives can run.
- Standby power mode—Power is supplied only to the service processor and the cooling fans and it is safe to power off the Cisco CSP 2100 from this mode.

You can invoke a graceful shutdown or a hard shutdown by using either of the following methods:

- Use the CIMC management interface.
- Use the **Power** button on the Cisco CSP 2100 front panel. To use the **Power** button, follow these steps:

Step 1 Check the color of the Power Status LED (see the "Front Panel LEDs" section on page 3-2).

- Green—Cisco CSP 2100 is in main power mode and must be shut down before it can be safely powered off. Go to Step 2.
- Amber—Cisco CSP 2100 is already in standby mode and can be safely powered off. Go to Step 3.

Step 2 Invoke either a graceful shutdown or a hard shutdown:

Caution To avoid data loss or damage to your operating system, you should always invoke a graceful shutdown of the operating system.

- Graceful shutdown—Press and release the **Power** button. The operating system performs a graceful shutdown and the Cisco CSP 2100 goes to standby mode, which is indicated by an amber Power Status LED.
- Emergency shutdown—Press and hold the **Power** button for 4 seconds to force the main power off and immediately enter standby mode.

Step 3 Disconnect the power cords from the power supplies in your Cisco CSP 2100 to completely power off the Cisco CSP 2100.

Removing and Replacing the Cisco CSP 2100 Top Cover

Step 1 Remove the top cover (see Figure 3-4).

a. If the cover latch is locked, use a screwdriver to turn the lock 90-degrees counterclockwise to unlock it. See Figure 3-4.

b. Lift on the end of the latch that has the green finger grip. The cover is pushed back to the open position as you lift the latch.

c. Lift the top cover straight up from the Cisco CSP 2100 and set it aside.

Step 2 Replace the top cover:

Note The latch must be in the fully open position when you set the cover back in place, which allows the opening in the latch to sit over a peg that is on the fan tray.

a. With the latch in the fully open position, place the cover on top of the Cisco CSP 2100 about one-half inch (1.27 cm) behind the lip of the front cover panel. The opening in the latch should fit over the peg that sticks up from the fan tray.

b. Press the cover latch down to the closed position. The cover is pushed forward to the closed position as you push down the latch.

c. If desired, lock the latch by using a screwdriver to turn the lock 90-degrees clockwise.

Figure 3-4 Removing the Top Cover

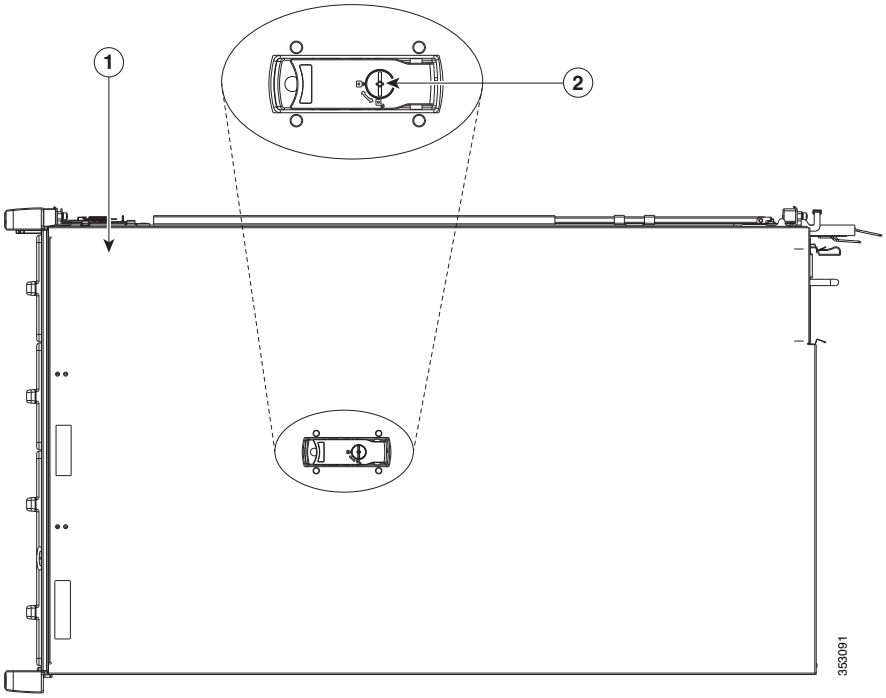

1	Top cover	**2**	Locking cover latch

Serial Number Location

The serial number for the Cisco CSP 2100 is printed on a label on the top of the Cisco CSP 2100, near the front.

Hot-Swap Replacement

Some components can be removed and replaced without powering off and removing AC power from the Cisco CSP 2100. For hot-swap replacement, you do not have to precondition or shut down the component in the software before you remove it for the following components:

- SAS/SATA drives
- Cooling fan modules
- Power supplies (when 1+1 redundant)

Installing or Replacing Cisco CSP 2100 Components

Warning **Blank faceplates and cover panels serve three important functions: they prevent exposure to hazardous voltages and currents inside the chassis; they contain electromagnetic interference (EMI) that might disrupt other equipment; and they direct the flow of cooling air through the chassis. Do not operate the system unless all cards, faceplates, front covers, and rear covers are in place.**
Statement 1029

Caution When handling Cisco CSP 2100 components, wear an ESD strap to avoid damage.

Tip You can press the unit identification button on the front panel or rear panel to turn on a flashing unit identification LED on the front and rear panels of the Cisco CSP 2100. This button allows you to locate the specific Cisco CSP 2100 that you are servicing when you go to the opposite side of the rack. You can also activate these LEDs remotely by using the CIMC interface. See the "Status LEDs and Buttons" section on page 3-2 for locations of these LEDs.

This section describes how to install and replace Cisco CSP 2100 components, and it includes the following topics:

Replaceable Component Locations

This section shows the locations of the field-replaceable components. The view in Figure 3-5 is from the top down with the top cover and air baffle removed.

Figure 3-5 Replaceable Component Locations

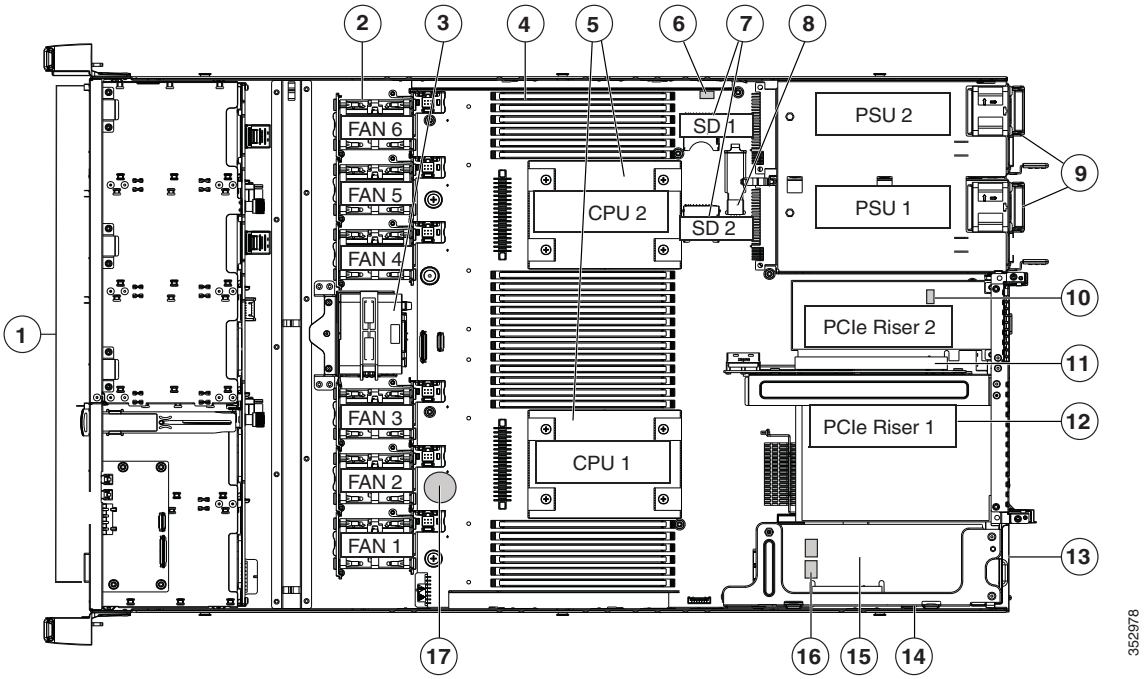

1	Drives (SAS/SATA drives are hot-swappable)	**10**	Trusted platform module (TPM) socket on motherboard (not visible in this view)
2	Cooling fan modules (six)	**11**	PCIe riser 2 (half-height PCIe slot 2)
3	Supercap Power Module (RAID backup) mounting bracket	**12**	PCIe riser 1 (full-height PCIe slot 1)
4	DIMM sockets on motherboard (24)	**13**	Modular LOM (mLOM) connector on chassis floor
5	CPUs and heatsinks (up to two)	**14**	Cisco modular RAID controller PCIe riser (dedicated riser with horizontal socket)
6	Embedded SATA RAID header for RAID 5 key	**15**	Cisco modular RAID controller card
7	SD card bays on motherboard (two)	**16**	Embedded SATA RAID mini-SAS connectors on motherboard (not visible in this view)
8	Internal USB 3.0 port on motherboard	**17**	RTC battery on motherboard
9	Power supplies (up to two, hot-swappable when redundant as 1+1)		

Replacing Hard Drives or Solid State Drives

This section includes the following information:

- Drive Population Guidelines, page 3-13
- Drive Replacement Procedure, page 3-14

Drive Population Guidelines

Cisco CSP 2100 supports the small form factor (SFF) drives and can hold up to eight 2.5-inch hard drives or solid state drives.

The drive-bay numbering is shown in Figure 3-6.

Figure 3-6 Drive Numbering, SFF Drives, Eight-Drive Version

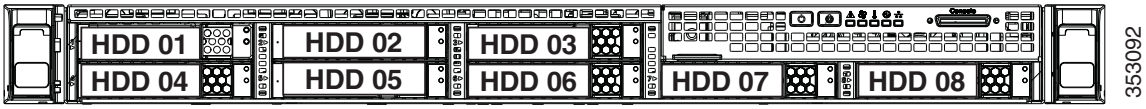

Observe these drive population guidelines for optimum performance:

- When populating drives, add drives to the lowest-numbered bays first.
- Keep an empty drive blanking tray in any unused bays to ensure proper airflow.
- You can mix hard drives and SSDs in the same Cisco CSP 2100. However, you cannot configure a logical volume (virtual drive) that contains a mix of hard drives and SSDs. That is, when you create a logical volume, it must contain all hard drives or all SSDs.

Drive Replacement Procedure

Tip You do not have to shut down or power off the Cisco CSP 2100 to replace SA/SATA hard drives or solid state drives because they are hot-swappable.

Step 1 Remove the drive that you are replacing or remove a blank drive tray from the bay:

- **a.** Press the release button on the face of the drive tray. See Figure 3-7.
- **b.** Grasp and open the ejector lever and then pull the drive tray out of the slot.
- **c.** If you are replacing an existing drive, remove the four drive-tray screws that secure the drive to the tray and then lift the drive out of the tray.

Step 2 Install a new drive:

- **a.** Place a new drive in the empty drive tray and install the four drive-tray screws.
- **b.** With the ejector lever on the drive tray open, insert the drive tray into the empty drive bay.
- **c.** Push the tray into the slot until it touches the backplane, and then close the ejector lever to lock the drive in place.

Figure 3-7 Replacing Hard Drives

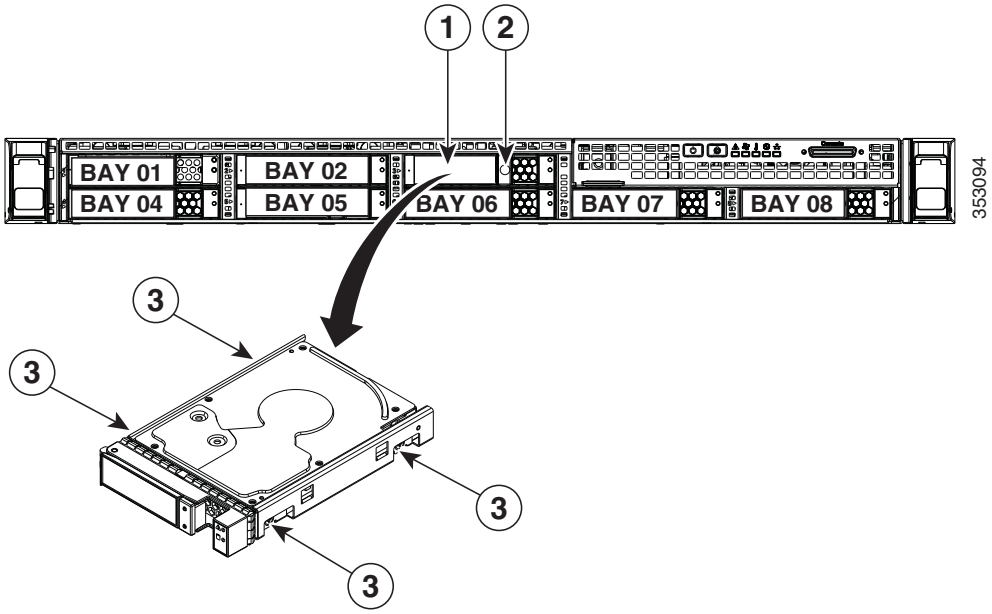

1	Ejector lever	**3**	Drive tray securing screws (4)
2	Release button		–

Replacing Fan Modules

The six fan modules in Cisco CSP 2100 are numbered as follows when you are facing the front of Cisco CSP 2100 (also see Figure 3-9).

Figure 3-8 Fan Module Numbering

FAN 6	FAN 5	FAN 4	FAN 3	FAN 2	FAN 1

Tip Each fan module has a fault LED next to the fan connector on the motherboard that lights amber if the fan module fails. Standby power is required to operate these LEDs.

Caution You do not have to shut down or power off the Cisco CSP 2100 to replace fan modules because they are hot- swappable. However, to maintain proper cooling, do not operate the Cisco CSP 2100 for more than one minute with any fan module removed.

Step 1 Remove a fan module that you are replacing (see Figure 3-9):

a. Slide the Cisco CSP 2100 out the front of the rack far enough so that you can remove the top cover. You might have to detach cables from the rear panel to provide clearance.

Caution If you cannot safely view and access the component, remove the Cisco CSP 2100 from the rack.

b. Remove the top cover as described in Removing and Replacing the Cisco CSP 2100 Top Cover, page 3-8.

c. Grasp the fan module at its front and on the green connector. Lift straight up to disengage its connector from the motherboard and free it from the two alignment pegs.

Step 2 Install a new fan module:

a. Set the new fan module in place, aligning its two openings with the two alignment pegs on the motherboard. See Figure 3-9.

b. Press down gently on the fan module connector to fully engage it with the connector on the motherboard.

c. Replace the top cover.

d. Replace the Cisco CSP 2100 in the rack.

Figure 3-9 Top View of Fan Module

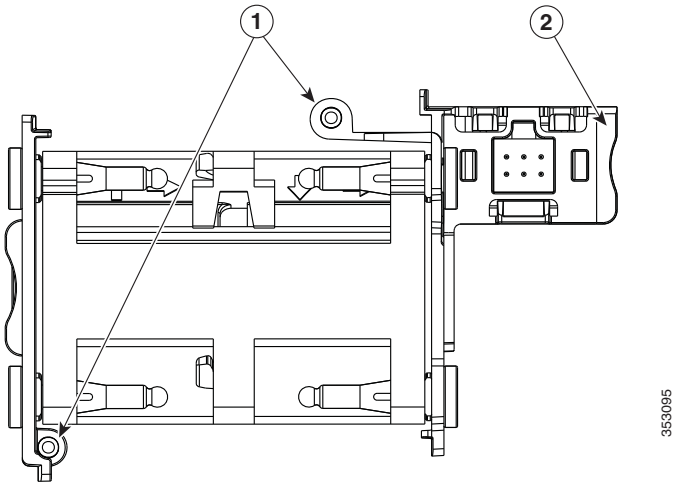

1	Openings in fan module for motherboard alignment pegs	**2**	Fan connector to motherboard

Replacing the Motherboard RTC Battery

Warning **There is danger of explosion if the battery is replaced incorrectly. Replace the battery only with the same or equivalent type recommended by the manufacturer. Dispose of used batteries according to the manufacturer's instructions.** [Statement 1015]

The real-time clock (RTC) battery retains system settings when the Cisco CSP 2100 is disconnected from power. The battery model is CR2032 or equivalent.

Step 1 Remove the RTC battery (see Figure 3-10):

a. Power off the Cisco CSP 2100 as described in Shutting Down and Powering Off the Cisco CSP 2100, page 3-7.

b. Slide the Cisco CSP 2100 out the front of the rack far enough so that you can remove the top cover. You might have to detach cables from the rear panel to provide clearance.

Caution If you cannot safely view and access the component, remove the Cisco CSP 2100 from the rack.

c. Remove the top cover as described in Removing and Replacing the Cisco CSP 2100 Top Cover, page 3-8.

d. Locate the RTC battery. See Figure 3-10.

e. Gently remove the battery from the holder on the motherboard.

Step 2 Install an RTC battery:

a. Insert the battery into its holder and press down until it clicks in place.

Note The positive side of the battery marked "3V+" should face upward.

b. Replace the top cover.

c. Replace the Cisco CSP 2100 in the rack, replace cables, and power on the Cisco CSP 2100 by pressing the **Power** button.

Figure 3-10 Motherboard RTC Battery Location

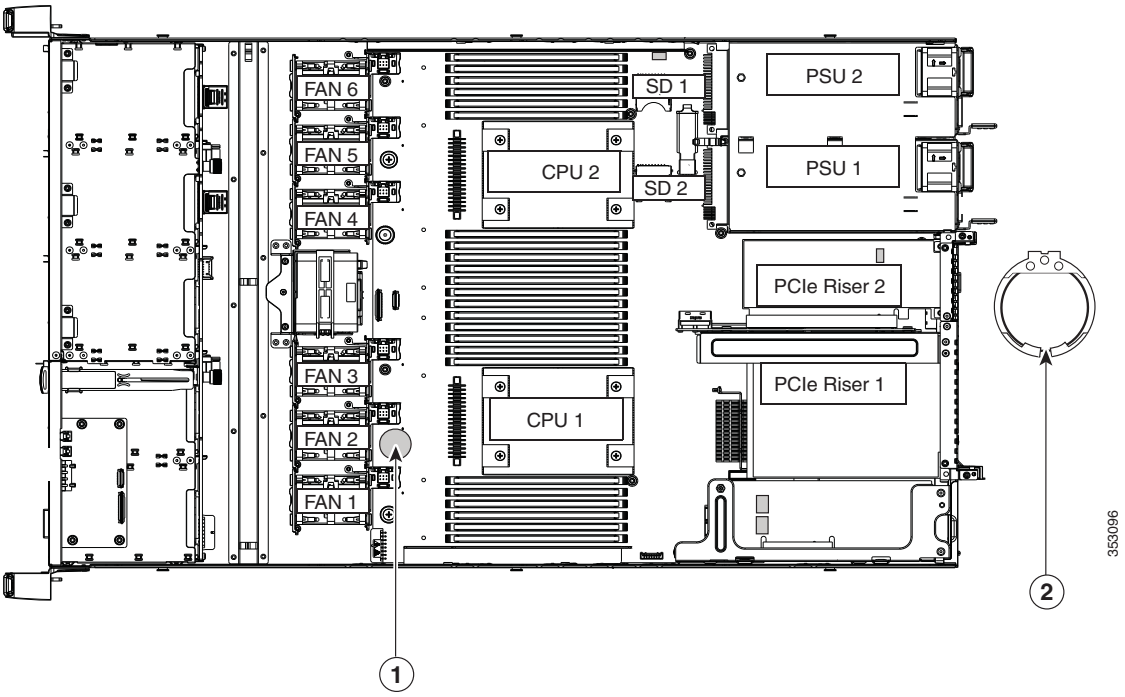

1	RTC battery holder on motherboard	**2**	Prying point on battery in holder

Replacing the Supercap Power Module (RAID Backup)

Cisco CSP 2100 supports installation of one supercap Power module (SCPM). The unit mounts to a bracket that is in the middle of the row of fan modules (see Figure 3-11).

The SCPM provides approximately three years of backup for the disk write-back cache DRAM in the case of a sudden power loss by offloading the cache to the NAND flash.

Warning **There is danger of explosion if the battery is replaced incorrectly. Replace the battery only with the same or equivalent type recommended by the manufacturer. Dispose of used batteries according to the manufacturer's instructions.**
Statement 1015

Step 1 Remove an existing SCPM (see Figure 3-11).

a. Power off the Cisco CSP 2100 as described in Shutting Down and Powering Off the Cisco CSP 2100, page 3-7.

b. Slide the Cisco CSP 2100 out the front of the rack far enough so that you can remove the top cover. You might have to detach cables from the rear panel to provide clearance.

Caution If you cannot safely view and access the component, remove the Cisco CSP 2100 from the rack.

c. Remove the top cover as described in Removing and Replacing the Cisco CSP 2100 Top Cover, page 3-8.

d. Disconnect the SCPM cable from the existing SCPM.

e. Release the securing clip on the bracket retainer bar and then open the retainer bar (see Figure 3-11).

f. Lift the SCPM free of the bracket and set it aside.

Step 2 Install a new SCPM:

a. Set the new SCPM into the mounting bracket.

b. Connect the cable from the Cisco modular RAID controller to the new SCPM.

c. Close the retainer bar over the SCPM. Push down until the securing clip clicks and holds down the retainer bar.

d. Replace the top cover.

e. Replace the Cisco CSP 2100 in the rack, replace cables, and then power on the Cisco CSP 2100 by pressing the **Power** button.

Figure 3-11 SCPM Bracket Location

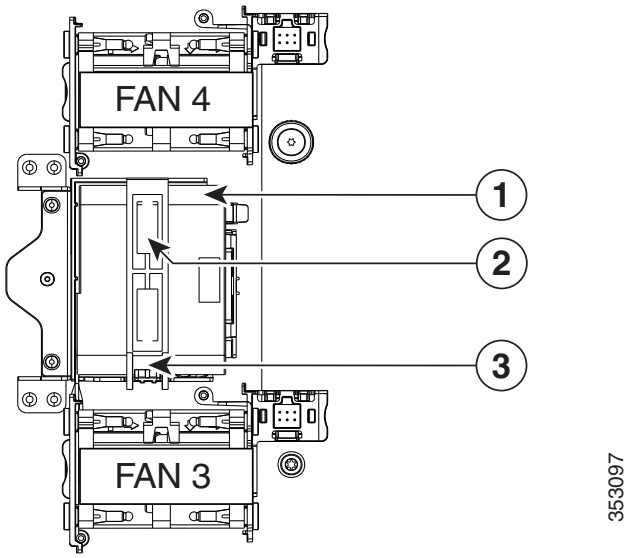

1	SCPM mounting bracket between fans 3 and 4	**3**	Retainer bar securing clip
2	Retainer bar		

Replacing DIMMs

This section includes the following topics:

Caution DIMMs and their sockets are fragile and must be handled with care to avoid damage during installation.

Caution Cisco does not support third-party DIMMs. Using non-Cisco DIMMs in the Cisco CSP 2100 might result in system problems or damage to the motherboard.

Note To ensure the best Cisco CSP 2100 performance, it is important that you are familiar with memory performance guidelines and population rules before you install or replace DIMMs.

Memory Performance Guidelines and Population Rules

This section describes the type of memory that the Cisco CSP 2100 requires and its effect on performance. The section includes the following topics:

DIMM Slot Numbering

Figure 3-12 shows the numbering of the DIMM slots.

Figure 3-12 DIMM Slots and CPUs

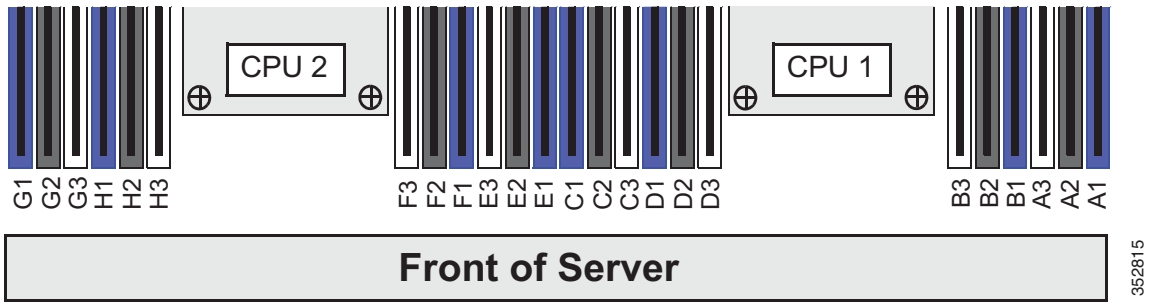

DIMM Population Rules

Observe the following guidelines when installing or replacing DIMMs:

Observe the following guidelines when installing or replacing DIMMs:

- Each CPU supports four memory channels.
  - CPU1 supports channels A, B, C, and D.
  - CPU2 supports channels E, F, G, and H.
- Each channel has three DIMM sockets (for example, channel A = slots A1, A2, and A3).
  - A channel can operate with one, two, or three DIMMs installed.
  - If a channel has only one DIMM, populate slot 1 first (the blue slot).
- When both CPUs are installed, populate the DIMM sockets of each CPU identically.
  - Fill blue #1 slots in the channels first: A1, E1, B1, F1, C1, G1, D1, H1
  - Fill black #2 slots in the channels second: A2, E2, B2, F2, C2, G2, D2, H2
  - Fill white #3 slots in the channels third: A3, E3, B3, F3, C3, G3, D3, H3
- Any DIMM installed in a DIMM socket for which the CPU is absent is not recognized. In a single-CPU configuration, populate the channels for CPU1 only (A, B, C, D).
- Memory mirroring reduces the amount of memory available by 50 percent because only one of the two populated channels provides data. When memory mirroring is enabled, DIMMs must be installed in sets of 4, 6, or 8 as described in Memory Mirroring and RAS, page 3-23.
- Observe the DIMM mixing rules shown in Table 3-4.

Table 3-4 DIMM Mixing Rules for Cisco CSP 2100

DIMM Parameter	DIMMs in the Same Channel	DIMMs in the Same Bank
DIMM Capacity: RDIMM = 8 or 16 GB LRDIMM = 32 or 64 GB	• You can mix different capacity DIMMs in the same channel (for example, A1, A2, A3).	• You can mix different capacity DIMMs in the same bank. However, for optimal performance DIMMs in the same bank (for example, A1, B1, C1, D1) should have the same capacity.
DIMM Speed: 2133 or 2400 MHz	You can mix speeds, but DIMMs will run at the speed of the slowest DIMMs/CPUs installed in the channel.	You can mix speeds, but DIMMs will run at the speed of the slowest DIMMs/CPUs installed in the bank.
DIMM Type: RDIMMs or LRDIMMs	You cannot mix DIMM types in a channel.	You cannot mix DIMM types in a bank.

Memory Mirroring and RAS

The Intel E5-2600 CPUs within the Cisco CSP 2100 support memory mirroring only when an even number of channels are populated with DIMMs. If one or three channels are populated with DIMMs, memory mirroring is automatically disabled. Furthermore, if memory mirroring is used, DRAM size is reduced by 50 percent for reasons of reliability.

The memory mirroring configuration for Cisco CSP 2100 is similar to that of Cisco UCS C-Series servers. You can refer to Cisco UCS C-Series Rack Server specification sheet for details on populating recommended memory mirroring configurations:

Cisco UCS C220 M4 High Density Rack Server (Small Form-Factor Disk Drive Model) Specification Sheet

Lockstep Channel Mode

When you enable lockstep channel mode, each memory access is a 128-bit data access that spans four channels.

Lockstep channel mode requires that all four memory channels on a CPU must be populated identically with regard to size and organization. DIMM socket populations within a channel (for example, A1, A2, A3) do not have to be identical but the same DIMM slot location across all four channels must be populated the same.

For example, DIMMs in sockets A1, B1, C1, and D1 must be identical. DIMMs in sockets A2, B2, C2, and D2 must be identical. However, the A1-B1-C1-D1 DIMMs do not have to be identical with the A2-B2-C2-D2 DIMMs.

DIMM Replacement Procedure

This section includes the following topics:

Identifying a Faulty DIMM

Each DIMM socket has a corresponding DIMM fault LED, directly in front of the DIMM socket. See Figure 3-3 for the locations of these LEDs. The LEDs light amber to indicate a faulty DIMM. To operate these LEDs from the supercap power source, remove AC power cords and then press the **unit identification** button. See also Internal Diagnostic LEDs, page 3-6.

Replacing DIMMs

Step 1 Remove the DIMM that you are replacing:

a. Power off the Cisco CSP 2100 as described in the Shutting Down and Powering Off the Cisco CSP 2100, page 3-7.

b. Slide the Cisco CSP 2100 out the front of the rack far enough so that you can remove the top cover. You might have to detach cables from the rear panel to provide clearance.

Caution If you cannot safely view and access the component, remove the Cisco CSP 2100 from the rack.

c. Remove the top cover as described in Removing and Replacing the Cisco CSP 2100 Top Cover, page 3-8.

d. Identify the faulty DIMM by observing the DIMM slot fault LEDs on the motherboard.

e. Open the ejector levers at both ends of the DIMM slot, and then lift the DIMM out of the slot.

Step 2 Install a new DIMM:

Note Before installing DIMMs, see the population guidelines: Memory Performance Guidelines and Population Rules, page 3-21.

f. Align the new DIMM with the empty slot on the motherboard. Use the alignment key in the DIMM slot to correctly orient the DIMM.

g. Push down evenly on the top corners of the DIMM until it is fully seated and the ejector levers on both ends lock into place.

h. Replace the top cover.

i. Replace the Cisco CSP 2100 in the rack, replace cables, and then power on the Cisco CSP 2100 by pressing the **Power** button.

Replacing CPUs and Heatsinks

This section contains the following topics:

CPU Configuration Rules

This Cisco CSP 2100 has two CPU sockets. Each CPU supports four DIMM channels (12 DIMM slots). See Figure 3-12.

- Cisco CSP 2100 can operate with one CPU or two identical CPUs installed.
- The minimum configuration is that Cisco CSP 2100 must have at least CPU1 installed. Install CPU1 first, and then CPU2.
- The following restrictions apply when using a single-CPU configuration:
  - The maximum number of DIMMs is 12 (only CPU1 channels A, B, C, and D).
  - PCIe riser 2/slot 2 is unavailable.

CPU Replacement Procedure

Caution CPUs and their motherboard sockets are fragile and must be handled with care to avoid damaging pins during installation. The CPUs must be installed with heatsinks and their thermal pads to ensure proper cooling. Failure to install a CPU correctly might result in damage to the Cisco CSP 2100.

Note Cisco CSP 2100 uses the new independent loading mechanism (ILM) CPU sockets, so no Pick-and-Place tools are required for CPU handling or installation. Always grasp the plastic frame on the CPU when handling.

Step 1 Power off the Cisco CSP 2100 as described in Shutting Down and Powering Off the Cisco CSP 2100, page 3-7.

Step 2 Slide the Cisco CSP 2100 out the front of the rack far enough so that you can remove the top cover. You might have to detach cables from the rear panel to provide clearance.

Caution If you cannot safely view and access the component, remove the Cisco CSP 2100 from the rack.

Step 3 Remove the top cover as described in Removing and Replacing the Cisco CSP 2100 Top Cover, page 3-8.

Step 4 Remove the plastic air baffle that sits over the CPUs.

Step 5 Remove the heatsink that you are replacing. Use a Number 2 Phillips-head screwdriver to loosen the four captive screws that secure the heatsink and then lift it off of the CPU.

Note Alternate loosening each screw evenly to avoid damaging the heatsink or CPU.

Step 6 Open the CPU retaining mechanism:

a. Unclip the first retaining latch labeled with the icon, and then unclip the second retaining latch labeled with the icon. See Figure 3-13.

b. Open the hinged CPU cover plate.

Figure 3-13 CPU Socket

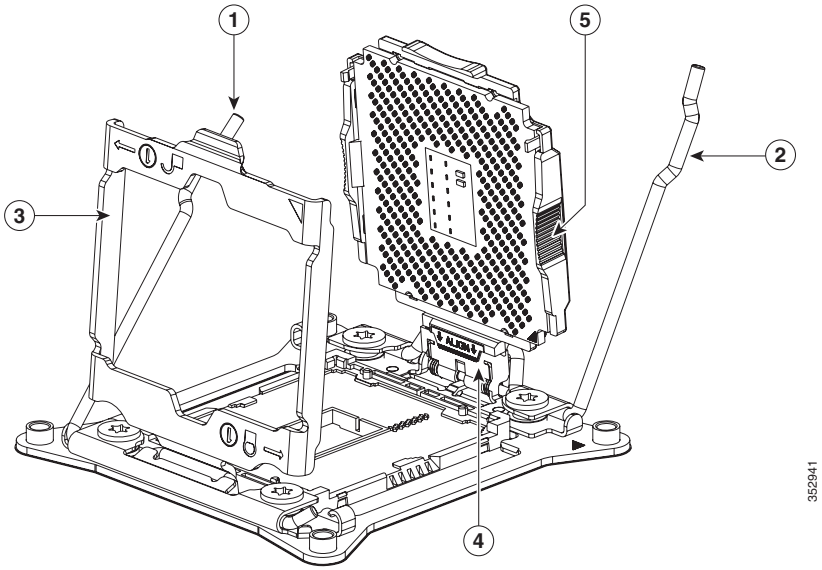

1	CPU retaining latch	**4**	Hinged CPU seat
2	CPU retaining latch	**5**	Finger grips on plastic CPU frame
3	Hinged CPU cover plate		

Step 7 Remove any existing CPU:

a. With the latches and hinged CPU cover plate open, swing up the CPU in its hinged seat to the open position, as shown in Figure 3-13.

b. Grasp the CPU by the finger grips on its plastic frame and lift it up and out of the hinged CPU seat.

c. Set the CPU aside on an anti-static surface.

Step 8 Install a new CPU:

a. Grasp the new CPU by the finger grips on its plastic frame and align the tab on the frame that is labeled “ALIGN” with the SLS mechanism, as shown in Figure 3-14.

b. Insert the tab on the CPU frame into the seat until it stops and is held firmly.

The line below the word “ALIGN” should be level with the edge of the seat, as shown in Figure 3-14.

c. Swing the hinged seat with the CPU down until the CPU frame clicks in place and holds flat in the socket.

d. Close the hinged CPU cover plate.

e. Clip down the CPU retaining latch with the icon, and then clip down the CPU retaining latch with the icon. See Figure 3-13.

Figure 3-14 CPU and Socket Alignment Features

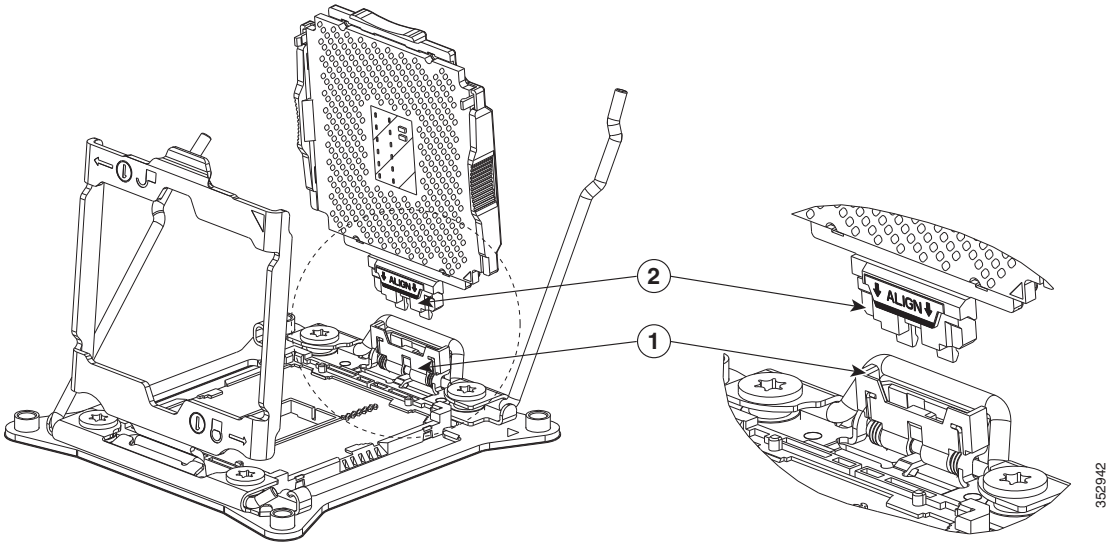

1	SLS mechanism on socket	**2**	Tab on CPU frame (labeled ALIGN)

Step 9 Install a heat sink:

Caution The heat sink must have new thermal grease on the heat sink-to-CPU surface to ensure proper cooling. If you are reusing a heat sink, you must remove the old thermal grease. If you are installing a new heat sink, skip to Step c.

a. Apply the cleaning solution, which is included with the heatsink cleaning kit (shipped with spare CPUs), to the old thermal grease and let it soak for a least 15 seconds.

b. Wipe all of the old thermal grease off the old heat sink using the soft cloth that is included with the heatsink cleaning kit. Be careful to not scratch the heat sink surface.

c. Apply thermal grease from the syringe that is included with the new CPU to the top of the CPU.

Apply about half the syringe contents to the top of the CPU in the pattern that is shown in Figure 3-15.

Note If you do not have a syringe of thermal grease, you can order a spare (**Cisco PID UCS-CPU-GREASE3=**). This syringe has a white cap.

Figure 3-15 Thermal Grease Application Pattern

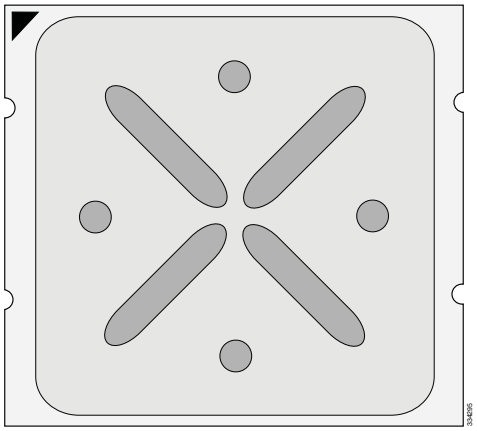

d. Align the four heatsink captive screws with the motherboard standoffs, and then use a Number 2 Phillips-head screwdriver to tighten the captive screws evenly.

Note Alternate tightening each screw evenly to avoid damaging the heatsink or CPU.

Step 10 Replace the air baffle.

Step 11 Replace the top cover.

Step 12 Replace the Cisco CSP 2100 in the rack, replace cables, and then power on the Cisco CSP 2100 by pressing the **Power** button.

Additional CPU-Related Parts to Order with RMA Replacement Motherboards

When a return material authorization (RMA) of the motherboard or CPU is done on a Cisco CSP 2100, additional parts might not be included with the CPU or motherboard spare bill of materials (BOM). The TAC engineer might need to add the additional parts to the RMA to help ensure a successful replacement.

- Scenario 1—You are reusing the existing heatsinks:
  - Heat sink cleaning kit (UCSX-HSCK=)
  - Thermal grease kit for Cisco CSP 2100 (UCS-CPU-GREASE3=)
- Scenario 2—You are replacing the existing heatsinks:
  - Heat sink (UCSC-HS-C220M4=)
  - Heat sink cleaning kit (UCSX-HSCK=)

A CPU heatsink cleaning kit is good for up to four CPU and heatsink cleanings. The cleaning kit contains two bottles of solution, one to clean the CPU and heatsink of old thermal interface material and the other to prepare the surface of the heatsink.

New heatsink spares come with the required thermal grease. It is important to clean the old thermal grease off of the CPU prior to installing the heatsinks. Therefore, when you are ordering new heatsinks, you must order the heatsink cleaning kit.

Replacing an Internal SD Card

The Cisco CSP 2100 has two internal SD card bays on the motherboard.

Dual SD cards are supported. RAID 1 support can be configured through the CIMC interface.

Step 1 Remove the SD card that you are replacing:

a. Slide the Cisco CSP 2100 out the front of the rack far enough so that you can remove the top cover. You might have to detach cables from the rear panel to provide clearance.

Caution If you cannot safely view and access the component, remove the Cisco CSP 2100 from the rack.

b. Remove the top cover as described in Removing and Replacing the Cisco CSP 2100 Top Cover, page 3-8.

c. Locate the SD card that you are replacing on the motherboard (see Figure 3-16).

d. Push on the top of the SD card, and then release it to allow it to spring up in the slot.

e. Remove the SD card from the slot.

Step 2 Install an SD card:

a. Insert the SD card into the slot with the label side facing up.

b. Press on the top of the card until it clicks in the slot and stays in place.

c. Replace the top cover.

d. Replace the Cisco CSP 2100 in the rack.

Figure 3-16 SD Card Bays and USB Port Locations on the Motherboard

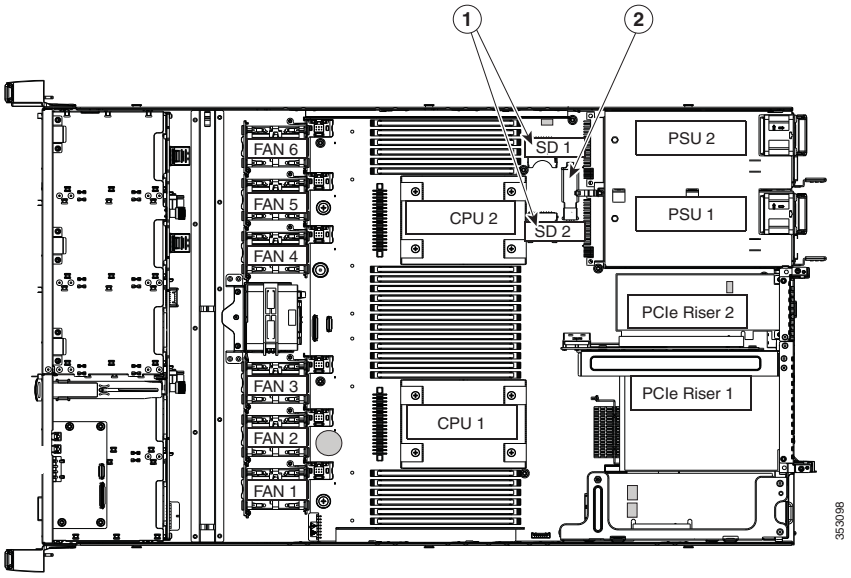

1	SD card bays SD1 and SD2	**2**	USB 3.0 port

Enabling or Disabling the Internal USB Port

Caution We do not recommend that you hot-swap the internal USB drive while the Cisco CSP 2100 is powered on.

The factory default is for all USB ports on the Cisco CSP 2100 to be enabled. However, the internal USB port can be enabled or disabled in the Cisco CSP 2100 BIOS. See Figure 3-16 for the location of the USB port on the motherboard.

Step 1 Enter the BIOS Setup Utility by pressing the **F2** key when prompted during bootup.

Step 2 Navigate to the **Advanced** tab.

Step 3 On the Advanced tab, select **USB Configuration**.

Step 4 On the USB Configuration page, select **USB Ports Configuration**.

Step 5 Scroll to **USB Port: Internal**, press **Enter**, and then choose either **Enabled** or **Disabled** from the dialog box.

Step 6 Press **F10** to save and exit the utility.

Replacing a Cisco Modular RAID Controller Riser (Internal Riser 3)

Cisco CSP 2100 has a dedicated internal riser (riser 3) that is only used for the Cisco modular RAID controller card. This riser plugs into a dedicated motherboard socket and provides a horizontal socket for the Cisco modular RAID controller card.

Step 1 Prepare the Cisco CSP 2100 for component installation:

a. Power off the Cisco CSP 2100 as described in Shutting Down and Powering Off the Cisco CSP 2100, page 3-7.

b. Slide the Cisco CSP 2100 out the front of the rack far enough so that you can remove the top cover. You might have to detach cables from the rear panel to provide clearance.

Caution If you cannot safely view and access the component, remove the Cisco CSP 2100 from the rack.

c. Remove the top cover as described in Removing and Replacing the Cisco CSP 2100 Top Cover, page 3-8.

Step 2 Remove the existing RAID controller riser (see Figure 3-17):

a. If the existing riser has a card in it, disconnect the SAS cable from the card.

b. Lift the riser straight up to disengage the riser from the motherboard socket. The riser bracket must also lift off of two pegs that hold it to the inner chassis wall.

c. Set the riser upside down.

d. Remove the card from the riser. Loosen the single thumbscrew that secures the card to the riser bracket and then pull the card straight out from its socket on the riser (see Figure 3-18).

Step 3 Install a new RAID controller riser:

- **a.** Set the new riser upside down.
- **b.** Install the RAID controller card into the new riser. Align the connector on the card with the socket on the riser and then carefully push it into the socket. Tighten the single thumbscrew that secures the card to the riser bracket (see Figure 3-18 on page 3-34).
- **c.** Align the connector on the riser with the socket on the motherboard. At the same time, align the two slots on the back side of the bracket with the two pegs on the inner chassis wall.
- **d.** Push down gently to engage the riser connector with the motherboard socket. The metal riser bracket must also engage the two pegs that secure it to the chassis wall.
- **e.** Reconnect the SAS cable to its connector on the RAID controller card.

Step 4 Replace the top cover.

Step 5 Replace the Cisco CSP 2100 in the rack, replace cables, and then power on the Cisco CSP 2100 by pressing the **Power** button.

Figure 3-17 Cisco Modular RAID Controller Riser (Internal Riser 3) Location

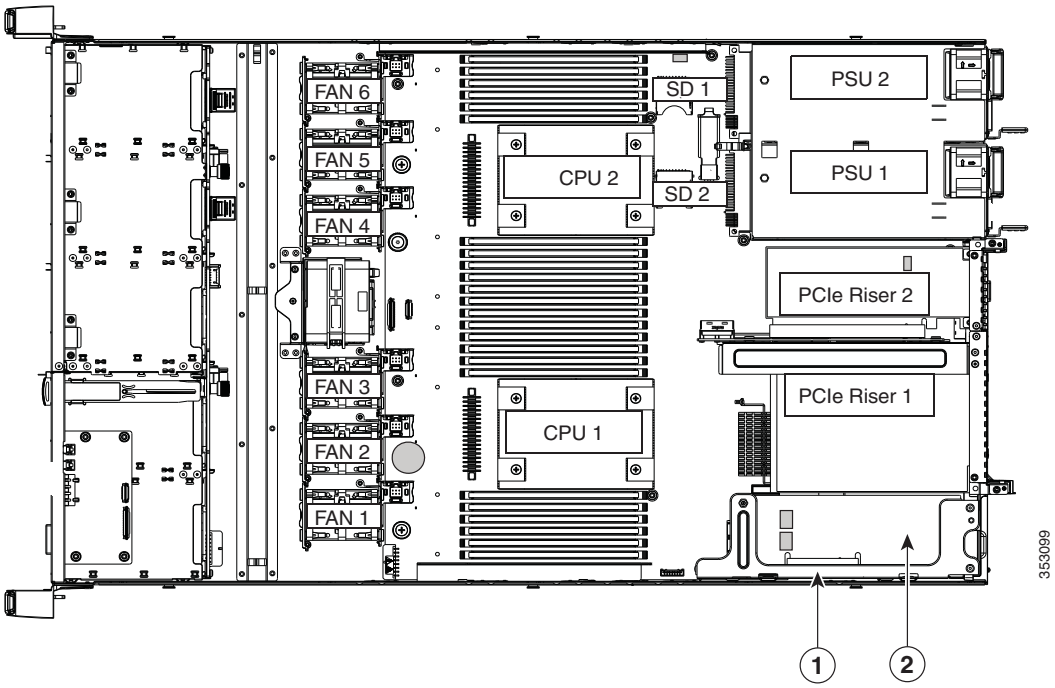

1	Cisco modular RAID controller riser assembly (top of bracket)	**2**	Cisco modular RAID controller card in riser

Replacing a Cisco Modular RAID Controller Card

Cisco CSP 2100 can use a Cisco modular RAID controller card that plugs into a horizontal socket on a dedicated internal riser (riser 3).

Note You cannot use a hardware RAID controller card and the embedded RAID controller at the same time.

Step 1 Prepare the Cisco CSP 2100 for component installation:

a. Power off the Cisco CSP 2100 as described in Shutting Down and Powering Off the Cisco CSP 2100, page 3-7.

b. Slide the Cisco CSP 2100 out the front of the rack far enough so that you can remove the top cover. You might have to detach cables from the rear panel to provide clearance.

Caution If you cannot safely view and access the component, remove the Cisco CSP 2100 from the rack.

c. Remove the top cover as described in Removing and Replacing the Cisco CSP 2100 Top Cover, page 3-8.

Step 2 Remove the RAID controller riser from the Cisco CSP 2100 (see Figure 3-17):

a. Disconnect the SAS cable from the existing RAID controller card.

b. Lift the riser straight up to disengage the riser from the motherboard socket. The riser bracket must also lift off of two pegs that hold it to the inner chassis wall.

c. Set the riser upside down.

Step 3 Remove the card from the riser:

a. Loosen the single thumbscrew that secures the card to the metal riser bracket (see Figure 3-18).

b. Pull the card straight out from its socket on the riser and the guide channel on the riser bracket.

Step 4 Install the RAID controller card into the new riser:

a. With the riser upside down, align the connector on the card with the socket on the riser. The end of the card should also go into the guide channel on the riser bracket (see Figure 3-18).

b. Carefully push on both corners of the card until it is seated in the socket.

c. Tighten the single thumbscrew that secures the card to the riser bracket.

Step 5 Return the riser to the Cisco CSP 2100:

a. Align the connector on the riser with the socket on the motherboard. At the same time, align the two slots on the back side of the bracket with the two pegs on the inner chassis wall.

b. Push down gently to engage the riser connector with the motherboard socket. The metal riser bracket must also engage the two pegs that secure it to the chassis wall.

Step 6 Reconnect the SAS cable to its connector on the RAID controller card.

Step 7 Replace the top cover.

Step 8 Replace the Cisco CSP 2100 in the rack, replace cables, and then power on the Cisco CSP 2100 by pressing the **Power** button.

Figure 3-18 Cisco Modular RAID Controller Card in Riser

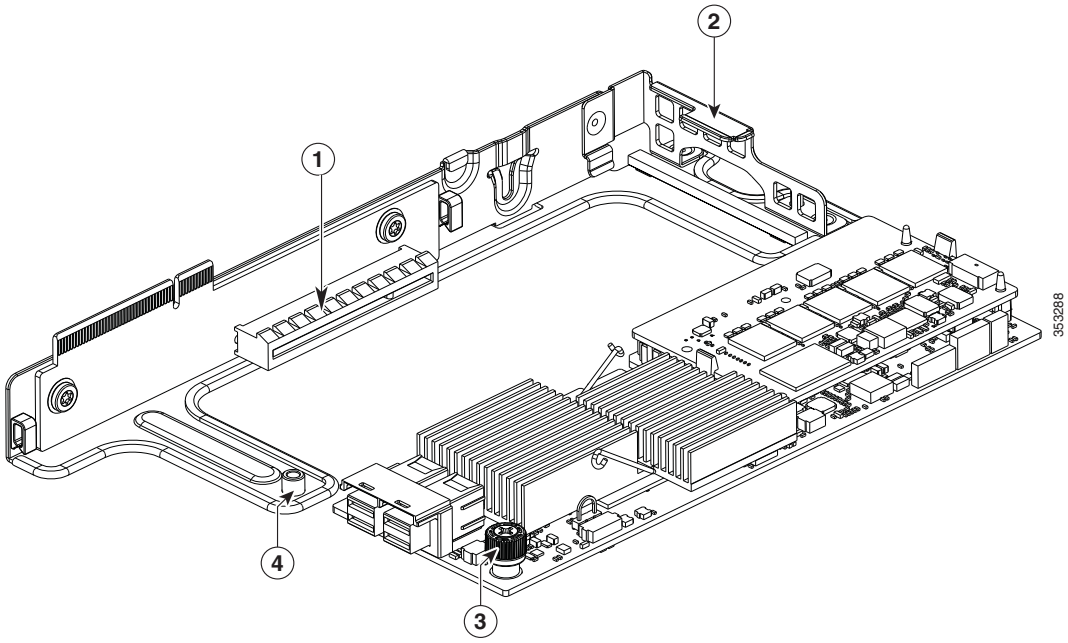

1	Card socket on upside down riser	**3**	Thumbscrew on card
2	Guide channel on riser bracket		

Replacing a PCIe Riser Assembly

Cisco CSP 2100 contains two PCIe risers that are attached to a single riser assembly. Riser 1 provides PCIe slot 1 and riser 2 provides PCIe slot 2, as shown in Figure 3-19. See Table 3-5 for a description of the PCIe slots on each riser.

Figure 3-19 Rear Panel, Showing PCIe Slots

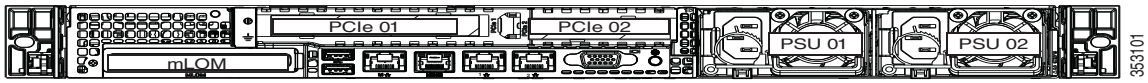

To install or replace a PCIe riser, follow these steps:

Step 1 Remove the PCIe riser assembly that you are replacing:

a. Power off the Cisco CSP 2100 as described in Shutting Down and Powering Off the Cisco CSP 2100, page 3-7.

b. Slide the Cisco CSP 2100 out the front of the rack far enough so that you can remove the top cover. You might have to detach cables from the rear panel to provide clearance.

Caution If you cannot safely view and access the component, remove the Cisco CSP 2100 from the rack.

c. Remove the top cover as described in Removing and Replacing the Cisco CSP 2100 Top Cover, page 3-8.

d. Use two hands to grasp the metal bracket of the riser assembly and lift straight up to disengage its connectors from the two sockets on the motherboard.

e. If the riser has any cards installed, remove them from the riser.

Step 2 Install a new PCIe riser assembly:

a. If you removed any cards from the old riser assembly, install the cards to the new riser assembly (see Replacing a PCIe Card, page 3-37).

b. Position the riser assembly over its two sockets on the motherboard and over the chassis alignment channels (see Figure 3-20):

c. Carefully push down on both ends of the riser assembly to fully engage its connectors with the two sockets on the motherboard.

Step 3 Replace the top cover.

Step 4 Replace the Cisco CSP 2100 in the rack, replace cables, and then power on the Cisco CSP 2100 by pressing the **Power** button.

Figure 3-20 PCIe Riser Assembly Location and Alignment Channels

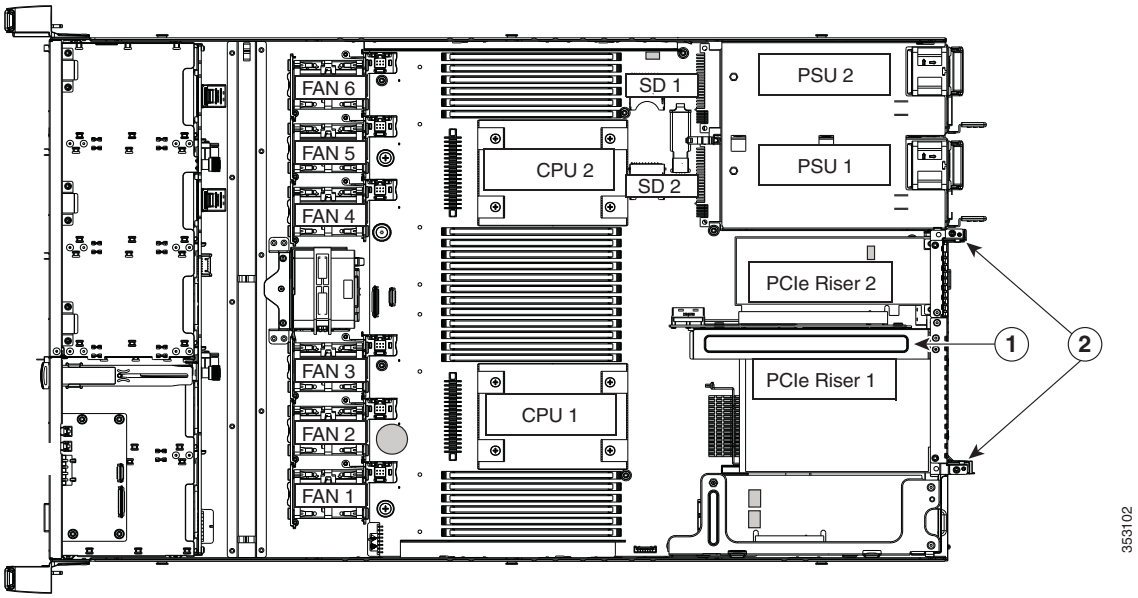

1	PCIe riser assembly bracket	**3**	Chassis alignment channels

Replacing a PCIe Card

Caution Cisco supports all PCIe cards qualified and sold by Cisco. PCIe cards not qualified or sold by Cisco are the responsibility of the customer. Although Cisco will always stand behind and support the Cisco CSP 2100, customers using standard, off-the-shelf, third-party cards must go to the third-party card vendor for support if any issue with that particular third-party card occurs.

This section includes the following topics:

PCIe Slots

Cisco CSP 2100 contains two toolless PCIe risers for horizontal installation of PCIe cards. See Figure 3-21 and Table 3-5 for a description of the PCIe slots on these risers.

Both slots support the network communications services interface (NCSI) protocol and standby power.

Figure 3-21 Rear Panel, Showing PCIe Slots

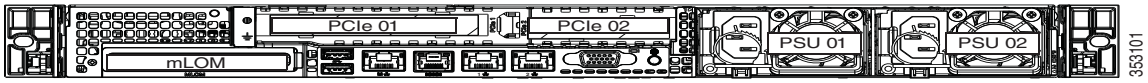

Table 3-5 PCIe Expansion Slots

Slot Number	Electrical Lane Width	Connector Length	Card Length[1]	Card Height [2]	NCSI Support
1 (on riser 1)	Gen-3 x16	x24 connector	3/4 length	Full-height	Yes
2 (on riser version 2A)[3]	Gen-3 x16	x24 connector	1/2 length	1/2 height	Yes

1. This is the supported length because of internal clearance.
2. This is the size of the rear panel opening.
3. Slot 2 is not available in single-CPU configurations.

Replacing a PCIe Card

To install or replace a PCIe card, follow these steps:

Step 1 Remove an existing PCIe card (or a blank filler panel) from the PCIe riser:

a. Shut down and power off the Cisco CSP 2100 as described in Shutting Down and Powering Off the Cisco CSP 2100, page 3-7.

b. Slide the Cisco CSP 2100 out the front of the rack far enough so that you can remove the top cover. You might have to detach cables from the rear panel to provide clearance.

Caution If you cannot safely view and access the component, remove the Cisco CSP 2100 from the rack.

c. Remove the top cover as described in Removing and Replacing the Cisco CSP 2100 Top Cover, page 3-8.

d. Remove any cables from the ports of the PCIe card that you are replacing.

e. Use two hands to grasp the metal bracket of the riser assembly and lift straight up to disengage its connectors from the two sockets on the motherboard.

f. Open the hinged plastic retainer that secures the rear-panel tab of the card (see Figure 3-22).

g. Pull evenly on both ends of the PCIe card to remove it from the socket on the PCIe riser.

   If the riser has no card, remove the blanking panel from the rear opening of the riser.

Step 2 Install a new PCIe card:

a. Open the hinged plastic retainer

b. With the hinged tab retainer open, align the new PCIe card with the empty socket on the PCIe riser.

c. Push down evenly on both ends of the card until it is fully seated in the socket.

d. Ensure that the card's rear panel tab sits flat against the riser rear-panel opening and then close the hinged tab retainer over the card's rear-panel tab (see Figure 3-22).

e. Position the PCIe riser over its two sockets on the motherboard and over the chassis alignment channels (see Figure 3-20).

f. Carefully push down on both ends of the PCIe riser to fully engage its connector with the sockets on the motherboard.

g. Replace the top cover.

h. Replace the Cisco CSP 2100 in the rack, replace cables, and then power on the Cisco CSP 2100 by pressing the **Power** button.

Figure 3-22 PCIe Riser Assembly

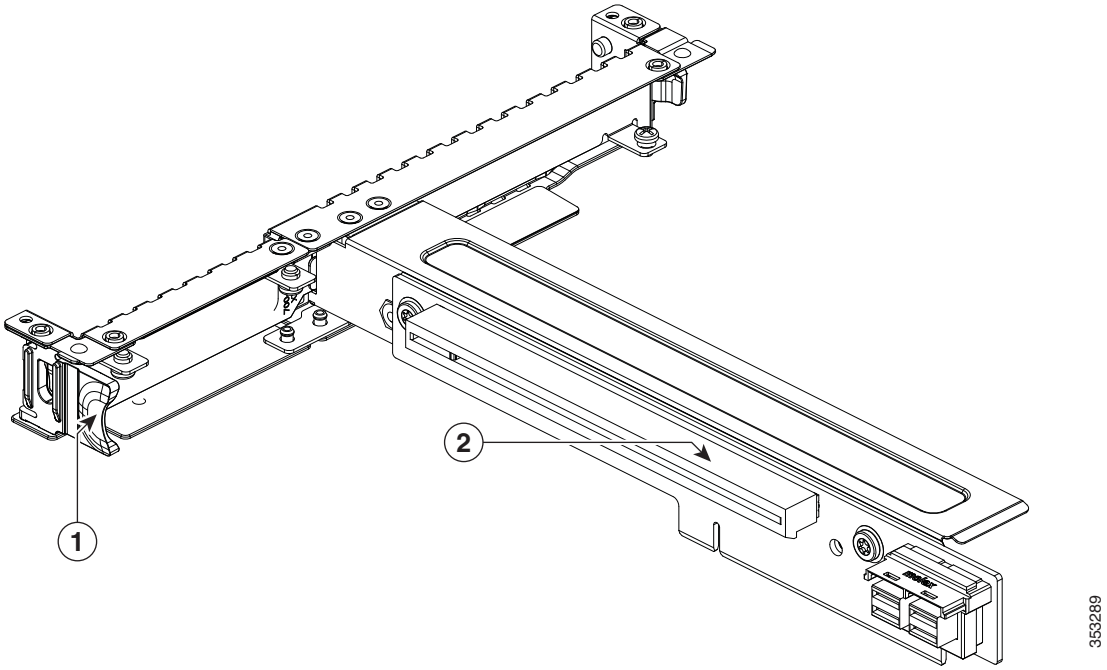

1	Hinged rear-panel tab retainer	**3**	Card socket on riser (riser 2 socket shown)

Installing Multiple PCIe Cards and Resolving Limited Resources

When a large number of PCIe add-on cards are installed in the Cisco CSP 2100, the system might run out of the following resources required for PCIe devices:

- Option ROM memory space
- 16-bit I/O space

The topics in this section provide guidelines for resolving the issues related to these limited resources:

- Resolving Insufficient Memory Space to Execute Option ROMs, page 3-39
- Resolving Insufficient 16-Bit I/O Space, page 3-40

Resolving Insufficient Memory Space to Execute Option ROMs

The system has very limited memory to execute PCIe legacy option ROMs, so when a large number of PCIe add-on cards are installed in the Cisco CSP 2100, the system BIOS might not able to execute all of the option ROMs. The system BIOS loads and executes the option ROMs in the order that the PCIe cards are enumerated (slot 1, slot 2, slot 3, and so on).

If the system BIOS does not have sufficient memory space to load any PCIe option ROM, it skips loading that option ROM, reports a system event log (SEL) event to the CIMC controller and reports the following error in the Error Manager page of the BIOS Setup utility:

```
ERROR CODE  SEVERITY    INSTANCE    DESCRIPTION
146         Major       N/A         PCI out of resources error.
                                    Major severity requires user
                                    intervention but does not
                                    prevent system boot.
```

To resolve this issue, disable the Option ROMs that are not needed for system booting. The BIOS Setup Utility provides the setup options to enable or disable the Option ROMs at the PCIe slot level for the PCIe expansion slots and at the port level for the onboard NICs. These options can be found in the BIOS Setup Utility **Advanced** > **PCI Configuration** page.

- **Guidelines for RAID controller booting**

  If the Cisco CSP 2100 is configured to boot primarily from RAID storage, make sure that the option ROMs for the slots where your RAID controllers installed are enabled in the BIOS, depending on your RAID controller configuration.

  If the RAID controller does not appear in the system boot order even with the option ROMs for those slots enabled, the RAID controller option ROM might not have sufficient memory space to execute. In that case, disable other option ROMs that are not needed for the system configuration to free up some memory space for the RAID controller option ROM.

- **Guidelines for onboard NIC PXE booting**

  If the system is configured to primarily perform PXE boot from onboard NICs, make sure that the option ROMs for the onboard NICs to be booted from are enabled in the BIOS Setup Utility. Disable other option ROMs that are not needed to create sufficient memory space for the onboard NICs.

Resolving Insufficient 16-Bit I/O Space

The system has only 64 KB of legacy 16-bit I/O resources available. This 64 KB of I/O space is divided between the CPUs in the system because the PCIe controller is integrated into the CPUs. This Cisco CSP 2100 BIOS has the capability to dynamically detect the 16-bit I/O resource requirement for each CPU and then balance the 16-bit I/O resource allocation between the CPUs during the PCI bus enumeration phase of the BIOS POST.

When a large number of PCIe cards are installed in the system, the system BIOS might not have sufficient I/O space for some PCIe devices. If the system BIOS is not able to allocate the required I/O resources for any PCIe devices, the following symptoms have been observed:

- The system might get stuck in an infinite reset loop.
- The BIOS might appear to hang while initializing PCIe devices.
- The PCIe option ROMs might take excessive time to complete, which appears to lock up the system.
- PCIe boot devices might not be accessible from the BIOS.
- PCIe option ROMs might report initialization errors. These errors are seen before the BIOS passes control to the operating system.
- The keyboard might not work.

The work around to this problem is to rebalance the 16-bit I/O load by physically removing any unused PCIe cards.

Replacing an mLOM Card

Cisco CSP 2100 can use a modular LOM (mLOM) card to provide additional rear-panel connectivity. The mLOM card socket remains powered when the Cisco CSP 2100 is in 12 V standby power mode and it supports the network communications services interface (NCSI) protocol.

Step 1 Remove any existing mLOM card (or a blanking panel):

a. Power off the Cisco CSP 2100 as described in Shutting Down and Powering Off the Cisco CSP 2100, page 3-7.

b. Slide the Cisco CSP 2100 out the front of the rack far enough so that you can remove the top cover. You might have to detach cables from the rear panel to provide clearance.

Caution If you cannot safely view and access the component, remove the Cisco CSP 2100 from the rack.

c. Remove the top cover as described in Removing and Replacing the Cisco CSP 2100 Top Cover, page 3-8.

Step 2 See the location of the mLOM socket in Figure 3-23. You might have to remove PCIe riser 1 and the Cisco modular RAID controller riser to provide clearance.

- If there is no card in PCIe riser 1 or the RAID card riser, you can access the mLOM socket. Continue with Step 3.
- If there is a card in PCIe riser 1 or the RAID card riser, remove those risers to provide clearance. See Replacing a PCIe Riser Assembly, page 3-35 and Replacing a Cisco Modular RAID Controller Card, page 3-33 for instructions.

Step 3 Loosen the single thumbscrew that secures the mLOM card to the chassis floor and then slide the mLOM card horizontally to disengage its connector from the motherboard socket.

Step 4 Install a new mLOM card:

a. Set the mLOM card on the chassis floor so that its connector is aligned with the motherboard socket and its thumbscrew is aligned with the standoff on the chassis floor.

b. Push the card's connector into the motherboard socket horizontally.

c. Tighten the thumbscrew to secure the card to the chassis floor.

Step 5 If you removed PCIe riser 1 or the RAID card riser, return them to the Cisco CSP 2100. See Replacing a PCIe Riser Assembly, page 3-35 or Replacing a Cisco Modular RAID Controller Card, page 3-33 for instructions.

Step 6 Replace the top cover.

Step 7 Replace the Cisco CSP 2100 in the rack, replace cables, and then power on the Cisco CSP 2100 by pressing the **Power** button.

Figure 3-23 mLOM Card Socket Location

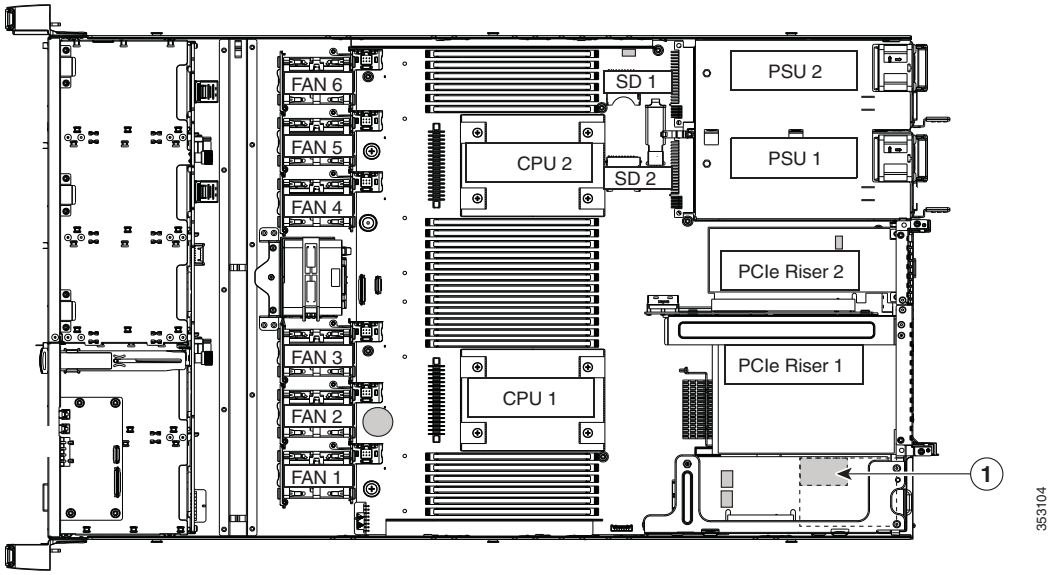

1	mLOM card socket location on motherboard (under a PCIe riser 1 card and the RAID controller card)		

Replacing Power Supplies

Cisco CSP 2100 can have one or two power supplies. The two power supply setup functions as a redundant configuration. Cisco CSP 2100 also supports cold redundancy. Depending on the power being drawn by the Cisco CSP 2100, one power supply might actively provide all power to the system while the remaining power supply is put into a standby state. For example, if you have two supplies connected to AC power, but the power consumption can be satisfied by power supply 1, then power supply 2 is put into a standby state.

- See Power Specifications, page 4-3 for more information about the power supplies.
- See Rear Panel LEDs and Buttons, page 3-4 for information about the power supply LEDs.

Note If you have ordered a Cisco CSP 2100 with power supply redundancy (two power supplies), you do not have to power off the Cisco CSP 2100 to replace power supplies because they are redundant as 1+1.

Note Do not mix power supply types or wattages in the Cisco CSP 2100.

Step 1 Remove the power supply that you are replacing or a blank panel from an empty bay (see Figure 3-24):

a. Perform one of the following actions:
   - If your Cisco CSP 2100 has only one power supply, shut down and power off the Cisco CSP 2100 as described in the "Shutting Down and Powering Off the Cisco CSP 2100" section on page 3-7.
   - If your Cisco CSP 2100 has two power supplies, you do not have to shut down the Cisco CSP 2100.

b. Remove the power cord from the power supply that you are replacing.

c. Grasp the power supply handle while pinching the release lever toward the handle.

d. Pull the power supply out of the bay.

Step 2 Install a new power supply:

a. Grasp the power supply handle and insert the new power supply into the empty bay.

b. Push the power supply into the bay until the release lever locks.

c. Connect the power cord to the new power supply.

d. If you shut down the Cisco CSP 2100, press the **Power** button to return the Cisco CSP 2100 to main power mode.

Figure 3-24 Removing and Replacing Power Supplies

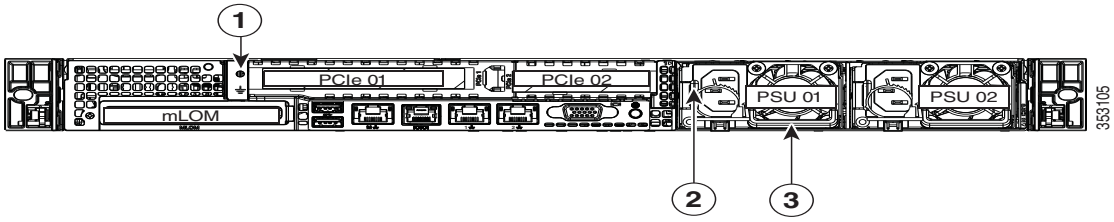

1	Power supply release lever	**2**	Power supply handle

Service DIP Switches

This section includes the following topics:

DIP Switch Location on the Motherboard

See Figure 3-25. The position of the block of DIP switches (SW6) is shown in red. In the magnified view, all switches are shown in the default position.

- BIOS recovery—Switch 1.
- Clear password—Switch 2.
- Not used—Switch 3.
- Clear CMOS—Switch 4.

Figure 3-25 Service DIP Switches (SW6)

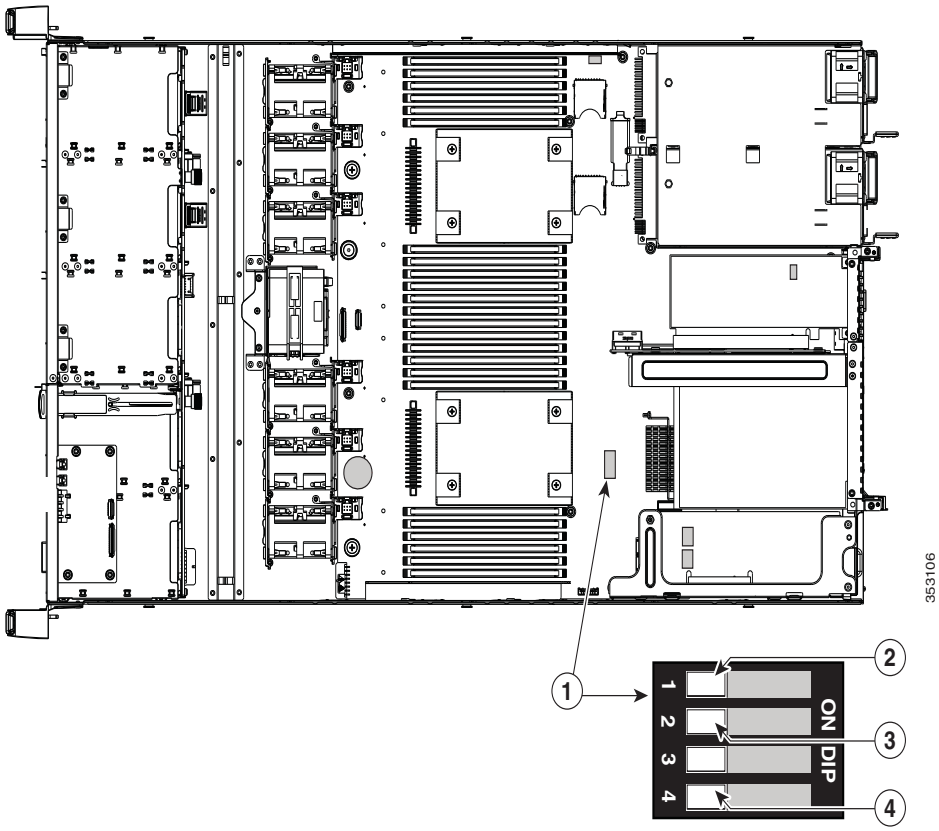

1	DIP switch block SW6	**3**	Clear password switch 2
2	BIOS recovery switch 1	**4**	Clear CMOS switch 4

Using the BIOS Recovery DIP Switch

Depending on which stage the BIOS becomes corrupted, you might see different behavior.

- If the BIOS BootBlock is corrupted, you might see the system get stuck on the following message:

```
Initializing and configuring memory/hardware
```

- If it is a non-BootBlock corruption, the following message is displayed:

```
****BIOS FLASH IMAGE CORRUPTED****
Flash a valid BIOS capsule file using Cisco IMC WebGUI or CLI interface.
IF Cisco IMC INTERFACE IS NOT AVAILABLE, FOLLOW THE STEPS MENTIONED BELOW.
1. Connect the USB stick with recovery.cap file in root folder.
2. Reset the host.
IF THESE STEPS DO NOT RECOVER THE BIOS
1. Power off the system.
2. Mount recovery jumper.
3. Connect the USB stick with recovery.cap file in root folder.
4. Power on the system.
Wait for a few seconds if already plugged in the USB stick.
REFER TO SYSTEM MANUAL FOR ANY ISSUES.
```

Note As indicated by the message shown above, there are two procedures for recovering the BIOS. Try procedure 1 first. If that procedure does not recover the BIOS, use procedure 2.

Procedure 1: Reboot with recovery.cap File

Step 1 Download the BIOS update package and extract it to a temporary location.

Step 2 Copy the contents of the extracted recovery folder to the root directory of a USB thumb drive. The recovery folder contains the recovery.cap file that is required in this procedure.

Note The recovery.cap file must be in the root directory of the USB thumb drive. Do not rename this file. The USB thumb drive must be formatted with either FAT16 or FAT32 file systems.

Step 3 Insert the USB thumb drive into a USB port on the Cisco CSP 2100.

Step 4 Reboot the Cisco CSP 2100.

Step 5 Return the Cisco CSP 2100 to main power mode by pressing the **Power** button on the front panel.

The Cisco CSP 2100 boots with the updated BIOS boot block. When the BIOS detects a valid recovery.cap file on the USB thumb drive, it displays this message:

```
Found a valid recovery file...Transferring to Cisco IMC
System would flash the BIOS image now...
System would restart with recovered image after a few seconds...
```

Step 6 Wait for the Cisco CSP 2100 to complete the BIOS update, and then remove the USB thumb drive from the Cisco CSP 2100.

Note During the BIOS update, CIMC shuts down the Cisco CSP 2100 and the screen goes blank for about 10 minutes. Do not unplug the power cords during this update. CIMC powers on the Cisco CSP 2100 after the update is complete.

Procedure 2: Use BIOS Recovery DIP switch and recovery.cap File

See Figure 3-25 for the location of the SW8 block of DIP switches.

Step 1 Download the BIOS update package and extract it to a temporary location.

Step 2 Copy the contents of the extracted recovery folder to the root directory of a USB thumb drive. The recovery folder contains the recovery.cap file that is required in this procedure.

Note The recovery.cap file must be in the root directory of the USB thumb drive. Do not rename this file. The USB thumb drive must be formatted with either FAT16 or FAT32 file systems.

Step 3 Power off the Cisco CSP 2100 as described in Shutting Down and Powering Off the Cisco CSP 2100, page 3-7.

Step 4 Disconnect all power cords from the power supplies.

Step 5 Slide the Cisco CSP 2100 out the front of the rack far enough so that you can remove the top cover. You might have to detach cables from the rear panel to provide clearance.

Caution If you cannot safely view and access the component, remove the Cisco CSP 2100 from the rack.

Step 6 Remove the top cover as described in Removing and Replacing the Cisco CSP 2100 Top Cover, page 3-8.

Step 7 Slide the BIOS recovery DIP switch from position 1 to the closed position (see Figure 3-25).

Step 8 Reconnect AC power cords to the Cisco CSP 2100. The Cisco CSP 2100 powers up to standby power mode.

Step 9 Insert the USB thumb drive that you prepared in Step 2 into a USB port on the Cisco CSP 2100.

Step 10 Return the Cisco CSP 2100 to main power mode by pressing the **Power** button on the front panel.

The Cisco CSP 2100 boots with the updated BIOS boot block. When the BIOS detects a valid recovery.cap file on the USB thumb drive, it displays this message:

```
Found a valid recovery file...Transferring to Cisco IMC
System would flash the BIOS image now...
System would restart with recovered image after a few seconds...
```

Step 11 Wait for the Cisco CSP 2100 to complete the BIOS update, and then remove the USB thumb drive from the Cisco CSP 2100.

Note During the BIOS update, CIMC shuts down the Cisco CSP 2100 and the screen goes blank for about 10 minutes. Do not unplug the power cords during this update. CIMC powers on the Cisco CSP 2100 after the update is complete.

Step 12 After the Cisco CSP 2100 has fully booted, power off the Cisco CSP 2100 again and disconnect all power cords.

Step 13 Slide the BIOS recovery DIP switch from the closed position back to the default position 1 (see Figure 3-25).

Note If you do not move the jumper, after recovery completion you see the prompt, "Please remove the recovery jumper."

Step 14 Replace the top cover, replace the Cisco CSP 2100 in the rack, replace power cords and any other cables, and then power on the Cisco CSP 2100 by pressing the **Power** button.

Using the Clear Password DIP Switch

See Figure 3-25 for the location of this DIP switch. You can use this switch to clear the administrator password.

Step 1 Power off the Cisco CSP 2100 as described in Shutting Down and Powering Off the Cisco CSP 2100, page 3-7.

Step 2 Disconnect all power cords from the power supplies.

Step 3 Slide the Cisco CSP 2100 out the front of the rack far enough so that you can remove the top cover. You might have to detach cables from the rear panel to provide clearance.

Caution If you cannot safely view and access the component, remove the Cisco CSP 2100 from the rack.

Step 4 Remove the top cover as described in Removing and Replacing the Cisco CSP 2100 Top Cover, page 3-8.

Step 5 Slide the clear password DIP switch from position 2 to the closed position (see Figure 3-25).

Step 6 Reinstall the top cover and reconnect AC power cords to the Cisco CSP 2100. The Cisco CSP 2100 powers up to standby power mode, indicated when the Power LED on the front panel is amber.

Step 7 Return the Cisco CSP 2100 to main power mode by pressing the **Power** button on the front panel. The Cisco CSP 2100 is in main power mode when the Power LED is green.

Note You must allow the entire Cisco CSP 2100, not just the service processor, to reboot to main power mode to complete the reset. The state of the jumper cannot be determined without the host CPU running.

Step 8 Press the **Power** button to shut down the Cisco CSP 2100 to standby power mode, and then remove AC power cords from the Cisco CSP 2100 to remove all power.

Step 9 Remove the top cover from the Cisco CSP 2100.

Step 10 Slide the clear CMOS DIP switch from the closed position back to default position 2 (see Figure 3-25).

Note If you do not move the jumper, the CMOS settings are reset to the default every time that you power-cycle the Cisco CSP 2100.

Step 11 Replace the top cover, replace the Cisco CSP 2100 in the rack, replace power cords and any other cables, and then power on the Cisco CSP 2100 by pressing the **Power** button.

Using the Clear CMOS DIP Switch

See Figure 3-25 for the location of this DIP switch. You can use this switch to clear the Cisco CSP 2100's CMOS settings in the case of a system hang. For example, if the Cisco CSP 2100 hangs because of incorrect settings and does not boot, use this jumper to invalidate the settings and reboot with defaults.

Caution Clearing the CMOS removes any customized settings and might result in data loss. Make a note of any necessary customized settings in the BIOS before you use this clear CMOS procedure.

Step 1 Power off the Cisco CSP 2100 as described in Shutting Down and Powering Off the Cisco CSP 2100, page 3-7.

Step 2 Disconnect all power cords from the power supplies.

Step 3 Slide the Cisco CSP 2100 out the front of the rack far enough so that you can remove the top cover. You might have to detach cables from the rear panel to provide clearance.

Caution If you cannot safely view and access the component, remove the Cisco CSP 2100 from the rack.

Step 4 Remove the top cover as described in Removing and Replacing the Cisco CSP 2100 Top Cover, page 3-8.

Step 5 Slide the clear CMOS DIP switch from position 4 to the closed position (see Figure 3-25).

Step 6 Reinstall the top cover and reconnect AC power cords to the Cisco CSP 2100. The Cisco CSP 2100 powers up to standby power mode, indicated when the Power LED on the front panel is amber.

Step 7 Return the Cisco CSP 2100 to main power mode by pressing the **Power** button on the front panel. The Cisco CSP 2100 is in main power mode when the Power LED is green.

Note You must allow the entire Cisco CSP 2100, not just the service processor, to reboot to main power mode to complete the reset. The state of the jumper cannot be determined without the host CPU running.

Step 8 Press the **Power** button to shut down the Cisco CSP 2100 to standby power mode, and then remove AC power cords from the Cisco CSP 2100 to remove all power.

Step 9 Remove the top cover from the Cisco CSP 2100.

Step 10 Slide the clear CMOS DIP switch from the closed position back to default position 4 (see Figure 3-25).

Note If you do not move the jumper, the CMOS settings are reset to the default every time that you power-cycle the Cisco CSP 2100.

Step 11 Replace the top cover, replace the Cisco CSP 2100 in the rack, replace power cords and any other cables, and then power on the Cisco CSP 2100 by pressing the **Power** button.