Cisco Video Surveillance 6000P IP Camera Installation Guide

Americas Headquarters
Cisco Systems, Inc.
170 West Tasman Drive
San Jose, CA 95134-1706
USA
http://www.cisco.com
Tel: 408 526-4000
800 553-NETS (6387)
Fax: 408 527-0883

Text Part Number: OL-28118-01

Cisco Video Surveillance 6000P IP Camera Installation Guide, Release 4.8(1)

CONTENTS

INDEX

Preface

Overview

This document, *Cisco Video Surveillance 6000P IP Camera Installation Guide*, provides information about installing and deploying the Cisco Video Surveillance 6000P High-Definition IP Camera.

Organization

This manual is organized as follows:

Chapter 1, "Overview"	Provides an overview of the IP camera and its features.
Chapter 2, "Camera Installation"	Provides instructions for physically installing the IP camera.
Chapter 3, "Performing the Initial Setup of the IP Camera"	Provides instructions for performing the initial network setup of the IP camera.
Chapter 4, "Camera Management"	Provides instructions for accessing and understanding the IP camera user interface, adjusting its focus and, powering the IP camera on and off, and resetting the IP camera.

Obtaining Documentation, Obtaining Support, and Security Guidelines

For information about obtaining documentation, submitting a service request, and gathering additional information, see the monthly *What's New in Cisco Product Documentation*, which also lists all new and revised Cisco technical documentation, at:

http://www.cisco.com/en/US/docs/general/whatsnew/whatsnew.html

Subscribe to the *What's New in Cisco Product Documentation* as a Really Simple Syndication (RSS) feed and set content to be delivered directly to your desktop using a reader application. The RSS feeds are a free service and Cisco currently supports RSS version 2.0.

CHAPTER 1

Overview

This chapter describes the Cisco Video Surveillance 6000P High-Definition IP Camera, and includes the following topics:

Introduction

The Cisco Video Surveillance 6000P IP camera offers 1080p HD resolution with superb image quality. The camera can capture a more comprehensive view than a standard VGA camera, significantly reducing the number of cameras required. It is especially suitable for monitoring wide open spaces such as building entrances, airports, or applications requiring accurate identification.

The 6000P IP camera employs many advanced features to allow users to fully enjoy the high definition video. With high performance H.264//MJPEG compression technology, it offers high-quality video in full HD @ 30fps with a minimum of bandwidth consumption.

The 6000P IP camera comes with an advanced P-Iris lens, which controls the iris opening with extreme precision at an optimal level at all times via the built-in stepper motor, resulting in superior sharpness and depth of field as well as image quality.

The 6000P IP camera features a removable IR-cut filter, maintaining clear images 24 hours a day. Also featuring a myriad of other high-end features such as SD/SDHC card slot, PoE, and multiple streams, the 6000P IP camera is indisputably the top choice for reliable and high performance megapixel surveillance.

Package Contents

The Cisco Video Surveillance IP Camera package includes the following items:

- Camera (qty. 1)
- L-type hex key for Back Focus (qty. 1)
- L-type hex key for SD (qty. 1)
- Cisco Pointer Card (qty. 1)
- Cisco RoHS Doc (qty. 1)

- Power Connector (qty. 1)
- Identification labels (qty. 3)

IP Camera Physical Details

Front View

Figure 1-1 and the table that follows describe the front view of the IP camera.

Figure 1-1 Front View of IP Camera

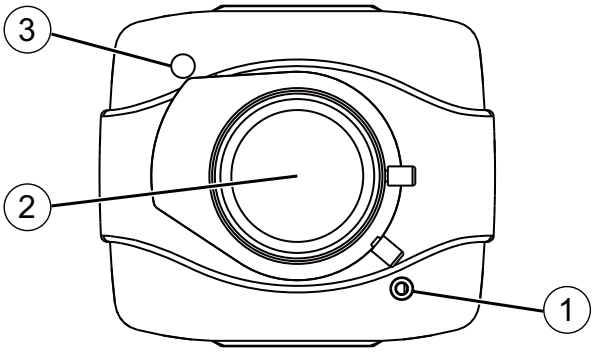

1	Internal microphone	Built-in microphone.
2	Camera lens	The IP camera supports a variety of C- and CS-mount lenses. For best performance, Cisco recommends that you use a P-iris lens.
3	Light sensor	Senses the level of ambient light to determine when to switch day/night mode.

Back View

Figure 1-2 and the table that follows describe the back view of the IP camera.

Figure 1-2 Back View of IP Camera

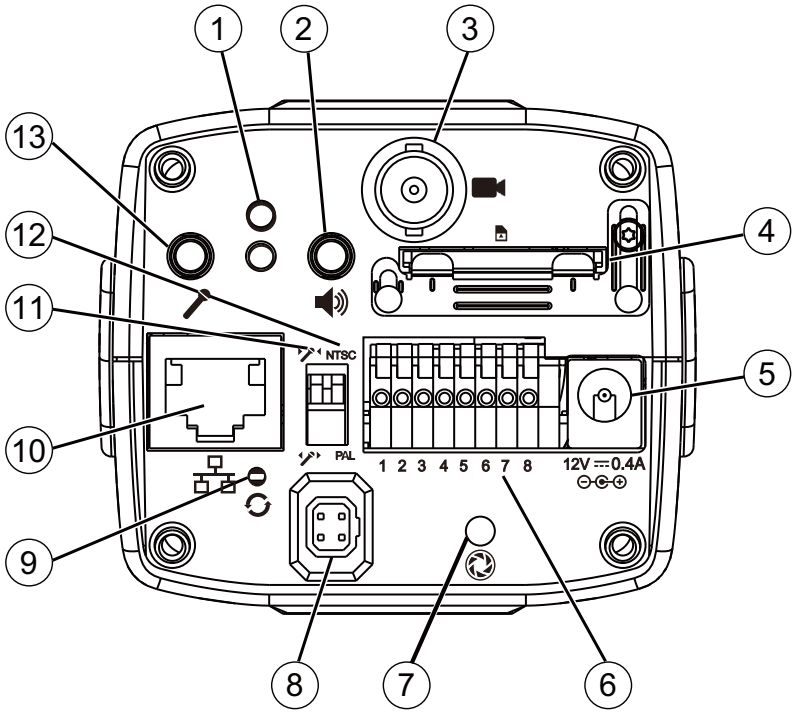

1	Status LEDs	The top LED lights to indicate network activity and the bottom LED lights to indicate power
2	Audio out	Audio output port for the IP camera.
3	BNC video out	Connects to an optional video monitor that has a BNC connector
4	SD/SDHC card slot	The IP camera is compliant with Micro SD/SDHC (up to 32GB) and other preceding standard SD cards.
5	Power cord socket	Connection to an optional PoE power injector if your router or switch does not support PoE
6	General Purpose I/O (GPIO) terminal block	GPIO terminal block that is used to connect external input and output devices. For more information, see Figure 1-3.
7	Focus assist button	Used in conjunction with an analog display to fine tune the IP camera focus.
8	P-iris lens connector	Connection for the cable from a P-iris lens. For more information, see Figure 1-4.

9	Recessed reset button	Recessed button that reboots the IP camera or resets it to a default state. You can use a pin or paper clip to depress it. Depending on how long you depress the recessed reset button, you can do either of the following: • Reset—Press and release the recessed reset button. Wait for the IP Camera to reboot. • Restore—Press and hold the recessed reset button until the status LED rapidly blinks. All settings will be restored to factory default. Upon successful restoration, the status LED will blink green and red during normal operation.
10	Ethernet 10/100 RJ45 socket	Accepts a standard LAN cable to connect the IP camera to a 10/100BaseT router or switch.
11	Microphone switch	Switches the microphone operation between the following options: • Internal (up)—Switches to the built-in internal microphone on the IP camera • External (down)—Switches to the external Microphone In connector
12	Video output switch	Switches the video output between to following standards: • NTSC 60Hz (up)—switches camera operation to the National Television System Committee (NTSC) standard. • PAL 50Hz (down)—switches camera operation to the Phase Alternating Line (PAL) standard.
13	Audio in	Audio input port for the IP camera.

General Purpose I/O Terminal Block

Figure 1-3 shows the pin locations and descriptions.

Figure 1-3 GPIO Terminal Block Pin Locations and Descriptions

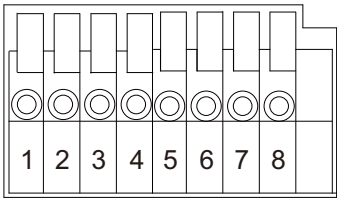

Pin	Description
1	Power +12V
2	Digital Output
3	Digital Input
4	Ground
5	AC 24V Input
6	AC 24V Input
7	RS-485+
8	RS-485–

P-iris Lens Connector Pinouts

Figure 1-4 describes the pinouts of the P-iris lens connector on the IP camera.

Figure 1-4 P-iris Lens Connector Pinouts

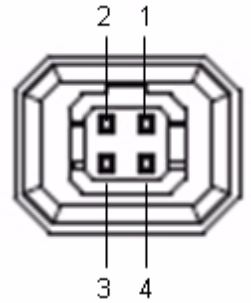

Pin	Function
1	Damp –
2	Damp +
3	Drive +
4	Drive –

P-iris Lens

Figure 1-5 and the table that follows describe the P-iris lens for the IP camera.

Figure 1-5 P-iris Lens

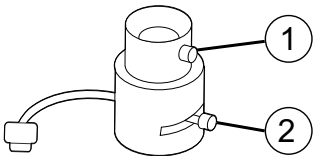

1	Focus Controller	Adjusts the focus range for the IP camera field of view.
2	Zoom controller	Adjusts the zoom factor for the IP camera field of view.

CHAPTER 2

Camera Installation

This chapter provides information and instructions for installing the Cisco Video Surveillance 6000P IP Camera, and includes the following topics:

Installation Guidelines

This section describes how to install the IP camera. Before installing, review these guidelines:

- The IP camera requires a network cable and a connection to a standard 10/100BaseT router or switch. To power the IP camera with Power over Ethernet (PoE), a switch must be 802.3af compliant.
- If you are using the IP camera on a network connection that does not provide PoE, you must use a Cisco 12 VDC power adapter (Cisco part number CIVS-PWRPAC-12V) or a third-party 24 VAC power adapter.
- If you are using an input device, output device, or pan/tilt control device, you must configure additional settings after installing and performing the initial set up of the IP camera before the external device can fully operate. For detailed information about these settings, see the *Cisco Video Surveillance 6000 Series IP Camera Configuration Guide*.
- If you do not connect an external device (input, output, or pan/tilt control) when you perform the following installation procedure, you can install any of these devices later.

Warnings Before Installation

- **Power off the Network Camera as soon as smoke or unusual odors are detected.**

  Contact your distributor in the event of this happening.

- **Keep the Network Camera away from water. If the Network Camera becomes wet, power off immediately.**

  Contact your distributor in the event of this happening.

- **Do not place the Network Camera around heat sources, such as a television or oven.**

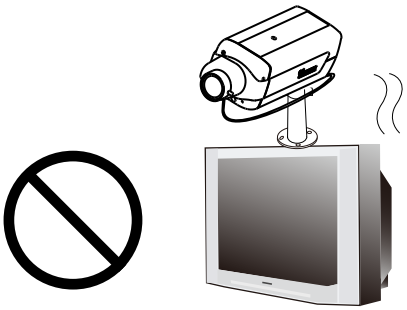

- **Refer to your user's manual for the operating temperature.**

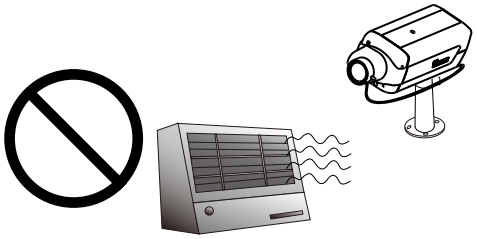

- **Keep the Network Camera away from direct sunlight.**

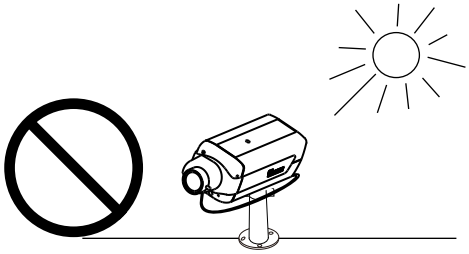

- **Do not place the Network Camera in high humidity environments.**

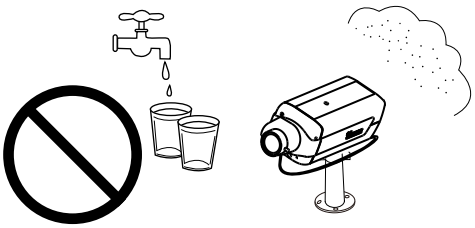

- **Do not place the Network Camera on unsteady surfaces.**

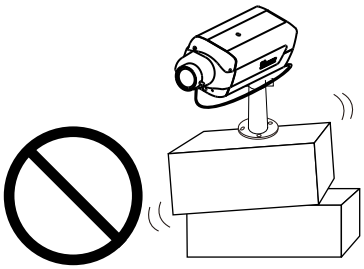

- **Do not touch the Network Camera during a lightning storm.**

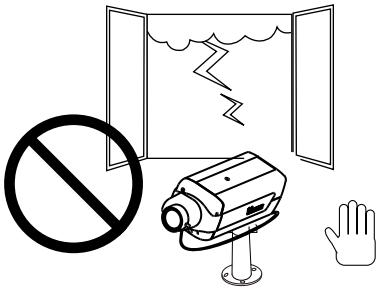

- **Do not disassemble the Network Camera.**

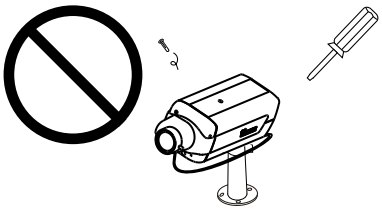

- **Do not drop the Network Camera.**

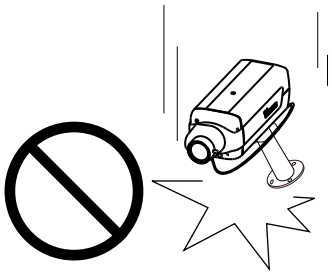

- **Do not insert sharp or tiny objects into the Network Camera.**

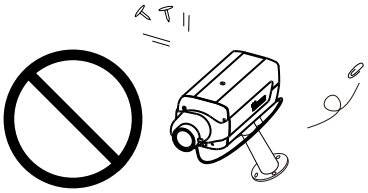

Warning **Installation of the equipment must comply with local and national electrical codes.** Statement 1074

Warning **The power supply must be placed indoors.** Statement 331

Note If you use the IP camera outdoors, place the camera and the power supply in a suitable NEMA enclosure.

Warning **This product must be connected to a power-over-ethernet (PoE) IEEE 802.3af compliant power source or an IEC60950 compliant limited power source.** Statement 353

Caution Inline power circuits provide current through the communication cable. Use the Cisco provided cable or a minimum 24AWG communication cable.

Note The power adapter that you use with the IP camera must provide power that is within +/–10% of the required power.

Note The equipment is to be connected to a Listed class 2, limited power source.

Installing the IP Camera

To install the Cisco Video Surveillance 6000P IP Camera, perform the following steps:

Procedure

Step 1 Turn the lens clockwise into the lens opening until it stops (see Figure 2-1). If necessary, turn it counterclockwise slowly until it gets the best attitude. The IP camera accepts CS-mount lenses with a lens protrusion of up to 5 mm.

Figure 2-1 Mounting the IP Camera Lens

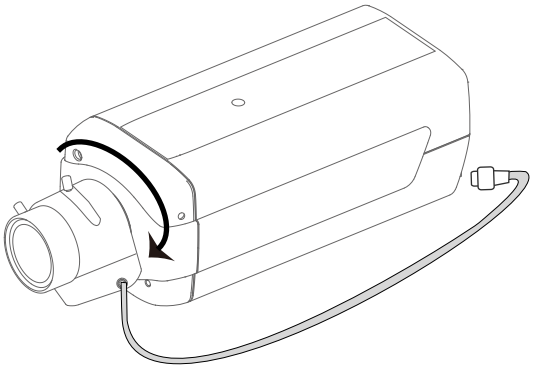

Ensure that the lens is clean because any dirt may degrade the quality of video images.

Note Save the lens opening dust cap and replace the dust cap if you remove the lens.

Step 2 Connect the P-iris lens cable to the P-iris lens connector on the back of the IP camera (see Figure 2-2).

Figure 2-2 Mounting the IP Camera Lens

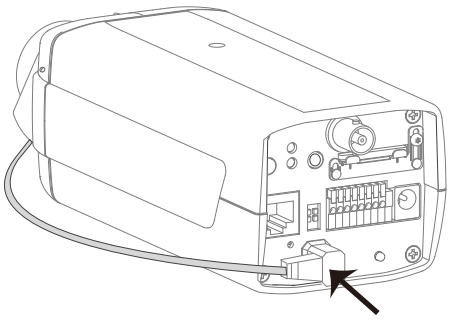

Step 3 *Optional.* Use the GPIO terminal block ports on the back of the IP camera to connect an external device that triggers alarms (connect through input port) or responds to alarms (connect through output port). Figure 2-3 shows the GPIO terminal block pin locations and descriptions.

Figure 2-3 GPIO Terminal Block Pin Locations and Descriptions

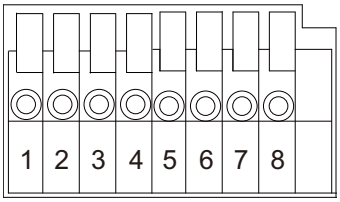

Pin	Description
1	Power +12V
2	Digital Output
3	Digital Input
4	Ground
5	AC 24V Input
6	AC 24V Input
7	RS-485+
8	RS-485–

Step 4 Connect an STP (shielded twisted pair) Category 5 or higher network cable to the LAN port on the back of the camera and to a 10/100/BaseT router or switch.

If your network provides PoE, the IP camera powers on. Skip to Step 6.

Step 5 If you are using the IP camera on a network connection that does not provide PoE, connect a 12 VDC power adapter to the camera using the provided power connector.

Step 6 Wait for the camera to boot and check the LEDs on the IP camera.

- The red status LED lights steadily.
- The green network LED blinks repeatedly.

Step 7 Mount the IP camera in the desired location.

Connect the mounting device to the threaded mounting hole on the bottom or top of the IP camera, depending on your installation requirement.

Step 8 *Optional.* Use mini cable with BNC connector to temporarily attach an NTSC or PAL compliant analog video display device to the analog video out port on the rear of the camera and adjust the IP camera field of view.

Note The mini cable with BNC adapter is included in the audio/video cables accessory kit, which you can purchase from Cisco (Cisco part number CIVS-IPCA-1021=).

Analog video is enabled by default to allow you to adjust the camera field of view during installation. However, it is not supported as a normal camera feed and is automatically disabled when any of the following camera settings are made:

- The primary video stream frame rate is set higher than 15 fps.
- The secondary video stream is enabled.

Note We recommend that you disable analog video after installation. To disable analog video, see the *Cisco Video Surveillance 6000 Series IP Camera Configuration Guide*.

After you install the IP camera, follow the instructions in Chapter 3, "Performing the Initial Setup of the IP Camera" to access and configure the camera.

CHAPTER 3

Performing the Initial Setup of the IP Camera

After you install IP camera as described in the Chapter 2, "Camera Installation," or after you perform a factory reset procedure, you must access the IP camera and make initial configuration settings. These settings include administrator and root passwords, and whether the IP camera can be accessed through an HTTP connection in addition to the default HTTPS (HTTP secure) connection.

To make these configuration settings, you connect to the IP camera from any PC that is on the same network as the IP camera. The PC must meet these requirements:

- Operating system—Microsoft Windows 7 (32-bit and 64-bit)
- Browser—Internet Explorer 8.0 (32-bit only)

In addition, you must know the IP address and default login credentials of the IP camera. By default, when the IP camera powers on, it attempts to obtain an IP address from a DHCP server in your network. If the camera cannot obtain an IP address through DCHP within 90 seconds, it uses a default IP address of 192.168.0.100. The default login credentials (Username/Password) are admin/admin.

To connect to the IP camera for the first time and make initial configuration settings, perform the following steps. You can change these configuration settings in the future as described in the *Cisco Video Surveillance 6000 Series IP Camera Configuration Guide*.

Before you Begin

The Microsoft .NET Framework version 2.0 or later must be installed on the PC that you use to connect to the IP camera. You can download the .NET Framework from the Microsoft website.

Procedure

Step 1 Start Internet Explorer, enter **HTTPS://*ip_address*** in the address field, and press **Enter**.

Replace *ip_address* with the IP address that the IP camera obtained through DHCP or, if the camera was unable to obtain this IP address, enter **192.168.0.100**.

The Login window appears.

Step 2 Enter the default login credentials:

Username: **admin**

Password: **admin**

The Initialization window appears.

Step 3 In the Password and Confirm Password fields of the admin row, enter a password for the IP camera administrator.

You must enter the same password in both fields. The password is case sensitive and must contain at least eight characters, which can be letters, numbers, and special characters, but no spaces. Special characters are: ! " # $ % & ' ( ) * + , - . : ; < = > ? @ [\ ] ^ _ ` { | } ~.

Step 4 In the Password and Confirm Password fields of the Root row, enter a password that is used when accessing the IP camera through a Secure Shell (SSH) connection.

You must enter the same password in both fields. The password is case sensitive and must contain at least eight characters, which can be letters, numbers, and special characters, but no spaces. Special characters are: ! " # $ % & ' ( ) * + , - . : ; < = > ? @ [\ ] ^ _ ` { | } ~.

You use the root password if you need to troubleshoot the IP camera through a SSH connection with the assistance of the Cisco Technical Assistance Center.

Step 5 In the Access Protocols area, check the **Enable HTTP** check box if you want to allow both HTTP and HTTPS connections to the IP camera.

By default, only the Enable HTTPS check box is checked, which allows only HTTPS (secure) connections to the IP camera.

Step 6 Click **Apply**.

The IP camera reboots and the Login window appears.

Step 7 After the IP camera reboots, start Internet Explorer and, in the Address field, enter the following:

protocol*://*ip_address

where:

- *protocol* is **HTTPS** or **HTTP**. (You can use HTTP only if you enabled it in Step 5.)
- *ip_address* is the IP address that you used in Step 1.

Step 8 If you are prompted to install ActiveX controls, which are required to view video from the IP camera, follow the on-screen prompts to do so.

The Home (System Information) window appears.

CHAPTER 4

Camera Management

This chapter provides information and instructions for managing the Cisco Video Surveillance 6000P IP Camera, and includes the following topics:

Understanding the IP Camera User Interface

After you log in to the IP camera, you can access the IP camera windows and perform a variety of administrative and user procedures.

The links and activities that you can see and access in the IP camera windows depend on your IP camera privilege level.

- Administrator—Can access all IP camera windows, features, and functions.
- Viewer—Can access the Camera Video & Control window with limited controls, and can access the **Refresh**, **Logout**, **About**, and **Help** links from that window.

IP Camera Window Links

The IP Camera user interface includes links that you use to access various windows and perform other activities. Table 4-1 describes each link and lists the IP camera privilege level that you must have to access the link.

Table 4-1 Links in the IP Camera Windows

Link	Description	Privilege Level
Refresh	Updates the information in the window that is currently displayed.	Administrator User
Home	Displays the Home window.	Administrator

Table 4-1 Links in the IP Camera Windows (continued)

Link	Description	Privilege Level
View Video	Displays the Camera Video & Control window. You may be prompted to install ActiveX controls when trying to access this window for the first time. ActiveX controls are required to view video from the IP camera. Follow the on-screen prompts to install ActiveX controls.	Administrator User
Setup	Provides access to the configuration menus for the IP camera.	Administrator
Logout	Logs you out from the IP camera.	Administrator User
About	Displays a pop-up window with model, version, and copyright information for the IP camera.	Administrator User
Help	Displays reference information for the window that is currently displayed.	Administrator User

IP Camera Windows

The IP camera user interface includes these main windows:

- Home window—Displays the system information that is described in Table 4-2.
- Setup window—Provides access to the IP camera configuration windows.
- Camera Video & Control window—Displays live video from the camera and lets you control a variety of camera and display functions.

Table 4-2 Home Window Information

Field	Description
General Information	
ID	Identifier of the IP camera.
Name	Name of the IP camera.
Current Time	Current date and time of the IP camera.
S/N	Serial number of the IP camera.
Firmware	Version of the firmware that is installed on the IP camera.
Codec	Version of the codec that is running on the IP camera.
Part Number	Cisco manufacturing part number of the IP camera.
Top Assembly Revision	Cisco assembly revision number.
Network Status	
MAC Address	MAC address of the IP camera.
Configuration Type	Method by which the IP camera obtains its IP address.
LAN IP	IP address of the LAN to which the IP camera is connected.
Subnet Mask	Subnet mask of the LAN to which the IP camera is connected.
Gateway Address	IP address of the gateway through which the IP camera is connected.
Primary DNS	IP address of the primary DNS server, if configured for the IP camera.
Secondary DNS	IP address of the secondary DNS server, if configured for the IP camera.
IO Port Status	
Input Port 1	Current state of input port 1 on the IP camera.
Output Port 1	Current state of output port 1 on the IP camera.
Stream 1 and Stream 2	
User	IP camera user name of each user who is accessing the primary video stream (Stream 1) or the secondary video stream (Stream 2) through a client PC or a third-party device. Be default, users appear in order of start time. To displays users in ascending order of any information in any corresponding column, click the column heading. Click a column heading again to reverse the display order.
IP Address	IP address of the client device.
Start Time	Time and date that the client accessed the video stream for this session.
Elapsed Time	Length of time that the client has been accessing the video stream.

Powering the IP Camera On or Off

The IP camera does not include an on/off switch. You power it on or off by connecting it to or disconnecting it from a power source. When you power off the IP camera, configuration settings are retained.

To power on the IP camera, take either of these actions:

- Use an STP (shielded twisted pair) Category 5 or higher network cable to connect the IP camera to a network switch that provides 802.3af compliant PoE.
- Use an optional 12 VDC or 24VAC power adapter to connect the IP camera to a wall outlet

To power off the IP camera, take either of these actions:

- If the IP camera is receiving PoE, disconnect the network cable
- If the IP camera is receiving power through the power adapter, unplug the adapter from the wall or disconnect it from the camera

Resetting the IP Camera

You reset the IP camera by pressing the Reset button on the IP Camera (see Figure 1-1 on page 1-2). There are various reset types, as described in Table 4-3.

You also can also perform these reset operations from the Maintenance Settings window as described in the *Cisco Video Surveillance 6000 Series IP Camera Configuration Guide*.

Table 4-3 Resetting the IP Camera

Reset Type	Procedure	Remarks
Reboot.	Press and immediately release the Reset button.	This action is equivalent to powering the IP camera down and then powering it up. Settings that are configured for the IP camera are retained.
Factory reset.	Press and hold the button for at least 15 seconds.	Sets all IP camera options to their default values. After you perform this procedure, follow the steps in the "Performing the Initial Setup of the IP Camera" section on page 3-1.

Viewing Live Video

After you install and set up the Cisco Video Surveillance IP Camera, you can connect to the IP camera through Internet Explorer and access the Camera Video & Control window to view live video.

The Camera Video & Control window also provides for controlling the video display, configuring preset positions, and controlling certain IP camera functions. Available controls depend on the privilege level of the user.

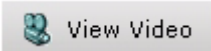

To view live video, log in to the IP camera, then click **View Video** in the IP camera Main window menu bar. The Camera Video & Control window appears. This window displays live video from the camera and lets you control a variety of camera and display functions.

The controls that you see in the Camera Video & Control window depend on your IP camera privilege level and the configurations settings for the IP camera. Users with the Administrator privilege can access all controls. Users with the Viewer privilege do not have access to the following controls:

- Video image controls
- Motion detection controls

Table 4-4 describes the controls in the Camera Video & Control window.

Table 4-4 Camera Video & Control Window Controls

Control	Description
Video controls	
Video Codec drop-down list 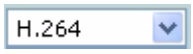	Choose the codec for video transmission (H.264 or MJPEG). You can choose H.264 only if the primary video stream (channel 1) is enabled. You can choose MJPEG only if the secondary video stream (channel 2) is enabled.
Video Resolution drop-down list 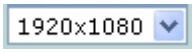	Choose the resolution for video transmission. The resolutions in this drop-down list depend on the video standard that you selected. The default value for H.264 is 1920 x 1080. The default value for MJPEG is 704 x 480. You cannot configure a secondary stream if you configure this resolution for 1920 x 1080.
Right Arrow toggle button 	Click the Right Arrow to display the video image controls. The button changes to the Left Arrow button. Click the Left Arrow button to hide the video image controls. The button changes to the Right Arrow button.
Left Arrow toggle button 	
Video image controls **Note** These controls appear when you click the Right Arrow in the Video Control area.	
Brightness slider 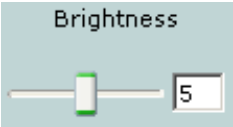	To control the brightness of the video image, drag the slider, or enter a value from 1 through 10 and press the **Enter** key. A higher value increases the brightness and a lower value decreases the brightness. For example, if the IP camera is facing a bright light and the video appears too dark, you can increase the brightness. The default value is 5.
Contrast slider 	To control contrast of the video image, drag the slider, or enter a value from 1 through 10 and press the **Enter** key. A higher value increases the contrast and a lower value decreases the contrast. The default value is 5.

Table 4-4 Camera Video & Control Window Controls (continued)

Control	Description
Sharpness slider 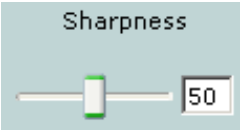	To control the sharpness of the video from the IP camera, drag the slider, or enter a value from 1 through 100 and press the **Enter** key. A higher value increases the sharpness and a lower value decreases the sharpness. The default value is 50.
Saturation slider 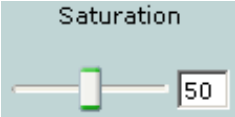	To control the saturation of the video from the IP camera, drag the slider, or enter a value from 1 through 100 and press the **Enter** key. A higher value increases the saturation and a lower value decreases the saturation. High saturation provides a vivid, intense color for a video image. With less saturation, the video image appears more muted and gray. The default value is 50.
Restore button	Resets white balance, brightness, contrast, sharpness, saturation, and hue to their default values.
Image tools	
Hotspot Zoom button 	Click this latch button to enables the digital zoom feature, which provides five-step digital zooming in for the normal (not full screen) video display. Click this button again to disable the digital zoom feature. To perform a digital zoom, engage the **Hotspot Zoom** button and click the video display. The first five clicks zoom the display. The sixth click returns to unzoomed display.
Hotspot Pan/Tilt button 	Click this latch button to enable the hotspot pan/tilt feature, which lets you pan and tilt the IP camera toward a point that you click in the video display. To perform a hotspot pan/tilt action, engage the **Hotspot Pan/Tilt** button, then click the video image at the location toward which you want the IP camera to pan and tilt. This feature require that the IP camera be installed with a pan/tilt mount that supports the Pelco D protocol and that pan and tilt functions are enabled.
Save Snapshot button 	Captures and saves a the current video image as a .gif file or a .jpg file in the location of your choice and with the file name of your choice. When you click this button, the Snapshot window appears. Click **Save** and follow the on-screen prompts to save the image with the name and in the location that you want.
Flip button 	Rotates the video image by 180 degrees.
Mirror button 	Reverses the video image.

Table 4-4 Camera Video & Control Window Controls (continued)

Control	Description
Restore button	Displays the default video image, which is not rotated and not reversed.
Full Screen button Full Screen	Displays the video image in full screen mode. To return to normal display mode, click the full screen image.
Motion detection	
Up Arrow toggle button	Click the Up Arrow to display the motion detection controls. The button changes to the Down Arrow button. Click the Down Arrow button to hide the motion detection controls. The button changes to the Up Arrow button.
Down Arrow toggle button	
Motion detection controls **Note** These controls appear when you click the Up Arrow in the Motion Detection area and are available only viewing the primary (H.264) stream.	
Enable Motion Detection check box	Enables the motion detection feature and displays a grid over the video image. When motion detection is enabled, the IP camera monitors activity in the video field areas that you specify. If activity at a defined level occurs in any of these areas, the IP camera generates an alert and takes the configured actions. To designate specific areas that the IP camera monitors for activity, select the areas by clicking each grid cell over the area. A red border indicates a selected area. To deselect an area, click it again. You can configure the following levels for areas that the IP camera monitors for activity: • Sensitivity—Designates the relative amount of activity that the IP camera must detect in the area before it generates an alert. A lower value means that more, or faster, activity is required to trigger an alert. A higher value means that less, or slower, activity is required. The default value is 80. • Threshold—Designates the percentage of pixels that the IP camera must identify as changed in the area before it generates an alert. The camera detects pixel changes at the defined sensitivity level. The default threshold value is 10. To configure sensitivity or threshold, right-click a grid cell that has a red border and then drag the Sensitivity and Threshold sliders to the desired values. Alternatively, enter a value from 1 through 100 for an option and press the **Enter** key. To reset the sensitivity and threshold to their default values of 50, click **Restore**. These configuration settings affect the cell that you select. If the cell is part of a group of horizontally or vertically (but not diagonally) adjacent cells, the settings affect all cells in the group.

Table 4-4 Camera Video & Control Window Controls (continued)

Control	Description
Full Screen check box	Becomes available when you click check Enable Motion Detection check box. Check the Full Screen check box to cause the IP camera to examine the entire video field for activity. You can configure the following items for this video field: • Sensitivity—Designates the relative amount of activity that the IP camera must detect in the area before it generates an alert. A lower value means that more, or faster, activity is required to trigger an alert. A higher value means that less, or slower, activity is required. The default value is 80. • Threshold—Designates the percentage of pixels that the IP camera must identify as changed in the area before it generates an alert. The camera monitors for pixel changes at the defined sensitivity level. The default threshold value is 10. To configure sensitivity or threshold, right-click anywhere in the video field border and then drag the Sensitivity and Threshold sliders to the desired values. Alternatively, enter a value from 1 through 100 for an option and press the **Enter** key. To reset the sensitivity and threshold to their default values of 50, click **Restore**.
Restore button	Deselects all areas in the video field that you have selected for motion detection monitoring.
Save Settings button 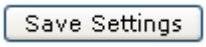 	Save the current motion detection configuration.

INDEX

M

P

R

S

T

V