Cisco 4-Port Channelized OC-12 Line Card Installation and Configuration Guide

March 2009

Americas Headquarters
Cisco Systems, Inc.
170 West Tasman Drive
San Jose, CA 95134-1706
USA
http://www.cisco.com
Tel: 408 526-4000
800 553-NETS (6387)
Fax: 408 527-0883

Text Part Number: OL-17434-01, Rev A0

Cisco 4-Port Channelized OC-12 Line Card Installation and Configuration Guide

CONTENTS

Preface

Revised: March 2009, OL-17434-01

The *Cisco 4-Port Channelized OC-12 Line Card Installation and Configuration Guide* provides information related to installing, removing, and troubleshooting the 4-Port Channelized OC12 Line Card.

The preface contains the following sections:

- Changes to This Document
- Obtaining Documentation and Submitting a Service Request
- Objectives
- Organization

Changes to This Document

Table -1 lists the technical changes made to this document since it was first printed.

Table -1 Changes to This Document

Revision	Date	Change Summary
OL-17434-01	March 2009	Initial release of this document.

Obtaining Documentation and Submitting a Service Request

For information on obtaining documentation, submitting a service request, and gathering additional information, see the monthly *What's New in Cisco Product Documentation*, which also lists all new and revised Cisco technical documentation, at:

http://www.cisco.com/en/US/docs/general/whatsnew/whatsnew.html

Subscribe to the *What's New in Cisco Product Documentation* as a Really Simple Syndication (RSS) feed and set content to be delivered directly to your desktop using a reader application. The RSS feeds are a free service and Cisco currently supports RSS version 2.0.

Objectives

This document provides an overview of the 4-Port Channelized OC12 Line Card, prerequisites for installation, how to install the 4-Port Channelized OC12 Line Card and how to troubleshoot the installation.

Organization

This document contains the following chapters:

Section	Title	Description
Chapter 1	Overview: 4-Port Channelized OC-12 Line Card	Provides an overview, hardware specifications, LED details, and interface specifications of the 4-Port Channelized OC12 Line Card.
Chapter 2	Preparing for Installation	Describes the required tools, equipment, and safety guidelines for installing the line card.
Chapter 3	Installing and Removing a Line Card	Describes the procedure for installing and removing a line card on a Cisco 12000 XR Series Router.
Chapter 4	Verifying and Troubleshooting the Line Card Installation	Provides the information for troubleshooting the installation of line cards.

CHAPTER 1

Overview: 4-Port Channelized OC-12 Line Card

Revised: March 2009, OL-17434-01

4-Port Channelized OC-12 Line Card Overview

The 4-Port Channelized OC-12/STM-4 ISE line card provides Cisco XR 12000 Series Routers with four OC-12c/STM-4c ports that can be channelized to DS3/E3, OC-3c/STM-1c, or OC-12c/STM-4c. The line card supports both SONET and SDH framing and provides DS-3/E3 aggregation for the Cisco XR 12000 Series Router. For SDH, both AU-3 and AU-4 mappings are supported. Table 1-1 lists the mappings and channelization that are supported on the 4-Port Channelized OC-12/STM-4 ISE Line Card.

Table 1-1 Supported SONET and SDH Channelization Modes

SONET Channelization	SDH-AU3 Channelization	SDH-AU4 Channelization
STS-12c	STM-4, AU4-4-4c	STM-4
STS-3c	STM-1, AU4	STM-1
STS-1:DS-3[1]	STM-1 and AU3:VC-3:DS-3/E3	STM-1 and AU4:TUG-3:VC3:DS-3/E3

1. All valid combinations of these modes are supported

The line card interfaces with the Cisco XR 12000 Series Router switch fabric and provides a full-duplex short cable (SC), single-mode, intermediate-reach optical interface. Figure 1-1 shows the front view of this line card.

Figure 1-1 4-Port Channelized OC-12 line card

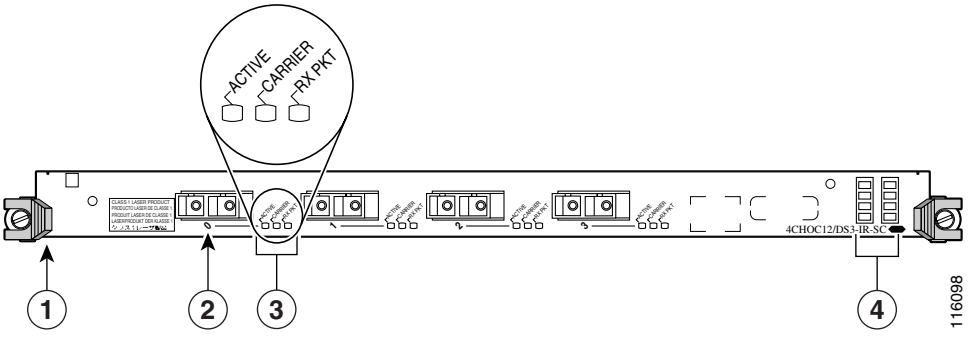

1	Ejector lever (one at each end)	**3**	Status LEDs
2	Port 0	**4**	Alphanumeric LEDs

Router Hardware Installation

For Cisco XR 12000 Series Router hardware installation and configuration information, refer to the installation and configuration guide for your router. The guide includes information on the router switch fabric and how it affects the operation of line cards, as well as line card slot locations, slot width, and other requirements.

Supported Platforms

The 4-Port Channelized OC-12 Line Cards are supported on all Cisco XR 12000 Series Routers.

Note To support the requirements of this line card, the Cisco XR 12000 Series Router must have at least one clock and scheduler card (CSC) installed. For additional information, refer to the installation and configuration guide for your Cisco XR 12000 Series Router.

Product Specifications

Table 1-2 provides specifications regarding the engine supported, the Cisco IOS XR software release, the chassis supported, and per-chassis port densities.

Table 1-2 Product Specifications

Line Card	Forwarding Engine	Cisco IOS XR Software Release	Chassis supported	Per-Chassis Port Densities
4-Port Channelized OC-12 Line Card	Engine 3	Cisco IOS XR Software Release 3.8.0	Cisco XR 12006	5 maximum ports per chassis
			Cisco XR 12010	9 maximum ports per chassis
			Cisco XR 12016	15 maximum ports per chassis
			Cisco XR 12404	3 maximum ports per chassis
			Cisco XR 12406	5 maximum ports per chassis
			Cisco XR 12410	9 maximum ports per chassis
			Cisco XR 12416	15 maximum ports per chassis
			Cisco XR 12810	9 maximum ports per chassis
			Cisco XR 12816	15 maximum ports per chassis

Physical and Electrical Specifications

Table 1-3 provides details about the physical and electrical specifications of the Cisco XR 12000 Series Router 4-Port Channelized OC-12 Line Card.

Table 1-3 Physical and Electrical Specifications

Line Card	Dimensions	Weight	Power	Memory	LEDs
4CHOC12/DS3-IR-SC	Height: 14.5 in. (36.8 cm) Depth: 18.5 in. (46.9 cm)	6.0 lb (2.7 kg)	140 W	Route: 512-MB Packet: 512-MB	Active Carrier Packet receive

Optical Specifications

Table 1-4 provides details about the optical specifications of the Cisco XR 12000 Series Router 4-Port Channelized OC-12 Line Card.

Table 1-4 Optical Specifications

Line Card	4CHOC12/DS3-IR-SC
Connector type	SC
Wavelength	1310 nm
Fiber type	Single-mode fiber (SMF)
Core size	9/125 micrometers
Cable distance	15 km
Link power budget (GE-253)	0 to 12 dB
Transmit power	-15 to -8 dBm
Receive power	-28 to -7 dBm

Ordering Information

To place an order, contact your local Cisco Systems representative or visit the ordering page on the Cisco website. Use the ordering information in Table 1-5.

Table 1-5 Ordering Information

Product Part Number	Product Name
4CHOC12/DS3-IR-SC	Cisco XR 12000 Series Router 4-Port Channelized OC-12/STM-16 (DS3) Line Card

4-Port Channelized OC-12 Line Card Hardware and Software Compatibility

For successful installation and configuration of the 4-Port Channelized OC-12 line card, ensure that the compatible hardware and the Cisco IOS XR Software Release are installed. This section provides details regarding the compatible Cisco IOS XR Software Release and the hardware revision requirements.

Cisco IOS XR Software Release Requirements

Table 1-6 lists the Cisco IOS XR software release that is compatible with the 4-Port Channelized OC-12 line card.

Table 1-6 4-Port Channelized OC-12 line card and IOS XR Software Release Compatibility

Channelized Line Card	Cisco IOS XR Software Release
4-Port Channelized OC-12 Line Card	Cisco IOS XR Software Release 3.8.0

Hardware Revision Requirements

To ensure compatibility with the software, your channelized line card should have a specific hardware revision number. The number is printed on a label affixed to the component side of the card. The hardware revision number can be displayed by using the **show diag** *0/1/cpu0* command.

Table 1-7 lists the hardware revision number for the 4-Port Channelized OC-12 Line Card.

Table 1-7 4-Port Channelized OC-12 line card Hardware Revision Requirements

Channelized Line Card	Minimum Hardware Revision Number	
4-Port Channelized OC-12/STM-16 ISE	73-7397-*yy* (where *yy* is a number from 01 to 14)	800-18816-*xx* (where *xx* is a number from 01 to 10)

4-Port Channelized OC-12 Line Card LEDs

See Figure 1-1 for the location of the LEDs on the 4-Port Channelized OC-12 line card. The different operating states of the status LEDs are shown in Table 1-8.

Table 1-8 4-Port Channelized OC-12 Line Card Status LED Descriptions

LED	Color/Activity	Description
Active	Off	Port is administratively down, or diagnostics are running.
	Solid Green	Port is administratively up.
Carrier	Off	Port is operationally down.
	Solid Green	Port is up and frames are received.
Rx PKT	Blinking Green	Line card is receiving data.

Alphanumeric LEDs

The 4-Port Channelized OC-12 Line Cards have two four-digit alphanumeric LED displays at one end of the faceplate (near the ejector lever) that display a sequence of messages indicating the state of the card. In general, the LEDs do not come on until the route processor (RP) recognizes and powers up the card. As it boots, the line card displays a sequence of messages similar to those in Table 1-9.

Note Some messages might appear in brief and for a short time. Also, some messages listed in Table 1-9 may not appear on your line card.

Table 1-9 Alphanumeric LED Messages During a Typical Initialization Sequence

LED Display[1]	Meaning	Source of LED Display
IOX RUN	Line card is enabled and ready for use.	Line Card (LC)
MBI RUN	Minimal boot image (MBI) is running.	Route Processor (RP)
MANT MoDE	Line card or router is running in a maintenance mode.	RP
DIAG LNCH	Field diagnostic is being launched.	RP
DDNL FAIL	Field diagnostic download has failed.	RP
DIAG RUN	Field diagnostic utility is running.	RP
DIAG TOUT	Field diagnostic is timed-out.	RP
DIAG PASS	Field diagnostic run has passed.	RP
DIAG FAIL	Field diagnostic run has failed.	RP
UNSU UNSU	Line card type is not supported.	RP
LOW MEM	Line card or router is running in low memory.	RP
NOTP	Line card is not present.	RP
NOPW	Line card is not powered on.	RP
PWRD	Line card is powered on.	RP
BOOT	Line card is booting.	RP
ADON	Line card is administratively down.	RP
RSET	Line card is in reset state.	RP
BRDN	Line card is being brought down.	RP
PWRD	Line card is present and is powered on.	RP
DGDL	Field diagnostic is downloading.	RP
DGUN	Field diagnostic is not running in a monitored state.	RP

1. The entire LED sequence shown in Table 1-9 might occur too quickly for you to read; therefore, this sequence is provided in tabular form as baseline information on how a line card should function at startup.

4-Port Channelized OC-12 Line Card Interface Specifications

The physical layer interface for the channelized OC-12 line card is Optical Carrier-12 (OC-12, the specification for SONET STS-12c transmission rates). The channelized OC-12 line card is designed to support both SONET and SDH mode of operation. In SONET mode, the OC-12 port can be channelized to carry STS-12c, STS-3c, STS1:DS3, or a combination of STS-3c and STS-1:DS3. In SDH mode, AU4 and AU3 are supported. By default, the controller comes up in 12xSTS-1 mode. The OC-12 line card provides a single 2.488-Mbps interface for all supported platforms.

Each channelized OC-12 line card has one pair of short cable (SC) type fiber receptacles to allow connection to single-mode optical fiber. Packet data is transported using Point-to-Point Protocol (PPP), Frame Relay, or HDLC and is mapped into the STS-12c frame (RFC 1619). The 4-Port Channelized OC-12 Line Card supports the following MIBs:

- CISCO-ENTITY-ASSET-MIB
- CISCO-ENTITY-SENSOR-MIB
- CISCO-SONET-MIB
- CISCO-ENTITY-VENDORTYPE-OID-MIB
- DS3/E3-MIB (RFC 2496)
- ENTITY-MIB
- FR DTE MIB
- IF-MIB (RFC 2863)
- MIB-2 (RFC 1213)
- SONET MIBs (RFC 3592, 2558)

CHAPTER 2

Preparing for Installation

Revised: March 2009, OL-17434-01

Preparing for Installation

Preparation for installation is presented in the following sections:

Safety Guidelines

Before you perform any procedure in this publication, review the safety guidelines in this section to avoid injuring yourself or damaging the equipment.

The following guidelines are for your safety and to protect equipment. The guidelines do not include all hazards. Be alert.

Note Review the safety warnings listed in the *Regulatory Compliance and Safety Information for Cisco 12000 Series Internet Router* publication (Document Number 78-4347-xx) that accompanied your router before installing, configuring, or maintaining a line card.

- Keep the work area clear and dust free during and after installation. Do not allow dirt or debris to enter into any laser-based components.
- Do not wear loose clothing, jewelry, or other items that could get caught in the router while working with line cards.
- Cisco equipment operates safely when it is used in accordance with its specifications and product usage instructions.

Electrical Equipment Guidelines

Follow these basic guidelines when working with any electrical equipment:

- Before beginning any procedures requiring access to the chassis interior, locate the emergency power-off switch for the room in which you are working.

- Disconnect all power and external cables before moving a chassis.
- Do not work alone when potentially hazardous conditions exist.
- Never assume that power has been disconnected from a circuit; always check.
- Do not perform any action that creates a potential hazard to people or makes the equipment unsafe; carefully examine your work area for possible hazards such as moist floors, ungrounded power extension cables, and missing safety grounds.

Telephone Wiring Guidelines

Use the following guidelines when working with any equipment that is connected to telephone wiring or to other network cabling:

- Never install telephone wiring during a lightning storm.
- Never install telephone jacks in wet locations unless the jack is specifically designed for wet locations.
- Never touch uninsulated telephone wires or terminals unless the telephone line has been disconnected at the network interface.
- Use caution when installing or modifying telephone lines.

Required Tools and Equipment

You need the following tools and parts to remove and install channelized line cards:

- Flat-blade or Phillips screwdriver
- ESD-preventive wrist or ankle strap and instructions
- Interface cables to connect the channelized line card with another router or switch

Preventing Electrostatic Discharge

Electrostatic discharge (ESD) damage, which can occur when electronic cards or components are improperly handled, results in complete or intermittent failures. Electromagnetic interference (EMI) shielding is an integral component of the line card. We recommend using an ESD-preventive strap whenever you are handling network equipment or one of its components.

The following are guidelines for preventing ESD damage:

- Always use an ESD-preventive wrist or ankle strap and ensure that it makes good skin contact. Connect the equipment end of the connection cord to an ESD connection socket on the router or to bare metal on the chassis.
- Handle channelized line cards by the captive installation screws, the provided handle, ejector levers, or the line card metal carrier only; avoid touching the board or connector pins.
- Place removed channelized line cards board-side-up on an antistatic surface or in a static shielding bag. If you plan to return the component to the factory, immediately place it in a static shielding bag.
- Avoid contact between the channelized line cards and clothing. The wrist strap protects the board from ESD voltages on the body only; ESD voltages on clothing can still cause damage.

Warning **For safety, periodically check the resistance value of the ESD strap. The measurement should be between 1 and 10 megohms.**

CHAPTER 3

Installing and Removing a Line Card

Revised: March 2009, OL-17434-01

This chapter describes how to remove the 4-Port Channelized OC-12 Line Card from its supported platform, how to install a new replacement line card, how to install and remove a line card cable management bracket, and how to connect cables.

This chapter contains the following sections:

Installation Overview

Each line card circuit board is mounted to a metal carrier and is sensitive to electrostatic discharge (ESD) damage.

Note When a slot is not in use, a blank line card must fill the empty slot to allow the router to conform to EMI requirements and to allow proper airflow across the line cards. If you plan to install a new line card in a slot that is not in use, you must first remove the blank line card.

Handling Line Cards

Caution Always handle the line card by the carrier edges and handle; never touch the line card components or component pins.

Figure 3-1 Handling a Line Card

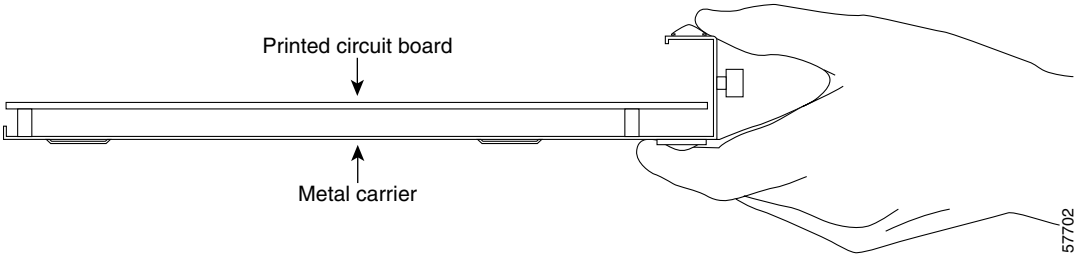

Online Insertion and Removal

The Cisco XR 12000 Series Router supports online insertion and removal (OIR) of the 4-Port Channelized OC-12 Line Card; therefore, you do not have to power down the router when removing and replacing the line card. When the 4-Port Channelized OC-12 Line Card is removed, the line card configuration is stored in the pre-config area. Relevant configuration is moved to the active area when the 4-Port Channelized OC-12 Line Card is inserted in the slot.

Note As you disengage the line card from the router, online insertion and removal (OIR) administratively shuts down all active interfaces of the line card.

Removing and Installing a Line Card

The following sections describe the procedures for removing and installing a line card:

- Guidelines for Line Card Removal and Installation, page 3-2
- Removing a Line Card, page 3-3
- Installing a Line Card, page 3-4

Note Some of the procedures in the following sections use illustrations of a Cisco 12012 Internet Router to support the descriptions of removing and installing line cards. Although the card cages of the Cisco XR 12000 Series Routers differ, the designated use of slots and the process of installing and removing a line card are basically the same. Therefore, separate procedures and illustrations for each platform are not included in this document.

Guidelines for Line Card Removal and Installation

Guidelines for line card removal and installation include the following:

- Online insertion and removal (OIR) is supported, enabling you to remove and install line cards while the router is operating. OIR is seamless to users on the network, maintains all routing information, and ensures session preservation.

Note With OIR, notifying the software or resetting the power is not required. However, you have the option of using the **shutdown** command before removing a line card.

- After you reinstall a line card, the router automatically downloads the necessary software from the route processor (RP). Next, the router brings online only those interfaces that match the current configuration and were previously configured as administratively up. You must configure all others with the **configure** command.

Caution The router may indicate a hardware failure if you do not follow proper procedures. Remove or insert only one line card at a time. Allow at least 15 seconds for the router to complete the preceding tasks before removing or inserting another line card.

After removing and inserting a line card into the same slot, allow at least 60 seconds before removing or inserting another line card.

- Line cards have two ejector levers to release the card from its backplane connector. Use the levers when you are removing the line card and to seat the line card firmly in its backplane connector when you are installing the line card. The ejector levers align and seat the card connectors in the backplane.

Caution When you remove a line card, always use the ejector levers to ensure that the connector pins disconnect from the backplane in the sequence expected by the router. Any card that is only partially connected to the backplane can halt the router.

When you install a line card, always use the ejector levers to ensure that the card is correctly aligned with the backplane connector; the connector pins should make contact with the backplane in the correct order, indicating that the card is fully seated in the backplane. If a card is only partially seated in the backplane, the router hangs and subsequently crashes.

Removing a Line Card

If you are replacing a failed line card, remove the existing line card first, then install the new line card in the same slot. To remove a line card, use Figure 3-2 as a reference and follow these steps:

Step 1 Attach an ESD-preventive wrist or ankle strap and follow its instructions for use.

Step 2 Disconnect and remove all interface cables from the ports; note the current connections of the cables to the ports on the line card.

Step 3 Detach the line card cable-management bracket from the line card.

Step 4 Use a screwdriver to loosen the captive screw at each end of the line card faceplate. (See Figure 3-2a.)

Figure 3-2 Line Card Removal and Installation

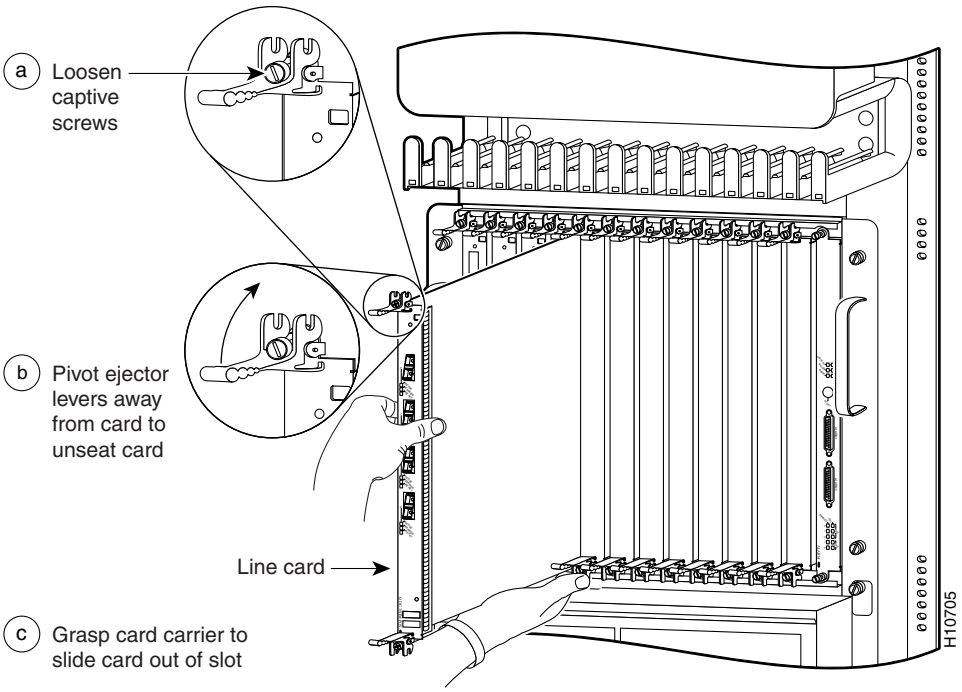

Caution When you remove a line card, always use the ejector levers to ensure that the line card connector pins disconnect from the backplane in the logical sequence expected by the router. Any line card that is only partially connected to the backplane can halt the router.

Step 5 Simultaneously pivot the ejector levers away from each other to release the line card from the backplane connector. (See Figure 3-2b.)

Step 6 Grasp the ejector levers and pull the line card halfway out of the slot.

Step 7 Grasp the line card and gently pull it straight out of the slot, keeping your other hand under the line card to guide it. (See Figure 3-2c.) Avoid touching the line card printed circuit board, components, or any connector pins.

Step 8 Place the removed line card on an antistatic mat, or immediately place it in an antistatic bag if you plan to return it to the factory.

Step 9 If the line card slot is to remain empty, install a line card blank (Product Number MAS-GSR-BLANK) to keep dust out of the chassis and to maintain proper airflow through the line card compartment. Secure the line card blank to the chassis by tightening its captive screws.

Installing a Line Card

A line card slides into almost any available line card slot and connects directly to the backplane. If you install a new line card, you must first remove the line card blank from the available slot.

Note Refer to the installation and configuration guide for your router for information on line card slot types, slot width, and slot location.

Caution The router may indicate a hardware failure if you do not follow proper procedures. Remove or insert only one line card at a time. Allow at least 15 seconds for the router to complete the preceding tasks before removing or inserting another line card.

To install a line card, follow these steps:

Step 1 Attach an ESD-preventive wrist or ankle strap and follow its instructions for use.

Step 2 Choose an available line card slot for the line card, and verify that the line card interface cable is long enough for you to connect the line card with any external equipment.

Caution To prevent ESD damage, handle line cards by the captive installation screws, the provided handle, ejector levers, or the card carrier edges only. Do not touch any of the electrical components or circuitry.

Step 3 Grasp the faceplate (or handle) of the line card with one hand and place your other hand under the card carrier to support the weight of the card; position the card for insertion into the card cage slot. Avoid touching the line card printed circuit board, components, or any connector pins.

Step 4 Carefully slide the line card into the slot until the ejector levers make contact with the edges of the card cage, then *stop* when the ejector lever hooks catch the lip of the card cage. If they do not catch, try reinserting the line card until the ejector lever hooks are fully latched. (See Figure 3-3.)

Figure 3-3 Ejector Levers

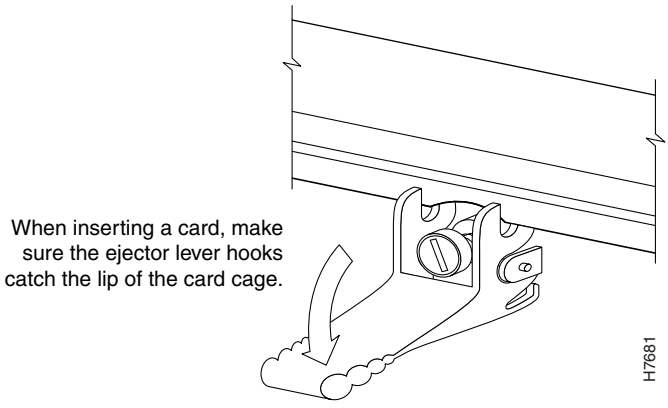

Caution When you install a line card, always use the ejector levers to ensure that the card is correctly aligned with the backplane connector, the card connector pins make contact with the backplane in the correct order, and the card is fully seated in the backplane. A card that is only partially seated in the backplane can cause the router to hang and subsequently crash.

Step 5 Simultaneously pivot both ejector levers toward each other until they are perpendicular to the line card faceplate. This action firmly seats the card in the backplane.

Step 6 Use a 3/16-inch flat-blade screwdriver to tighten the captive screw on each end of the line card faceplate to ensure proper EMI shielding and to prevent the line card from becoming partially dislodged from the backplane.

Caution To ensure adequate space for additional line cards, always tighten the captive installation screws on each newly installed line card *before* you insert any additional line cards. These screws also prevent accidental removal and provide proper grounding and EMI shielding for the router.

Step 7 Install the cable-management bracket.

Step 8 Install the interface cables.

Line Card Cable-Management Bracket

Note The illustrations in this section show various line cards, but the line card cable-management bracket installation procedure is the same regardless of the specific line card.

Cisco XR 12000 Series Routers include a cable-management system that organizes the interface cables entering and exiting the router, keeping them out of the way and free of sharp bends.

Caution Excessive bending of interface cables can damage the cables.

The cable-management system consists of two separate components:

1. A cable-management tray that is mounted on the chassis. Refer to the appropriate Cisco XR 12000 Series Router installation and configuration guide for more information on the cable-management tray.
2. A cable-management bracket that attaches to a line card.

This section describes the line card cable-management bracket. Figure 3-4 shows the single-port line card cable-management bracket; Figure 3-5 shows the multiport line card cable-management bracket.

Figure 3-4 Single-Port Line Card Cable-Management Bracket

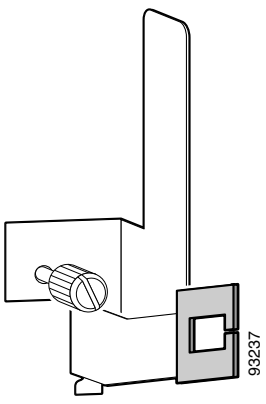

Figure 3-5 Multiport Line Card Cable-Management Bracket

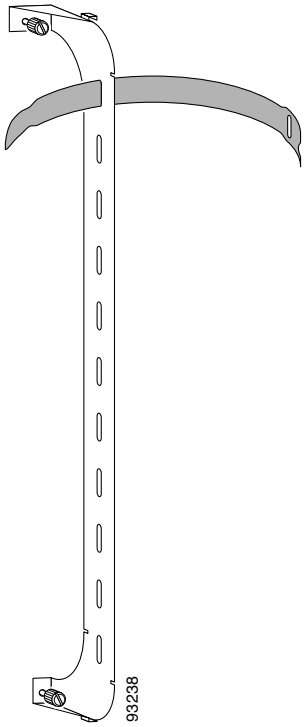

Note When shipped with spare line card orders, the cable-management bracket is not attached to the line card. You must attach the cable-management bracket to the line card before you insert the line card into the router.

Caution Do not use the cable-management bracket as a handle to pull out or push in the line card. The cable-management bracket is designed to hold the interface cables and may break if you use the bracket to push, pull, or carry the line card after it is removed from the router.

Removing and installing the line card cable-management bracket is described in the following procedures:

- Removing a Line Card Cable-Management Bracket, page 3-7
- Installing a Line Card Cable-Management Bracket, page 3-10

Removing a Line Card Cable-Management Bracket

To remove a line card cable-management bracket, follow these steps:

Step 1 Attach an ESD-preventive wrist or ankle strap and follow its instructions for use.

Step 2 Note the current interface cable connections to the ports on each line card.

Step 3 Starting with the interface cable for the bottom port on the line card, disconnect the cable from the line card interface.

Note It is not necessary to remove the interface cables from the line card cable-management bracket. The bracket (with attached cables) can be hooked to the cable-management tray or a bracket on the chassis until a new line card is installed.

Step 4 For multiport line card cable-management brackets, proceed upward and remove the interface from the Velcro strap on the end of the cable standoff. (See Figure 3-6.)

For single-port line card cable-management brackets, carefully remove the interface cable from the cable clip. (See Figure 3-7.) Avoid any kinks or sharp bends in the cable.

Step 5 Repeat Step 3 and Step 4 for all remaining interface cables, then proceed to Step 6.

Step 6 For multiport line card cable-management brackets, loosen the captive installation screw at each end of the cable-management bracket and remove the bracket from the line card.

For single-port line card cable-management brackets, loosen the captive installation screw on the cable-management bracket and remove the bracket from the line card.

Figure 3-6 Multiport Line Card Cable-Management Installation and Removal (4-Port OC-48c/STM-16c DPT Line Card Shown)

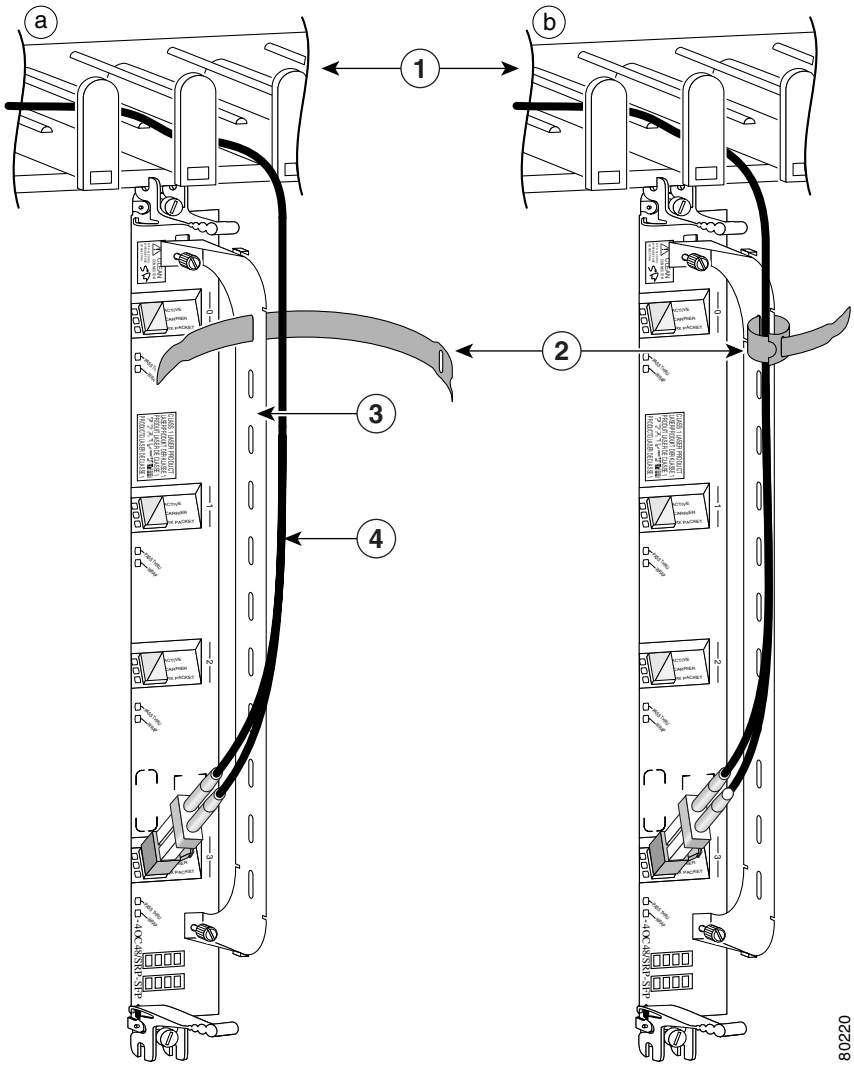

1	Chassis cable-management tray	**3**	Line card cable-management bracket
2	Velcro straps	**4**	Fiber cable

Figure 3-7 Single-Port Line Card Cable-Management Bracket Installation and Removal (1-Port OC-192c/STM-64c DPT Line Card Shown)

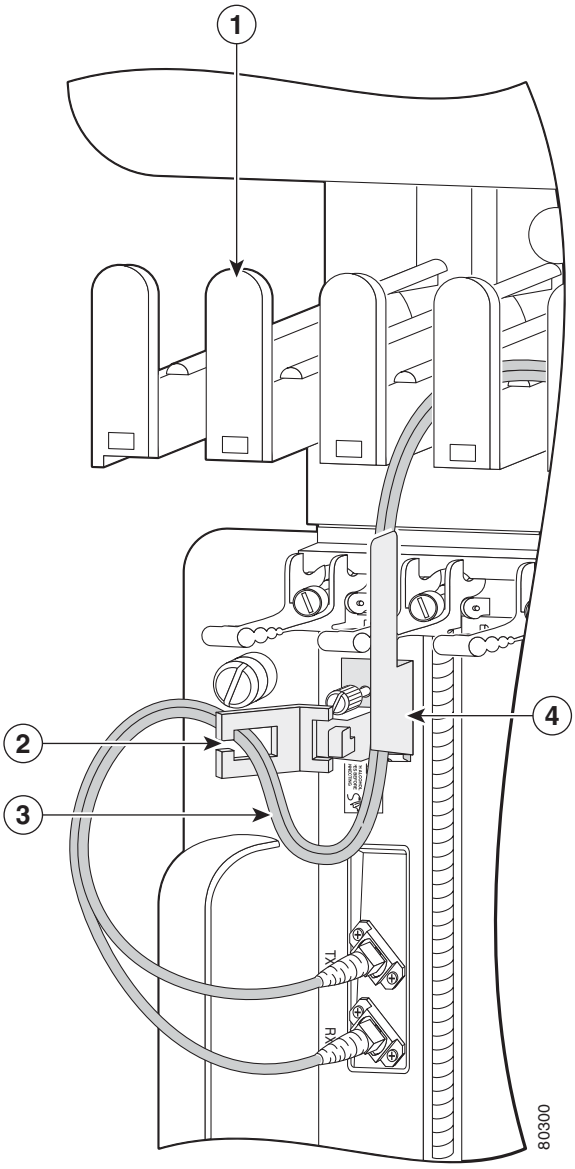

1	Chassis cable-management tray	**3**	Interface cable
2	Cable clip	**4**	Line card cable-management bracket

Installing a Line Card Cable-Management Bracket

To install a line card cable-management bracket, follow these steps:

Step 1 Attach an ESD-preventive wrist or ankle strap and follow its instructions for use.

Step 2 Attach the line card cable-management bracket to the line card as follows:

a. Position the cable-management bracket over the front of the line card faceplate.

b. Insert and tighten the captive screw to secure the bracket to the line card.

c. Starting with the bottom port on the line card, connect each interface cable to the intended port.

Step 3 For multiport line card cable-management brackets, carefully wrap the cables with the supplied Velcro strap. (See Figure 3-6.)

For single-port line card cable-management brackets, carefully press the interface cable onto the cable clip. (See Figure 3-7.) Avoid any kinks or sharp bends in the cable.

For information on disconnecting and connecting interface cables, see the "Fiber-Optic Cables" section on page 3-12.

Cabling and Specifications

The following sections provide specifications for the channelized line card:

Power Budget and Signal Specifications

The SONET specification for fiber-optic transmission defines two types of fiber: single-mode and multimode. Signals can travel farther through single-mode fiber than through multimode fiber.

The maximum distance for installations is determined by the amount of light loss in the fiber path. If your environment requires the signal to travel close to the typical maximum distance, you should use an optical time domain reflectometer (OTDR) to measure the power loss.

The following section describes the power budget and signal specifications for the optics used in the 4-Port Channelized OC-12 Line Cards:

4-Port Channelized OC-12/STM-4 ISE Line Card Power Specifications

The 4-Port Channelized OC-12 Line Card is available only in a single-mode, intermediate-reach configuration, providing a full-duplex 622.08-Mbps, 1310-nm laser-based SONET-compliant interface. Table 3-1 lists the power budget and signal specifications of the 4-Port Channelized OC-12 Line Card.

Table 3-1 4-Port Channelized OC-12 Line Card Power Specifications

Transceiver	Power Budget	Transmit Power	Receive Power	Typical Maximum Distance
Single-mode, short-reach, 1310 nm	8 dB	–15 to –8 dBm	–28 to –7 dBm	1.2 miles (2 km)

Fiber-Optic Cables

Channelized line cards with optic ports use fiber-optic cables. Use a single-mode, optical-fiber interface cable to connect a line card with an optical port in your Cisco XR 12000 Series Router to another line card or add/drop multiplexer (ADM).

Note Fiber cables are not available from Cisco Systems. They can be purchased from cable vendors. If the plug is supplied with a dust cover, remove it before trying to connect it to the line card port.

The subscriber connector (SC) cable connectors are used with channelized line cards with optic ports (Figure 3-8).

Figure 3-8 Simplex SC Cable Connector (Single-mode)

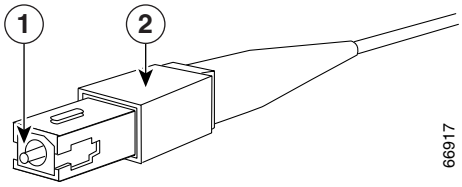

1	SC cable connector	**2**	Spring-action disconnect latch

To remove an interface cable, follow these steps:

Step 1 Attach an ESD-preventive wrist strap to your wrist and follow its instructions for use.

Step 2 Press on the spring-action disconnect latch to disconnect the cable from the interface ports. (See Figure 3-8.)

Step 3 Slowly pull the connector from the port.

Warning **Invisible laser radiation can be emitted from the aperture of the port when no cable is connected. Avoid exposure to laser radiation and do not stare into open apertures.**

Step 4 Insert a dust plug into the optical port opening of each interface that is not being used.

To install an interface cable, follow these steps:

Step 1 Attach an ESD-preventive wrist strap to your wrist and follow its instructions for use.

Step 2 Remove the connector dust cover, if present.

Step 3 Align the connector end of the cable to the appropriate port. Observe the receive (RX) and transmit (TX) cable relationship, as shown in Figure 3-9.

Figure 3-9 Attaching Fiber Cables

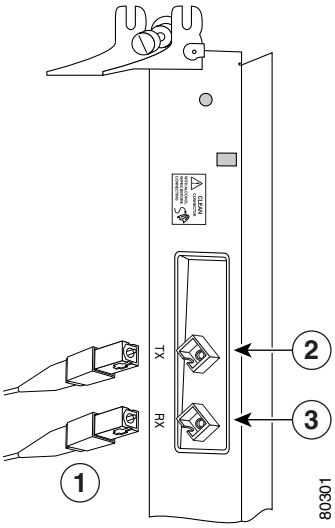

1	Simplex fiber cables
2	TX port
3	RX port

Step 4 Insert the connector until it clicks and locks into place.

Step 5 Attach the other end of the cable to another node. The TX port on the line card must be connected to the RX port on the next node, and the RX port on the line card must be connected to the TX port on the next node. The labels next to the fiber connectors identify TX and RX.

Note The fiber-optic connectors must be free of dust, oil, or other contaminants. Carefully clean the fiber-optic connectors using an alcohol wipe or other suitable cleanser.

CHAPTER 4

Verifying and Troubleshooting the Line Card Installation

Revised: March 2009, OL-17434-01

Overview

This chapter provides various methods by which you can troubleshoot the line card installation. The troubleshooting tips are helpful for identifying the problem and resolving it. The following sections describe how to verify and troubleshoot the line card installation:

Initial Boot Process

Note Many new line cards are designated as administratively down by default. Status LEDs are off until you configure the interfaces and use the **no shutdown** command.

During a typical line card boot process, the following events occur:

1. The line card maintenance bus (Mbus) module receives power and begins executing the Mbus software.
2. The line card Mbus module determines the type of card on which it resides, performs internal checks, and prepares to accept the Cisco IOS XR software from the route processor (RP).
3. The RP powers up the line card and loads the line card with the Cisco IOS XR software.

To verify that the line card is working properly, perform the following operational checks:

- During the line card boot process, observe the line card alphanumeric LEDs to ensure that the card is running the typical initialization sequence. The sequence should end with the alphanumeric status message ‘IOX RUN’.

- Observe the line card status LEDs to verify that the Active LED (Link LED or status LED for line cards with no Active LED) is on. If an Active LED is not on, verify that the associated interface is not shut down.

If one of these conditions is not met, refer to the "Advanced Line Card Troubleshooting" section on page 4-6 to identify any possible problems.

Status LEDs

After installing the line card and connecting the interface cables, verify that the line card is working properly by checking the following LEDs on the faceplate:

- Interface status LEDs show the status of each fiber-optic connector. Channelized line cards with optical interfaces can contain some or all of the following status LEDs (see Figure 1-1):
  - Active—Indicates the active condition of this port
  - Carrier—Indicates the status of SONET framing reception on this port
  - RX PKT—Indicates that data is being received on this port

  Line cards with T3 ports contain a single status LED:
- Alphanumeric LEDs. Two four-digit alphanumeric LEDs display messages that explain the state of the line card. (See the "Alphanumeric LEDs" section on page 1-6.)

The status LEDs might not be on until you have configured the line card interfaces (or turned them on, if they were shut down). To verify correct operation of each interface, complete the configuration procedures for the line card. (See the "Configuring and Troubleshooting Line Card Interfaces" section on page 4-4.)

Troubleshooting the Installation

Note Many new line cards are designated as *administratively down* by default. Status LEDs are off until you configure the interfaces and use the **no shutdown** command.

If the Active LED (Link LED or status LED for line cards with no Active LED) or the alphanumeric display LEDs on a line card do not come on, there is either a problem with the line card installation or a hardware failure. To verify that the line card is installed correctly, follow these steps:

Step 1 If the Active LED fails to come on, but the alphanumeric display LEDs on the line card indicate activity, verify that the initialization sequence ends with IOX RUN. If this is the case, verify that the interface is not shut down. If it is not, suspect a circuitry problem with the Active LED and contact a Cisco Technical Support for further assistance.

Step 2 If the Active LED on the line card fails to come on or the alphanumeric display LEDs do not indicate IOX RUN, check the router connections as follows:

a. Verify that the line card board connector is fully seated in the backplane. Loosen the captive installation screws and firmly pivot the ejector levers toward each other until both are perpendicular to the line card faceplate. Tighten the captive installation screws.

b. Verify that all power cords and data cables are firmly connected at both ends.

c. Verify that all memory modules on the card are fully seated and secured to their sockets.

After the line card reinitializes, the Active LED on the line card should come on. If the Active LED comes on, the installation is complete; if the Active LED does not come on, proceed to the next step.

Step 3 If the Active LED still fails to come on, remove the channelized line card and try installing it in another available line card slot.

- If the Active LED comes on when the line card is installed in the new slot, suspect a failed backplane port in the original line card slot.
- If the Active LED and alphanumeric display LEDs still do not come on, halt the installation. Contact a Cisco Technical Support to report the faulty equipment and obtain further instructions.

Step 4 If an error message displays on the console terminal during the line card initialization, see the appropriate reference publication for error message definitions. If you experience other problems that you cannot solve, contact Cisco Technical Support for assistance.

SONET Clocking Issues

This section provides an overview of SONET clocking issues. This line card supports both line and internal clocking functions. Line clocking is derived from the incoming signal from a given port. Internal clocking is derived from the clock that is internal to the line card.

Each port can be configured independently of the other in a line-timed setup, going back as far as the first payload processor. However, on the 4-Port Channelized OC-12 Line Card, the second level of payload processing ties the ports to a common clock source that is timed from only one port. This can result in pointer justifications if the remaining ports are not synchronous. However, with a properly configured router, these pointer justifications can be limited to provide the same performance as a SONET cross-connect device.

Note Pointer justifications do not affect data throughput. All configurations of the 4-Port Channelized OC-12 Line Card provide total data throughput regardless of pointer justifications. Under no circumstances does any data loss occur. All configurations provide 100 percent error-free data flow.

These line cards use Stratum3 (S3) as the internal clock reference. However, if one of the ports is Stratum1 (S1) accurate, it can be used as the local reference for the system clock. In this case, pointer justifications are very limited. If the system clock is timed from an S1 clock source, from a valid SONET network, then there are no pointer justifications on any synchronous interface. There are minimal pointer justifications (limited to S1 pointer justifications) on any asynchronous interface if it is on another SONET network. Pointer justification in this case is proportional to the accuracy of the other port clock.

Note When using the **show controller sonet** *rack/slot/module/port* command, Positive Stuff Event (PSE) and Negative Stuff Event (NSE) values can be safely ignored.

The 4-Port Channelized OC-12 Line Card can select an input port as the source of synchronization for the system clock. This eliminates pointer justifications on any port that is synchronous with the selected port.

Configuring and Troubleshooting Line Card Interfaces

This section provides procedures for configuring and troubleshooting the channelized line cards:

- Configuring the 4-Port Channelized OC-12/STM-4 ISE Line Cards, page 4-4
- Advanced Line Card Troubleshooting, page 4-6

Configuring the 4-Port Channelized OC-12/STM-4 ISE Line Cards

The following example describes how to perform a basic controller configuration. Use the **configure** command to configure the controller.

Use the following procedure to configure the 4-Port Channelized OC-12 Line Card for SONET framing. Press **Enter** after each configuration step unless otherwise noted.

The SONET controller name is #controller sonet 0/2/0/0 if Rack, Slot, CPU instance (0 for LCs) and Port are 0, 2, 0, 0, respectively. A Cisco XR 12000 Series Router, identifies an interface address by *rack/slot/CPU instance/port number*. By default, the 4-Port Channelized OC-12 Line Card is in 12xSTS-1 mode. Table 4-1 shows the configuration on the first 12 STSs.

By default, the controller is in SONET mode.

Table 4-1 Controller Configuration Example

	STS-1	STS-2	STS-3	STS-4	STS-5	STS-6	STS-7	STS-8	STS-9	STS-10	STS-11	STS-12
mode	STS-3c POS			DS3 serial	DS3 serial	DS3 serial	DS3 serial			STS-3c POS		

Examples

This example shows how to create three POS interfaces named 0/2/0/0/1 on rack, slot, CPU instance, and port 0,2,0,0:

```
0/2/0/0:router(config)# config t
0/2/0/0:router(config)# controller sonet 0/2/0/0
0/2/0/0:router (config-sonet)# sts 1
0/2/0/0:router (config-stsPath)# width 3
0/2/0/0:router (config-stsPath)# mode pos unscramble
0/2/0/0:router (config-stsPath)# commit
```

This example shows how to create T3 controller named 0/2/0/0/4 on rack, slot, CPU instance, and port 0,2,0,0:

```
0/2/0/0:router(config)# controller sonet 0/2/0/0
0/2/0/0:router (config-sonet)# sts 1
0/2/0/0:router (config-stsPath)# mode t3
0/2/0/0:router (config-stsPath)# commit
```

This example shows how to create a serial interface on the T3 controller. STS-5 and STS-6 must be configured similarly to STS-4.

```
0/2/0/0:router (config-controller-sts1)# controller t3 0/2/0/0/4
0/2/0/0:router (config-t3)# framing (c-bit | m23)
0/2/0/0:router (config-t3)# mode serial
0/2/0/0:router (config-t3)# commit
```

This example shows how to create POS on STS-12c after the card comes up with the default configuration:

```
0/2/0/0:router(config)# controller sonet 0/2/0/0
0/2/0/0:router (config-sonet)# sts 1
0/2/0/0:router (config-stsPath)# width 12
0/2/0/0:router (config-stsPath)# mode pos scramble
0/2/0/0:router (config-stsPath)# commit
```

Use the following procedure to configure the 4-Port Channelized OC-12 Line Card for SDH framing. Press **Enter** after each configuration step unless otherwise noted.

If the values for the rack, slot, CPU instance (0 for LCs), and port arguments are 0, 2, 0, and 0, respectively, the SONET controller name is #controller sonet 0/2/0/0. By default, the 4-Port Channelized OC-12 Line Card is in 12xSTS-1 mode. Table 4-2 shows the POS configuration of the first 6 STM0s in the OC-12 port number 0 in AU-4 mode.

Table 4-2 Controller Configuration Example

	STM0-1	STM0-2	STM0-3	STM0-4	STM0-5	STM0-6	STM0-7	--------	STM0-12
mode	AU-4 (STM-1) POS			AU-4--> TUG-3-->E3 Serial			--------	--------	----------

Examples

This example shows how to create three POS interfaces named 0/2/0/0/1 on rack, slot, CPU instance, and port 0,2,0,0:

```
0/2/0/0:router(config)# controller sonet 0/2/0/0
0/2/0/0:router(config-controller)# framing sdh
0/2/0/0:router (config-controller)# au 1
0/2/0/0:router (config-controller-auPath)# width 3
0/2/0/0:router (config-controller-auPath)# mode pos scramble
```

This example shows how to create an E3 controller named 0/2/0/0/4/1:

```
0/2/0/0:router(config)# controller sonet 0/2/0/0
0/2/0/0:router(config-sonet)# framing sdh
0/2/0/0:router(config-sonet)# au 4
0/2/0/0:router(config-auPath)# width 3
0/2/0/0:router(config-auPath)# mode tug3
0/2/0/0:router (config-auPath)# tug3 1
0/2/0/0:router (config-tug3Path)# mode e3
0/2/0/0:router (config-tug3Path)# commit
```

This example shows how to create a serial interface on the E3 controller:

```
0/2/0/0:router(config-t)# controller e3 0/2/0/0/4/1
0/2/0/0:router(config-e3)# mode serial
0/2/0/0:router(config-e3)# commit
```

Table 4-3 shows the user configuration of the first 3 STM0s in the OC-12 port number 0 in AU-3 mode.

Table 4-3 Controller Configuration Example

	STM0-1	--------	STM0-12
mode	AU-3 VC3->T3 Serial	--------	----------

Examples

This example shows how to create a controller named 0/2/0/0/1 on rack, slot, CPU instance, and port 0,2,0,0:

```
0/2/0/0:router(config)# controller sonet 0/2/0/0
0/2/0/0:router(config-controller)# au 1
0/2/0/0:router(config-controller-auPath)# width 1
0/2/0/0:router(config-controller-auPath)# mode t3
```

This example shows how to create a serial port on the T3 controller:

```
0/2/0/0:router(config-t)# controller t3 0/2/0/0/1
0/2/0/0:router(config-t3)# mode serial
0/2/0/0:router(config-t3)# commit
```

The default controller configuration parameters for the 4-Port Channelized OC-12 Line Card are listed in Table 4-4.

Table 4-4 4-Port Channelized OC-12 Line Card Controller Parameters and Default Configuration Values

Parameter[1]	Configuration Command	Default Value
Framing	[**no**] **framing** [**sonet**]	sonet
Clock Source	[**no**] **clock source** [**internal** | **line**]	line
Loopback	[**no**] **loopback** [**internal** | **line**]	no loopback
SONET overhead	[**no**] **overhead** [**j0** *value*] [**s1s0** *value*]	j0 set to 1; s1s0 set to 0x00
Thresholds	[**no**] **ber-threshold b1-tca** [*3..9*] [**no**] **ber-threshold b2-tca** [*3..9*] [**no**] **ber-threshold sd-ber** [*3..9*] [**no**] **ber-threshold sf-ber** [*3..9*]	6(10e-6) 6(10e-6) 6(10e-6) 3(10e-6)
Alarm Reporting	[**no**] **alarm-report** [***b1-tca*** | ***b2-tca*** | ***lais*** | ***lrdi*** | ***sd-ber*** | ***sf-ber*** | ***slof*** | ***slos***]	b1-tca, b2-tca, sf-ber, slos, slof
Shutdown	[**no**] **shutdown**	no shutdown

1. Scrambling is always enabled and is not configurable.

Advanced Line Card Troubleshooting

This section provides advanced troubleshooting information in case of a line card failure. It also provides pointers for identifying whether or not the failure is hardware related. This section does not include any software-related failures, except for those that are often mistaken for hardware failures.

Note This section assumes that you possess basic proficiency in using Cisco IOS XR software commands.

The first step is to identify the cause of the line card failure or console errors. To discover which card may be at fault, it is essential to collect the output from the following commands:

- **show logging**
- **show diag**

Along with these **show** commands, you should also gather the logs and additional data for troubleshooting line card installation:

- Console Logs and Syslog Information—This information is crucial if multiple symptoms are occurring. If the router is configured to send logs to a Syslog server, you may see some information on what has occurred. For console logs, it is best to be directly connected to the router on the console port with logging enabled.
- Additional Data—The **show tech-support** command is a compilation of many different commands, including **show version**, and **show running-config**. This information is required when working on issues with Cisco Technical Support personnel.

Note It is important to collect the **show tech-support** data before doing a reload or power cycle. Failure to do so can cause all information about the problem to be lost.

Note Output from these commands varies slightly, depending on which line card you are using, but the basic information is the same.

Output Examples

The following is sample output that you may see if your Cisco XR 12000 Series Router line card fails:

- show platform Output
- show logging Output
- show diag Output
- show context Output

show platform Output

The following command provides status details, information, and location of all nodes installed on the router:

```
RP/0/9/CPU0:UUT# show platform

Node              Type              PLIM              State           Config State
-------------------------------------------------------------------------------
0/6/CPU0          L3LC Eng 3        OC12-CH           IOS XR RUN      PWR,NSHUT,MON
0/9/CPU0          PRP(Active)       N/A               IOS XR RUN      PWR,NSHUT,MON
```

show logging Output

The following command provides the contents of logging buffers:

```
RP/0/9/CPU0:UUT# show logging

Syslog logging: enabled (20 messages dropped, 0 flushes, 0 overruns)
    Console logging: level informational, 79 messages logged
    Monitor logging: level error, 0 messages logged
    Trap logging: level informational, 0 messages logged
    Buffer logging: level debugging, 99 messages logged
Log Buffer (16384 bytes):

RP/0/9/CPU0:Oct  7 12:56:39.036 : mbi-hello[61]: %PLATFORM-MBI_HELLO-7-INFO_CREATE_SUCCESS
: MBI-Hello: Successful creation of /dev/mbi_lwm. Attempt number 1
```

```
RP/0/9/CPU0:Oct  7 12:56:39.141 : init[65541]: %OS-INIT-7-MBI_STARTED : total time 4.936
seconds
RP/0/9/CPU0:Oct  7 12:56:39.474 : nvram[68]: %MEDIA-NVRAM-6-UPGRADING : nvram upgrade:
upgrading successful
RP/0/9/CPU0:Oct  7 12:56:39.478 : nvram[68]: %MEDIA-NVRAM-6-UPGRADING : nvram upgrade:
backup all files under nvram:/ if downgrade to 3.5 or under
RP/0/9/CPU0:Oct  7 12:56:39.947 : nvram[68]: %MEDIA-NVRAM-4-BADFILES : NVRAM File
Corrupted (sam_db). Some of them May be Lost
RP/0/9/CPU0:Oct  7 12:56:54.441 : sysmgr[87]: %OS-SYSMGR-5-NOTICE : Card is COLD started
RP/0/9/CPU0:Oct  7 12:56:54.749 : init[65541]: %OS-INIT-7-INSTALL_READY : total time
20.546 seconds
RP/0/9/CPU0:Oct  7 12:56:55.098 : dsc[166]: Memory Sanity Check Enabled
RP/0/9/CPU0:Oct  7 12:56:55.836 : wdsysmon[377]: %OS-RSVDPMEM-3-NO_MATCHING_STRING :
Failed to find any line in /etc/platform_reserved_physmem containing string: pcds
RP/0/9/CPU0:Oct  7 12:57:07.471 : sysmgr[87]: %OS-SYSMGR-7-DEBUG : node set to DSC
(remainder of output omitted)
```

show diag Output

The following command provides hardware and software details about each node on the router:

```
RP/0/0/CPU0:UUT# show diag

SLOT  6 (RP/LC 6): 4 port ISE OC12 channelized STS-12c/STM-4, STS-3c/STM-1 or DS3/E3
Single Mode/SR SC-SC connector
  MAIN: type 71,  800-18816-10 rev F0 dev 0
        HW config: 0x01    SW key: 00-00-00
  PCA:  73-7397-14 rev D0 ver 7
        HW version 1.0  S/N SAL11488HVH
  MBUS: Embedded Agent
        Test hist: 0x00    RMA#: 00-00-00    RMA hist: 0x00
  DIAG: Test count: 0x00000000    Test results: 0x00000000
  FRU:  Linecard/Module: CHOC12/DS3-SR-SC
        Route Memory: MEM-LC-512=
        Packet Memory: MEM-LC1-PKT-512=
  L3 Engine: 3 - ISE OC12 (2.5 Gbps)
  MBUS Agent Software version 2.56 (RAM) (ROM version is 3.7)
  Using CAN Bus A
  ROM Monitor version 1.13
  Fabric Downloader version used 7.3 (ROM version is 7.1)
  Primary clock is CSC1
  Board State is IOS-XR RUN
  Insertion time: Sun Oct  7 12:59:25 2001 (00:27:31 ago)
  DRAM size: 536870912 bytes
  FrFab SDRAM size: 268435456 bytes
  ToFab SDRAM size: 268435456 bytes
  0 crashes since restart/fault forgive

SLOT  9 (RP/LC 9): Cisco 12000 Series Performance Route Processor 2
  MAIN: type 96,  800-27058-01 rev :6 dev 0
        HW config: 0x10    SW key: 00-00-00
  PCA:  73-10242-04 rev 75 ver 4
        HW version 0.0  S/N SAD1023065X
  MBUS: Embedded Agent
        Test hist: 0x00    RMA#: 00-00-00    RMA hist: 0x00
  DIAG: Test count: 0x00000000    Test results: 0x00000000
  FRU:  Linecard/Module: PRP-2
        Route Memory: MEM-PRP/LC-1024=
  MBUS Agent Software version 2.56 (RAM) (ROM version is 3.7)
  Using CAN Bus A
  ROM Monitor version 1.17dev(0.5)
  Primary clock is CSC1
  Board State is IOS-XR RUN
```

```
  Insertion time: Sun Oct  7 12:57:46 2001 (00:29:11 ago)
  DRAM size: 1073741824 bytes
```

show context Output

The following command provides context information about all recent crashes:

```
RP/0/0/CPU0:UUT# show context

node:      node0_6_CPU0
-----------------------------------------------------------------

node:      node0_9_CPU0
-----------------------------------------------------------------
```

Checking the Current Status of the Line Card

Once you have determined if the problems are caused by system errors in the log or by an actual crash, it is important to check the current status of the line card to see if it has recovered from the failure. The status of individual line cards can be identified either by examining the alphanumeric LEDs located on the front of the line card or by issuing the **show led** command.

show led Output

```
RP/0/0/CPU0:UUT# show led

LOCATION        MESSAGE        MODE      STATUS
=====================================================
0/6/CPU0       IOX RUN       DEFAULT   UNLOCKED
0/9/CPU0       ACTVRP        DEFAULT   UNLOCKED
```

Note It is possible for the value of an alphanumeric LED to be reversed. For example, IOX RUN may be displayed as RUN IOX.

If the alphanumeric LEDs on the line card display anything other than IOX RUN, or the RP is neither the active route processor nor the secondary route processor, there is a problem and the line card has not fully loaded correctly. Before replacing the line card, try fixing the problem by following these steps:

Step 1 Reload the line card using **hw-module location 0/0/CPU0 reload** command from the EXEC mode.

Step 2 Reload the line card using the **reload location** command. This causes the line card to reset and download the Mbus and fabric downloader software modules before attempting to download the Cisco IOS XR software.

or

Step 3 Reset the line card manually. This may rule out any problems that are caused by a bad connection to the Mbus or switching fabric.

Fabric Ping Failure

Fabric ping failures occur when either a line card or the secondary RP fails to respond to a fabric ping request from the primary RP over the switch fabric. Such failures are symptoms that should be investigated. They are indicated by the following error messages:

```
%GRP-3-FABRIC_UNI: Unicast send timed out (1)
%GRP-3-COREDUMP: Core dump incident on slot 1, error: Fabric ping failure
%LCINFO-3-CRASH: Line card in slot 1 crashed
```

You can find more information about this issue on Cisco.com in the *Troubleshooting Fabric Ping Timeouts and Failures on the Cisco 12000 Series Internet Router* publication.

Error Messages

If you receive any error message related to a line card, you can use the Error Message Decoder Tool (on Cisco.com) to find the meaning of this error message. Some errors point to a hardware issue, while others indicate a Cisco IOS XR software caveat or a hardware issue on another part of the router. This publication does not cover all these messages.

Note Some messages related to Cisco Express Forwarding (CEF) and Inter Process-Communication (IPC) are explained on Cisco.com in the *Troubleshooting CEF-Related Error Messages* publication.

Line Card Alarm and Event Detection

This section assumes that you are familiar with SONET/SDH alarm and signal events for SONET line cards and DS3/E3 alarms and line states for DS3/E3 line cards. Your line card does not have an LED for alarm and event detection, but you can enter the **show controllers** EXEC command to verify whether the alarm and event detection messages are active or inactive. Most alarm and event detection messages are short-lived, because if problems occur, the line card clears the error condition, but records the event to verify line card operation status.

To display SONET alarms, use the **show controllers sonet** command; to display DS3 or E3 alarms, use the **show controllers t3** command.

The output from the **show controllers t3** *rack/slot/instance/port* command in EXEC mode sends messages about the following types of alarms and events:

- AIS (Alarm Indication Signal)
- LOF (Loss of Frame)
- LOS (Loss of Signal)
- OOF (Out of Frame)
- RAI (Remote Alarm Indication)

The output also indicates whether the alarm or event originates from the local end connector or the remote end connector.

Some of the alarm and signal events for the SONET line cards are enabled for reporting by default. Others can be enabled individually. What the **show controllers sonet** command in EXEC (or administration EXEC) mode displays depends on the configuration of the SONET port.

The following partial output example from the **show controllers sonet** command in EXEC (or administration EXEC) mode shows alarm and event information for the second SONET controller in rack 0, slot 3, instance 0, and port 1 of a Cisco XR 12000 Series Router (4-Port Channelized OC-12/STM-4 ISE Line Card):

```
router# show controllers sonet 0/3/0/1

SONET3/1
 Current state of the controller is up
 Framing is SONET
 Clock source is INTERNAL, Loopback is NONE

SECTION
  LOF = 0          LOS    = 0                            BIP(B1) = 0
LINE
  AIS = 0          RDI    = 0          FEBE = 147        BIP(B2) = 0

Active Defects:None
Active Alarms: None
Alarm reporting enabled for:SF SLOS SLOF B1-TCA B2-TCA B3-TCA

APS
  COAPS = 0          PSBF = 0
  State:PSBF_state = False
  ais_shut = FALSE
  Rx(K1/K2):00/00
BER thresholds: SF = 10e-3  SD = 10e-6
TCA thresholds: B1 = 10e-6  B2 = 10e-6

Optical Power Monitoring
Laser Bias = 33.6 mA
Receiver Power = -5.80 dBm (+/- 2 dBm)
```

Line Card Memory

Caution The user serviceability of memory modules varies from line card to line card. Read this section carefully before attempting to remove or install any line card memory module.

The channelized line cards include the following types of memory:

- Route memory
- Packet memory
- Pointer look-up (PLU) memory (not user serviceable)
- Table look-up (TLU) memory (not user serviceable)

Line card memory configurations and memory socket locations differ, depending on the line card engine type. Table 4-5 lists the channelized and electrical interface line card engine types.

Table 4-5 Channelized Line Card and Engine Type

Channelized Interface Line Card	Line Card Engine Type
4-Port Channelized OC-12/STM-4 ISE	Internet Services Engine (ISE)

Line Card Memory Locations

The following sections contain general line card memory information for each channelized and electrical interface line card:

- ISE Line Card Memory Locations, page 4-12
- Line Card Memory Options, page 4-13

Memory removal and installation instructions are found in the "Removing and Installing Line Card Memory" section on page 4-13.

ISE Line Card Memory Locations

Figure 4-1 shows the small outline DIMM (SODIMM) socket locations on an ISE line card. This line card is equipped with 10 SODIMM sockets:

- Two route memory SODIMM sockets
- Four packet memory sockets (not user serviceable)
- Four TLU/PLU memory sockets (not user serviceable)

Figure 4-1 ISE Line Card Memory Locations

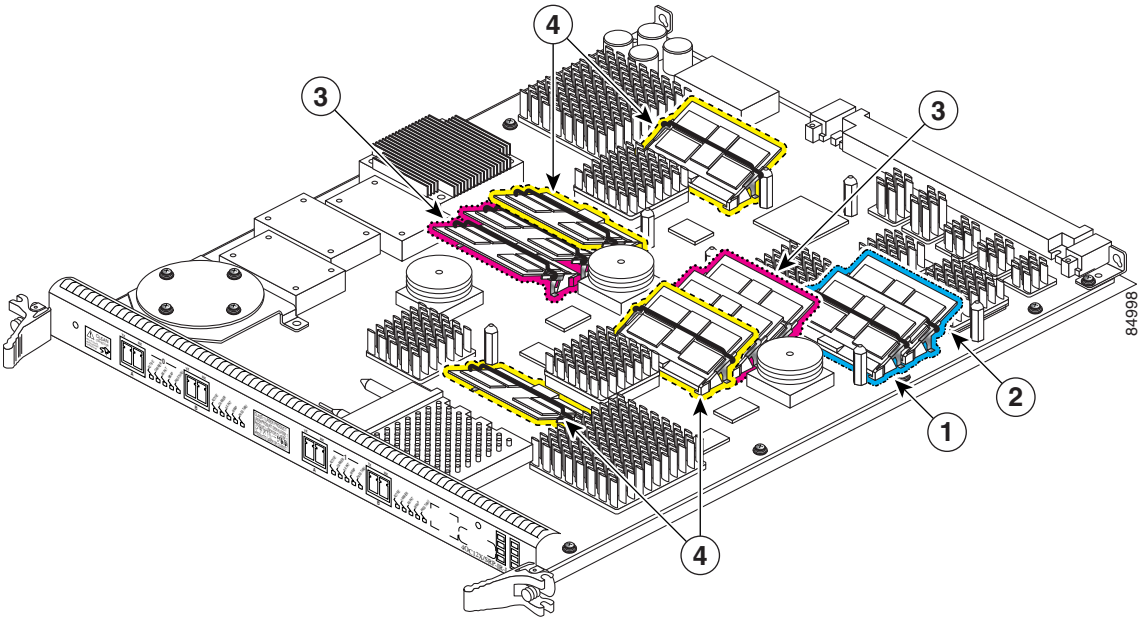

1	Route memory SODIMM0	**3**	Four packet memory SODIMM sockets (not field serviceable)
2	Route memory SODIMM1	**4**	Four TLU/PLU memory SODIMM sockets (not field serviceable)

There are two route memory sockets on ISE (Engine 3) line cards that support the addition of route memory modules. Table 4-6 describes the various memory upgrade options.

Table 4-6 ISE/Engine 3 Line Card Memory Upgrade Options

Line Cards	Current Configuration	Memory Upgrade[1]
4-Port Channelized OC-12/STM-16	• Two 128-MB memory modules	• Upgrade to 512-MB by installing two 256-MB memory modules.[2] • Upgrade to 512-MB by installing one 512-MB memory module.[3]
	• Two 256-MB memory modules • One 512-MB memory module	• Upgrade to 1-GB by installing two 512-MB memory modules.[2] • Upgrade to 1-GB by installing a second 512-MB memory module.[2 3]

1. If you need to upgrade beyond 2 x 512 MB modules, you must contact the Cisco Technical Support Personnel for instructions.
2. Do not mix memory sizes. Both DIMMs must be the same size memory.
3. Requires Cisco IOS XR Release 3.2 or a later release, and you must upgrade the route processor ROMMON code to Version 1.13 or later *before* installing the upgraded memory.

Line Card Memory Options

Table 4-7 lists the available route memory options for 4-Port Channelized OC-12 Line Card. The 4-Port Channelized OC-12 Line Card is available with 512-MB route memory (MEM-LC-ISE-512) at no cost.

Table 4-7 ISE Channelized Line Card Route Memory

Total Route Memory	DIMM Module	Cisco Product Number	SODIMM Sockets
1 GB	MEM-LC-ISE-1G[1]	2 512-MB SODIMM	DIMM0 and DIMM1

1. This order number is used whether you are replacing or upgrading the route memory. The default memory on ISE line cards is 512 MB. This is provided either as two 256-MB SODIMMs or as one 512-MB SODIMM.

Removing and Installing Line Card Memory

Before beginning the memory replacement procedures in this section, ensure that you have the proper tools and equipment at hand, and that you are using appropriate ESD-prevention equipment and techniques. This section contains the following procedures:

- Removing a SODIMM, page 4-13
- Installing a SODIMM, page 4-16
- Checking the Installation of Line Card Memory, page 4-19

Refer to Figure 4-1 for the location of the memory on your line card.

Removing a SODIMM

To remove a SODIMM, follow these steps:

Step 1 Attach an ESD-preventive wrist or ankle strap and follow its instructions for use.

Step 2 Place the line card on an antistatic mat so that the faceplate is nearest to you.

Step 3 Locate the route memory socket on the line card.

Step 4 If present, remove the SODIMM retaining clip from the memory module socket. Grasp the latch arm intersection located on each side of the clip and gently slide the clip out. (See Figure 4-2.) Save the retaining clip.

Note Some line cards do not require a retaining clip.

Caution If the retaining clip is bent or damaged, do not attempt to fix or reuse it. This can cause serious damage to the line card. Each SODIMM replacement ships with a spare retaining clip, in case there is any damage to the existing clip.

Figure 4-2 Remove Retaining Clip from Memory Module Socket

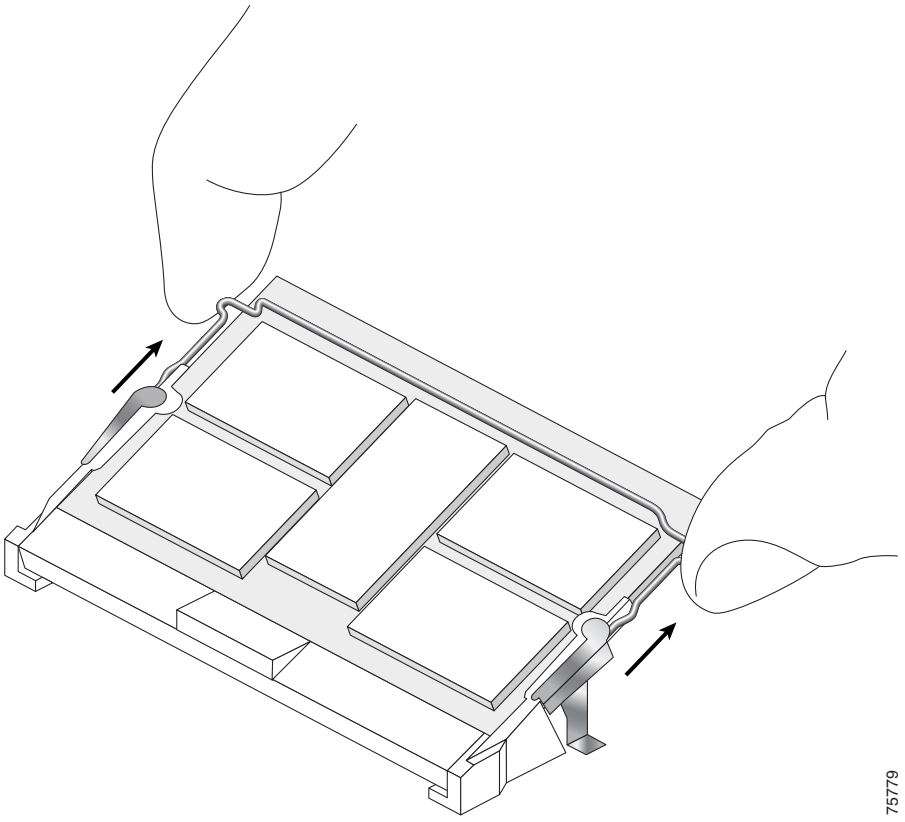

Step 5 Remove the SODIMM by gently moving the plastic latches in an outward direction, parallel to and away from the memory module, until it releases and rotates to a 45-degree angle. (See Figure 4-3 and Figure 4-4a.)

Caution The plastic latch on the SODIMM socket is enclosed by the metal strain-relief latch. The plastic latch should *never* be moved past the metal strain-relief latch.

Caution Handle the edges of the SODIMM only. Do not touch the integrated circuit devices on the SODIMM; the metal traces, or fingers, along the edge of the SODIMM; or the pins in the SODIMM socket.

Figure 4-3 Moving the Plastic Latch Away from the SODIMM

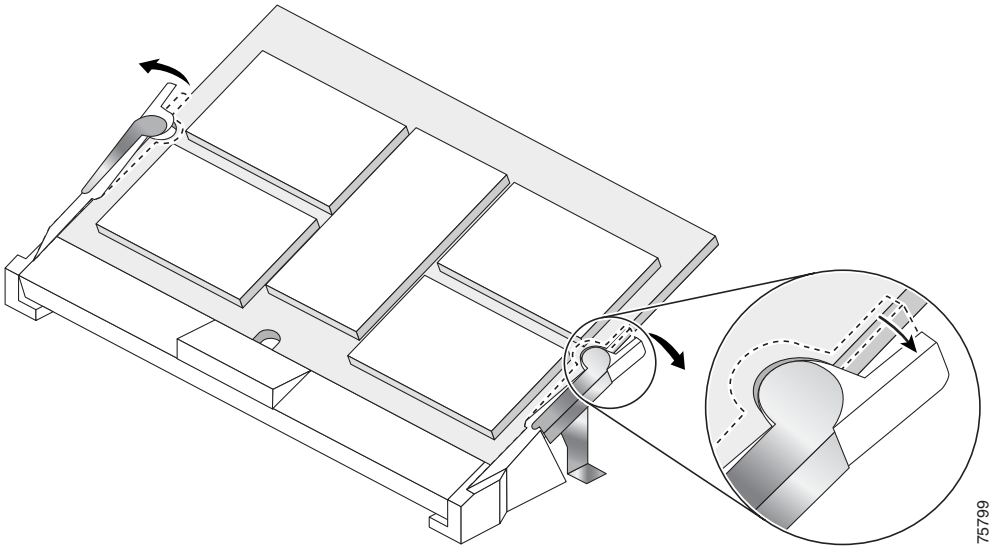

Step 6 As the SODIMM is released, it positions itself at a 45-degree angle. Gently pull the SODIMM module out of the socket. Continue to keep the module at a 45-degree angle until it is completely removed from the socket guides. (See Figure 4-4b.)

Figure 4-4 Removing a 144-pin SODIMM Module

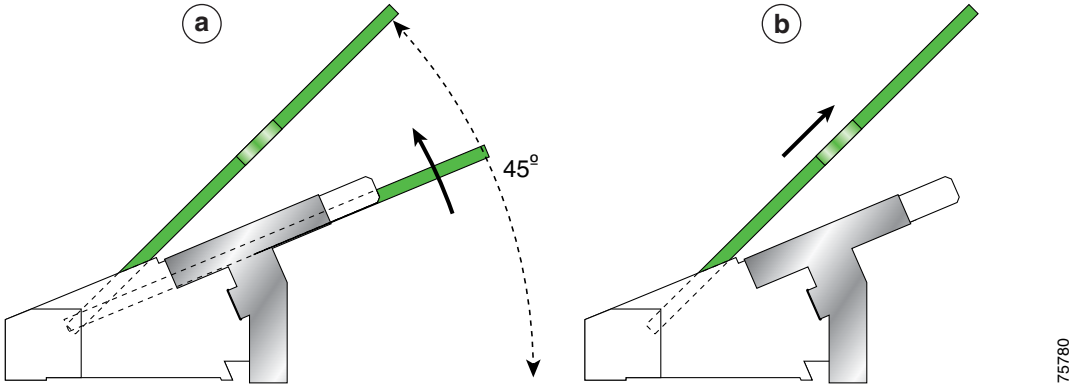

Step 7 Immediately place the SODIMM in an antistatic bag to protect it from ESD damage.

Installing a SODIMM

To install a SODIMM module, follow these steps:

Step 1 Attach an ESD-preventive wrist or ankle strap and follow its instructions for use.

Step 2 Place the line card on an antistatic mat so that the faceplate is nearest to you.

Step 3 If there is a retaining clip, check to make sure that it has not been damaged or bent. (See Figure 4-5.)

Note Some line cards do not require a retaining clip.

Figure 4-5 SODIMM Socket Retaining Clip

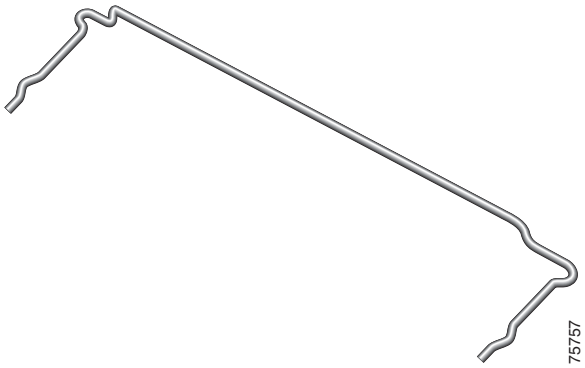

Caution If the retaining clip is damaged, do not use it. This can damage the SODIMM socket.

Step 4 Locate the route memory socket on the line card.

Step 5 Remove the new SODIMM from its protective antistatic bag.

Caution Grasp the edges of the SODIMM only. Do not touch the integrated circuit devices on the SODIMM; the metal traces, or fingers, along the edge of the SODIMM; or the pins in the SODIMM socket.

Step 6 Line up the SODIMM key with the key in the board socket. (See Figure 4-6.)

Figure 4-6 SODIMM with Key in Face-up Position

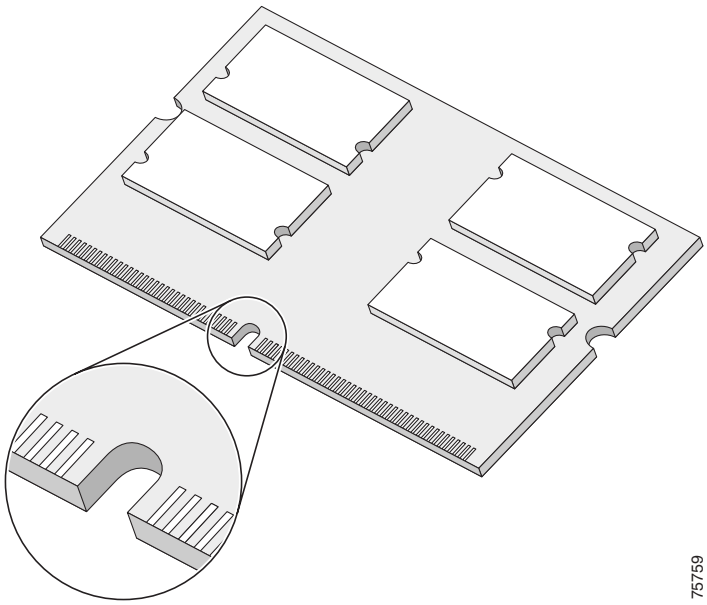

Step 7 The SODIMM must be lined up at a 45-degree angle. (See Figure 4-7a.)

Note When the key is in the face-up position, the metal traces on the left side of the key measure 0.9 inch (23.20 mm). The metal traces on the right side of the key measure 1.29 inches (32.80 mm). The SODIMM can not be inserted until the keys are lined up properly.

Step 8 Place both thumbs at the end of the socket and use your index fingers to guide the module into the socket until it is fully seated.

Be sure that your index fingers are located on the outer corners of the SODIMM to maintain even pressure when the module is being seated in the socket.

Figure 4-7 Inserting a 144-pin SODIMM Module

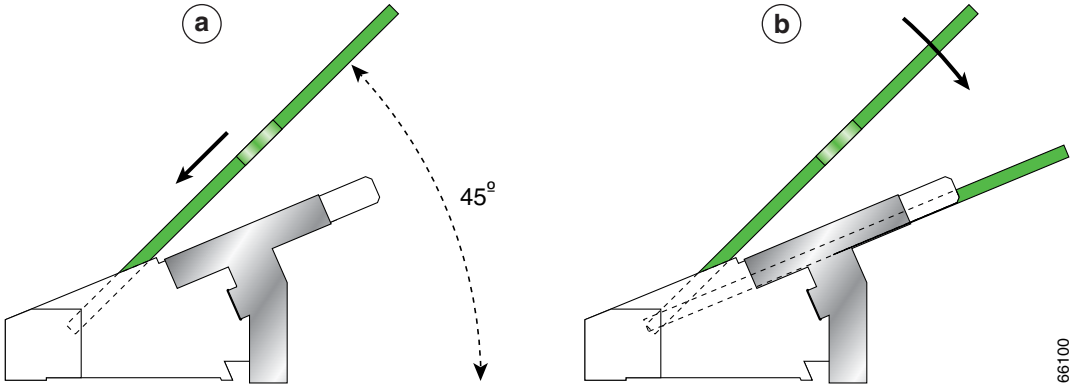

Step 9 Gently press the SODIMM down using your index fingers, distributing even pressure across the module until it locks into the tabs. (See Figure 4-7b.)

Caution Excessive pressure can damage a SODIMM socket.

Step 10 Verify that the release levers are flush against the side of the socket. If they are not, the SODIMM might not be seated properly.

Step 11 If the module appears misaligned, carefully remove it and reseat it, ensuring that the release lever is flush against the side of the SODIMM socket.

Step 12 If there is a retaining clip, insert it by sliding the clip between the metal strain relief and the plastic latch. (See Figure 4-8.)

Figure 4-8 Inserting the Retaining Clip

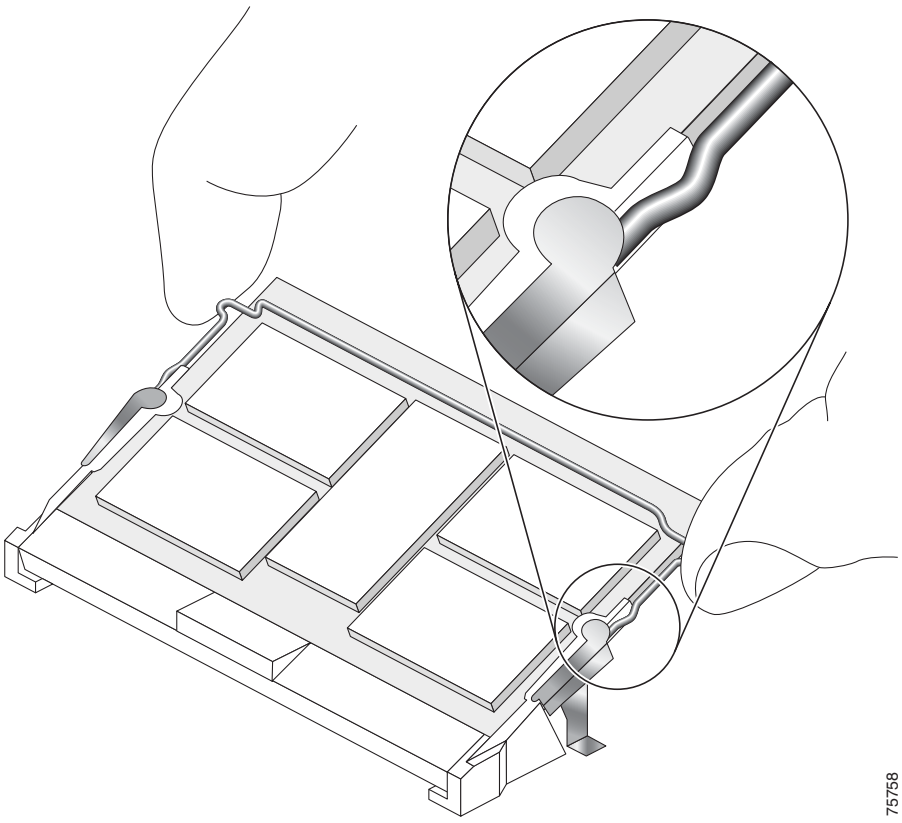

The clip is properly installed when the clip detente protrudes below the strain relief and plastic latch. (See Figure 4-9.)

Figure 4-9 Retaining Clip Completely Installed into Module Latch

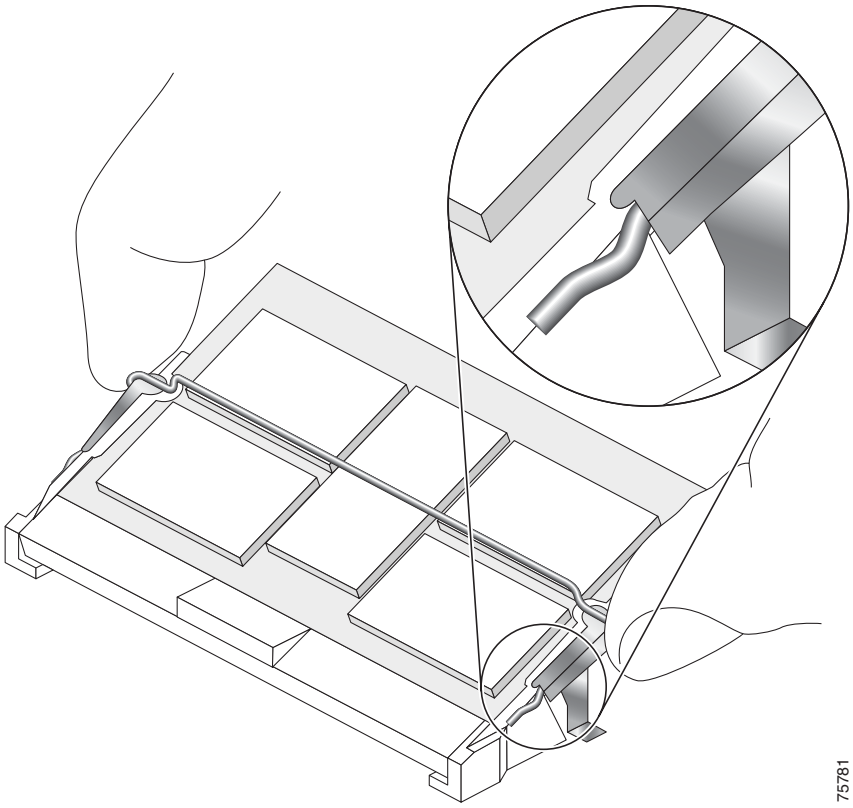

Checking the Installation of Line Card Memory

After you install line card memory and reinstall the line card in the router, the router reinitializes the line card and detects the memory change as part of the reinitialization cycle. The time required for the router to initialize can vary with different router configurations and memory configurations. A router with larger SODIMMs, for example, might take longer to boot.

If the line card does not reinitialize properly after you upgrade the SODIMMs on the line card, or if the console terminal displays a checksum or memory error, verify that you installed the correct SODIMM module and that it is installed correctly on the line card.

To check the installation of line card memory, follow these steps:

Step 1 Remove the line card from the card cage as described in the "Removing a Line Card" section on page 3-3.

Step 2 Check the alignment of the SODIMM looking at it across the horizontal plane of the card. The SODIMM module should be aligned at the same angle as shown in Figure 4-7 and be fully inserted into its socket.

If a SODIMM is not correctly aligned, remove it and reinsert it.

Step 3 Reinstall the line card in the card cage as described earlier in this publication and perform another installation check.

If the card fails to restart properly after several attempts and you are unable to resolve the problem, access Cisco.com or contact your Cisco Technical Support representative for assistance. Before calling, make note of any console error messages, unusual LED states, or other router indications or behaviors that might help to resolve the problem.

Physical Layer Features

The following section provides details of 4-Port Channelized OC-12 Line Card physical layer features:

Types of Line Card Supported

Line cards are available in following types:

- 4-Port Channelized OC-12 Line Card
- 4-Port Channelized OC-12/STM-4 ISE
- 16-Port Channelized OC3 Line Card

Only the 4-Port Channelized OC-12 Line Card is supported on the Cisco XR 12000 Series Router running on Cisco IOS XR Software Release 3.8.0.

Note The 4-Port Channelized OC-12 Line Card must have a Gulf application-specific integrated circuit (ASIC) version later than or equal (>=) to 4 on Cisco IOS XR software. Gulf ASIC versions earlier than (<) 4 would be rejected on Cisco IOS XR software.

Supported and Unsupported Channelization Modes

The 4-Port Channelized OC-12 Line Card supports both the SONET and SDH mode of operation. The following section describes the topics listed:

- Supported Channelization Modes
- Unsupported Channelization Modes
- SONET Path Concatenation Restrictions

Supported Channelization Modes

The 4-Port Channelized OC-12 Line Card supports the following SONET channelization modes in the current release of Cisco IOS XR Software Release 3.8.0:

- STS-12c
- STS-3c
- STS-1, DS3
- All valid combinations of these modes are supported.

The 4-Port Channelized OC-12 Line Card supports the following SDH channelization modes in the current release of Cisco IOS XR Software Release 3.8.0:

- AU-4-4c (VC-4-4c)
- AU-4 (VC-4)
- AU-4->TUG-3->VC-3->DS3
- AU-4->TUG-3->VC-3->E3
- AU-3->VC-3->DS3
- All valid combinations of these modes are supported.

Unsupported Channelization Modes

The 4-Port Channelized OC-12 Line Card does not support the following combination of channelization modes in the current release of Cisco IOS XR Software Release 3.8.0:

- STS-1 > E3
- AU-3 > VC-3 > E3

SONET Path Concatenation Restrictions

Concatenation of Synchronous Transport Signal (STS) paths is supported only at GR-253 specified boundaries along with the restriction that nonstandard widths are not supported. Only contiguous STS paths can be concatenated. This limits the concatenation support to following STS paths, with numbers in bracket identifying the first STS number for a given STS path:

- STS-1 (1, 2, 3, …)
- STS-3c (1, 4, 7, 10, …)
- STS-12c (1, 13, 25, 37)

SONET Loopback

The following types of loopback are supported at the SONET line level:

- Local Line Loopback
- Network Line Loopback

SONET paths cannot be individually configured for loopback.

Encapsulation Method Support

The following encapsulation methods are supported by 4-Port Channelized OC-12 Line Card on POS and serial interfaces:

- Frame Relay
- High-level Data Link Control (HDLC)
- Point to Point Protocol (PPP)

Support for APS

This feature provides 1+1 mulitrouter automatic protection switching (SR-APS) for the 4-Port Channelized OC-12 Line Card (Engine 3) in the Cisco XR 12000 Series Router. By installing two identical line cards in physically adjacent slots and bridging traffic across both line cards, the CiscoXR12000 Series Router SR-APS implementation provides SONET line and line card redundancy within a single router. This feature supports high availability and is intended for routers deployed at the service provider multiservice edge. The multirouter APS would also work for the APS functionality on the same card (between different physical ports of the same card).

Support for Framing and FEAC

The 4-Port Channelized OC-12 Line Card supports C-bit parity and M-23 mode of framing for DS3 paths with C-bit as the default. The 4-Port Channelized OC-12 Line Card does not support unframed operation for DS3 paths. Automatic configuration of transmit framing mode based on the detection of received framing mode is not supported. DS-3 C-bit parity format was advanced to increase far-end performance monitoring. In this format, because stuff bits are used at every opportunity, C-bits can be used for purposes other than denoting the presence of stuff bits, including:

- Far End Alarm and Control (FEAC) signal. In this case, C-bits are used to send alarm or status information from far-end terminals to near-end terminals and to initiate DS-3 and DS-1 remote loops. This is a repeating 16-bit word consisting of 0xxxxxx0 11111111. When no code is being transmitted, all 1's are transmitted. The code is transmitted for 10 times or the alarm state length, whichever is longer.
- DS-3 path parity information.

- Far-end block errors.
- Terminal-to-terminal path maintenance data link (LAPD, subset of Q.921).

FEAC is a communication channel between the far-end DS-3 terminal equipment and the near-end-DS-3 terminal equipment to send alarm and status information and loopback commands. FEAC is supported on the 4-Port Channelized OC-12 Line Card in DS-3 C-bit mode.

DS3/E3 BERT

BERT (Bit-Error Rate Testing) tests are used for analyzing quality and for problem resolution of digital transmission equipment. BERT tests the quality of an interface by directly comparing a pseudo-random or repetitive test pattern with an identical locally generated test pattern. BERT tests can be run on T3/E3 interfaces.

The BERT operation is data-intrusive. Regular data cannot flow on the T3/E3 path while the test is in progress. The path is reported to be in alarm state when BERT is in progress and restored to a normal state after BERT has been terminated.

The supported DS-3 BERT patterns on the line card are as follows:

- Pattern 2^15 and 2^20
- Pattern 2^15-1 (O.150)
- Pattern 2^20-1 (O.151)
- Pattern 2^23-1 (O.151)

It is also possible to insert single errors into the patterns.

The supported E-3 BERT patterns on the line card are as follows:

- Pattern 2^15, 2^20, and 2^23
- Pattern 2^15-1 (O.150)

The following examples are for T3 controller:

- RP/0/6/CPU0:ios(config-t3)# bert pattern 2e15
- RP/0/6/CPU0:ios(config-t3)# bert pattern 2e20

The following examples are for E3 controller:

- RP/0/6/CPU0:ios(config-e3)# bert pattern 2e23
- RP/0/6/CPU0:ios(config-e3)# bert pattern 2e15
- RP/0/6/CPU0:ios(config-e3)# bert pattern 2e20

DS3 Loopbacks

The 4-Port Channelized OC-12 Line Card supports different loopbacks at the DS-3/E3 level.

DS-3 supports the following loopbacks:

- Network Loopback
- Remote Loopback (This is done using FEAC in C-Bit mode for T3.)

E3 supports the following loopbacks:

- Network Loopback

Note Far-end equipment cannot command (using FEAC) the DS-3 path terminated on the 4-Port Channelized OC-12 Line Card to go into the loopback state.

Regulatory, Compliance, and Safety Information

This section includes regulatory, compliance, and safety information.

Translated Safety Warnings and Agency Approvals

The complete list of translated safety warnings and agency approvals is available in the *Regulatory Compliance and Safety Information for Cisco 12000 Series Internet Routers* publication. (Document Number 78-4347-xx.)

Electromagnetic Compatibility Regulatory Statements

FCC Class A Compliance

This equipment has been tested and found to comply with the limits for a Class A digital device, pursuant to part 15 of the FCC rules. These limits are designed to provide reasonable protection against harmful interference when the equipment is operated in a commercial environment. This equipment generates, uses, and can radiate radio-frequency energy and, if not installed and used in accordance with the instruction manual, may cause harmful interference to radio communications. Operation of this equipment in a residential area is likely to cause harmful interference, in which case users will be required to correct the interference at their own expense.

Modifying the equipment without Cisco's authorization may result in the equipment no longer complying with FCC requirements for Class A digital devices. In that event, your right to use the equipment may be limited by FCC regulation and you may be required to correct any interference to radio or television communication at your own expense.

You can determine whether your equipment is causing interference by turning it off. If the interference stops, it was probably caused by the Cisco equipment or one of its peripheral devices. If the equipment causes interference to radio or television reception, try to correct the interference by using one or more of the following measures:

- Turn the television or radio antenna until the interference stops.
- Move the equipment to one side or the other of the television or radio.
- Move the equipment farther away from the television or radio.
- Plug the equipment into an outlet that is on a different circuit from the television or radio. (That is, make certain the equipment and the television or radio are on circuits controlled by different circuit breakers or fuses.)

CISPR 22

This apparatus complies with CISPR 22/EN55022 Class B radiated and conducted emissions requirements.

Canada

English Statement of Compliance

This class A digital apparatus complies with Canadian ICES-003.

French Statement of Compliance

Cet appareil numérique de la classe A est conforme à la norme NMB-003 du Canada.

Europe (EU)

This apparatus complies with EN55022 Class B and EN55024 standards when used as ITE/TTE equipment, and EN300386 for Telecommunications Network Equipment (TNE) in both installation environments, telecommunication centers and other indoor locations.

Class A Notice for Hungary

Warning **This equipment is a class A product and should be used and installed properly according to the Hungarian EMC Class A requirements (MSZEN55022). Class A equipment is designed for typical commercial establishments for which special conditions of installation and protection distance are used.**

Figyelem **Figyelmeztetés a felhasználói kézikönyv számára: Ez a berendezés "A" osztályú termék, felhasználására és üzembe helyezésére a magyar EMC "A" osztályú követelményeknek (MSZ EN 55022) megfeleloen kerülhet sor, illetve ezen "A" osztályú berendezések csak megfelelo kereskedelmi forrásból származhatnak, amelyek biztosítják a megfelelo speciális üzembe helyezési körülményeket és biztonságos üzemelési távolságok alkalmazását.**

Class A Notice for Taiwan and Other Traditional Chinese Markets

Warning **This is a Class A Information Product, when used in residential environment, it may cause radio frequency interference, under such circumstances, the user may be requested to take appropriate countermeasures.** Statement 257

警告 這是甲類資訊產品，在居住環境中使用時，可能會造成射頻干擾，
在這種情況下，使用者會被要求採取某些適當的對策。

VCCI Class A Notice for Japan

Warning **This is a Class A product based on the standard of the Voluntary Control Council for Interference by Information Technology Equipment (VCCI). If this equipment is used in a domestic environment, radio disturbance may arise. When such trouble occurs, the user may be required to take corrective actions.** Statement 191

警告 /CCI 準拠クラスA機器（日本）
この装置は、情報処理装置等電波障害自主規制協議会（VCCI）の基準に基づくクラスA情報技術
装置です。この装置を家庭環境で使用すると電波妨害を引き起こすことがあります。この場合に
は使用者が適切な対策を講ずるよう要求されることがあります。

Class A Notice for Korea

Warning **This is a Class A Device and is registered for EMC requirements for industrial use. The seller or buyer should be aware of this. If this type was sold or purchased by mistake, it should be replaced with a residential-use type.** Statement 294

주의 A급 기기 이 기기는 업무용으로 전자파 적합 등록을 한 기기이
오니 판매자 또는 사용자는 이 점을 주의하시기 바라며 만약
잘못 판매 또는 구입하였을 때에는 가정용으로 교환하시기 바랍니다.

Laser Safety

Channelized line cards are equipped with a Class 1 laser, which emits invisible radiation. Do not stare into operational line card ports. The following laser warnings apply to the channelized and electrical interface line card:

- Class 1 Laser Product Warning
- General Laser Warning

Class 1 Laser Product Warning

The following warning applies to single-mode SR, IR, and LR optics:

Warning **Class 1 laser product.**

General Laser Warning

The following warning applies to the channelized and electrical interface line card:

Warning **Invisible laser radiation can be emitted from the aperture of the port when no cable is connected. Avoid exposure to laser radiation and do not stare into open apertures.**

For translated safety warnings, refer to the *Regulatory Compliance and Safety Information for Cisco 12000 Series Internet Routers* publication (Document Number 78-4347-xx).

GLOSSARY

Revised: March 2009, OL-17434-01

APS

Automatic protection switching (APS) refers to the mechanism of using a protect POS interface in the SONET network as the backup for a working POS interface. When the working interface fails, the protect interface quickly assumes its traffic load. Based on the configuration, the two circuits can be terminated in the same router, or in different routers.

F

FEAC

Far End Alarm Control (FEAC). C-bits are used to send alarm or status information from far-end terminals to near-end terminals and to initiate DS-3 and DS-1 remote loops. This is a repeating 16-bit word consisting of 0xxxxxx0 11111111. When no code is being transmitted, all 1's are transmitted. The code is transmitted for 10 times or the alarm state length, which ever is longer.

I

ISE

Internet Service Engine (ISE) is a programmable hardware-based forwarding engine 3. It provides 4-Mpps performance with traffic shaping and advanced QoS support.

M

MBus

Maintenance bus (Mbus) is a communication channel that interconnects to each of the line cards on the router. It is a 1 Mbps - 2 wire serial interface that provides logging details, online insertion and removal (OIR) of line card and console access to the line card using **attach** command.

O

OIR

Online insertion and removal (OIR) is a feature supported by line cards, allowing removal of the cards while the router and the cards are activated, without affecting the operation of other cards or the router.

P

PRP

Performance route processor (PRP) is the newer version of the gigabit route processor (GRP). The main function of the PRP is to boot and manage line cards, to provide and coordinate routing services, to build and distribute FIB tables across line cards, to provide intelligence and console and auxiliary ports; and to enable system monitoring and access.

INDEX

Numerics

I

L

P

T