CHAPTER 1

Cisco XR 12406 Router Overview

This chapter provides an overview of the Cisco XR 12406 Router. It contains physical descriptions of the router hardware and major components, and functional descriptions of the hardware-related features.

Router Description

The Cisco XR 12406 Router, shown in Figure 1-1 and Figure 1-3, is a member of the Cisco XR 12000 Series Router family. The Cisco XR 12406 Router scales the Internet Service Provider edge from speeds of T3/E3 (44.7/34.4 Mbps) up to OC-192/STM-64 or 10GE (10 Gbps).

Note Illustrations are shown without the front door for clarity.

Figure 1-1 Cisco XR 12406 Router—Front View (with PRP installed)

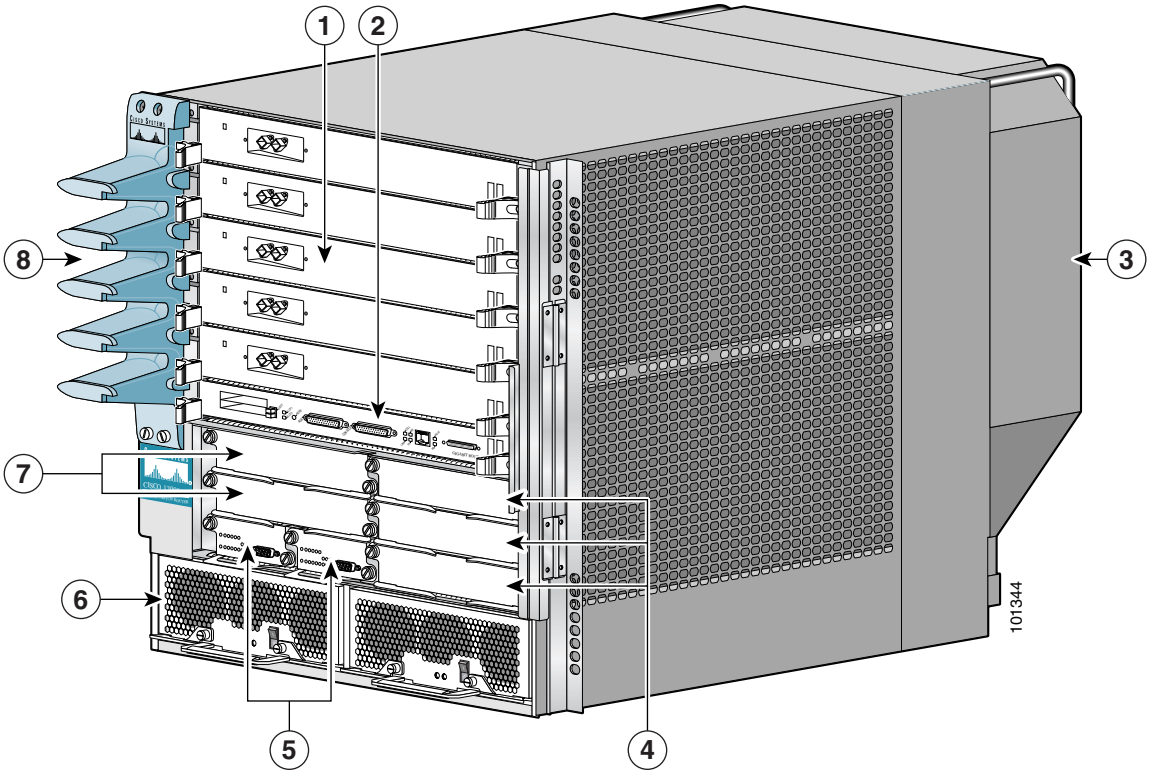

1	Line card slots (five)	**5**	Alarm card slots (two)
2	Route processor slot	**6**	Power module bays (two)
3	Blower module	**7**	CSC slots (2)
4	SFC slots (3)	**8**	Cable management bracket

Figure 1-2 Cisco XR 12406 Router—Front View (with PRP-3 installed)

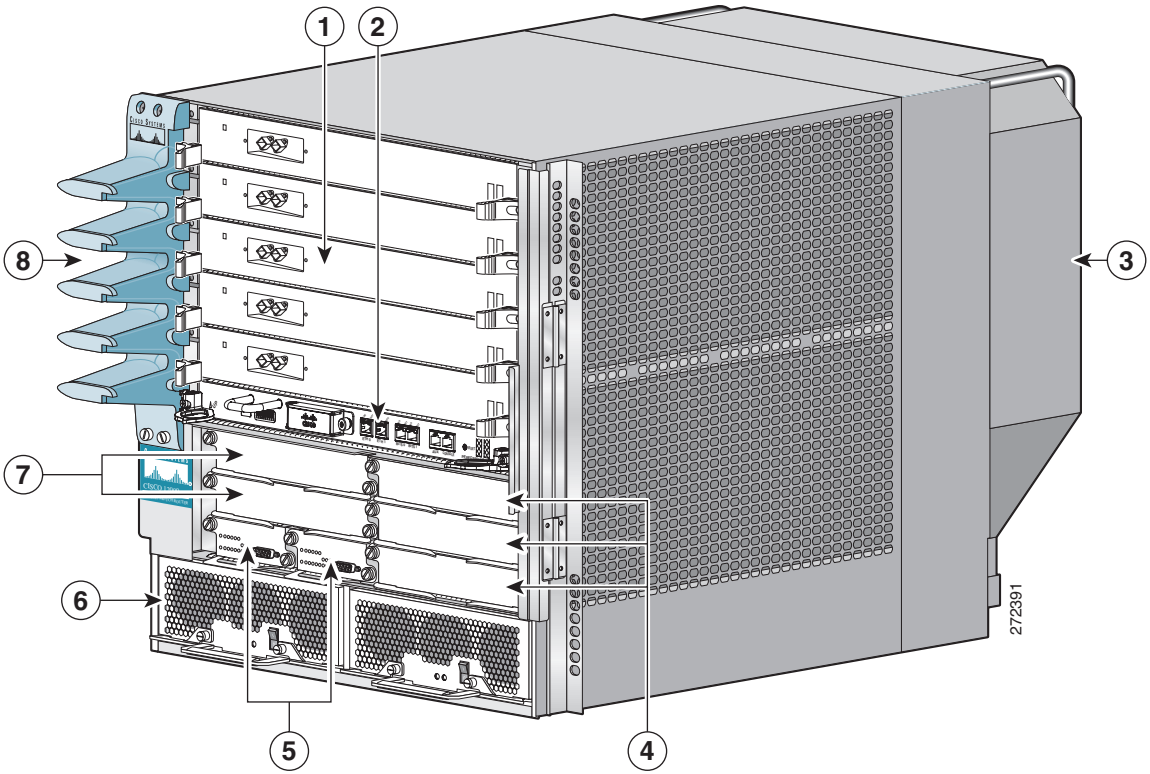

Figure 1-3 Cisco XR 12406 Router—Rear View

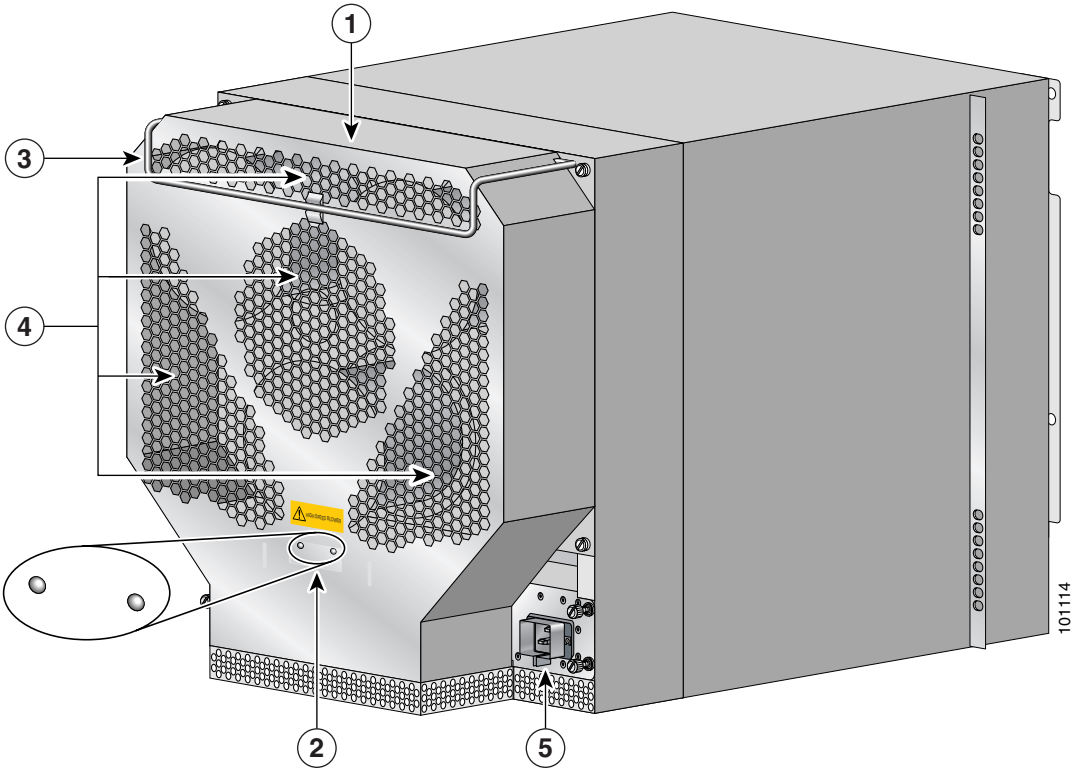

1	Blower module	**4**	Air exhaust vents
2	Blower module LEDs	**5**	PDU (behind Blower module; AC PDU shown)
3	Blower module handle	—	

With a chassis height of 18.5 inches (46.9 cm), four Cisco XR 12406 Routers can be installed in a single standard 7-foot (2.15-m) equipment rack.

Cisco XR 12406 Router supports system software downloads for most Cisco XR IOS software upgrades, which enables you to remotely download, store, and boot from a new Cisco XR IOS image.

Features

Cisco XR 12406 Router has the following key features:

- Route Processor (PRP-2)—Slot 5 (bottom slot) is the recommended slot for the first route processor. When the router is equipped with a redundant route processor, it can be installed in any of the five regular line card slots.
- Line Cards—Up to five OC-192 line cards, four if redundant route processors are installed. These slots support the online insertion and removal (OIR) feature so installed cards are hot-swappable: A failed card can be removed and replaced with the router powered on.
- Clock and Scheduler Cards (CSCs) and Switch Fabric Cards (SFCs)—Two dedicated hot-swappable slots for CSCs; three dedicated hot-swappable slots for SFCs.

Note When operating your router with a single CSC, the second CSC slot must have a CSC blank filler (MAS-GSR6-CSCBLNK=) installed to ensure EMI compliance.

- Two dedicated alarm card slots (for 1+1 redundancy)
- Alarm and Illumination—Alarm and illumination for operating ranges in the card cage, clock and scheduler card, and switch fabric card bays.
- Two hot-swappable AC-input power supplies or DC-input power entry modules (PEMs).

Note When operating your router on a single AC-input power supply or DC-input PEM, the second power module bay must have a blank filler (MAS-GSR-PWRBLANK=) installed to ensure EMI compliance.

- All power modules and other field replaceable units (FRUs), except for the air blower module and the power distribution unit (PDU), can be removed from the front of the chassis.
- All source power connections are located at the rear of the chassis on the PDU (see Figure 1-3).
- A new stylish front door hides router cabling and can be installed to open from the right side or left side to give you total flexibility.

- Network Equipment Building Systems—Cisco XR 12406 Router complies with the Network Equipment Building System (NEBS) Criteria Level 3 requirements defined in SR-3580 for flammability, structural, and electronics compliance.
- Electromagnetic Compatibility and Electrostatic Discharge Compliant— The Cisco XR 12406 Router complies with emissions, immunity, and electrostatic discharge (ESD) standards for both product and packaging.
- Bonding and Grounding—Bonding and grounding for safety, circuit protection, noise currents, reliability, and operations compliance.
- Environmental Monitoring—the Cisco XR 12406 Router complies with environmental monitoring standards for operating temperature and humidity, as well as handling temperature and humidity (except for heat dissipation).
- Shock and Vibration—the Cisco XR 12406 Router has been shock- and vibration-tested for operating ranges, handling, and earthquake standards to NEBS (Zone 4 per GR-63-Core). These tests have been conducted in earthquake environment and criteria, office vibration and criteria, transportation vibration and criteria, and packaged equipment shock criteria.
- Fiber Cable Management—Fiber cable management with support for high-density fiber Fast Ethernet (FE) ports.
- Current 1.275-inch pitch line cards will fit in the line card cage with the addition of a front panel adapter cover. The line card adapter cover is included with the 1.275-inch line card.

Physical and Functional Description

The following are the main components that make up the Cisco XR 12406 Router:

- One route processor with a second (redundant) route processor option
- Up to 5 line cards (4 if there are redundant route processors)
- 2 clock scheduler cards (CSCs)
- 3 switch fabric cards (SFCs)
- 2 alarm cards
- 2 power modules
- Backplane and maintenance bus
- Blower module
- 2 air filters

These components and their functions are described in this section. See Chapter 5, "Maintaining the Router" for instructions to remove and replace the FRUs.

Route Processor

The route processor for the Cisco XR 12406 Router is the Performance Route Processor (PRP-2). For detailed information about the Performance Route Processor, refer to the Cisco document, *Performance Route Processor Installation and Configuration Guide*.

The PRP-2 and PRP-3 performs the following primary functions:

- Executes routing protocol stacks
- Performs all protocol communications with other routers
- Builds and distributes forwarding information to all line cards
- Uploads the operating system software images to all installed line cards during power-up
- Provides out-of-band system console and auxiliary ports and an Ethernet port for router configuration and maintenance
- Monitors and manages the power and temperature of system components such as line cards, power supplies, and fans

The Cisco PRP-2 and PRP-3 delivers all these functions with enhanced performance and capabilities. It also delivers the following feature enhancements (depending on the software version running):

- Gigabit Ethernet management port
- Hard-drive support (optional part)
- BITS input ports
- 1 GB compact image Flash memory support (optional part)
- Memory scalability up to 4 GB with PRP-2 and up to 8 GB with PRP-3.

The PRP-2 and PRP-3 communicates with the line cards either through the switch fabric or through the MBus. The switch fabric connection is the main data path for routing table distribution as well as for packets that are sent between the line cards and the PRP. The MBus connection allows the PRP-2 and PRP-3 to download a system bootstrap image, collect or load diagnostic information, and perform general, internal system maintenance operations.

The PRP-2 can be designated as either the Designated System Controller (DSC) or the Secure Domain router (SDR).

The Designated System Controller (DSC) performs the following functions:

- Implements control plane operations for the chassis
- Monitors temperature and voltage
- Monitors line cards
- On boot up, the first card to become active is designated as the DSC.

The Secure Domain Router (SDR) controls domain security features independent of any other SDRs on the network.

In addition to the functionality listed for the PRP-2, PRP-3 provides the following specific functions:

- Reduced boot time.
- Increased overall scalability.
- Improved memory access rates and scale.
- Improved CPU performance through dual 1.3-GHz PPC processor cores.
- Improved packet processing using hardware-based acceleration.
- 10-G bandwidth backplane connectivity.

- Support for all 124xx and 128xx chassis, except low speed fabric (2.5G).
- New ROMMON that supports IPv4 network configuration directly.

Performance Route Processor Overview

The performance route processor (PRP-2) uses a Motorola PowerPC 7457 CPU that runs at an external bus clock speed of 133 MHz and has an internal clock speed of 1.3 GHz.

Figure 1-4 identifies the slots, ports, and LEDs on the PRP front panel.

Figure 1-4 Performance Route Processor-2 (PRP-2) Front Panel

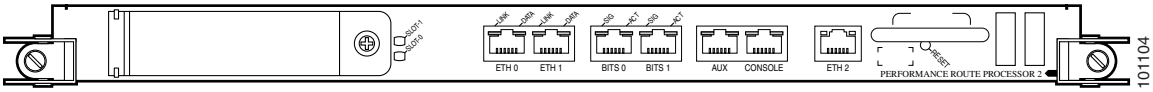

Table 1-1 PRP-2 Front Panel Hardware Components

1	PCMCIA flash disk slots (shown with cover in place) and slot LEDs	**4**	Console serial port
2	RJ-45 Ethernet ports and data status LEDs	**5**	Reset button
3	Auxiliary serial port	**6**	Alphanumeric messages

Figure 1-5 Performance Route Processor 3 (PRP-3) Front Panel

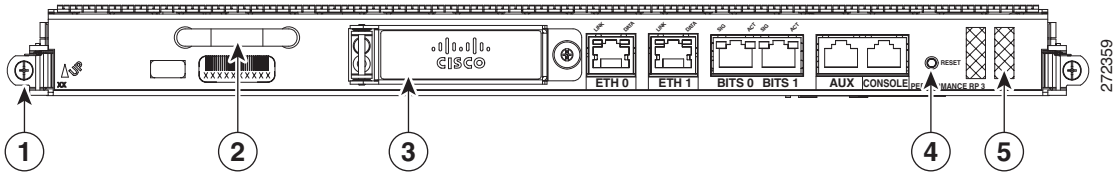

Table 1-2 PRP3 Front Panel Hardware Components

Numeric Callout	Hardware Components
1	Ejecter Lever
2	Handle
3	External Compact Flash
4	Reset button
5	Alphanumeric LEDs

PRP-3 is the route processor for the Cisco XR 12404 and 12804 Router chassis running Cisco IOS XR Software Release 3.8.0 or a later release. The PRP-3 is available as product number PRP-3 or PRP-3= for a primary route processor and is available as PRP-3/R for a redundant route processor. PRP-3 has significant improvements over PRP-2. These improvements include increased speed, improved scalability, higher system memory, faster packet processing. Because PRP-3 does not support Cisco IOS, the bootflash memory no longer exists in PRP-3. PRP-3 ROMMON has software intelligence to download a Cisco IOS XR image without the support of bootflash memory.

Note PRP-3 supports Cisco XR 12404 (10 G per slot fabric) and Cisco XR 12804 (40 G per slot fabric) Router chassis only. PRP-3 does not support Cisco XR 12004, 12006, 12010, and 12016 Router chassis (2.5 G low-speed fabric).

PRP PCMCIA Card Slots and Status LEDs

Two PCMCIA card slots (slot 0 and slot 1) provide the PRP with additional flash memory capacity. All combinations of different flash devices are supported by the PRP. You can use ATA flash disks, Type 1 or Type 2 linear flash memory cards, or a combination of the two.

Note The PRP only supports +5.2 VDC flash memory devices. It does *not* support +3.3 VDC PCMCIA devices.

Status LEDs (Slot-0 / Slot-1) indicate when the flash memory card in that slot is accessed (see Figure 1-4). Each slot has an eject button (located behind the cover) to remove a flash card from the slot.

Note PRP-3 does not have PCMCIA slots (slot 0 and slot 1). PRP-3 has an external CompactFlash (disk0:) that replaces the PCMCIA slots.

PRP Ethernet Ports and Status LEDs

The PRP has two 8-pin media-dependent interface (MDI) RJ-45 ports for either IEEE 802.3 10BASE-T (10 Mbps) or IEEE 802.3u 100BASE-TX (100 Mbps) Ethernet connections. These ports are labeled ETH 0 and ETH 1.

The transmission speed of the Ethernet port is not user-configurable. You set the speed through an autosensing scheme on the PRP which is determined by the network that the Ethernet port is connected to. However, even at an autosensed data transmission rate of 100 Mbps, the Ethernet port can only provide a usable bandwidth of substantially less than 100 Mbps. You can expect a maximum usable bandwidth of approximately 20 Mbps when using an Ethernet connection.

The following LEDs on the front panel indicate traffic status and port selection (Figure 1-6):

- LINK, EN, TX, RX—Indicate link activity (LINK), port enabled (EN), data transmission (TX), and data reception (RX).
- PRIMARY—Indicates which Ethernet port is selected (ETH 0 or ETH 1).

Note Because both ports are supported on the PRP, ETH 0 is always on. ETH 1 lights when it is selected.

Figure 1-6 PRP-2 Port Activity LEDs—Partial Front Panel

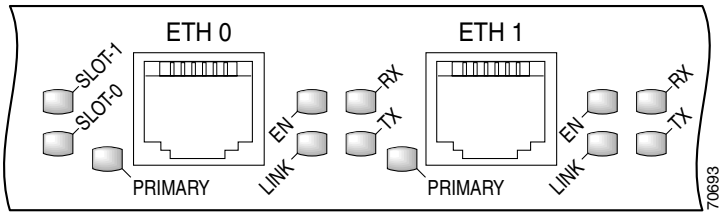

Figure 1-7 PRP-3 Port Activity LEDs—Partial Front Panel

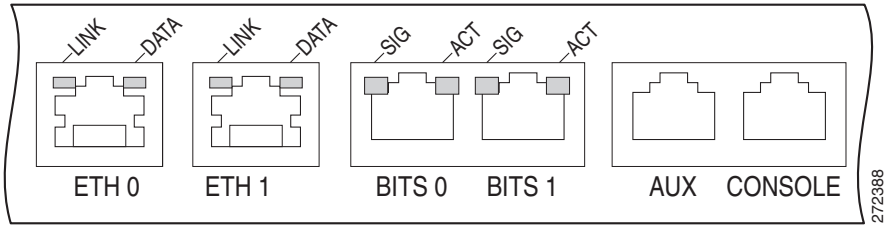

PRP Auxiliary and Console Ports

The auxiliary and console ports on the PRP are EIA/TIA-232 (also known as RS-232) asynchronous serial ports. These ports connect external devices to monitor and manage the system.

- The auxiliary port—A (male) plug that provides a data terminal equipment (DTE) interface. The auxiliary port supports flow control and is often used to connect a modem, a channel service unit (CSU), or other optional equipment for Telnet management.
- The console port—A (female) receptacle that provides a data circuit-terminating equipment (DCE) interface for connecting a console terminal.

PRP-3 LEDs

The PRP-3 has the following LED indicators:

- Two Ethernet port LEDs used in conjunction with each of the three RJ-45 Ethernet connectors:
  - LINK—Indicates link activity
  - DATA—Indicates data transmission or reception
- Two BITS port LEDs used in conjunction with each of the two BITS ports:
  - SIG—Indicates carrier signal available
  - ACT—Indicates that the interface is active

Note BITS feature is not supported in Release 3.8.0.

- One auxiliary port (AUX) and one console port (CONSOLE) LED:
  - AUX—Used as a backup for the command outputs on the Console.
  - CONSOLE—Used for configuring the router by connecting an RJ-45 cable to the console terminal. The router can be configured through the console terminal.

PRP Memory Components

This section describes various types of memory used on the PRP to support router functions. Table 1-3 provides a quick reference of the different types of memory, and Figure 1-8 shows the location on the PRP board.

Table 1-3 PRP-2 Memory Components

Type	Size	Quantity	Description	Location
SDRAM[1]	2 GB (default) or 4 GB (optional)	1 or 2	2-GB or 4-GB DIMMs (based on desired SDRAM configuration) for main Cisco IOS XR software functions	U15 (bank 1)[2] U18 (bank 2)
SRAM[3]	2 MB (fixed)	—	Secondary CPU cache memory functions	—
NVRAM[4]	2 MB (fixed)	1	System configuration files, register settings, and logs	—
HDD	40 GB	1	Contains log and crash information for specific Cisco IOS XR versions.	—
Flash memory	2 GB or 4 GB (optional) Compact Flash	1	Contains Cisco IOS XR boot image (bootflash), crash information, and other user-defined files	P3
	4 MB Boot ROM	1	Stores the ROMMON minimum boot image (MBI).	
	Flash disks[5] 2 GB (default) or 4 GB (optional)	1 or 2	Contains Cisco IOS XR software images, system configuration files, and other user-defined files on up to two flash disks	Flash disk slot 0 and slot 1
	1 GB CF[6]	1	Contains large Cisco IOS XR software images	—

1. Default SDRAM configuration is 2-GB for PRP-2. Bank 1 (U15) must be populated first. You can use one or both banks to configure SDRAM combinations of 2 GB and 4 GB for the PRP-2. 1.5-GB configurations.and DIMM devices that are not from Cisco are not supported.
2. If both banks of the PRP-2 are populated, bank 1 and bank 2 must contain the same size DIMM.
3. SRAM is not user configurable or field replaceable.
4. NVRAM is not user configurable or field replaceable.
5. ATA Flash disks are supported in the PRP-2.
6. Optional PRP-2 hardware. Compact disks that are not from Cisco are not supported.

Figure 1-8 PRP-2 Memory Locations

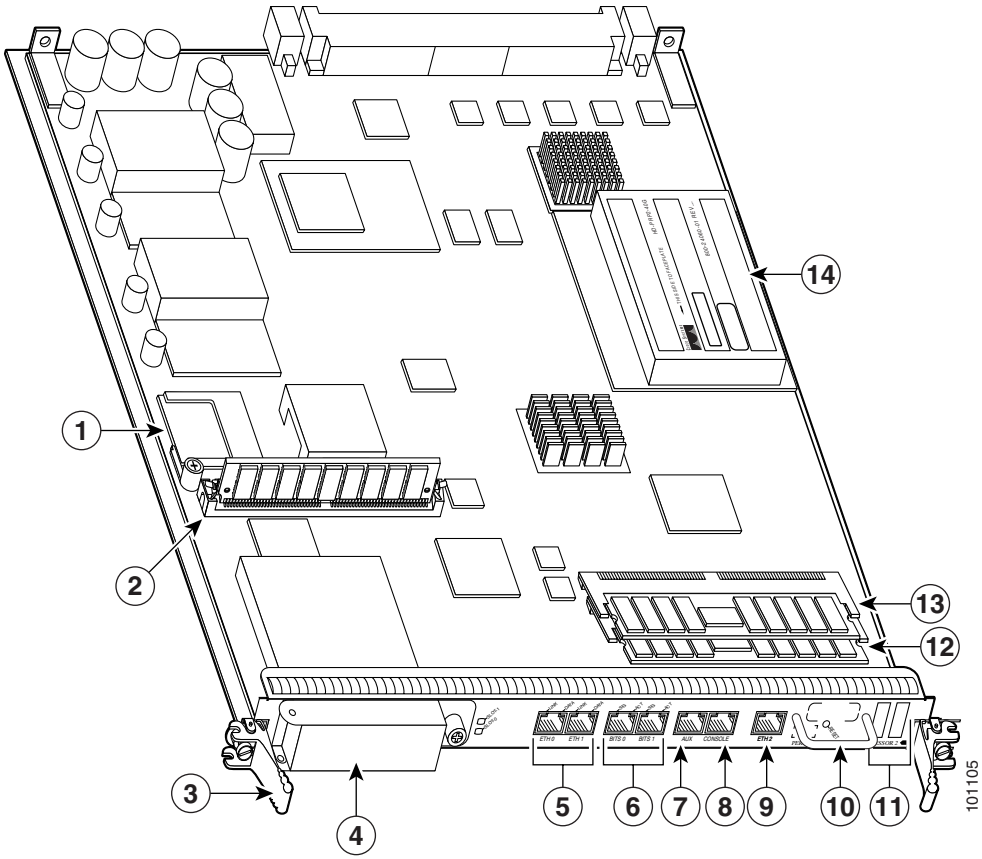

Figure 1-9 PRP-3 Memory Locations

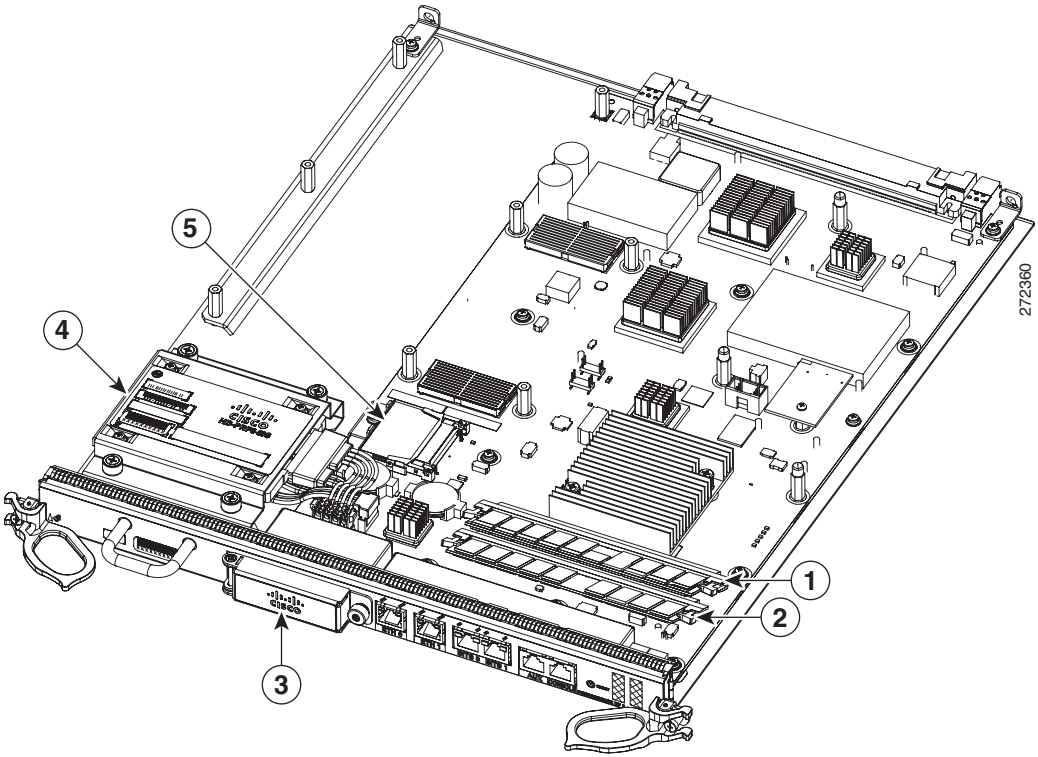

1	SDRAM DIMM: Bank 1 - Socket number U8
2	SDRAM DIMM: Bank 2 - Socket number U10
3	External CompactFlash
4	Hard disk (80 GB)
5	Internal CompactFlash

Table 1-4 PRP-3 Memory Components

Type	Size	Quantity	Description	Location
SDRAM[1]	2 GB (Default) for each DDR2 DRAM for a total system memory of 4 GB, option for upgrade to total system memory of 8 GB (4 GB each).	2	Two 2-GB default DDR2 DRAM for main CiscoIOSXR software functions. Provision for optional upgrade to 4 GB also possible to provide total system memory of 8 GB.	U8 (bank 1)[2] U10 (bank 2)
NVRAM[3]	2 MB (fixed)	1	System configuration files, register settings, and logs	—
Flash memory	2 GB (default) or 4 GB (optional) Flash disks[4]	2 (Internal and External Compact Flash)	Contains Cisco IOS XR software images, system configuration files, and other user-defined files on two CompactFlash.	Internal and External Compact Flash[5]
Flash boot ROM	8 MB	1	Flash EPROM for the ROM monitor program boot image	—
HDD[6]	80 GB SATA	1	Contains log and crash information for specific Cisco IOS XR versions	—

1. Default SDRAM configuration is a total of 4 GB (2 x 2GB) system memory for PRP-3. Bank 1 (U15) must be populated first. You can use one or both banks to configure DDR2 DRAM combinations of 2 GB or 4 GB for the PRP-3. DIMM devices that are not from Cisco are not supported.
2. If both banks of the PRP-3 are populated, bank 1 and bank 2 must contain the same size DIMM.
3. NVRAM is not user configurable or field replaceable.
4. ATA Flash disks are supported in the PRP-3.
5. PRP-3 provides an onboard internal CompactFlash and also an external CompactFlash. The external CompactFlash in PRP-3 replaces the two PCMCIA slots (slot0 and slot1) of PRP-2.
6. Hard disk drives that are not from Cisco are not supported.

PRP SDRAM

The PRP uses Error Checking and Correction (ECC) Synchronized Dynamic Random Access Memory (SDRAM) to store routing tables, protocols, network accounting applications, and to run Cisco IOS software.

Table 1-5 lists the DRAM configurations for the PRP. If you are using:

- One DIMM—Bank 1 (U15) must be populated first.
- Two DIMMs—You cannot mix memory sizes; both banks must contain the same size DIMM.

Table 1-5 PRP-2 DRAM Configurations

Total SDRAM	SDRAM Sockets	Number of DIMMs
Total SDRAM	**SDRAM Sockets**	**Number of DIMMs**
2 GB[1]	U15 (bank 1) U18 (bank 2)	One 2 GB DIMM or Two 2 GB DIMMs
4 GB	U15 (bank 1) U18 (bank 2)	One 4 GB DIMM or Two 4 GB DIMMs

1. Default shipping configuration.

Caution DRAM DIMMs must be 3.3-volt, 60-nanosecond devices only. Do not attempt to install other devices in the DIMM sockets. To prevent memory problems, use the memory products approved by Cisco, listed in Table 1-5.

PRP-3 provides more system memory than PRP-2. PRP-3 is shipped with 2 GB of system memory in each DDR2 DRAMs, for a total of 4 GB and provides an upgrade option for a total of 8 GB (4 GB x 2 DRAM).

Note The two DIMMs must be of the same sizes. Do not use two different DIMM sizes together.

Table 1-6 PRP3 DDR2 DRAM Configuration

Total SDRAM	SDRAM Sockets	Number of DIMMs
4 GB	U8 (bank 1) U10 (bank 2)	Two 2 GB DIMMs
8 GB	U8 (bank 1) U10 (bank 2)	Two 4 GB DIMMs

PRP SRAM

Static Random Access Memory (SRAM) provides 2 MB of secondary CPU cache memory. Its principal function is to act as a staging area for routing table updates, and for information sent to and received from the line cards. SRAM is *not* user-configurable and cannot be upgraded in the field.

PRP NVRAM

Non-volatile Random Access Memory (NVRAM) provides 2 MB of memory for system configuration files, software register settings, and environmental monitoring logs. Built-in lithium batteries retain the contents of NVRAM for a minimum of 5 years. NVRAM is *not* user configurable and cannot be upgraded in the field.

PRP Flash Memory

Use flash memory to store multiple Cisco IOS XR software and microcode images that you can use to operate the router. You can download new images to flash memory over the network (or from a local server) to replace an existing image, or to add it as an additional image. The router can be booted (manually or automatically) from any of the stored images in flash memory.

Flash memory also functions as a Trivial File Transfer Protocol (TFTP) server to allow other servers to boot remotely from the stored images, or to copy them into their own flash memory.

The system uses two types of flash memory on PRP-2:

- Onboard flash memory (called *bootflash)*—Contains the Cisco IOS boot image

- Flash memory disks (or cards)—Contain the Cisco IOS software image

Table 1-7 lists supported flash disk sizes and Cisco part numbers.

Table 1-7 Supported Flash Disk Sizes

Flash Disk Size[1]	Part Number
2 GB[2]	MEM-FD2G=
4 GB	MEM-FD4G=

1. 4 GB is supported with 2 GB mode prior to Release 3.8.0.
2. Default shipping configuration.

PRP-3 Compact Flash

PRP-3 provides more flash memory than PRP-2. PRP-3 uses flash memory to store Cisco IOS XR software images. PRP-3 includes a default internal flash memory of 2 GB and also has an external flash memory of 2 GB. A flash memory upgrade option is also available for a total of 8 GB (2 x 4 GB).

PRP-2 and PRP-3 compactflashes are not compatible with each other and hence PRP-2 compactflash cannot be used in PRP-3 and vice versa. PRP-3 uses Multiword DMA to access the compactflash device, a PRP-2 compactflash does not support this access type.

Note The PRP-3 external CompactFlash disk replaces the two PCMCIA slots of PRP-2. The external CompactFlash disk can be installed or removed from the PRP-3 front panel. The internal CompactFlash disk memory is denoted as compactflash, while the external CompactFlash disk is denoted as disk0:.

Table 1-8 PRP-3 CompactFlash Disk Sizes

Flash Disk Size	Part Numbers
2 GB	FLASH-PRP3-2G(=)
4 GB	FLASH-PRP3-4G(=)

Line Cards

The Cisco XR 12406 Router is shipped pre-installed with the number and type of line cards that you ordered. Line cards and route processors can be installed in two basic combinations to support route processor redundancy and a variety of physical network media:

- Nonredundant route processor—One route processor and up to five CiscoXR12000 Series Router line cards.
- Redundant route processors—Two route processors and up to four CiscoXR12000 Series Router line cards.

Line cards can be installed in any slot—zero (0) through five (5)—in the card cage. Slot number 5 is the recommended default route processor slot. Single-mode and multimode line cards are shown in Figure 1-10.

Note Refer to the current s software release notes for the most up-to-date list of supported line cards (see "Obtaining Documentation and Submitting a Service Request" section on page -xii).

Line cards provide the interfaces to the router's external physical media. External connections are made from the front of the chassis to the connectors on the line card face plates. The line cards communicate with the route processor and exchange packet data with each other through the switch fabric cards in the switch fabric and alarm card cage.

Caution Unoccupied card slots in the line card and route processor card cage must have a blank filler panel installed (12000-WIDE-BLANK=) for electromagnetic compatibility (EMC) and to ensure proper air flow through the chassis. When the faceplate of a line card does not completely fill the card slot opening, a narrow card filler panel must be installed (ACS-GSR16-LCFILL=).

A cable-management bracket attaches to the faceplate of each line card to manage and organize the network interface cables connected to the individual ports on the line card.

Line cards installed in the router support online insertion and removal (OIR), which means you can remove and replace a line card while the router remains powered on.

Note For instructions on removing, replacing, and configuring the line cards, see the configuration note shipped with each line card when ordered as an FRU.

Figure 1-10 Sample Line Cards

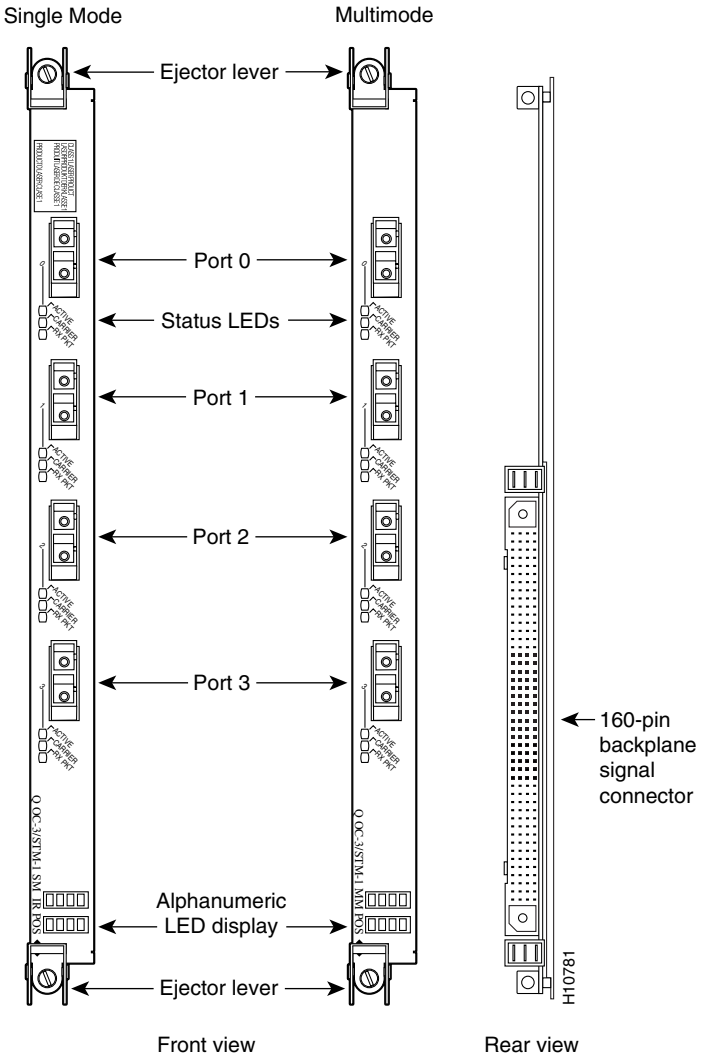

Multigigabit Crossbar Switch Fabric

The Cisco XR 12406 Router switch fabric circuity provides synchronized gigabit-speed interconnections for the line cards and the route processor. The switch fabric circuitry resides in five fabric card slots: two for CSCs; three for SFCs (Figure 1-11).

Figure 1-11 Clock and Scheduler and Switch Fabric Card Bays

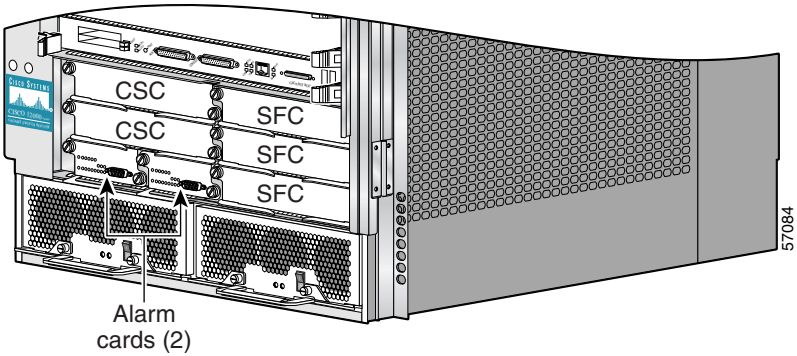

Switch Fabric Card Types

The CSCs are installed in the half-width slots labeled CSC 0 and CSC 1 on the lower left side of the chassis, located directly beneath the route processor and line card cage and directly above the alarm card bays. The three SFCs are installed in the half-width slots labeled SFC 0, SFC 1, and SFC 2 on the lower right side of the chassis.

Note To operate the Cisco XR 12406 Router, you must have at least one CSC card installed, in addition to SFC and alarm cards.

The CSC contains the following functionality:

- System clock—The system clock synchronizes data transfers between line cards or between the route processor and a line card, through the switch fabric. In systems with redundant CSCs, the two system clocks are synchronized so that if one system clock fails, the other clock takes over. The system clock signal is sent to all line cards, the route processor, and switch fabric cards.
- Scheduler—The scheduler handles requests from the line cards for access to the switch fabric. When the scheduler receives a request from a line card for switch fabric access, the scheduler determines when to allow the line card access to the switch fabric.
- Switch fabric—The switch fabric carries the user traffic between line cards or between the route processor and the line cards. The switch fabric card contains only the switch fabric circuitry and receives scheduling information and system clock information from the CSC.

The SFC contains only the switch fabric circuitry, which carries user traffic between line cards or between the route processor and the line cards. The SFC receives scheduling information and the system clock sent from the CSC.

Switch Fabric Switching Capacity and Router Type

The Cisco XR 12406 Router is based on a 10-Gbps switch fabric, where each CSC or SFC provides a 10-Gbps full-duplex connection to each line card in the system. The 10-Gbps switch fabric consists of the Clock and Scheduler Card (product number GSR6-CSC= for original fabrics, and 12406E-CSC= for enhanced fabric versions) and the Switch Fabric Card (product number GSR6-SFC= for original fabrics, and 12406E-SFC= for enhanced fabric versions). The 10-Gbps switch fabric cards are labeled simply CSC and SFC.

Note You cannot mix 2.5-Gbps switch fabric cards and 10-Gbps switch fabric cards in a chassis. The router will not operate with a mix of switch fabric card types.

Switch Fabric Redundancy

Equipping the router with two CSCs provides data path, scheduler, and reference clock redundancy. The interfaces between the line cards and the switch fabric are monitored constantly. If the router detects a loss of synchronization (LOS), it automatically activates the data paths of the redundant CSC, and data flows across the redundant path. The switch to the redundant CSC occurs within 0.5 second, with little or no loss of data.

Note The enhanced Cisco XR 12406 chassis (XR-12000/6 configured with 12406/120 fabric option) ships with redundant CSC which is required to maintain High Availability for the system.

Alarm Cards

The Cisco XR 12406 Router has two alarm card slots (Figure 1-12). Each alarm card performs the following function or indicates the following condition:

- Alarm output
- CSC status
- SFC status
- Alarm card status
- Power source and power entry module status
- Alarm relay contacts

The entire alarm function has been implemented on redundant alarm cards with OIR maintenance (hot-swappable) functionality.

Figure 1-12 Alarm Card Features

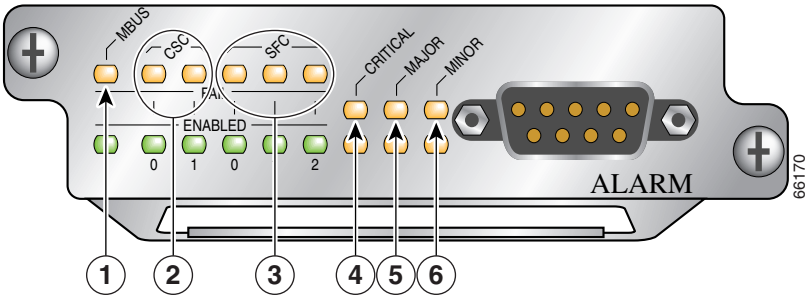

1	MBus status LED	**5**	Major alarm LED
2	CSC status LEDs (two)	**6**	Minor alarm LED
3	SFC status LEDs (three)	**–**	Alarm relay contact connector
4	Critical alarm LED	—	

Note The Cisco XR 12406 Router must be populated with two alarm cards, to meet EMI standards.

Alarm Output Function

The alarm output function consists of a group of relays, LEDs, and their associated drivers connected to an output port on the MBus module.

The alarm output function is controlled by the software on the route processor. When a signal is received from the route processor, the MBus module on the alarm card activates specific relays to signal an alarm condition. There are three alarm condition severity levels: critical, major, and minor. The critical, major, and minor LEDs are paired for redundancy to protect against a single failed LED.

Note Alarm cards for some Cisco XR 12000 Series Router have both audible and visible alarm indicators. The alarm card for the Cisco XR 12406 Router provides only visible alarm indicators as local alerts to unusual conditions in the router.

The Cisco IOS XR software running on the route processor determines whether a given alarm condition is a critical, major, or minor alarm. Typing the **show** commands **sh gsr table** and **sh env all** gives you the table of limits and current readings for the LEDs.

Clock and Scheduler Card and Switch Fabric Card Status

The alarm card provides OK and FAIL indications for all clock and scheduler cards and switch fabric cards in the system. Redundant signals from the fabric cards are brought out to the LEDs on each alarm card. The alarm card does not control how these LEDs are used.

The MBus auxiliary power supply consists of a 50W DC-DC power supply and some current-sharing circuitry. Because the alarm card itself is powered by this supply, the on-board MBus module can report problems with the supply only when the redundant alarm card is in the chassis and providing MBus power.

Alarm Card Status

The ENABLED/FAIL pair of LEDs labeled MBUS indicate the status of the alarm card. The green ENABLED LED indicates that the MBus module on the alarm card is operating properly. The yellow FAIL LED indicates that the alarm card has detected an error in itself or with the MBus power supply.

Power Source Monitoring

The alarm card monitors the power modules and signals when there is a condition outside the normal range of operation. It discloses problems such as the following:

- Power source voltage is not being provided to a component
- A fault exists in the power source or power module
- Output voltage—Voltage monitor signal is outside the allowable range
- Output current—Current monitor signal is outside the allowable range

Alarm Relay Contact Connector

The 9-pin D-type alarm relay contact connector on the faceplate of the alarm card (see Figure 1-12) is used to connect external alarm indication equipment to the router so that alarm indicator signals in the router can be repeated elsewhere outside the router.

The pins on this connector are tied directly to the critical, major, and minor alarm relay contacts (normally open, normally closed, and common). Any event that causes one of the alarm LEDs on the alarm card faceplate to go on also activates the corresponding relay contact closure. The relay interface is rated at a maximum of 2A, 60V, or 50VA, whichever is greater.

Because alarm contact cables are entirely dependent on site-specific circumstances, alarm connector cables are not available from Cisco. For information about alarm connector wiring requirements and the pinout for the alarm connector interface, see the "Alarm Card Alarm Relay Connector Specifications" section on page A-5.

Power Subsystems

The Cisco XR 12406 Router can be powered by either an AC or DC power subsystem, as described in the following sections:

- AC Power Subsystem, page 1-29
- DC Power Subsystem, page 1-33
- Power Distribution, page 1-37

Note The Cisco XR 12406 Router can be either AC powered or DC powered; the router cannot accept two different types of power modules at the same time.

Note The enhanced Cisco XR 12406 chassis (XR-12000/6 configured with 12406/120 fabric option) ships with a redundant power supply, which is required to maintain high availability for the system.

Note A Cisco XR 12406 Router operating from an AC power source can be converted to operate from a DC power source, and vice versa. The conversion can be done in the field, but the system must be powered down.

AC Power Subsystem

The AC power subsystem consists of the following system components:

- AC PDU (one)
- AC-input power supplies (one for nonredundant operation; two for redundant operation)

Caution To ensure that the chassis configuration complies with the required power budgets, use the on-line power calculator. Failure to properly verify the configuration may result in an unpredictable state if one of the power units fails. Contact your local sales representative for assistance.

AC PDU

Facility AC power connects to AC-powered the Cisco XR 12406 Router though the AC PDU on the chassis rear panel (Figure 1-13).

Figure 1-13 AC Power Distribution Unit

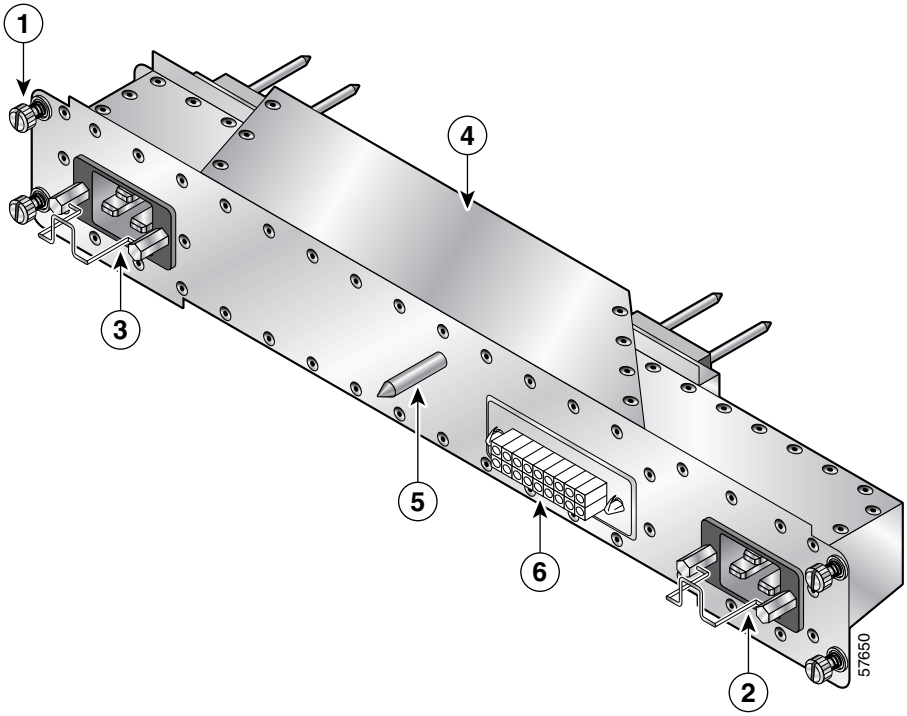

1	Captive screw	**4**	AC power distribution unit
2	AC power cord receptacle A	**5**	Guide pin
3	AC power cord receptacle B	**6**	Blower module connector

Depending on whether the router is configured for nonredundant or redundant power operation, the router ships with either one or two 14-foot (4.3-m) AC power cords to connect the PDU to the facility AC power source. AC power cords with different source AC power plugs are available. (See Figure 2-3 on page 2-16.)

Note For true redundancy, connect each power supply to a separate power circuit protected by its own circuit breaker.

AC-Input Power Supply

The AC-input power supply is a removable power module that installs in one of the bottom two bays on the front of the chassis (see Figure 1-1). These power modules support the OIR feature and are hot-swappable (Figure 1-14).

Figure 1-14 AC-Input Power Supply

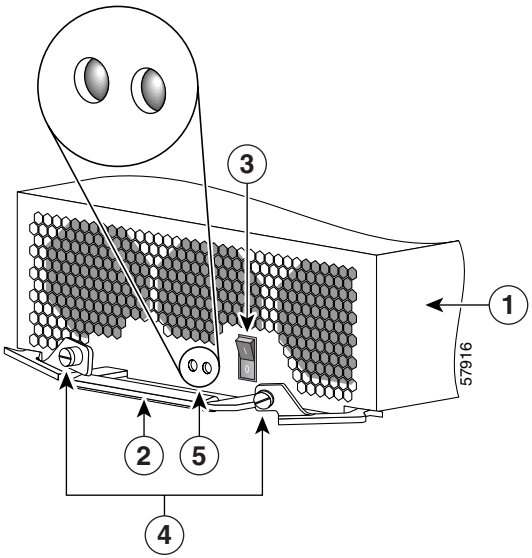

1	AC-input power supply	**4**	Release levers captive screws
2	Handle	**5**	LEDs
3	Power standby switch	—	

Note When operating your router on a single power module, the second power module bay must have a blank filler (MAS-GSR-PWRBLANK=) installed to ensure EMI compliance.

An AC-input power supply has the following features (see Figure 1-14):

- Original series Cisco XR 12406 Routers: A power factor corrector (PFC) allows the power supply to accept AC power source voltage from an AC power source operating from 100 to 120 VAC 20-amp service in North America, and a range of from 185 to 264 VAC 16-amp service in an international environment.
- Enhanced series Cisco XR 12406 Routers: Supports 220 VAC only which requires 20-amp service in North America, and 16-amp service in an international environment.
- Each AC-input power supply weighs approximately 14 pounds (6.4 kg), and can deliver up to 1400 W for original versions, or up to 1950 W for enhanced versions of the router.
- Each AC-input power supply requires a dedicated 20A service in North America (16 A international).
- A power standby switch on the faceplate temporarily disables the DC output power circuitry in the AC-input power supply.

Note This switch does not interrupt the incoming AC power in the AC-input power supply. Portions of the power supply circuitry are still under AC power as long as AC power is connected to the router.

- A handle is provided for ease in removing and replacing the power supply.
- Captive screws on the power supply ejector levers secure it in the power supply bay.
- Two LEDs on the faceplate to provide status information. Table 1-9 summarizes the function of these indicators.

Table 1-9 AC-Input Power Supply LED indicators

LED Label	Function	State	Description
AC	Input power	On	AC power source is present and is within specified limits.
		Off	Power source is not within specified limits.

Table 1-9 AC-Input Power Supply LED indicators (continued)

LED Label	Function	State	Description
DC	Output Power	On	Power supply is operating normally in a power-on condition.
		Off	Power supply is operating in a fault condition and shutdown has occurred.

DC Power Subsystem

The DC power subsystem consists of the following system components:

- DC PDU (one)
- DC-input PEMs (one for nonredundant operation; two for redundant operation)

Caution To ensure that the chassis configuration complies with the required power budgets, use the on-line power calculator. Failure to properly verify the configuration may result in an unpredictable state if one of the power units fails. Contact your local sales representative for assistance.

DC PDU

Facility DC power connects to DC-powered routers though the connector blocks on the DC PDU (Figure 1-15).

Figure 1-15 DC Power Distribution Unit

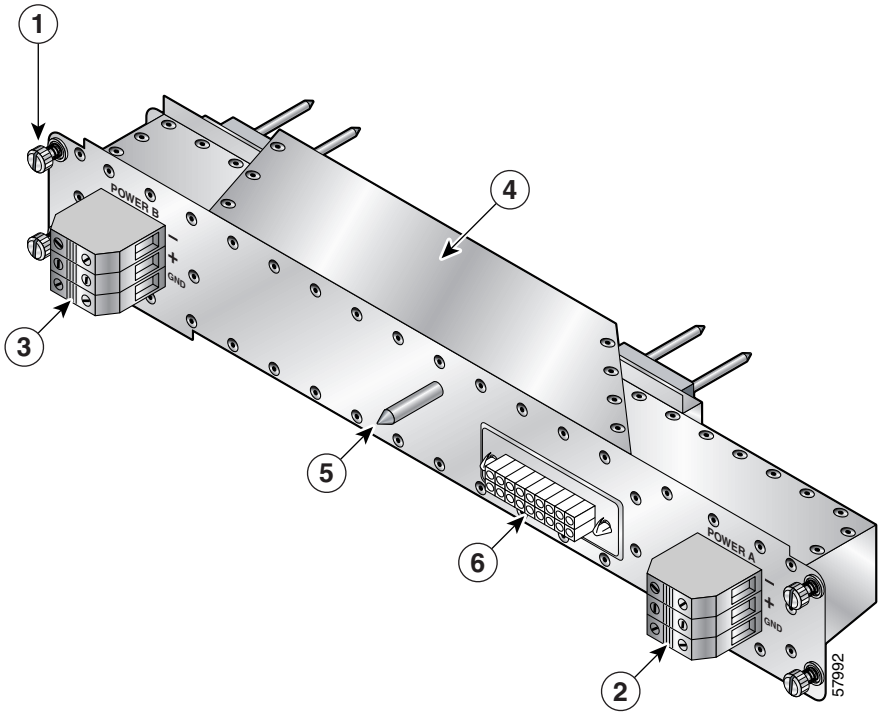

1	Captive screw	**4**	DC power distribution unit
2	DC power connector block A	**5**	Guide pin
3	DC power connector block B	**6**	Blower module connector

DC-input power is connected through the DC PDU on the chassis rear panel. The DC PDU is equipped with two DC power connector blocks. Each DC power connector block is equipped with three terminal ports. Leads from the DC source power should be connected to the terminal block. A negative lead is connected to the top port, a positive lead to the middle port, and a ground lead to the bottom port.

DC-Input Power Entry Module

The DC-input PEM (Figure 1-16) is a removable power module that installs in one of the bottom two bays on the front of the chassis (see Figure 1-1). These power modules support the OIR feature and are hot-swappable.

Note When operating your router on a single power module, the second power module bay must have a blank filler (MAS-GSR-PWRBLANK=) installed to ensure EMI compliance.

Caution The Cisco XR 12406 Router is configured for either AC power or DC power. Do not mix AC-input power supplies and DC-input PEMs.

Figure 1-16 DC-Input Power Entry Module

1	DC-input PEM	**4**	Captive screws on release levers
2	Handle	**5**	Air inlet for cooling fan
3	Circuit breaker ON/OFF switch	—	

A DC-input PEM (shown in Figure 1-16) has the following features:

- A circuit breaker switch on the faceplate turns the PEM on and off.
- A handle is provided for ease in removing and replacing the PEM.
- Captive screws on the PEM ejector levers secure it in the PEM bay.
- Three LEDs on the faceplate to provide status information. Table 1-10 summarizes the function of these indicators.

Table 1-10 DC-input PEM LED Indicators

LED Label	Color	Function
OUTPUT OK	Green	PEM is operating normally in a powered-on condition.
INPUT OK	Green	DC power is present at the PEM input and within the specified limits.
MISWIRE	Amber	Indicates input is wired backward at the PDU input.

- Each PEM weighs 10.5 pounds (4.76 kg), and can deliver up to 1400 W at -48 VDC.
- Each PEM requires a hardwired source DC power cable from the site DC power source to the DC PDU in the router. The DC power cable leads to the PDU should be #6 American Wiring Gauge (AWG) high-strand-count wires.
- Only a DC power source that complies with the safety extra-low voltage (SELV) requirements in UL1950, CSA 950, EN 60950, and IEC950 can be connected to a PEM.
- The router requires a dedicated 45A DC circuit breaker for the DC power source. This circuit breaker should protect against short-circuit and overcurrent faults in accordance with United States National Electrical Code NFPA 70 (United States), Canadian Electrical Code, part I, CSA C22.1 (Canada), and IEC 364 (other countries).

Note We recommend that you install an uninterruptable power source (UPS) as a safeguard against power loss.

Power Distribution

The router chassis backplane distributes -48 VDC power throughout the router and to all cards in the card cages.

All cards have multiple DC-DC converters that convert the -48 VDC into +2.5 VDC, +3.3 VDC, +5 VDC, and other voltages as required by the line card. The DC-DC converters are turned on by the MBus modules under the control of the route processor and MBus software.

Power for the blower module is supplied directly from the backplane through a connector in the PDU that passes DC voltage from the backplane to the blower module. An blower module controller card in the blower module converts –48 VDC into DC voltage that powers the blower module fans.

Caution To ensure that the chassis configuration complies with the required power budgets, use the on-line power calculator. Failure to properly verify the configuration may result in an unpredictable state if one of the power units fails. Contact your local sales representative for assistance.

Blower Module

The Cisco XR 12406 Router is equipped with a blower module to distribute air within the chassis. The blower module is located on the rear of the chassis (see Figure 1-3). The blower module draws room air into the chassis through two air filters on the side of the chassis, pulls the air through the chassis card cages, and expels it through exhaust vents on the back of the blower module (Figure 1-17).

Caution Exhaust from other equipment vented directly into the router air inlet may cause overheating. The front, back, and sides of the router must remain unobstructed to ensure adequate air flow and prevent overheating inside the chassis. Allow sufficient air flow by maintaining 6 inches (15.24 cm) of clearance at both the inlet and exhaust openings on the chassis.

If the air temperature inside the route processor and line card cage rises, the system environmental monitor shuts down all internal power to prevent equipment damage from excessive heat.

If the system detects that one of three fans within a blower module has failed, it displays a warning message on the console screen. If multiple fans fail, the system shuts down to prevent equipment damage.

Figure 1-17 Internal Air Flow—Top View

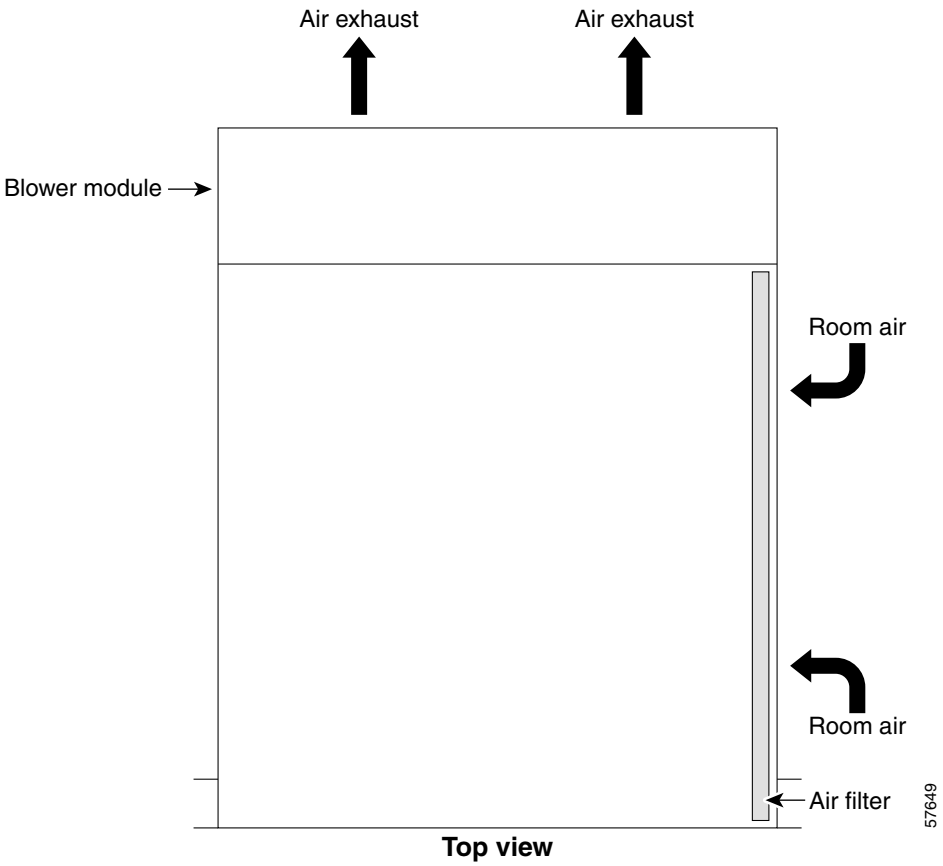

The two LEDs on the blower module provide a visual indication of blower module status. Both LEDs are visible on the blower module from the rear of the chassis.

- OK—Left LED; Green. When on, this LED indicates that the blower module is operating normally. This LED should come on as soon as the blower module is installed and receives power from the backplane connector.
- Fail—Right LED; Red. The red LED should remain off during normal operation. If the red LED is on, the system has detected a fan failure or other fault in the blower module. Replace the existing blower module with a spare.

Chassis Backplane and Maintenance Bus

All of the card cages for the Cisco XR 12406 Router are tied together electrically through a passive system backplane in the back of the chassis. Nearly all of the wiring and circuitry in the chassis is contained within or connected to the chassis backplane. The chassis backplane distributes DC power to all of the cards in the chassis as well as the blower module, and provides the physical communication pathway between cards, both for network data and system communication across the internal system maintenance bus (MBus).

The maintenance bus and MBus modules manage the maintenance functions of the system. The MBus is integrated into the backplane and consists of two separate buses, providing MBus redundancy.

Both MBus networks are linked to all the following items:

- Route processor and line cards
- CSCs, SFCs, and alarm cards
- Power modules
- Blower module

The MBus module located on each component communicates over the MBus and is powered by DC voltage directly from the alarm card. The MBus performs the functions of power-up/down control for each component, component (device) discovery, code download, diagnostics, and environmental monitoring and alarms.

Power-on and Power-off Control

Each MBus module directly controls the DC-DC converters on the component on which it is mounted, based on commands the component receives from its on-board EPROM and from the route processor. Each MBus module is tied directly to DC voltage from the alarm card.

When power is applied to the router, all MBus modules immediately power on. The MBus modules on the route processor and CSC immediately turn on the DC-DC converter, powering up the respective card. The line card MBus module waits to power on the line card until it receives a command from the route processor.

Device Discovery

The route processor uses the MBus to detect the system configuration. The route processor sends a message over the MBus requesting identity information from all installed devices. The responses provide component type, as well as slot numbers for the line cards, CSCs, SFCs, and alarm cards.

Code Download

A portion of the line card operating software can be downloaded from the route processor to the line card over the MBus. Because the MBus is relatively slow compared to the switch fabric, only enough code is downloaded to the line card for it to access the switch fabric and complete the download process.

Diagnostics

The diagnostic software image is downloaded from the route processor to the line card during the test sequence.

Environmental Monitoring and Alarms

The MBus module on each component monitors the environment of that component as follows:

- Line cards and the route processor are monitored for temperature by two temperature sensors mounted on each card. The MBus module makes voltage adjustments through software for the +2.5 VDC, +3.3 VDC, and +5 VDC DC-DC converters.
- Clock and scheduler cards and switch fabric cards are monitored for temperature by two temperature sensors mounted on each card. The MBus module makes voltage adjustments through software for the +2.5 VDC and +3.3 VDC converters.
- The MBus module on the alarm card makes voltage adjustments for +5 VDC.
- Environmental monitoring includes voltage monitoring, temperature monitoring, and sensing for the blower module fans.

Air Filters

The Cisco XR 12406 Router is equipped with two user-serviceable air filters (Figure 1-18).

Figure 1-18 Air Filter Locations

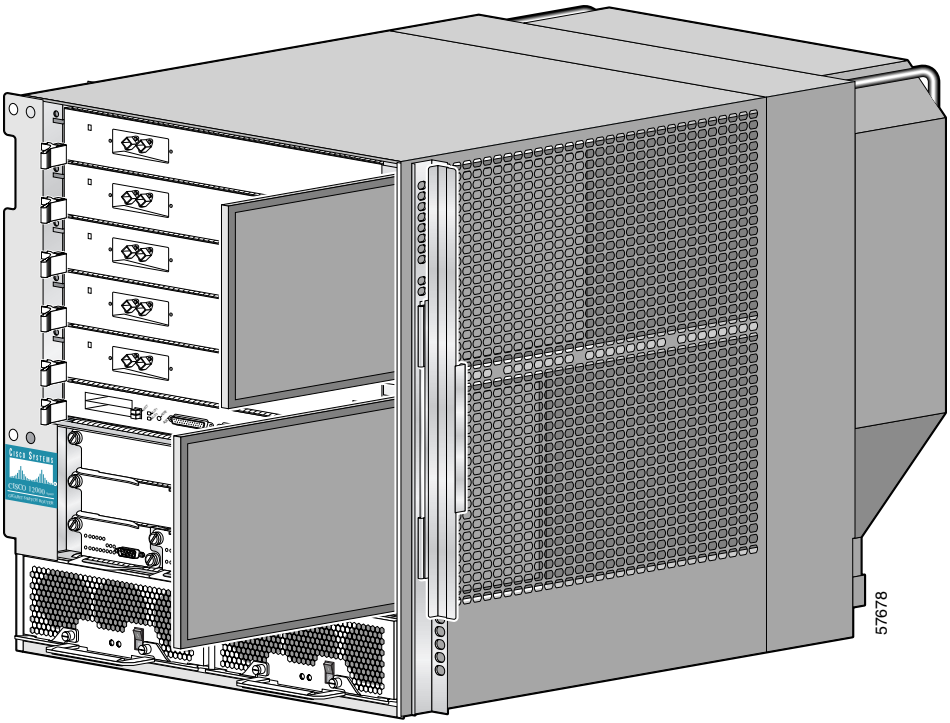

The air filters are located on the right of the front side of the chassis. The air filters are housed behind a door that is spring-loaded in the closed position.

Caution Air filters should be clean when the router is operating. Inspect and clean the air filters once a month, more often in dusty environments.

Do not run the router without the air filters installed. You should inspect and clean the air filters once a month, more often in dusty environments.

Cable-Management System

The Cisco XR 12406 Router cable-management system organizes the interface cables entering and exiting the system, keeping them free of sharp bends and out of the way.

Caution Excessive bending in an interface cable can degrade performance.

The cable-management system (Figure 1-19) consists of the following components:

- One vertical cable-management bracket on the chassis
- One line card cable-management bracket on each line card

When you face the front of the router chassis, the chassis cable-management bracket is installed on the left side of the chassis, adjacent to the line card and route processor card cage. The chassis cable-management bracket organizes the line card and route processor cables to keep them from binding, and it eliminates interference when access to the front of the chassis is necessary for maintenance and reading the LEDs.

A line card cable-management bracket attaches to each line card with captive screws. Cable ties on the bracket hold the network interface cables in place, keep the cables organized relative to their assigned connectors, and manage the bend radius of each cable as it enters the connector on the line card.

On line cards with multiple ports, the line card cable-management bracket keeps the network interface cables organized when your remove and replace the line card. You can unplug the network interface cables from their connectors on the line cards and leave the cables bundled in the line card cable-management bracket while you remove the bracket from the line card. That way, when you replace the line card, the network interface cables are already aligned with the correct line card cable connectors.

Figure 1-19 Chassis Cable-Management System

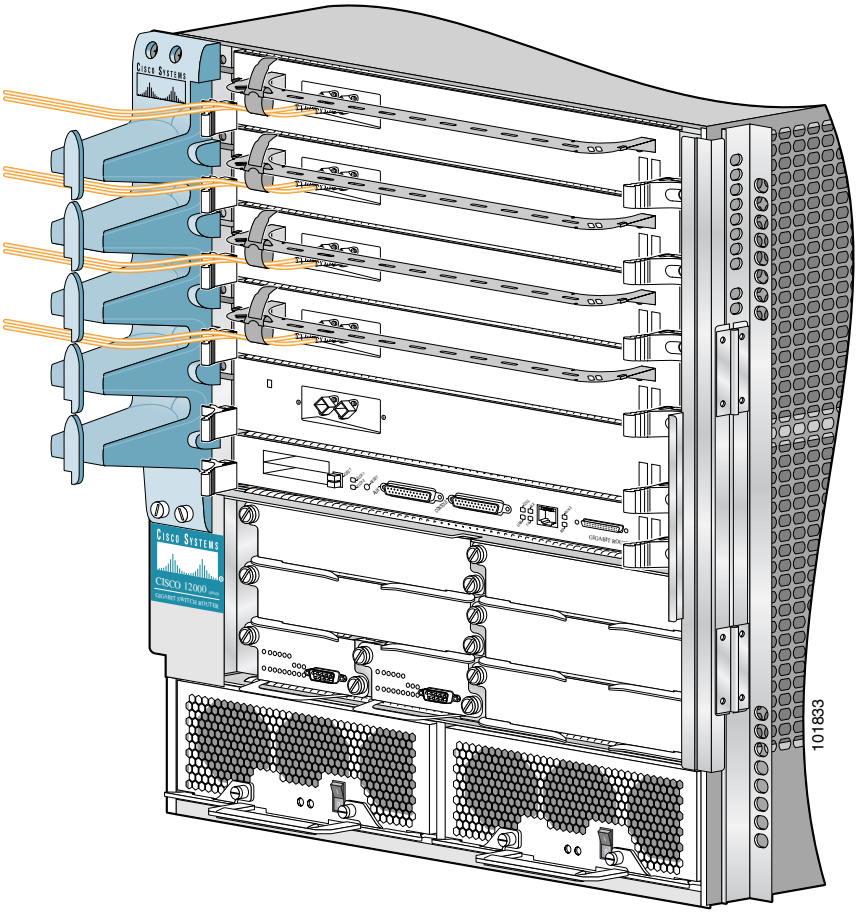

Figure 1-20 Chassis Cable Management System (with PRP-3 Installed)

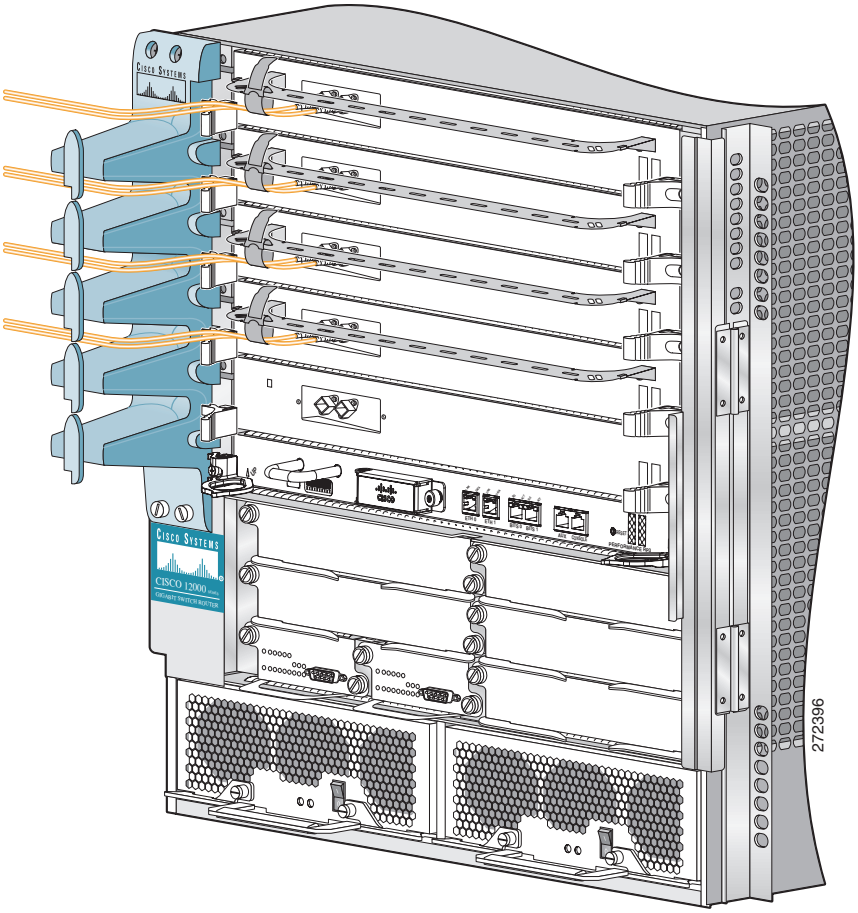

Field-Replaceable Units

The field-replaceable units (FRUs) for the Cisco XR 12406 Router include the following units:

Note For information on ordering FRUs, contact a customer service representative (see the section titled Obtaining Documentation and Submitting a Service Request, page -xii).

- Route processor
- Line cards
- CSCs
- SFCs
- Alarm cards
- PDU:
  - For AC powered systems, AC PDU
  - For DC-powered systems, DC PDU
- Power modules:
  - For AC-powered systems, AC-input power supplies
  - For DC-powered systems, DC-input PEMs
- AC power cords (for AC powered systems)
- Blower module
- Air filters
- Chassis cable-management bracket

Upgrading a Cisco 12000 Series Internet Router to a Cisco XR 12000 Series Router

A Cisco XR 12000 Series Router can be upgraded to a Cisco XR 12406 Router by updating the line cards and software images. For information on this process, including supported line cards and software upgrade procedures, please refer to the Cisco document, *Upgrading a Cisco 12000 Series Router from Cisco IOS Software to Cisco IOS XR Software*.

Technical Specifications

For technical specifications and compliance information for the Cisco XR 12406 Router, see Appendix A, "Cisco XR 12406 Router Technical Specifications and Warnings."