CHAPTER 3

Installing the Router

This chapter describes how to install a Cisco XR 12404 Router. It includes the following sections:

- Installing a Cisco XR 12404 Router, page 3-2
- Connecting RP and Line Card Cables, page 3-12
- Connecting to the Console Port and Auxiliary Ports, page 3-15
- Connecting to an AC Power Source, page 3-24
- Connecting to a DC Power Source, page 3-26
- Powering on the Router for the First Time, page 3-29
- External Network Interface, page 3-33
- Manually Booting the System, page 3-33

Required Tools

You need the following items to install the Cisco XR 12404 Router:

- Number 2 Phillips screwdriver
- Small flat-bladed screwdriver
- Tape measure (optional)
- Level (optional)

Installing a Cisco XR 12404 Router

This section provides the procedures for installing the Cisco XR 12404 Router in a rack or on a flat surface. It contains the following procedures:

- Installing the Rack-Mounting Brackets—Optional
- Installing the Chassis in a Rack
- Installing the Chassis on a Tabletop or Flat Surface
- Installing the Chassis on a Tabletop or Flat Surface

Your installation site should already be prepared before you begin installing the router. For complete information about site preparation see Chapter 2, “Preparing for Installation.”

Make sure that you have considered the following before you install the router:

- Mounted at the left side of the chassis is the fan tray, the exhaust vents should not be blocked.
- Facing the rear of the router, mounted on the left side is the air filter; air flow to the air filter should not be blocked.
- 24 inches (61 centimeters) of clearance in front of the chassis may be needed for working with line cards, attaching Network Interface Cables (NICs), the CSF or the RP.
- Location is temperature-controlled, air-conditioned and dust-free.
- Power cables and power supplies have been checked for compatibility with your power service.

- Labels on the equipment have been checked to ensure that the power service at your site is suitable for the Cisco XR 12404 Router.
- AC and DC power source voltage receptacles are easy to reach.

Installing the Rack-Mounting Brackets—Optional

The rack-mounting brackets temporarily bear the weight of the router while it is being positioned in the rack.

While the use of the rack-mounting is optional, installing them makes it much easier to mount the router in a rack, and also ensures that the router is level. The rack-mounting brackets can be left in place following the router installation.

Warning **Two or more people should install the router to minimize the risk of personal injury and damage to the equipment.**

Refer to Figure 3-1 and use the following procedure to install the rack-mounting brackets.

Step 1 Measure and mark the hole at the same height on both the left and right rack rails.

Step 2 Hold the right bracket against the right mounting rail and align the bottom screw hole in the bracket with the marked screw hole.

Step 3 While supporting the bracket against the mounting rail with one hand, use the other hand to insert a screw through a hole in the rack-mounting bracket.

Step 4 Finger-tighten the screw.

Step 5 Insert a second screw in the top hole in the bracket and finger tighten the screw.

Step 6 Mount the left rack-mounting bracket the same as you mounted the right bracket.

Step 7 Measure the two brackets to ensure they are positioned at the same height.

Step 8 Use a level to ensure the tops of the two brackets are level, or use a measuring tape to ensure that each bracket is the same distance from the top of both rack rails.

Step 9 Use a screwdriver to tighten all the screws (Figure 3-1).

Figure 3-1 Rack-Mounting Brackets

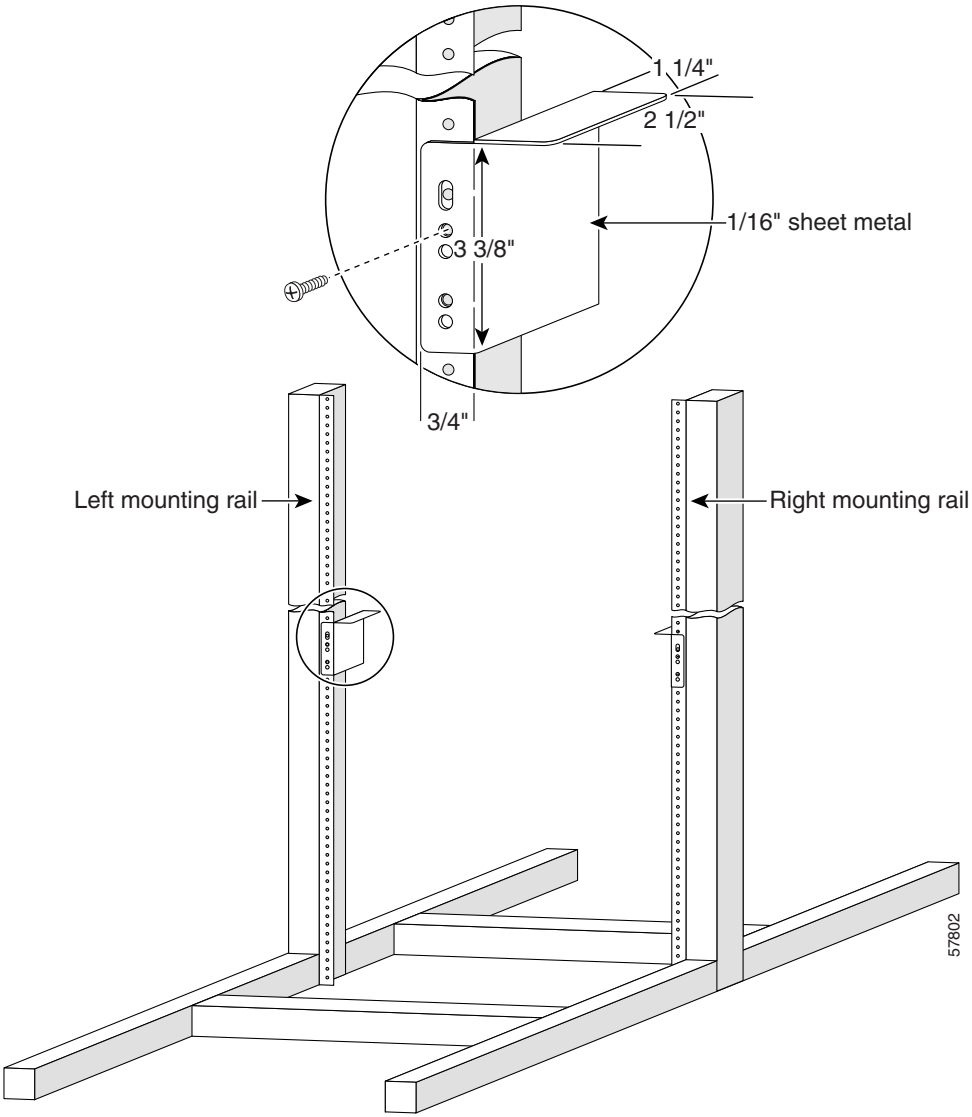

Installing the Center-Mounting Brackets—Optional

If you plan to install the Cisco XR 12404 Router in the center-mounting position, you must first install the center-mounting brackets on the equipment rack rails, then secure the chassis to the center-mounting brackets. If you do not plan to use the optional center-mounting brackets, proceed directly to the "Installing the Chassis in a Rack" section on page 3-7.

The optional center-mounting bracket installation kit ships in an accessories box included in the Cisco XR 12404 Router shipping container.

Refer to Figure 3-2 and use the following procedure to install the optional center-mounting brackets.

Step 1 Measure and mark the hole at the same height on both the left and right posts.

Step 2 Hold the right bracket against the right rack rail and align the bottom screw hole in the bracket with the marked screw hole.

Step 3 While supporting the bracket against the rack rail with one hand, use the other hand to insert a screw through a hole in the center-mounting bracket that aligns with a hole on the rack rail.

Step 4 Use your fingers to tighten the screw.

Step 5 Insert a second screw in the top hole in the bracket and finger tighten the screw.

Step 6 Use a screwdriver to tighten all the screws.

Step 7 Mount the left center-mounting bracket so that it is at the same height as the right bracket.

Step 8 Use a level to ensure the two brackets are level; or use a measuring tape to ensure the both center-mounting brackets are the same distance from the top of both rack mounting rails.

Step 9 Use a screwdriver to tighten all the screws.

Figure 3-2 Center-Mounting Brackets

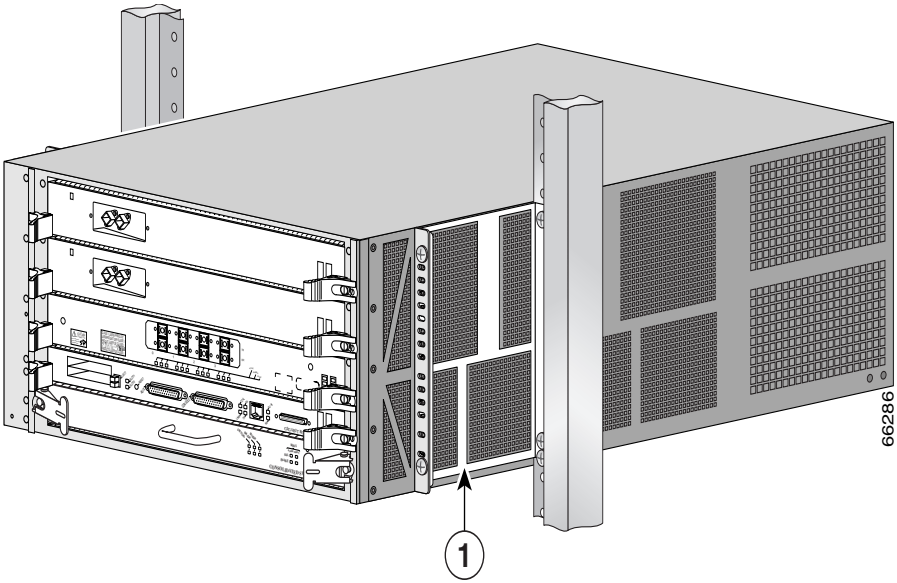

Figure 3-3 Center-Mounting Brackets (with PRP-3 installed)

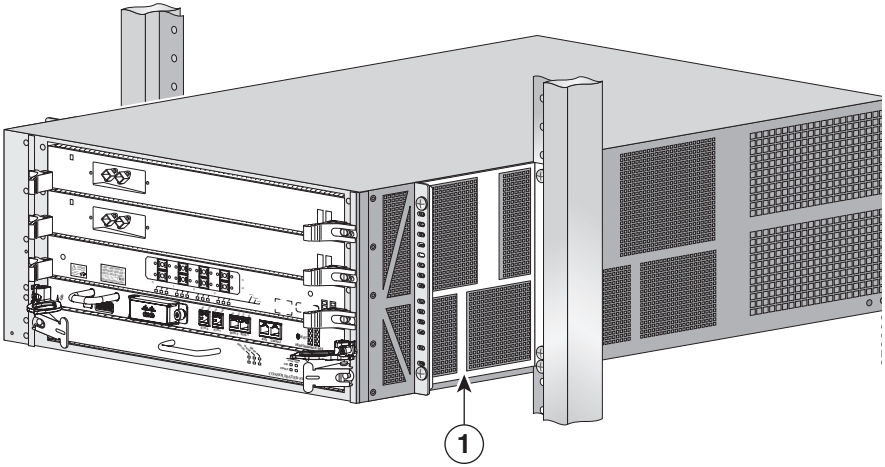

Installing the Chassis in a Rack

Use the following procedure to install the Cisco XR 12404 Router in a rack.

Warning **Two or more people should install the router to minimize the risk of personal injury and damage to the equipment.**

Step 1 Move the router as close to the installation location as possible without interfering with the installation process.

Step 2 With one person lifting from the front and one from the rear of the chassis, lift the chassis off the pallet and position the chassis in the rack.

Note A third person might be needed to assist in lifting and positioning the chassis in the rack, or to install the screws once the chassis is in position.

Step 3 Install the screws to secure the chassis to the rack

a. Look at the bottom mounting holes on the chassis. Align one of the holes with a mounting hole in the rack.

b. Install one of the mounting screws provided.

c. On the other side of the chassis adjust the position of the chassis so that the same mounting hole in the bottom group of mounting holes is aligned with a hole in the rack.

d. Install one of the mounting screws provided.

Step 4 Repeat Step 3a through Step 3d for additional mounting holes.

Step 5 Use a screwdriver to tighten all the screws.

Installing the Chassis on a Tabletop or Flat Surface

Use the following procedure to install the Cisco XR 12404 Router on a tabletop or other stable flat surface.

Step 1 Move the router as close to the installation location as possible.

Step 2 With one person positioned at the front and rear of the chassis, lift the chassis off of the pallet and position the chassis on the flat surface.

Step 3 Secure the chassis to the flat surface to ensure it does not fall off.

You can use the same mounting hardware that secured your router to the shipping pallet to secure the chassis to the flat surface.

Supplemental Bonding and Grounding Connections

Before you connect power or turn on your Cisco XR 12404 Router, you must provide an adequate system ground for the router. The equipment grounding should be in accordance with local and national electrical codes.

If you are not installing the Cisco XR 12404 Router in a NEBS environment, you can choose to bypass these guidelines and rely on the safety earth ground connection supplied via the 5-15 15A North American plug to the AC-powered PEMs, and the main terminal block ground connection for DC-powered PEMs.

- On Cisco XR 12404 Routers configured for AC-input operation, the AC PDU is equipped with a three-wire electrical grounding-type connector that accept three-wire, grounding-type AC power cords such as the power cords shipped with the router. This is a safety feature.

- On Cisco XR 12404 Routers configured for DC-input operation, the DC PDU is equipped with a DC power connector block with wire-connection terminals for connecting the negative lead (top terminal), the positive lead (middle terminal), and the ground lead (bottom terminal). This is a safety feature.

Note Cisco XR 12404 Router grounding architecture conforms to the DC-I (DC-isolated) method of grounding as described in Telcordia GR-1089-CORE. A DC-I architecture means that there is no connection between the DC return terminal and the frame ground. DC return and frame ground are isolated from one another at the router.

If the router is installed in a NEBS environment, we strongly recommend that you connect the central office ground system or interior equipment grounding system to the supplemental bonding and grounding point on the router chassis. This grounding point consists of threaded inserts is located on the side of the chassis near the back of the chassis (see Figure 3-4). It is also referred to as the NEBS bonding and grounding receptacle, and is intended to satisfy the Telcordia NEBS requirements for supplemental bonding and grounding connections.

Figure 3-4 Supplemental Bonding and Grounding Port for NEBS Compliance

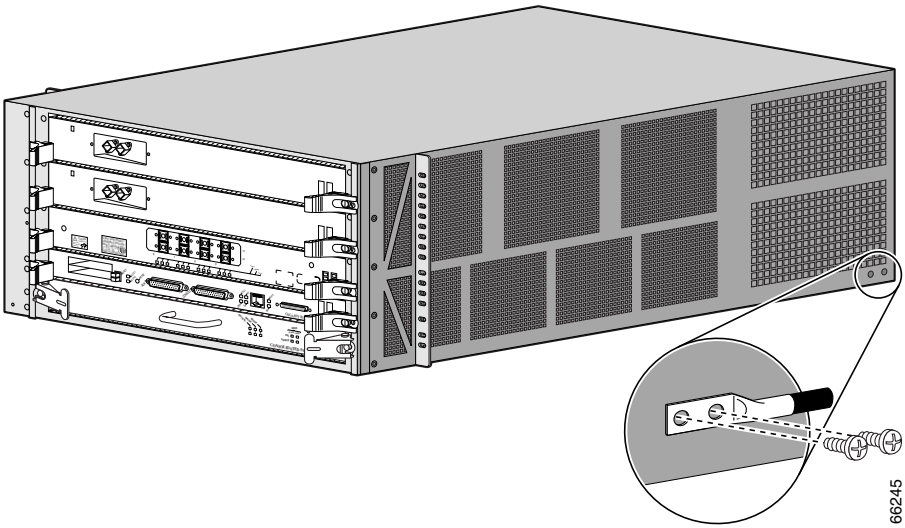

Figure 3-5 Supplemental Bonding and Grounding Port for NEBS Compliance (PRP-3 Installed)

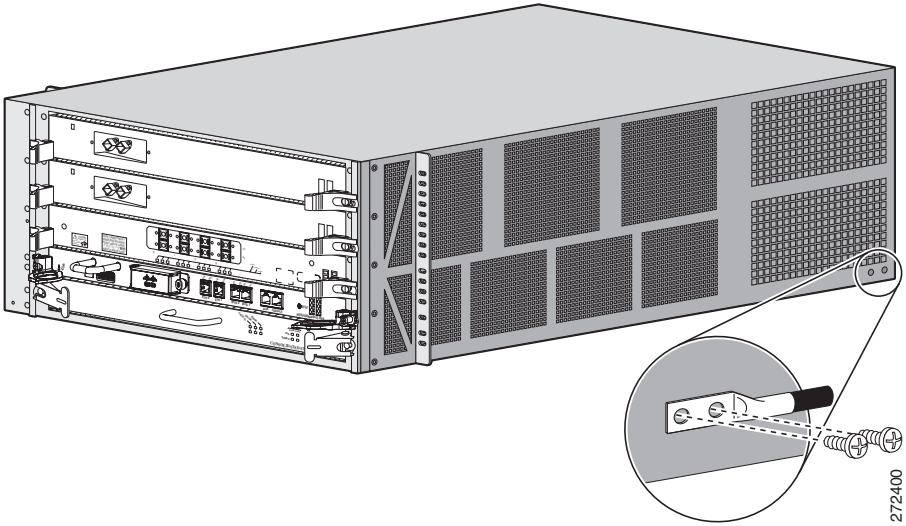

Use a cable lug with two holes at 0.63" (16 mm) centers to connect to the chassis with two 6.3 mm (M6) screws as shown in Figure 3-6. The lug can be ordered from Cisco (Part Number 32-0607-01).

Figure 3-6 Cable Lug

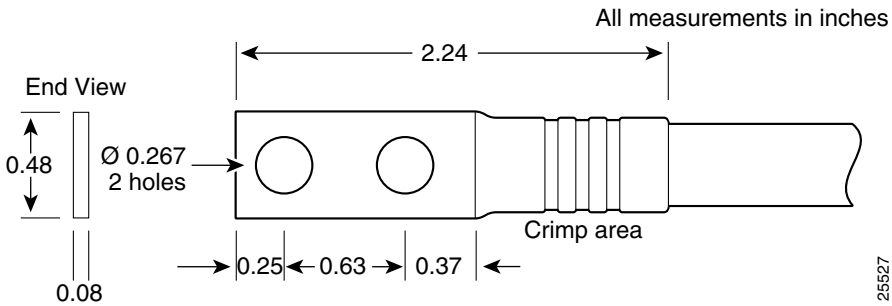

The dual-hole lug is crimped onto a grounding wire of a wire size and length determined by your router location and facility environment. The crimping tool shown in Figure 3-7 is a standard crimping tool obtainable from any normal hardware source.

Figure 3-7 Crimping the Lug

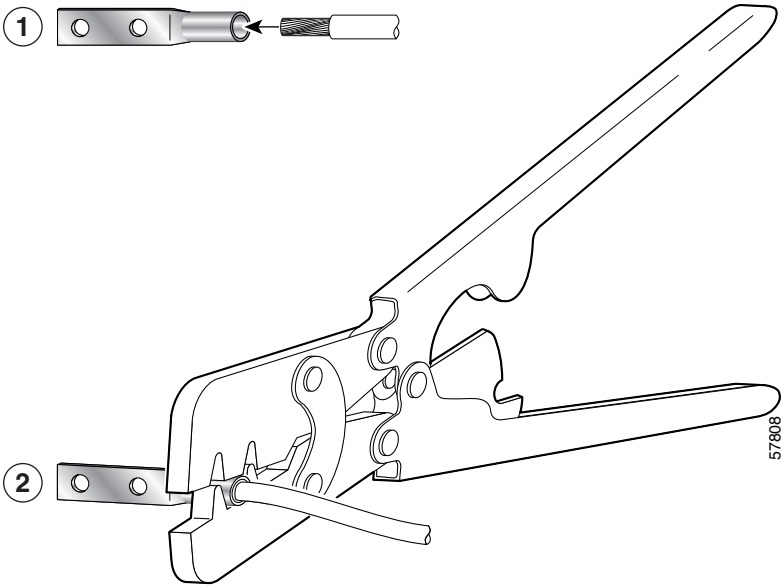

1	Place ground wire in the lug	**2**	Crimp the lug

Connecting RP and Line Card Cables

Use the following procedure to connect RP and line card cables to the router.

Step 1 Proceeding from left to right identify the network interface cable that connects to each card port.

Step 2 Connect the network interface cables:

a. Carefully route the identified cable through the cable-management tray and over to the card interface port; connect one cable at a time (Figure 3-8).

b. Proceeding from left to right carefully wrap the cables using the velcro straps.

Figure 3-8 RP and Line Card Cable-Management Brackets

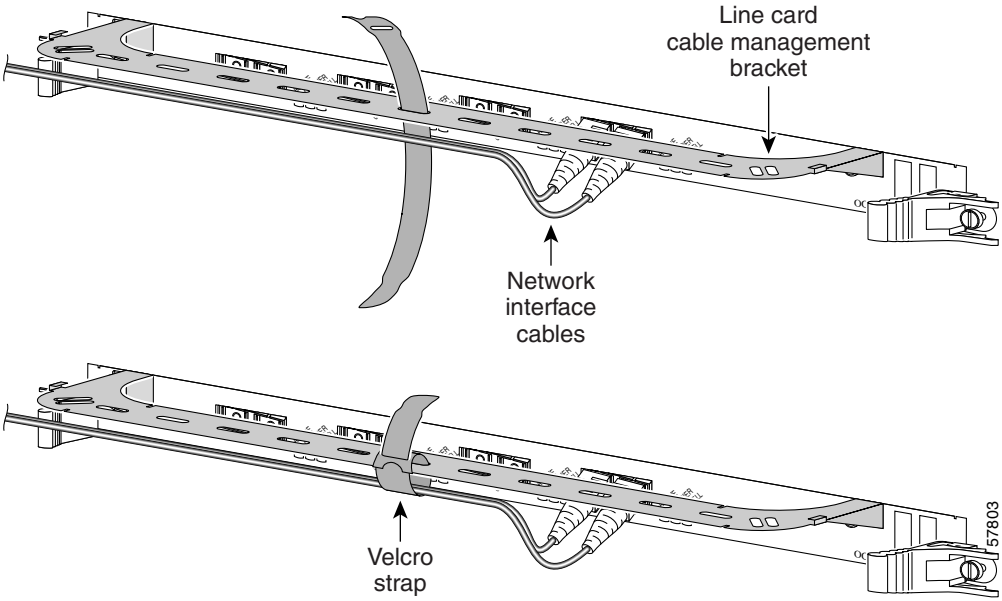

Caution Carefully adjust the interface cable in the RP or line card cable-management bracket to prevent any kinks or sharp bends in the interface cable. Kinks and sharp bends can destroy or degrade the ability of the optical fiber to propagate the signal-encoded beam of light accurately from one end of the cable to the other. Also, allow adequate strain relief in the interface cable.

Step 3 Route the cable to the chassis cable-management bracket mounted to the left side of the chassis (Figure 3-9).

- Use the screws packaged with the chassis cable management bracket kit.

Figure 3-9 Chassis Cable-Management Bracket

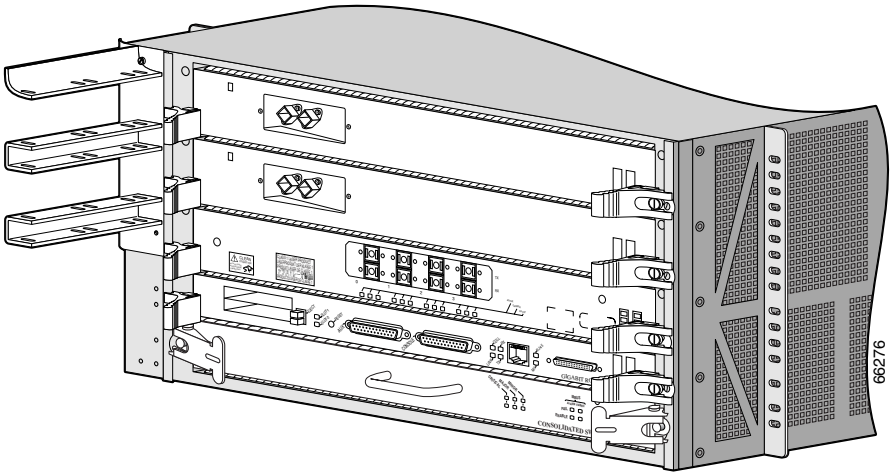

Figure 3-10 Chassis Cable Management Bracket with PRP-3

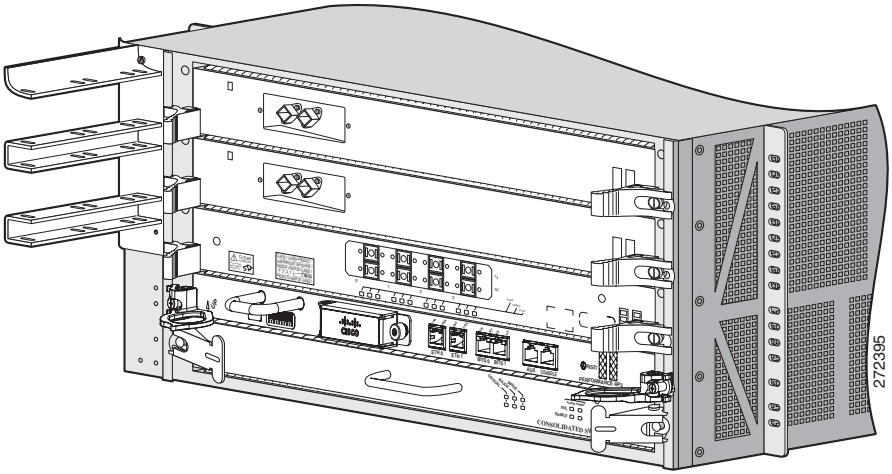

Connecting to the Console Port and Auxiliary Ports

This section provides the information to connect a console to the router. Both Data Set Ready (DSR) and Data Carrier Detect (DCD) signals are active when the system is running. The console port does not support modem control or hardware flow control. The console port requires a straight-through EIA/TIA-232 cable.

The system console port on the PRP is a DCE RJ-45 receptacle for connecting a data terminal, which you must configure. The console port is labeled *Console*, as shown in Figure 3-11.

Note To comply with Telcordia GR-1089 NEBS standard for electromagnetic compatibility and safety, connect all console, auxiliary, Ethernet, and BITS interfaces only to intrabuilding or non-exposed wiring or cabling. The intrabuilding cable must be shielded and the shield must be grounded at both ends.

Check your terminal's documentation to determine the baud rate of the terminal you plan to use. If your documentation does not specify settings use the following terminal settings:

1. Baud to 9600
2. Data bits to 8
3. Parity to no parity
4. Stop bits to 2

The console port requires a straight-through RJ-45 cable.

Figure 3-11 PRP Console and Auxiliary Port Connections

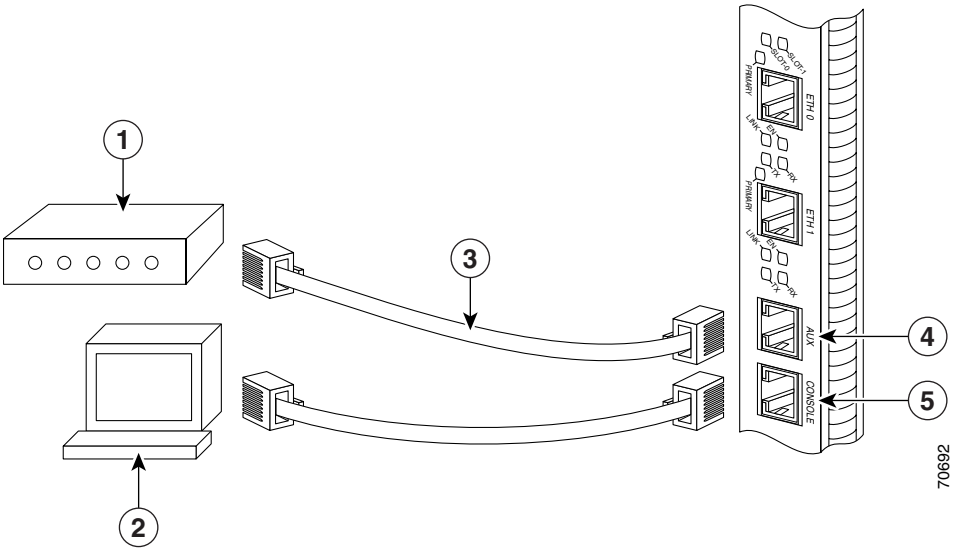

1	Modem	**4**	Auxiliary port
2	Console terminal	**5**	Console port
3	RJ-45 Ethernet cables		

Note The console and auxiliary ports are both asynchronous serial ports; any devices connected to these ports must be capable of asynchronous transmission. (Asynchronous is the most common type of serial device; for example, most modems are asynchronous devices.)

PRP Console Port Signals

The console port on the PRP is a DCE RJ-45 receptacle. Table 3-1 lists the signals used on this port.

Table 3-1 PRP Console Port Signals

Console Port Pin	Signal	Input/Output	Description
1[1]	—	—	—
2	DTR	Output	Data Terminal Ready
3	TxD	Output	Transmit Data
4	GND	—	Signal Ground
5	GND	—	Signal Ground
6	RxD	Input	Receive Data
7	DSR	Input	Data Set Ready
8[1]	—	—	—

1. These pins are not connected.

PRP Auxiliary Port Signals

The auxiliary port on the PRP is a DTE, RJ-45 plug for connecting a modem or other DCE device (such as a CSU/DSU or another router) to the router. The port is labeled *Aux*, as shown in Figure 3-11. The asynchronous auxiliary port supports hardware flow control and modem control. Table 3-2 lists the signals used on the auxiliary port.

Table 3-2 PRP Auxiliary Port Signals

Auxiliary Port Pin	Signal	Input/Output	Description
1	RTS	Output	Request To Send
2	DTR	Output	Data Terminal Ready
3	TxD	Output	Transmit Data
4	GND	—	Signal Ground
5	GND	—	Signal Ground
6	RxD	Input	Receive Data
7	DSR	Input	Data Set Ready
8	CTS	Input	Clear To Send

Installing a Flash Memory Card

By default, a Flash memory card containing a valid Cisco IOS XR software image is inserted in bottom slot, PCMCIA slot 0 before the router is shipped.

Note PCMCIA slot 0 is the bottom slot and slot 1 is the top slot. Both Flash memory card slots on each RP can be used at the same time.

The software configuration register is set to 0x0102, which causes the router to boot automatically from the Cisco IOS XR software image stored on the Flash memory card.

- The Flash memory card that shipped with your system is installed in the bottom slot, PCMCIA slot 0 of the RP (Figure 3-12).

Figure 3-12 Flash Memory Card Slots

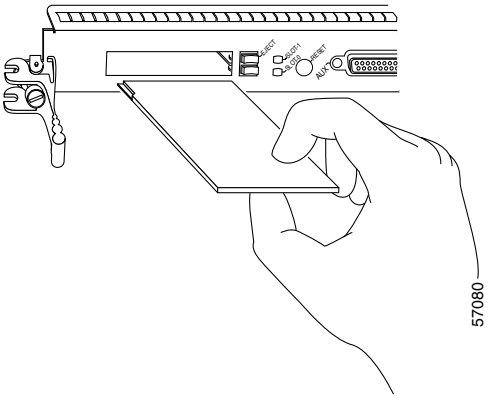

Figure 3-13 PRP-3 External CompactFlash

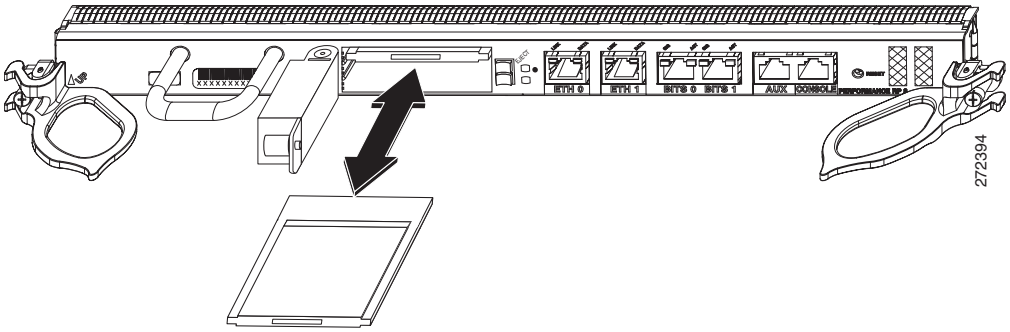

Ensure that a console terminal is connected to the RP console port and turned on, or that you have a remote login to the router from another device through a telnet session.

Connecting the PRP to an Ethernet Network

The PRP includes two 10/100 Mbps Ethernet ports, each using an 8-pin RJ-45 receptacle for either IEEE 802.3 10BASE-T (10 Mbps) or IEEE 802.3u 100BASE-TX (100 Mbps) connections. The transmission speed of the Ethernet ports is auto-sensing by default and is user configurable.

To connect cables to the PRP Ethernet interfaces (ports labeled ETH0 and ETH1), attach the Category 5 UTP cable directly to a RJ-45 receptacle on the PRP.

Note The Ethernet interfaces on the PRP are end-station devices, not repeaters; therefore, you *must* connect an Ethernet interface to a repeater or hub.

RJ-45 cables are not available from Cisco Systems, but are available from outside commercial cable vendors.

Note Only connect cables that comply with EIA/TIA-568 standards. See Table 3-4 and Table 3-5 for cable recommendations and specifications.

Note To comply with Telcordia GR-1089 NEBS standard for electromagnetic compatibility and safety, connect all console, auxiliary, and Ethernet interfaces only to intrabuilding or non-exposed wiring or cabling. The intrabuilding cable must be shielded and the shield must be grounded at both ends.

Caution The Ethernet ports are primarily used as a Telnet port into the Cisco XR 12000 Series Router, and for booting or accessing Cisco IOS XR software images over a network to which an Ethernet port is directly connected. Cisco Express

Forwarding (CEF) functions are switched off by default for security reasons. Cisco strongly cautions you to consider the security implications of switching on CEF routing functions on these ports.

Figure 3-14 is an example of the functionality of an Ethernet port. In this example, you cannot access Network 2.0.0.0 through the Ethernet port (ETH0) on the PRP in router A; you can only access the hosts and router C, which are in Network 1.0.0.0 (see dotted arrows in Figure 3-14).

To access Network 2.0.0.0 from router A, you must use an interface port on one of your line cards (in this example, a Packet-over-SONET (POS) line card in router A) to go through router B, through router C, and into Network 2.0.0.0 (see solid arrows in Figure 3-14).

Figure 3-14 Using the Ethernet Port on the PRP

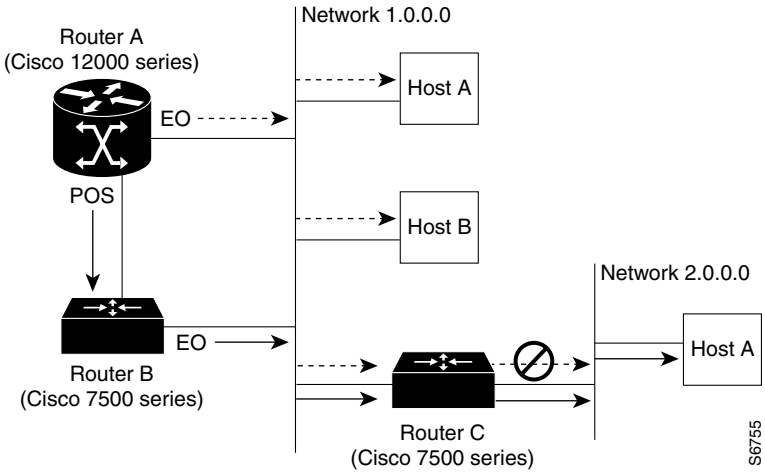

PRP Ethernet Connections

Figure 3-15 shows a PRP RJ-45 receptacle and cable connectors. The RJ-45 connection does not require an external transceiver. The RJ-45 connection requires Category 5 unshielded twisted-pair (UTP) cables, which are not available from Cisco Systems, but are available from commercial cable vendors. Table 3-3 lists the port pinouts for the RJ-45 receptacle.

Figure 3-15 RJ-45 Receptacle and Plug (Horizontal Orientation)

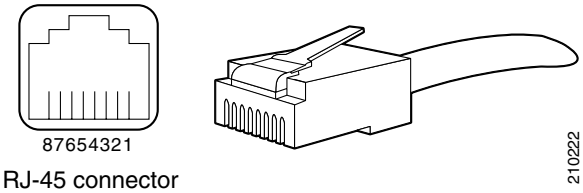

Warning **The ports labeled Ethernet, 10BASE-T, Token Ring, Console, and AUX are safety extra-low voltage (SELV) circuits. SELV circuits should only be connected to other SELV circuits. Because the BRI circuits are treated like telephone-network voltage, avoid connecting the SELV circuit to the telephone network voltage (TNV) circuits.**

Table 3-3 PRP RJ-45 Ethernet Receptacle Pinout

Ethernet Port Pin	Signal	Description
1	TxD+	Transmit data +
2	TxD–	Transmit data –
3	RxD+	Receive data +
4	Termination Network	No connection
5	Termination Network	No connection
6	RxD–	Receive data –
7	Termination Network	No connection
8	Termination Network	No connection

Depending on your RJ-45 cabling requirements, use the cable pinouts shown in Figure 3-16 or Figure 3-17.

Figure 3-16 Straight-Through Cable Pinout—Connecting MDI Ethernet Port to MDI-X Wiring

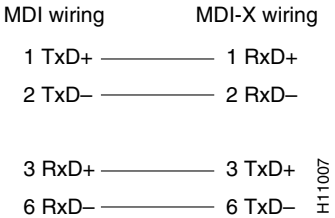

Figure 3-17 Crossover Cable Pinout (for Connecting Two PRPs)

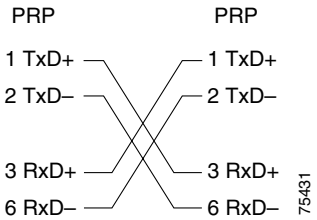

Table 3-4 lists the cabling specifications for 100-Mbps transmission over unshielded twisted-pair (UTP) cables.

Note The transmission speed of the Ethernet ports is auto-sensing by default and is user configurable.

Table 3-4 Specifications and Connection Limits for 100-Mbps Transmission

Parameter	RJ-45
Cable specification	Category 5[1] UTP, 22 to 24 AWG[2]
Cable length (max)	—
Segment length (max)	328 feet (100 m) for 100BASE-TX
Network length (max)	656 feet (200 m)[3] (with 1 repeater)

1. EIA/TIA-568 or EIA-TIA-568 TSB-36 compliant. Not supplied by Cisco.
2. AWG = American Wire Gauge. This gauge is specified by the EIA/TIA-568 standard.

3. This length is specifically between any two stations on a repeated segment.

Table 3-5 lists IEEE 802.3u physical characteristics for 100BASE-TX.

Table 3-5 IEEE 802.3u Physical Characteristics

Parameter	100BASE-TX
Data rate (Mbps)	100
Signaling method	Baseband
Maximum segment length	100 m between DTE[1] and repeaters
Media	Category 5 UTP (for RJ-45)
Topology	Star/Hub

1. DTE = data terminal equipment.

Connecting to an AC Power Source

This section provides the procedure for connecting your router to an AC power source. A power factor corrector (PFC) allows the AC-input power supply to accept AC power source voltage from an AC power source operating between 100-120 VAC, 15-Amp service in North America; and a range of 185-264 VAC, 10-Amp service in an international environment.

Caution The AC PEM weighs 14.0 pounds (6.35 kg.). Use two hands when handling a PEM.

Step 1 Attach an ESD-preventive strap to yourself and to either the chassis, or to a bare metal surface.

Step 2 Using two hands to support and guide the PEM, slide it into the PEM bay. Push the PEM all the way into the bay until the PEM connector engages the backplane connector.

Step 3 Tighten the captive screws on the PEM faceplate (Figure 3-18).

Figure 3-18 AC PEM

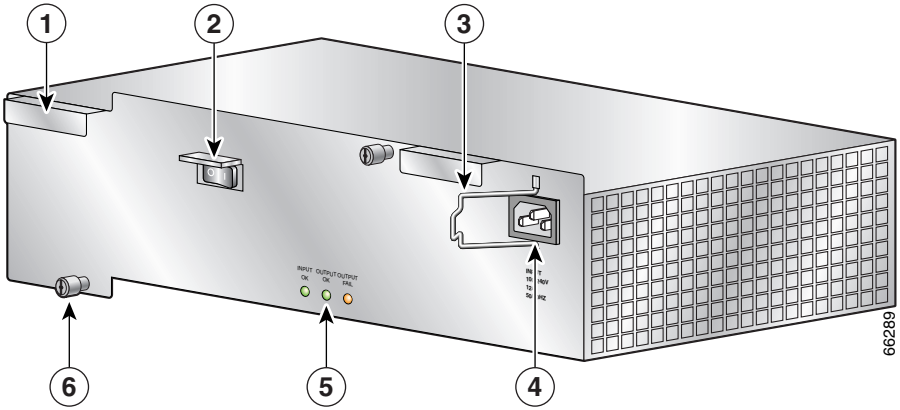

1	AC PEM handle	**4**	Power cord receptacle
2	On/Off switch	**5**	LEDs
3	Bail latch	**6**	Captive screws

- All electrical connections between the power supply and the backplane are made automatically when the power supply is fully inserted in the power supply bay.

Step 4 Locate the AC power cord and remove it from its shipping packaging. Verify that the AC power cord shipped with the power supply is the correct type for your site.

Note If you have an incorrect type of power cord, contact your service representative for a replacement.

Step 5 Plug the AC power cord into the AC PEM.

Step 6 Connect the other end of the AC power cord to the AC power source outlet.

Note We recommend attaching each AC PEM to an independent power source for full redundancy. We also recommend that you use an uninterruptable power source (UPS) to protect against power failures at your site.

Note When operating your router on an AC power source, both PEM bays must have all AC PEMs installed to ensure compliance with regulatory EMI standards.

Connecting to a DC Power Source

Each DC PDU should be connected to separate DC sources using six threaded terminals. Two terminals for negative (source DC), two terminals for positive (source DC return), and two terminals for ground. The DC power cable leads should be 6 American Wiring Gauge (AWG) high strand count wire. The PEM accepts DC power source voltage from a dedicated 35–Amp service DC power source operating between -48 to -60 VDC.

Warning **Power to your router must be Off and all cables disconnected before you install the DC power assembly. The DC PDU and DC PEM when connected, is not a hot-swappable field replaceable unit.**

Note We recommend each DC PDU be connected to an independent power source for full redundancy. We also recommend that you use an uninterruptable power source (UPS) to protect against power failures at your site.

Caution The DC PEM and DC PDU assembly weighs 14.0 pounds (6.35 kg.). Use two hands when handling the power supply.

Use the following procedure to install the DC PEM and DC PDU in the router.

Step 1 Attach an ESD-preventive strap to yourself and to either the chassis, or to a bare metal surface.

Step 2 Insert the DC power module into the power module bay at the rear of the chassis (Figure 3-19).

Figure 3-19 DC Powered Cisco XR 12404 Router—Rear View

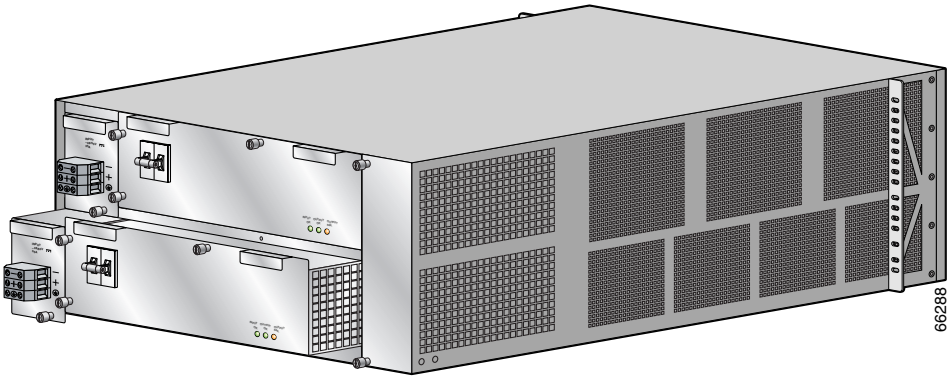

Step 3 Press the module against the backplane until the connectors are seated against the backplane receptacles.

Step 4 Tighten all of the captive screws on the faceplate.

All electrical connections between the power supply and the backplane happen automatically when the power supply is fully inserted in the power supply bay.

Step 5 Tighten the captive screws on the DC PDU.

Step 6 Secure each lead to the proper terminal port by tightening the terminal port connector screws with a 3/16-inch flat-blade screw driver (Figure 3-20).

Figure 3-20 DC PDU Power Block

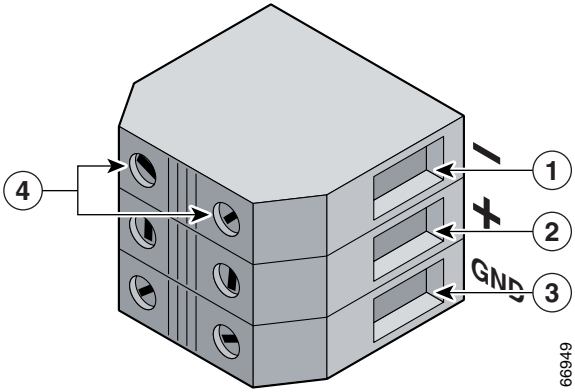

1	Negative Terminal Port	**3**	Ground Terminal Port
2	Positive Terminal Port	**4**	Terminal Port Connector Screws

Step 7 Verify that the DC power source circuit breaker servicing the DC PEM is switched on.

Powering on the Router for the First Time

Use the following procedure to power on the router for the first time.

Step 1 Check the following list *before* you power on the router:

- All cards are fully inserted in the card and CSF cage and all captive screws are tight

Caution Do not overtighten the captive screws on the cards you might strip the threads on the screw or in the insert in the component faceplate.

- Line card cable-management brackets are attached to their respective line cards
- Interface cables are routed neatly through the line card cable-management bracket
- Interface cables are completely seated in their line card connectors
- Interface cables are routed neatly through the chassis cable-management bracket
- PEMs are fully inserted in to each AC PEM bay or DC PDU and DC PEM bay
- PEM cables are securely connected to the PEM
- Power cables are securely connected to the PDU, the power source and are secured with appropriate strain relief.
- Empty card slots or card bays are filled with card blanks to ensure proper air flow through the chassis and electromagnetic compatibility (EMC)

Step 2 Power on the router by switching on all the circuit breakers and/or plug the power cord into an active power source that controls power to the router's AC PEM or DC power distribution unit (PDU).

Step 3 You should observe the following LED confirmation:

- AC PEMs—Verify the AC PEM LEDs are on and that the status is OK (Figure 3-21).

Figure 3-21 AC PEM LEDs

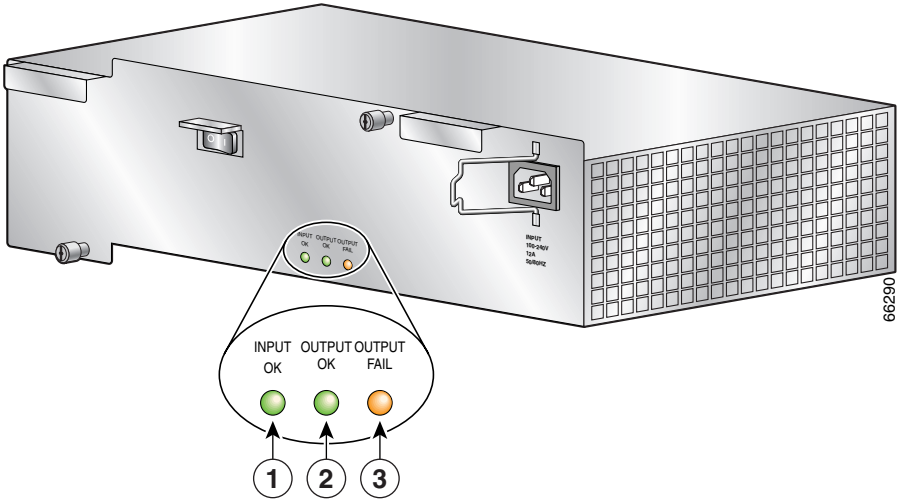

1	Input OK	Green	AC is present and within specified limits
2	Output OK	Green	Power supply module is operating normally in a powered up condition
3	Output Fail	Amber	Power module is operating in a fault condition and shutdown has occurred

- DC PEMs—Verify the DC PEM LEDs are on and that the status is OK (Figure 3-22).

Figure 3-22 DC PEM LEDs

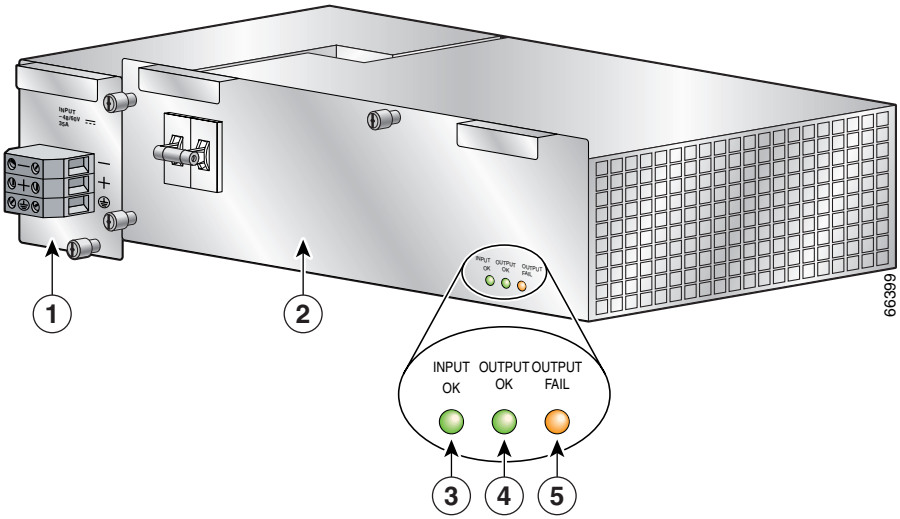

1	DC PDU	N/A	N/A
2	DC PEM	N/A	N/A
3	Input OK	Green	DC is present and within specified limits
4	Output OK	Green	Power supply module is operating normally in a powered up condition
5	Output Fail	Amber	Power module is operating in a fault condition and shutdown has occurred

- Visually check the CSF LEDs (Figure 3-23):

Figure 3-23 CSF LEDs

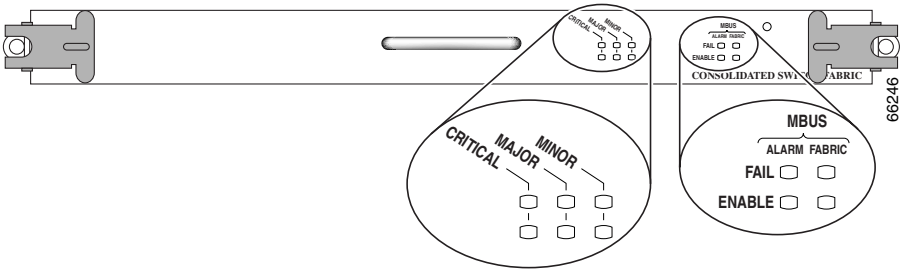

Table 3-6 CSF LEDs

Switch Fabric LEDs	Status	Condition
Critical	Off	Normally Off
Major	Off	Normally Off
Minor	Off	Normally Off

Table 3-7 CSF MBus Alarm LEDs

MBus Alarm LEDs	Status	Condition
Fail	Off	Normally Off
Enable	On	Normally On

Table 3-8 CSF MBus LEDs

MBus Fabric LEDs	Status	Condition
Fail	Off	Normally Off
Enable	On	Normally On

Step 4 On the console terminal, verify that the console displays the system banner and that the system and all interfaces initialize successfully.

If the router does not power on, or if any interfaces do not initialize properly, see Chapter 4, "Troubleshooting the Installation,". If you are still unable to resolve the problem, contact your Cisco service representative for assistance.

External Network Interface

After configuration, the RP and line cards can communicate with external networks.

You do not need to configure the network interfaces immediately, but you cannot connect to a network until you configure the interfaces for operation in your networking environment.

Note The interface-specific LEDs on the line cards go on when the line card interfaces are configured.

To verify correct operation of each line card interface, complete the first-time setup procedures and configuration, then check the status of the interfaces against the LED descriptions in the configuration notes for each line card.

If the system does not complete each of the boot process steps, go to "Chapter 4, "Troubleshooting the Installation."

Manually Booting the System

If your router does not find a valid system configuration image, or if you interrupt the boot sequence, the system might enter read-only memory (ROM) monitor mode and display the ROM monitor prompt (rommon>). From ROM monitor mode, you have access to a number of commands to locate and boot a valid system image.