Cisco Catalyst SD-WAN Segmentation Configuration Guide, Cisco IOS XE Catalyst SD-WAN Release 17.x

First Published: 2020-04-30

Last Modified: 2023-12-18

Americas Headquarters
Cisco Systems, Inc.
170 West Tasman Drive
San Jose, CA 95134-1706
USA
http://www.cisco.com
Tel: 408 526-4000
800 553-NETS (6387)
Fax: 408 527-0883

THE SPECIFICATIONS AND INFORMATION REGARDING THE PRODUCTS IN THIS MANUAL ARE SUBJECT TO CHANGE WITHOUT NOTICE. ALL STATEMENTS, INFORMATION, AND RECOMMENDATIONS IN THIS MANUAL ARE BELIEVED TO BE ACCURATE BUT ARE PRESENTED WITHOUT WARRANTY OF ANY KIND, EXPRESS OR IMPLIED. USERS MUST TAKE FULL RESPONSIBILITY FOR THEIR APPLICATION OF ANY PRODUCTS.

THE SOFTWARE LICENSE AND LIMITED WARRANTY FOR THE ACCOMPANYING PRODUCT ARE SET FORTH IN THE INFORMATION PACKET THAT SHIPPED WITH THE PRODUCT AND ARE INCORPORATED HEREIN BY THIS REFERENCE. IF YOU ARE UNABLE TO LOCATE THE SOFTWARE LICENSE OR LIMITED WARRANTY, CONTACT YOUR CISCO REPRESENTATIVE FOR A COPY.

The Cisco implementation of TCP header compression is an adaptation of a program developed by the University of California, Berkeley (UCB) as part of UCB's public domain version of the UNIX operating system. All rights reserved. Copyright © 1981, Regents of the University of California.

NOTWITHSTANDING ANY OTHER WARRANTY HEREIN, ALL DOCUMENT FILES AND SOFTWARE OF THESE SUPPLIERS ARE PROVIDED “AS IS" WITH ALL FAULTS. CISCO AND THE ABOVE-NAMED SUPPLIERS DISCLAIM ALL WARRANTIES, EXPRESSED OR IMPLIED, INCLUDING, WITHOUT LIMITATION, THOSE OF MERCHANTABILITY, FITNESS FOR A PARTICULAR PURPOSE AND NONINFRINGEMENT OR ARISING FROM A COURSE OF DEALING, USAGE, OR TRADE PRACTICE.

IN NO EVENT SHALL CISCO OR ITS SUPPLIERS BE LIABLE FOR ANY INDIRECT, SPECIAL, CONSEQUENTIAL, OR INCIDENTAL DAMAGES, INCLUDING, WITHOUT LIMITATION, LOST PROFITS OR LOSS OR DAMAGE TO DATA ARISING OUT OF THE USE OR INABILITY TO USE THIS MANUAL, EVEN IF CISCO OR ITS SUPPLIERS HAVE BEEN ADVISED OF THE POSSIBILITY OF SUCH DAMAGES.

Any Internet Protocol (IP) addresses and phone numbers used in this document are not intended to be actual addresses and phone numbers. Any examples, command display output, network topology diagrams, and other figures included in the document are shown for illustrative purposes only. Any use of actual IP addresses or phone numbers in illustrative content is unintentional and coincidental.

All printed copies and duplicate soft copies of this document are considered uncontrolled. See the current online version for the latest version.

Cisco has more than 200 offices worldwide. Addresses and phone numbers are listed on the Cisco website at www.cisco.com/go/offices.

Cisco and the Cisco logo are trademarks or registered trademarks of Cisco and/or its affiliates in the U.S. and other countries. To view a list of Cisco trademarks, go to this URL: https://www.cisco.com/c/en/us/about/legal/trademarks.html. Third-party trademarks mentioned are the property of their respective owners. The use of the word partner does not imply a partnership relationship between Cisco and any other company. (1721R)

© 2019–2023 Cisco Systems, Inc. All rights reserved.

CONTENTS

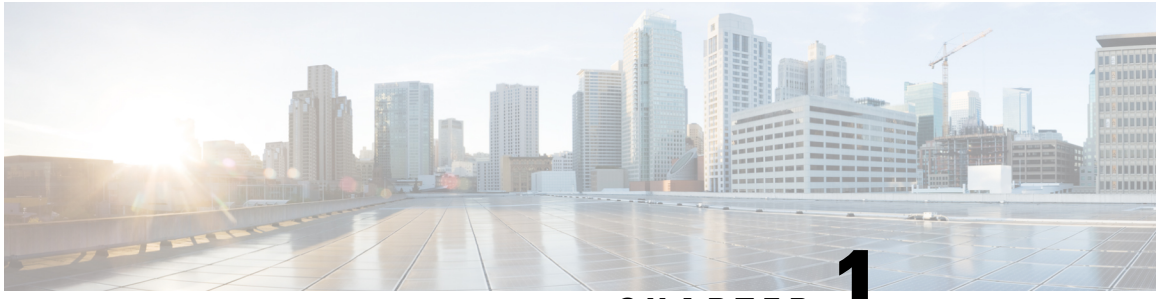

CHAPTER 1

Read Me First

Note To achieve simplification and consistency, the Cisco SD-WAN solution has been rebranded as Cisco Catalyst SD-WAN. In addition, from Cisco IOS XE SD-WAN Release 17.12.1a and Cisco Catalyst SD-WAN Release 20.12.1, the following component changes are applicable: **Cisco vManage** to **Cisco Catalyst SD-WAN Manager**, **Cisco vAnalytics** to **Cisco Catalyst SD-WAN Analytics**, **Cisco vBond** to **Cisco Catalyst SD-WAN Validator**, **Cisco vSmart** to **Cisco Catalyst SD-WAN Controller**, and **Cisco Controllers** to **Cisco Catalyst SD-WAN Control Components**. See the latest Release Notes for a comprehensive list of all the component brand name changes. While we transition to the new names, some inconsistencies might be present in the documentation set because of a phased approach to the user interface updates of the software product.

Related References

- Cisco Catalyst SD-WAN Control Components Compatibility Matrix and Server Recommendations
- Cisco Catalyst SD-WAN Device Compatibility

User Documentation

- User Documentation for Cisco IOS XE Catalyst SD-WAN Release 17

Communications, Services, and Additional Information

- Sign up for Cisco email newsletters and other communications at: Cisco Profile Manager.
- For information on the latest technical, advanced, and remote services to increase the operational reliability of your network visit Cisco Services.
- To browse and discover secure, validated enterprise-class apps, products, solutions, and services, visit Cisco Devnet.
- To obtain general networking, training, and certification titles from Cisco Press Publishers, visit Cisco Press.
- To find warranty information for a specific product or product family, visit Cisco Warranty Finder.
- To view open and resolved bugs for a release, access the Cisco Bug Search Tool.
- To submit a service request, visit Cisco Support.

Documentation Feedback

To provide feedback about Cisco technical documentation use the feedback form available in the right pane of every online document.

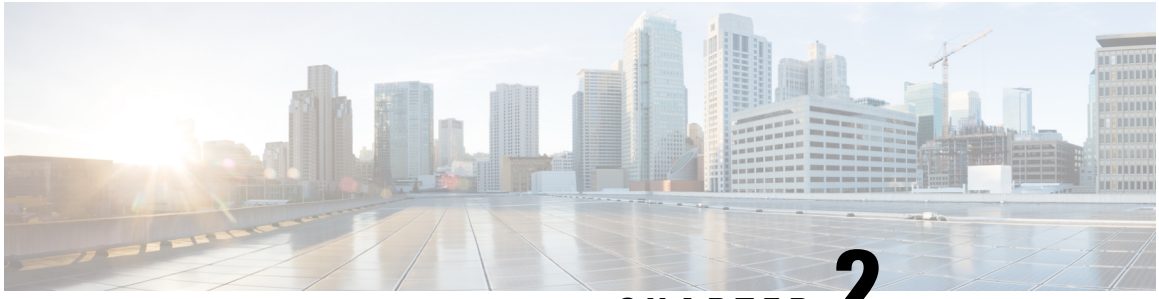

CHAPTER 2

What's New in Cisco IOS XE (SD-WAN)

Note To achieve simplification and consistency, the Cisco SD-WAN solution has been rebranded as Cisco Catalyst SD-WAN. In addition, from Cisco IOS XE SD-WAN Release 17.12.1a and Cisco Catalyst SD-WAN Release 20.12.1, the following component changes are applicable: **Cisco vManage** to **Cisco Catalyst SD-WAN Manager**, **Cisco vAnalytics** to **Cisco Catalyst SD-WAN Analytics**, **Cisco vBond** to **Cisco Catalyst SD-WAN Validator**, **Cisco vSmart** to **Cisco Catalyst SD-WAN Controller**, and **Cisco Controllers** to **Cisco Catalyst SD-WAN Control Components**. See the latest Release Notes for a comprehensive list of all the component brand name changes. While we transition to the new names, some inconsistencies might be present in the documentation set because of a phased approach to the user interface updates of the software product.

Note Cisco is constantly enhancing the Cisco Catalyst SD-WAN solution with every release and we try and keep the content in line with the latest enhancements. The following table lists new and modified features we documented in the Configuration, Command Reference, and Hardware Installation guides. For information on additional features and fixes that were committed to the Cisco Catalyst SD-WAN solution, see the *Resolved and Open Bugs* section in the Release Notes.

What's New in Cisco IOS XE Catalyst SD-WAN Release 17.x

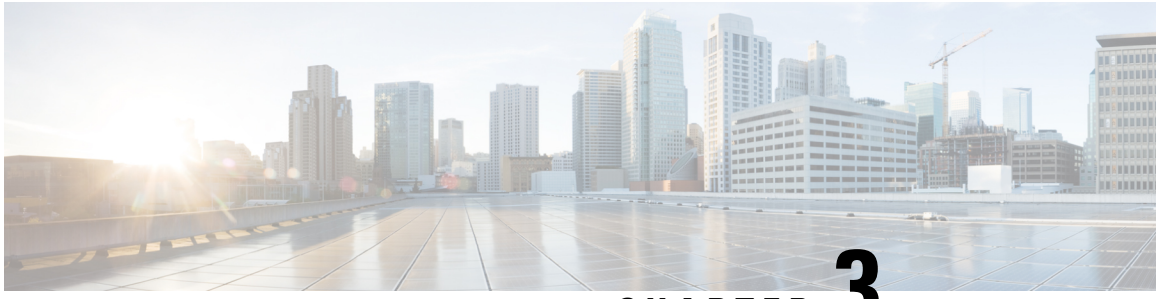

CHAPTER 3

Segmentation

Segmentation

Note To achieve simplification and consistency, the Cisco SD-WAN solution has been rebranded as Cisco Catalyst SD-WAN. In addition, from Cisco IOS XE SD-WAN Release 17.12.1a and Cisco Catalyst SD-WAN Release 20.12.1, the following component changes are applicable: **Cisco vManage** to **Cisco Catalyst SD-WAN Manager**, **Cisco vAnalytics** to **Cisco Catalyst SD-WAN Analytics**, **Cisco vBond** to **Cisco Catalyst SD-WAN Validator**, **Cisco vSmart** to **Cisco Catalyst SD-WAN Controller**, and **Cisco Controllers** to **Cisco Catalyst SD-WAN Control Components**. See the latest Release Notes for a comprehensive list of all the component brand name changes. While we transition to the new names, some inconsistencies might be present in the documentation set because of a phased approach to the user interface updates of the software product.

Table 1: Feature History

Feature Name	Release Information	Description
Added Support for 2,000 VRFs	Cisco IOS XE Catalyst SD-WAN Release 17.13.1a Cisco Catalyst SD-WAN Control Components Release 20.13.1	Increased support from 300 VRFs to 2,000 VRFs in the overlay network, with up to 500 for a single device.

Information About Segmentation

Network segmentation has existed for over a decade and has been implemented in multiple forms and shapes. At its most rudimentary level, segmentation provides traffic isolation. The most common forms of network segmentation are virtual LANs, or VLANs, for Layer 2 solutions, and virtual routing and forwarding, or VRF, for Layer 3 solutions.

Segmentation in Cisco Catalyst SD-WAN

In the Cisco Catalyst SD-WAN overlay network, VRFs divide the network into different segments.

Cisco Catalyst SD-WAN employs the more prevalent and scalable model of creating segments. Essentially, segmentation is done at the edges of a router, and the segmentation information is carried in the packets in the form of an identifier.

The figure shows the propagation of routing information inside a VRF.

Figure 1: Propagation of Routing Information Inside a VRF

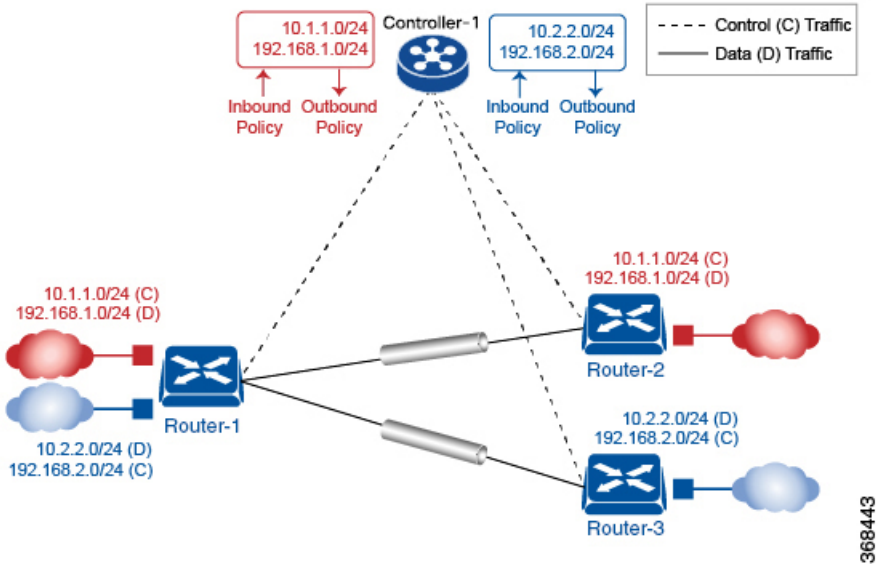

In this figure:

- Router-1 subscribes to two VRFs, red and blue.
  - The red VRF caters to the prefix 10.1.1.0/24 (either directly through a connected interface or learned using the IGP or BGP).
  - The blue VRF caters to the prefix 10.2.2.0/24 (either directly through a connected interface or learned using the IGP or BGP).
- Router-2 subscribes to the red VRF.
  - This VRF caters to the prefix 192.168.1.0/24 (either directly through a connected interface or learned using the IGP or BGP).

- Router-3 subscribes to the blue VRF.
  - This VRF caters to the prefix 192.168.2.0/24 (either directly through a connected interface or learned using the IGP or BGP).

Because each router has an Overlay Management Protocol (OMP) connection over a TLS tunnel to a Cisco SD-WAN Controller, it propagates its routing information to the Cisco SD-WAN Controller. On the Cisco SD-WAN Controller, the network administrator can enforce policies to drop routes, to change TLOCs, which are overlay next hops, for traffic engineering or service chaining. A network administrator can apply these policies as inbound and outbound policies on the Cisco SD-WAN Controller.

All the prefixes belonging to a single VRF are kept in a separate route table. This provides the Layer 3 isolation required for the various segments in the network. So, Router-1 has two VRF route tables, and Router-2 and Router-3 each have one route table. In addition, the Cisco SD-WAN Controller maintains the VRF context of each prefix.

Separate route tables provide isolation on a single node. So how is routing information propagated across the network?

In the Cisco Catalyst SD-WAN solution, this is done using VRF identifiers, as shown in the figure below. A VRF ID, which is carried in a packet, identifies each VRF on a link. When you configure a VRF on a router, the VRF has a label associated with it. The router sends the label, along with the VRF ID, to the Cisco SD-WAN Controller. The Cisco SD-WAN Controller propagates this router-to- VRF ID mapping information to the other routers in the domain. The remote routers then use this label to send traffic to the appropriate VRF. The local routers, on receiving the data with the VRF ID label, use the label to demultiplex the data traffic. This is similar to how MPLS labels are used. This design is based on standard RFCs and is compliant with regulatory procedures such as PCI and HIPAA.

Figure 2: VRF Identifiers

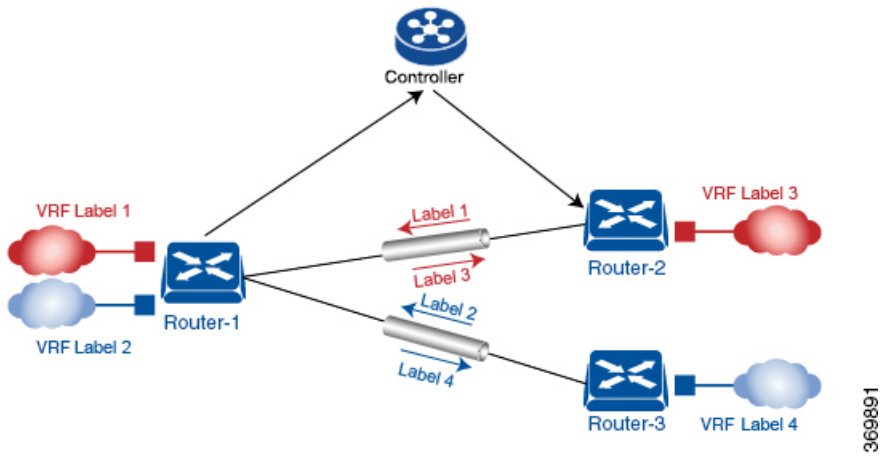

Note The transport network that connects the routers is completely unaware of the VRFs. Only the routers know about VRFs; the rest of the network follows standard IP routing.

VRFs Used in Cisco Catalyst SD-WAN Segmentation

The Cisco Catalyst SD-WAN solution involves the use of VRFs to separate traffic.

Global VRF

The global VRF is used for transport. To enforce the inherent separation between services (such as prefixes that belong to the enterprise) and transport (the network that connects the routers), all the transport interfaces, that is, all the TLOCs, are kept in the global VRF. This ensures that the transport network cannot reach the service network by default. Multiple transport interfaces can belong to the same VRF, and packets can be forwarded to and from transport interfaces.

A global VRF contains all the interfaces for a device, except the management interface, and all the interfaces are disabled. For the control plane to establish itself so that the overlay network can function, you must configure tunnel interfaces in a global VRF. For each interface in a global VRF, you must set an IP address, and create a tunnel connection that sets the color and encapsulation for the WAN transport connection. (The encapsulation is used for the transmission of data traffic.) These three parameters—IP address, color, and encapsulation—define a TLOC (transport location) on the router. The OMP session running on each tunnel sends the TLOC to the Cisco SD-WAN Controllers so that they can learn the overlay network topology.

Dual-Stack Support on Transport VPNs

In the global VRF, Cisco IOS XE Catalyst SD-WAN devices and Cisco SD-WAN Controller support dual stack. To enable dual stack, configure an IPv4 address and an IPv6 address on the tunnel interface. The router learns from a Cisco SD-WAN Controller whether a destination supports IPv4 or IPv6 addresses. When forwarding traffic, a router chooses either the IPv4 or the IPv6 TLOC, based on the destination address. But IPv4 is always preferred when configured.

Management VRF

Mgmt-Intf is the management VRF on Cisco IOS XE Catalyst SD-WAN devices. It is configured and enabled by default. It carries out-of-band network management traffic among the devices in the overlay network. You can modify this configuration, if required.

Restrictions for Segmentation

One inherent limitation of segmentation is its scope. Segmentation solutions either are complex or are limited to a single device or pair of devices connected using an interface. As an example, Layer 3 segmentation provides the following:

- Ability to group prefixes into a unique route table (RIB or FIB).
- Ability to associate an interface with a route table so that traffic traversing the interface is routed based on prefixes in that route table.

This is a useful functionality, but its scope is limited to a single device. To extend the functionality throughout the network, the segmentation information needs to be carried to the relevant points in the network.

Use Cases for Segmentation

- An enterprise wants to keep different lines of business separate (for example, for security or audit reasons).
- The IT department wants to keep authenticated users separate from guest users.
- A retail store wants to separate video surveillance traffic from transactional traffic.
- An enterprise wants to give business partners selective access only to some portions of the network.
- A service or business needs to enforce regulatory compliance, such as compliance with HIPAA, the U.S. Health Insurance Portability and Accountability Act, or with the Payment Card Industry (PCI) security standards.
- A service provider wants to provide VPN services to its medium-sized enterprises.

Enable Network-Wide Segmentation

There are two approaches to providing this network-wide segmentation:

- Define the grouping policy at every device and on every link in the network (basically, you perform Steps 1 and 2 above on every device).
- Define the grouping policy at the edges of the segment, and then carry the segmentation information in the packets for intermediate nodes to handle.

The first approach is useful if every device is an entry or exit point for the segment, which is generally not the case in medium and large networks. The second approach is much more scalable and keeps the transport network free of segments and complexity.

Configure VRF Using Cisco SD-WAN Manager Templates

In Cisco SD-WAN Manager, use a CLI template to configure VRFs for a device. For each VRF, configure a subinterface and link the subinterface to the VRF. You can configure up to 300 VRFs.

Starting from Cisco IOS XE Catalyst SD-WAN Release 17.13.1a, you can configure up to 2,000 VRFs in the overlay network and up to 500 VRFs for a single device. Each VRF deals with fewer routes than before, making the distribution of routes across the network more efficient and easier to scale.

When you push a CLI template to a device, Cisco SD-WAN Manager overwrites existing configuration on the device and loads the configuration defined in the CLI template. Consequently, the template cannot only provide the new content being configured, such as VRFs. The CLI template must include all the configuration details required by the device. To display the relevant configuration details on a device, use the **show sdwan running-config** command.

For details about creating and applying CLI templates, and for an example of configuring VRFs, see the CLI Templates for Cisco IOS XE Catalyst SD-WAN Routers chapter of the Systems and Interfaces Configuration Guide, Cisco IOS XE Release 17.x.

The following are the supported devices:

- Cisco ASR1001-HX
- ASR1002-HX
- C8500-12X
- C8500-12X4QC
- C8500L-8S4X
- C8500-20X6C

Configure VPNs Using Cisco SD-WAN Manager Templates

Create a VPN Template

Note Cisco IOS XE Catalyst SD-WAN devices use VRFs for segmentation and network isolation. However, the following steps still apply if you are configuring segmentation for Cisco IOS XE Catalyst SD-WAN devices through Cisco SD-WAN Manager. When you complete the configuration, the system automatically converts the VPNs to VRFs for Cisco IOS XE Catalyst SD-WAN devices.

Note You can configure a static route through the VPN template.

Step 1 From the Cisco SD-WAN Manager menu, choose **Configuration** > **Templates**.

Step 2 Click **Device Templates**, and click **Create Template**.

Note In Cisco vManage Release 20.7.x and earlier releases **Device Templates** is called **Device**.

Step 3 From the **Create Template** drop-down list, choose **From Feature Template**.

Step 4 From the **Device Model** drop-down list, choose the type of device for which you wish to create the template.

Step 5 To create a template for VPN 0 or VPN 512:

a. Click **Transport & Management VPN**, or scroll to the **Transport & Management VPN** section.

b. From the VPN 0 or VPN 512 drop-down list, click **Create Template**. The VPN template form appears.

The form contains fields for naming the template, and fields for defining VPN parameters.

Step 6 To create a template for VPNs 1 through 511, and 513 through 65527:

a. Click **Service VPN**, or scroll to the **Service VPN** section.

b. Click the **Service VPN** drop-down list.

c. From the **VPN** drop-down list, click **Create Template**. The VPN template form displays.

The form contains fields for naming the template, and fields for defining VPN parameters.

Step 7 In **Template Name**, enter a name for the template. The name can be up to 128 characters and can contain only alphanumeric characters.

Step 8 In **Template Description**, enter a description of the template. The description can be up to 2048 characters and can contain only alphanumeric characters.

Configure Basic VPN Parameters

To configure basic VPN parameters, choose **Basic Configuration** and then configure the following parameters. Parameters marked with an asterisk are required to configure a VPN.

Parameter Name	Description
VPN	Enter the numeric identifier of the VPN. Range for Cisco IOS XE Catalyst SD-WAN devices: 0 through 65527 Values for Cisco Catalyst SD-WAN Controller and Cisco SD-WAN Manager devices: 0, 512
Name	Enter a name for the VPN. **Note** For Cisco IOS XE Catalyst SD-WAN devices, you can't enter a device-specific name for the VPN.
Enhance ECMP keying	Click **On** to enable the use in the ECMP hash key of Layer 4 source and destination ports, in addition to the combination of the source, and destination IP addresses, as the ECMP hash key. ECMP keying is **Off** by default.

Note To complete the configuration of the transport VPN on a router, you must configure at least one interface in VPN 0.

To save the feature template, click **Save**.

Configure Load-Balancing Algorithm Using the CLI

Note Starting from Cisco IOS XE Catalyst SD-WAN Release 17.8.1a, you need CLI template to configure the **src-only** load-sharing algorithm for IPv4 and IPv6 Cisco Catalyst SD-WAN and non Cisco Catalyst SD-WAN traffic. For complete details on the load-sharing algorithm CLI, see IP Commands list.

This following provides CLI configurations for selecting a Cisco Express Forwarding load-balancing algorithm for non Cisco Catalyst SD-WAN IPv4 and IPv6 traffic. You can enable ECMP keying to send the configurations for both IPv4 and IPv6.

```
Device# config-transaction
Device(config)# ip cef load-sharing algorithm {universal [id] | include-ports [ source [id]
 | destination [id]] |
src-only [id]}
```

```
Device# config-transaction
Device(config)# ipv6 cef load-sharing algorithm {universal [id] | include-ports [ source
[id] | destination [id]] |
src-only [id]}
```

This following provides CLI configurations for enabling load balancing algorithm on an interface for Cisco Catalyst SD-WAN IPv4 and IPv6 traffic. You can enable ECMP keying to send the configurations for both IPv4 and IPv6.

```
Device# config-transaction
Device(config)# sdwan
Device(config-sdwan)# ip load-sharing algorithm {ip-and-ports | src-dst-ip | src-ip-only}
```

```
Device# config-transaction
Device(config)# sdwan
Device(config-sdwan)# ipv6 load-sharing algorithm {ip-and-ports | src-dst-ip | src-ip-only}
```

Configure Basic Interface Functionality

To configure basic interface functionality in a VPN, choose **Basic Configuration** and configure the following parameters:

Note Parameters marked with an asterisk are required to configure an interface.

Parameter Name	IPv4 or IPv6	Options	Description
Shutdown*	Click **No** to enable the interface.		
Interface name*	Enter a name for the interface. For Cisco IOS XE Catalyst SD-WAN devices, you must: • Spell out the interface names completely (for example, GigabitEthernet0/0/0). • Configure all the router's interfaces, even if you are not using them, so that they are configured in the shutdown state and so that all default values for them are configured.		
Description	Enter a description for the interface.		
IPv4 / IPv6	Click **IPv4** to configure an IPv4 VPN interface. Click **IPv6** to configure an IPv6 interface.		

Parameter Name	IPv4 or IPv6	Options	Description
Dynamic	Click **Dynamic** to set the interface as a Dynamic Host Configuration Protocol (DHCP) client, so that the interface receives its IP address from a DHCP server.		
	Both	**DHCP Distance**	Optionally, enter an administrative distance value for routes learned from a DHCP server. Default is 1.
	IPv6	**DHCP Rapid Commit**	Optionally, configure the DHCP IPv6 local server to support DHCP Rapid Commit, to enable faster client configuration and confirmation in busy environments. Click **On** to enable DHCP rapid commit. Click **Off** to continue using the regular commit process.
Static	Click **Static** to enter an IP address that doesn't change.		
	IPv4	**IPv4 Address**	Enter a static IPv4 address.
	IPv6	**IPv6 Address**	Enter a static IPv6 address.
Secondary IP Address	**IPv4**	Click **Add** to enter up to four secondary IPv4 addresses for a service-side interface.	
IPv6 Address	**IPv6**	Click **Add** to enter up to two secondary IPv6 addresses for a service-side interface.	
DHCP Helper	**Both**	To designate the interface as a DHCP helper on a router, enter up to eight IP addresses, separated by commas, for DHCP servers in the network. A DHCP helper interface forwards BootP (broadcast) DHCP requests that it receives from the specified DHCP servers.	
Block Non-Source IP	**Yes** / **No**	Click **Yes** to have the interface forward traffic only if the source IP address of the traffic matches the interface's IP prefix range. Click **No** to allow other traffic.	

To save the feature template, click **Save**.

Create a Tunnel Interface

On Cisco IOS XE Catalyst SD-WAN devices, you can configure up to eight tunnel interfaces. This means that each Cisco IOS XE Catalyst SD-WAN device router can have up to eight TLOCs. On Cisco Catalyst SD-WAN Controllers and Cisco SD-WAN Manager, you can configure one tunnel interface.

For the control plane to establish itself so that the overlay network can function, you must configure WAN transport interfaces in VPN 0. The WAN interface will enable the flow of tunnel traffic to the overlay. You can add other parameters shown in the table below only after you configure the WAN interface as a tunnel interface.

To configure a tunnel interface, select **Interface Tunnel** and configure the following parameters:

Parameter Name	Description
Tunnel Interface	Click **On** to create a tunnel interface.

Parameter Name	Description
Color	Select a color for the TLOC.
Port Hop	Click **On** to enable port hopping, or click **Off** to disable it. If port hopping is enabled globally, you can disable it on an individual TLOC (tunnel interface). To control port hopping on a global level, use the System configuration template. Default: Enabled Cisco SD-WAN Manager and Cisco Catalyst SD-WAN Controller default: Disabled
TCP MSS	TCP MSS affects any packet that contains an initial TCP header that flows through the router. When configured, TCP MSS is examined against the MSS exchanged in the three-way handshake. The MSS in the header is lowered if the configured TCP MSS setting is lower than the MSS in the header. If the MSS header value is already lower than the TCP MSS, the packets flow through unmodified. The host at the end of the tunnel uses the lower setting of the two hosts. If the TCP MSS is to be configured, it should be set at 40 bytes lower than the minimum path MTU. Specify the MSS of TPC SYN packets passing through the Cisco IOS XE Catalyst SD-WAN device. By default, the MSS is dynamically adjusted based on the interface or tunnel MTU such that TCP SYN packets are never fragmented. *Range:* 552 to 1460 bytes *Default:* None
Clear-Dont-Fragment	Configure **Clear-Dont-Fragment** for packets that arrive at an interface that has Don't Fragment configured. If these packets are larger than what MTU allows, they are dropped. If you clear the Don't Fragment bit, the packets are fragmented and sent. Click **On** to clear the Dont Fragment bit in the IPv4 packet header for packets being transmitted out of the interface. When the Dont Fragment bit is cleared, packets larger than the MTU of the interface are fragmented before being sent. **Note** **Clear-Dont-Fragment** clears the Dont Fragment bit and the Dont Fragment bit is set. For packets not requiring fragmentation, the Dont Fragment bit is not affected.
Allow Service	Select **On** or **Off** for each service to allow or disallow the service on the interface.

To configure additional tunnel interface parameters, click **Advanced Options**:

Parameter Name	Description
Carrier	Select the carrier name or private network identifier to associate with the tunnel. Values: carrier1, carrier2, carrier3, carrier4, carrier5, carrier6, carrier7, carrier8, default Default: default

Parameter Name	Description
NAT Refresh Interval	Enter the interval between NAT refresh packets sent on a DTLS or TLS WAN transport connection. Range: 1 through 60 seconds Default: 5 seconds
Hello Interval	Enter the interval between Hello packets sent on a DTLS or TLS WAN transport connection. Range: 100 through 10000 milliseconds Default: 1000 milliseconds (1 second)
Hello Tolerance	Enter the time to wait for a Hello packet on a DTLS or TLS WAN transport connection before declaring that transport tunnel to be down. Range: 12 through 60 seconds Default: 12 seconds

Configure DNS and Static Hostname Mapping

To configure DNS addresses and static hostname mapping, click **DNS** and configure the following parameters:

Parameter Name	Options	Description
Primary DNS Address	Click either **IPv4** or **IPv6**, and enter the IP address of the primary DNS server in this VPN.	
New DNS Address	Click **New DNS Address** and enter the IP address of a secondary DNS server in this VPN. This field appears only if you have specified a primary DNS address.	
	Mark as Optional Row	Check the **Mark as Optional Row** check box to mark this configuration as device-specific. To include this configuration for a device, enter the requested variable values when you attach a device template to a device, or create a template variables spreadsheet to apply the variables.
	Hostname	Enter the hostname of the DNS server. The name can be up to 128 characters.
	List of IP Addresses	Enter up to eight IP addresses to associate with the hostname. Separate the entries with commas.
To save the DNS server configuration, click **Add**.		

To save the feature template, click **Save**.

Mapping Host Names to IP Addresses

```
! IP DNS-based host name-to-address translation is enabled
  ip domain lookup
! Specifies hosts 192.168.1.111 and 192.168.1.2 as name servers
  ip name-server 192.168.1.111 192.168.1.2
! Defines cisco.com as the default domain name the device uses to complete
```

```
! Set the name for unqualified host names
  ip domain name cisco.com
```

Configure Segmentation Using the CLI

Configure VRFs Using the CLI

To segment user networks and user data traffic locally at each site and to interconnect user sites across the overlay network, you create VRFs on Cisco IOS XE Catalyst SD-WAN devices. To enable the flow of data traffic, you associate interfaces with each VRF, assigning an IP address to each interface. These interfaces connect to local-site networks, not to WAN transport clouds. For each of these VRFs, you can set other interface-specific properties, and you can configure features specific for the user segment, such as BGP and OSPF routing, VRRP, QoS, traffic shaping, and policing.

On Cisco IOS XE Catalyst SD-WAN devices, a global VRF is used for transport. All Cisco IOS XE Catalyst SD-WAN devices have Mgmt-intf as the default management VRF.

To configure VRFs on Cisco IOS XE Catalyst SD-WAN devices, follow these steps.

Note

- Use the **config-transaction** command to open CLI configuration mode. The config terminal command is not supported on Cisco IOS XE Catalyst SD-WAN devices.
- The VRF ID can be any number between 1 through 511 and 513 through 65535. The numbers 0 and 512 are reserved for Cisco SD-WAN Manager and Cisco SD-WAN Controller.

1. Configure service VRFs.

```
config-transaction
 vrf definition 10
  rd 1:10
  address-family ipv4
   exit-address-family
   exit
 address-family ipv6
  exit-address-family
  exit
exit
```

2. Configure the tunnel interface to be used for overlay connectivity. Each tunnel interface binds to a single WAN interface. For example, if the router interface is Gig0/0/2, the tunnel interface number is 2.

```
config-transaction
 interface Tunnel 2
  no shutdown
  ip unnumbered GigabitEthernet1
  tunnel source GigabitEthernet1
```

```
 tunnel mode sdwan
 exit
```

3. If the router is not connected to a DHCP server, configure the IP address of the WAN interface.

```
interface GigabitEthernet 1
no shutdown
ip address dhcp
```

4. Configure tunnel parameters.

```
config-transaction
 sdwan
  interface GigabitEthernet 2
   tunnel-interface
    encapsulation ipsec
    color lte
    end
```

Note If an IP address is manually configured on the router, configure a default route as shown below. The IP address below indicates a next-hop IP address.

```
config-transaction
 ip route 0.0.0.0 0.0.0.0 192.0.2.25
```

5. Enable OMP to advertise VRF segment vroutes.

```
sdwan
omp
 no shutdown
 graceful-restart
 no as-dot-notation
 timers
 holdtime 15
 graceful-restart-timer 120
 exit
address-family ipv4
 advertise ospf external
 advertise connected
 advertise static
 exit
address-family ipv6
```

```
 advertise ospf external
 advertise connected
 advertise static
 exit
address-family ipv4 vrf 1
 advertise bgp
 exit
exit
```

6. Configure the service VRF interface.

```
config-transaction
 interface GigabitEthernet 2
  no shutdown
  vrf forwarding 10
  ip address 192.0.2.2 255.255.255.0
  exit
```

Verify Configuration

Run the **show ip vrf brief** command to view information about the VRF interface.

```
Device# sh ip vrf brief
  Name                             Default RD            Interfaces
  10                               1:10                  Gi4
  11                               1:11                  Gi3
  30                               1:30
  65528                            <not set>             Lo65528
```

Segmentation (VRFs) Configuration Examples

Some straightforward examples of creating and configuring VRFs to help you understand the configuration procedure for segmenting networks.

Configuration on the Cisco Catalyst SD-WAN Controller

On the Cisco Catalyst SD-WAN Controller, you configure general system parameters and the two VPNs—VPN 0 for WAN transport and VPN 512 for network management—as you did for the Cisco IOS XE Catalyst SD-WAN device. Also, you generally create a centralized control policy that controls how the VPN traffic is propagated through the rest of the network. In this particular example, we create a central policy, shown below, to drop unwanted prefixes from propagating through the rest of the network. You can use a single Cisco Catalyst SD-WAN Controller policy to enforce policies throughout the network.

Here are the steps for creating the control policy on the Cisco Catalyst SD-WAN Controller:

1. Create a list of sites IDs for the sites where you want to drop unwanted prefixes:

```
vSmart(config)# policy lists site-list 20-30 site-id 20
vSmart(config-site-list-20-30)# site-id 30
```

2. Create a prefix list for the prefixes that you do not want to propagate:

```
vSmart(config)# policy lists prefix-list drop-list ip-prefix 10.200.1.0/24
```

3. Create the control policy:

```
vSmart(config)# policy control-policy drop-unwanted-routes sequence 10 match route
prefix-list drop-list
vSmart(config-match)# top
vSmart(config)# policy control-policy drop-unwanted-routes sequence 10 action reject
vSmart(config-action)# top
vSmart(config)# policy control-policy drop-unwanted-routes sequence 10 default-action
accept
vSmart(config-default-action)# top
```

4. Apply the policy to prefixes inbound to the Cisco Catalyst SD-WAN Controller controller:

```
vSmart(config)# apply-policy site-list 20-30 control-policy drop-unwanted-routes in
```

Here is the full policy configuration on the Cisco Catalyst SD-WAN Controller controller:

```
apply-policy
 site-list 20-30
  control-policy drop-unwanted-routes in
 !
!
policy
 lists
  site-list 20-30
   site-id 20
   site-id 30
  !
  prefix-list drop-list
   ip-prefix 10.200.1.0/24
  !
 !
 control-policy drop-unwanted-routes
  sequence 10
   match route
    prefix-list drop-list
   !
   action reject
   !
  !
  default-action accept
 !
!
```

Segmentation CLI Reference

CLI commands for monitoring segmentation (VRFs).

- show dhcp
- show ipv6 dhcp
- show ip vrf brief
- show igmp commands
- show ip igmp groups
- show pim commands

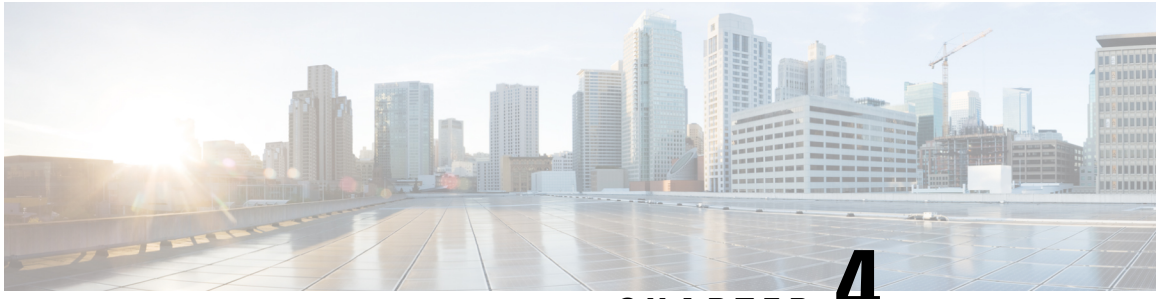

CHAPTER 4

Troubleshoot Cisco Catalyst SD-WAN Segmentation

Note To achieve simplification and consistency, the Cisco SD-WAN solution has been rebranded as Cisco Catalyst SD-WAN. In addition, from Cisco IOS XE SD-WAN Release 17.12.1a and Cisco Catalyst SD-WAN Release 20.12.1, the following component changes are applicable: **Cisco vManage** to **Cisco Catalyst SD-WAN Manager**, **Cisco vAnalytics** to **Cisco Catalyst SD-WAN Analytics**, **Cisco vBond** to **Cisco Catalyst SD-WAN Validator**, **Cisco vSmart** to **Cisco Catalyst SD-WAN Controller**, and **Cisco Controllers** to **Cisco Catalyst SD-WAN Control Components**. See the latest Release Notes for a comprehensive list of all the component brand name changes. While we transition to the new names, some inconsistencies might be present in the documentation set because of a phased approach to the user interface updates of the software product.

Overview

This chapter provides links to documents authored by Cisco subject matter experts (SMEs). They aim to help you resolve technical issues without requiring a support ticket. If these documents are unable to resolve your issue, we recommend visiting the applicable Cisco Community. There is a wealth of information and advice available from fellow Cisco customers who may have experienced this issue already and provided a solution. If you are not able to find a resolution on the Community, it may be best that you raise a support ticket at Cisco Support. In cases where a support ticket has to be raised, these documents provide guidance about the data that should be collected and added to the support ticket. Specify the support document you referred, and TAC can create an improvement request with the document owner.

Support Articles

The documents in this section were created using specific software and hardware listed in the Components Used section of each article. However, this does not mean that they are limited to what is listed in Components Used, and generally remain relevant for later versions of software and hardware. Note that there could be

some changes in the software or hardware that can cause commands to stop working, the syntax to change, or GUIs and CLIs to look different from one release to another.

The following support article is associated with this technology:

Document	Description
Configure Overlapping IP for Same VPN across Multiple Sites with Failure Scenarios	This document describes the scenario with overlapping address spaces in the same VPN across multiple sites in Cisco Catalyst SD-WAN overlay. It depicts the sample network, traffic behavior in normal/failover scenarios, configuration, and verification.

Feedback Request

Your input helps. A key aspect to improving these support documents is customer feedback. Note that these documents are owned and maintained by multiple teams within Cisco. If you find an issue specific to the document (unclear, confusing, information missing, etc):

- Provide feedback using the **Feedback** button located at the right panel of the corresponding article. The document owner will be notified, and will either update the article, or flag it for removal.
- Include information regarding the section, area, or issue you had with the document and what could be improved. Provide as much detail as possible.

Disclaimer and Caution

The information in this document was created from the devices in a specific lab environment. All of the devices used in this document started with a cleared (default) configuration. If your network is live, ensure that you understand the potential impact of any command.