Carrier Ethernet Configuration Guide, Cisco IOS XE 17 (Cisco NCS 4200 Series)

First Published: 2019-12-22

Last Modified: 2022-04-29

Americas Headquarters
Cisco Systems, Inc.
170 West Tasman Drive
San Jose, CA 95134-1706
USA
http://www.cisco.com
Tel: 408 526-4000
800 553-NETS (6387)
Fax: 408 527-0883

© 2022 Cisco Systems, Inc. All rights reserved.

CONTENTS

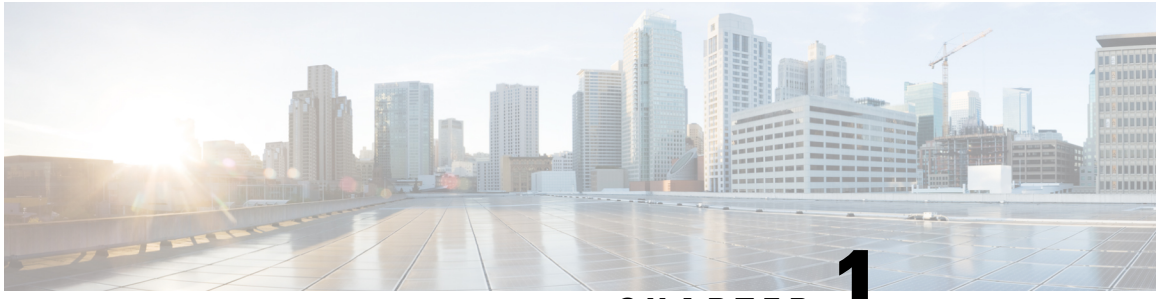

CHAPTER 1

Feature History

The following table lists the new and modified features supported in the Carrier Ethernet Configuration Guide in Cisco IOS XE 17 releases.

Feature	Description
Cisco IOS XE Dublin 17.10.1	
Tagged Packet Support Using Link Layer Discovery Protocol (LLDP)	LLDP now supports tagged packet transmission over a service instance with dot1q encapsulation. LLDP advertises information about themselves to their network neighbors, and store the information they discover from other devices. Though both these transmitted frames go through the same physical interface, they can be uniquely identified by the information advertised in the Port ID Type-Length-Value (TLV). You can use the lldp enable command to enable LLDP over a particular service instance. Use the **show lldp neighbors** and **show lldp entry** command outputs for neighboring device details. This feature is supported on both Cisco RSP2 and RSP3 modules.
Cisco IOS XE Cupertino 17.9.1	
Custom Idle Pattern	You can configure idle pattern manually on CEM circuits and verify if it's stable and transmitted to the other end in alarm conditions. You can configure on all CEM PWs in a T1/E1 circuit. Supported on the following IMs on CESoPSN circuits with both partial and full time slots. • 48 port T1/E1 Interface Module • 48 port DS3/E3 Interface Module • 1-port OC481/ STM-16 or 4-port OC-12/OC-3 / STM-1/STM-4 + 12-Port T1/E1 + 4-Port T3/E3 CEM Interface Module • NCS 4200 Combo 8-Port SFP GE and 1-Port 10 GE 20G Interface Module These idle pattern numbers are used for tracking purposes.
Cisco IOS XE Cupertino 17.8.1	

Feature	Description
Latching Loopback	Latching Loopbacks (LLs) are used for Service Activation Testing (SAT) and troubleshooting the information rate for point-to-point and multipoint services across multiple Carrier Ethernet Networks (CENs). Thus, eliminate the need for a peer to interoperate with the Service Provider for SAT. You can configure latching loopback on an interface. Latching loopback supports the following features on RSP3 module: • Internal and external loopbacks for a port. • Latching loopback states such as prohibited, inactive, and active. • Connectivity Fault Management (CFM) in both upward and downwards direction on an interface. • Latching loopback activation and deactivation on a service instance.
Cisco IOS XE Bengaluru 17.5.1	
CFM Sessions Hardware Offload	This feature enables for effective CPU utilization by offloading the one second CCM interval sessions on the hardware.
Cisco IOS XE Bengaluru 17.4.1	
Enabling the Bridge Domain Interface	You can configure the **`platform bdi enable-state up`** global command.

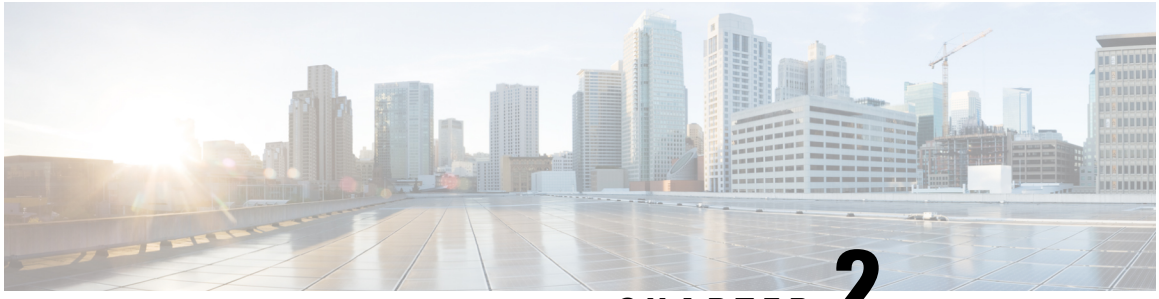

CHAPTER 2

Using Ethernet Operations Administration and Maintenance

Ethernet Operations, Administration, and Maintenance (OAM) is a protocol for installing, monitoring, and troubleshooting Ethernet metropolitan-area networks (MANs) and Ethernet WANs. It relies on a new, optional sublayer in the data link layer of the Open Systems Interconnection (OSI) model. The OAM features covered by this protocol are Discovery, Link Monitoring, Remote Fault Detection, Remote Loopback, and Cisco Proprietary Extensions.

The advent of Ethernet as a MAN and WAN technology has emphasized the necessity for integrated management for larger deployments. For Ethernet to extend into public MANs and WANs, it must be equipped with a new set of requirements on Ethernet's traditional operations, which had been centered on enterprise networks only. The expansion of Ethernet technology into the domain of service providers, where networks are substantially larger and more complex than enterprise networks and the user-base is wider, makes operational management of link uptime crucial.

Information About Using Ethernet Operations Administration and Maintenance

Ethernet OAM

Ethernet OAM is a protocol for installing, monitoring, and troubleshooting metro Ethernet networks and Ethernet WANs. It relies on a new, optional sublayer in the data link layer of the OSI model. Ethernet OAM can be implemented on any full-duplex point-to-point or emulated point-to-point Ethernet link. A system-wide implementation is not required; OAM can be deployed for part of a system; that is, on particular interfaces.

Normal link operation does not require Ethernet OAM. OAM frames, called OAM protocol data units (PDUs), use the slow protocol destination MAC address 0180.c200.0002. They are intercepted by the MAC sublayer and cannot propagate beyond a single hop within an Ethernet network.

Ethernet OAM is a relatively slow protocol with modest bandwidth requirements. The frame transmission rate is limited to a maximum of 10 frames per second; therefore, the impact of OAM on normal operations is

negligible. However, when link monitoring is enabled, the CPU must poll error counters frequently. In this case, the required CPU cycles will be proportional to the number of interfaces that have to be polled.

Two major components, the OAM client and the OAM sublayer, make up Ethernet OAM. The following two sections describe these components.

OAM Client

The OAM client is responsible for establishing and managing Ethernet OAM on a link. The OAM client also enables and configures the OAM sublayer. During the OAM discovery phase, the OAM client monitors OAM PDUs received from the remote peer and enables OAM functionality on the link based on local and remote state as well as configuration settings. Beyond the discovery phase (at steady state), the OAM client is responsible for managing the rules of response to OAM PDUs and managing the OAM remote loopback mode.

OAM Sublayer

The OAM sublayer presents two standard IEEE 802.3 MAC service interfaces: one facing toward the superior sublayers, which include the MAC client (or link aggregation), and the other interface facing toward the subordinate MAC control sublayer. The OAM sublayer provides a dedicated interface for passing OAM control information and OAM PDUs to and from a client.

The OAM sublayer is made up of three components: control block, multiplexer, and packet parser (p-parser). Each component is described in the following sections.

Control Block

The control block provides the interface between the OAM client and other blocks internal to the OAM sublayer. The control block incorporates the discovery process, which detects the existence and capabilities of remote OAM peers. It also includes the transmit process that governs the transmission of OAM PDUs to the multiplexer and a set of rules that govern the receipt of OAM PDUs from the p-parser.

Multiplexer

The multiplexer manages frames generated (or relayed) from the MAC client, control block, and p-parser. The multiplexer passes through frames generated by the MAC client untouched. It passes OAM PDUs generated by the control block to the subordinate sublayer; for example, the MAC sublayer. Similarly, the multiplexer passes loopback frames from the p-parser to the same subordinate sublayer when the interface is in OAM remote loopback mode.

P-Parser

The p-parser classifies frames as OAM PDUs, MAC client frames, or loopback frames and then dispatches each class to the appropriate entity. OAM PDUs are sent to the control block. MAC client frames are passed to the superior sublayer. Loopback frames are dispatched to the multiplexer.

Benefits of Ethernet OAM

Ethernet OAM provides the following benefits:

- Competitive advantage for service providers.
- Standardized mechanism to monitor the health of a link and perform diagnostics.

Note REP traps are prioritized when both Ethernet OAM and REP traps are configured on the same port. If you want to view Ethernet OAM logs, then you must disable REP configurations.

Cisco Implementation of Ethernet OAM

The Cisco implementation of Ethernet OAM consists of the Ethernet OAM shim and the Ethernet OAM module.

The Ethernet OAM shim is a thin layer that connects the Ethernet OAM module and the platform code. It is implemented in the platform code (driver). The shim also communicates port state and error conditions to the Ethernet OAM module via control signals.

The Ethernet OAM module, implemented within the control plane, handles the OAM client as well as control block functionality of the OAM sublayer. This module interacts with the CLI and Simple Network Management Protocol (SNMP)/programmatic interface via control signals. In addition, this module interacts with the Ethernet OAM shim through OAM PDU flows.

OAM Features

The OAM features as defined by IEEE 802.3ah, *Ethernet in the First Mile*, are discovery, Link Monitoring, Remote Fault Detection, Remote Loopback, and Cisco Proprietary Extensions.

Discovery

Discovery is the first phase of Ethernet OAM and it identifies the devices in the network and their OAM capabilities. Discovery uses information OAM PDUs. During the discovery phase, the following information is advertised within periodic information OAM PDUs:

- OAM mode—Conveyed to the remote OAM entity. The mode can be either active or passive and can be used to determine device functionality.
- OAM configuration (capabilities)—Advertises the capabilities of the local OAM entity. With this information a peer can determine what functions are supported and accessible; for example, loopback capability.
- OAM PDU configuration—Includes the maximum OAM PDU size for receipt and delivery. This information along with the rate limiting of 10 frames per second can be used to limit the bandwidth allocated to OAM traffic.
- Platform identity—A combination of an organization unique identifier (OUI) and 32-bits of vendor-specific information. OUI allocation, controlled by the IEEE, is typically the first three bytes of a MAC address.

Discovery includes an optional phase in which the local station can accept or reject the configuration of the peer OAM entity. For example, a node may require that its partner support loopback capability to be accepted into the management network. These policy decisions may be implemented as vendor-specific extensions.

Link Monitoring

Link monitoring in Ethernet OAM detects and indicates link faults under a variety of conditions. Link monitoring uses the event notification OAM PDU and sends events to the remote OAM entity when there are problems detected on the link. The error events include the following:

- Error Symbol Period (error symbols per second)—The number of symbol errors that occurred during a specified period exceeded a threshold. These errors are coding symbol errors.
- Error Frame (error frames per second)—The number of frame errors detected during a specified period exceeded a threshold.
- Error Frame Period (error frames per *n* frames)—The number of frame errors within the last n frames has exceeded a threshold.
- Error Frame Seconds Summary (error seconds per *m* seconds)—The number of error seconds (1-second intervals with at least one frame error) within the last m seconds has exceeded a threshold.

Since IEEE 802.3ah OAM does not provide a guaranteed delivery of any OAM PDU, the event notification OAM PDU may be sent multiple times to reduce the probability of a lost notification. A sequence number is used to recognize duplicate events.

Remote Failure Indication

Faults in Ethernet connectivity that are caused by slowly deteriorating quality are difficult to detect. Ethernet OAM provides a mechanism for an OAM entity to convey these failure conditions to its peer via specific flags in the OAM PDU. The following failure conditions can be communicated:

- Link Fault—Loss of signal is detected by the receiver; for instance, the peer's laser is malfunctioning. A link fault is sent once per second in the information OAM PDU. Link fault applies only when the physical sublayer is capable of independently transmitting and receiving signals.
- Dying Gasp—An unrecoverable condition has occurred; for example, when an interface is shut down. This type of condition is vendor specific. A notification about the condition may be sent immediately and continuously.

Note Dying Gasp is only supported on interface down events. It is not supported in System down scenarios.

For more information on Dying Gasp, see the Dying Gasp Support for Loss of Power Supply Through SNMP, Syslog and Ethernet OAM chapter in the Cisco NCS 520 Series Router Configuration Guide.

- Critical Event—An unspecified critical event has occurred. This type of event is vendor specific. A critical event may be sent immediately and continuously.

Remote Loopback

An OAM entity can put its remote peer into loopback mode using the loopback control OAM PDU. Loopback mode helps an administrator ensure the quality of links during installation or when troubleshooting. In loopback mode, every frame received is transmitted back on the same port except for OAM PDUs and pause frames. The periodic exchange of OAM PDUs must continue during the loopback state to maintain the OAM session.

The loopback command is acknowledged by responding with an information OAM PDU with the loopback state indicated in the state field. This acknowledgement allows an administrator, for example, to estimate if a network segment can satisfy a service-level agreement. Acknowledgement makes it possible to test delay, jitter, and throughput.

When an interface is set to the remote loopback mode the interface no longer participates in any other Layer 2 or Layer 3 protocols; for example Spanning Tree Protocol (STP) or Open Shortest Path First (OSPF). The reason is that when two connected ports are in a loopback session, no frames other than the OAM PDUs are sent to the CPU for software processing. The non-OAM PDU frames are either looped back at the MAC level or discarded at the MAC level.

From a user's perspective, an interface in loopback mode is in a link-up state.

Note Remote loopback is *not* supported on the RSP3 module.

Cisco Vendor-Specific Extensions

Ethernet OAM allows vendors to extend the protocol by allowing them to create their own type-length-value (TLV) fields.

OAM Messages

Ethernet OAM messages or OAM PDUs are standard length, untagged Ethernet frames within the normal frame length bounds of 64 to 1518 bytes. The maximum OAM PDU frame size exchanged between two peers is negotiated during the discovery phase.

OAM PDUs always have the destination address of slow protocols (0180.c200.0002) and an Ethertype of 8809. OAM PDUs do not go beyond a single hop and have a hard-set maximum transmission rate of 10 OAM PDUs per second. Some OAM PDU types may be transmitted multiple times to increase the likelihood that they will be successfully received on a deteriorating link.

Four types of OAM messages are supported:

- Information OAM PDU--A variable-length OAM PDU that is used for discovery. This OAM PDU includes local, remote, and organization-specific information.
- Event notification OAM PDU--A variable-length OAM PDU that is used for link monitoring. This type of OAM PDU may be transmitted multiple times to increase the chance of a successful receipt; for example, in the case of high-bit errors. Event notification OAM PDUs also may include a time stamp when generated.
- Loopback control OAM PDU--An OAM PDU fixed at 64 bytes in length that is used to enable or disable the remote loopback command.
- Vendor-specific OAM PDU--A variable-length OAM PDU that allows the addition of vendor-specific extensions to OAM.

IEEE 802.3ah Link Fault RFI Support

The IEEE 802.3ah Link Fault RFI Support feature provides a per-port configurable option that moves a port into a blocking state when an OAM PDU control request packet is received with the Link Fault Status flag

set. In the blocking state, the port can continue to receive OAM PDUs, detect remote link status, and automatically recover when the remote link becomes operational. When an OAM PDU is received with the Link Fault Status flag set to zero or FALSE, the port is enabled and all VLANs configured on the port are set to “forwarding.”

Note If you configure the Ethernet OAM timeout period to be the minimum allowable value of 2 seconds, the Ethernet OAM session may be dropped briefly when the port transitions from blocked to unblocked. This action will not occur by default; the default timeout value is 5 seconds.

Before the release of the IEEE 802.3ah Link Fault RFI Support feature, when an OAM PDU control request packet was received with the Link Fault Status flag set, one of three actions was taken:

- The port was put in the error-disable state, meaning that the port did not send or receive packets, including Bridge Protocol Data Units (BPDU) packets. In the error-disable state, a link can automatically recover after the error-disable timeout period but cannot recover automatically when the remote link becomes operational.
- A warning message was displayed or logged, and the port remained operational.
- The Link Fault Status flag was ignored.

Ethernet Connectivity Fault Management

Ethernet connectivity fault management (CFM) is an end-to-end per-service-instance Ethernet layer OAM protocol that includes proactive connectivity monitoring, fault verification, and fault isolation. End to end can be provider edge (PE) to PE or customer edge (CE) to CE. Per service instance means per VLAN.

For more information about Ethernet CFM, see Ethernet Connectivity Fault Management .

High Availability Features Supported by 802.3ah

In access and service provider networks using Ethernet technology, High Availability (HA) is a requirement, especially on Ethernet OAM components that manage Ethernet virtual circuit (EVC) connectivity. End-to-end connectivity status information is critical and must be maintained on a hot standby Route Switch Processor (RSP) (a standby RSP that has the same software image as the active RSP and supports synchronization of line card, protocol, and application state information between RSPs for supported features and protocols). End-to-end connectivity status is maintained on the CE, PE, and access aggregation PE (uPE) network nodes based on information received by protocols such as CFM and 802.3ah. This status information is used to either stop traffic or switch to backup paths when an EVC is down. Metro Ethernet clients (for example, CFM and 802.3ah) maintain configuration data and dynamic data, which is learned through protocols. Every transaction involves either accessing or updating data among the various databases. If the databases are synchronized across active and standby modules, the RSPs are transparent to clients.

Cisco infrastructure provides various component application program interfaces (APIs) for clients that are helpful in maintaining a hot standby RSP. Metro Ethernet HA clients (such as, HA/ISSU, CFM HA/ISSU, 802.3ah HA/ISSU) interact with these components, update the databases, and trigger necessary events to other components.

Benefits of 802.3ah HA

- Elimination of network downtime for Cisco software image upgrades, resulting in higher availability
- Elimination of resource scheduling challenges associated with planned outages and late night maintenance windows
- Accelerated deployment of new services and applications and faster implementation of new features, hardware, and fixes due to the elimination of network downtime during upgrades
- Reduced operating costs due to outages while delivering higher service levels due to the elimination of network downtime during upgrades

NSF SSO Support in 802.3ah OAM

The redundancy configurations Stateful Switchover (SSO) and Nonstop Forwarding (NSF) are both supported in Ethernet OAM and are automatically enabled. A switchover from an active to a standby Route Switch Processor (RSP) occurs when the active RSP fails, is removed from the networking device, or is manually taken down for maintenance. NSF interoperates with the SSO feature to minimize network downtime following a switchover. The primary function of Cisco NSF is to continue forwarding IP packets following an RSP switchover.

For detailed information about the SSO feature, see the “Configuring Stateful Switchover” module of the *High Availability Configuration Guide*. For detailed information about the NSF feature, see the “Configuring Cisco Nonstop Forwarding” module of the *High Availability Configuration Guide.*

ISSU Support in 802.3ah OAM

Cisco In-Service Software Upgrades (ISSUs) allow you to perform a Cisco software upgrade or downgrade without disrupting packet flow. ISSU is automatically enabled in 802.3ah. OAM performs a bulk update and a runtime update of the continuity check database to the standby Route Switch Processor (RSP), including adding, deleting, or updating a row. This checkpoint data requires ISSU capability to transform messages from one release to another. All the components that perform active RSP to standby RSP updates using messages require ISSU support.

ISSU lowers the impact that planned maintenance activities have on network availability by allowing software changes while the system is in service. For detailed information about ISSU, see the “Performing an In Service Software Upgrade” module of the *High Availability Configuration Guide*.

How to Set Up and Configure Ethernet Operations Administration and Maintenance

Enabling Ethernet OAM on an Interface

Ethernet OAM is by default disabled on an interface.

Procedure

Step 1 **enable**

Example:

```
Device> enable
```

Enables privileged EXEC mode.

- Enter your password if prompted.

Step 2 **configure terminal**

Example:

```
Device# configure terminal
```

Enters global configuration mode.

Step 3 **interface** *type number*

Example:

```
Device(config)# interface gigabitethernet 0/0/1
```

Specifies an interface and enters interface configuration mode.

Step 4 **ethernet oam** [**max-rate** *oampdus* | **min-rate** *num-seconds*| **mode** {**active** | **passive**} | **timeout** *seconds*]

Example:

```
Device(config-if)# ethernet oam
```

Enables Ethernet OAM.

Step 5 **exit**

Example:

```
Device(config-if)# exit
```

Returns to global configuration mode.

Disabling and Enabling a Link Monitoring Session

Link monitoring is enabled by default when you enable Ethernet OAM. Perform these tasks to disable and enable link monitoring sessions:

Disabling a Link Monitoring Session

Perform this task to disable a link monitoring session.

Procedure

Step 1 **enable**

Example:

```
Device> enable
```

Enables privileged EXEC mode.

- Enter your password if prompted.

Step 2 **configure terminal**

Example:

```
Device# configure terminal
```

Enters global configuration mode.

Step 3 **interface** *type number*

Example:

```
Device(config)# interface gigabitEthernet 0/0/2
```

Specifies an interface and enters interface configuration mode.

Step 4 **ethernet oam** [**max-rate** *oampdus* | **min-rate** *num-seconds*| **mode** {**active** | **passive**} | **timeout** *seconds*]

Example:

```
Device(config-if)# ethernet oam
```

Enables Ethernet OAM.

Step 5 **no ethernet oam link-monitor supported**

Example:

```
Device(config-if)# no ethernet oam link-monitor supported
```

Disables link monitoring on the interface.

Step 6 **exit**

Example:

```
Device(config-if)# exit
```

Returns to global configuration mode.

Enabling a Link Monitoring Session

Perform this task to reenable a link monitoring session after it was previously disabled.

Procedure

Step 1 **enable**

Example:

```
Device> enable
```

Enables privileged EXEC mode.

- Enter your password if prompted.

Step 2 **configure terminal**

Example:

```
Device# configure terminal
```

Enters global configuration mode.

Step 3 **interface** *type number*

Example:

```
Device(config)# interface gigabitEthernet 0/0/1
```

Specifies an interface and enters interface configuration mode.

Step 4 **ethernet oam link-monitor supported**

Example:

```
Device(config-if)# ethernet oam link-monitor supported
```

Enables link monitoring on the interface.

Step 5 **exit**

Example:

```
Device(config-if)# exit
```

Returns to global configuration mode.

Stopping and Starting Link Monitoring Operations

Link monitoring operations start automatically when Ethernet OAM is enabled on an interface. When link monitoring operations are stopped, the interface does not actively send or receive event notification OAM PDUs. The tasks in this section describe how to stop and start link monitoring operations.

Stopping Link Monitoring Operations

Perform this task to stop link monitoring operations.

Procedure

Step 1 **enable**

Example:

```
Device> enable
```

Enables privileged EXEC mode.

- Enter your password if prompted.

Step 2 **configure terminal**

Example:

```
Device# configure terminal
```

Enters global configuration mode.

Step 3 **interface** *type number*

Example:

```
Device(config)# interface gigabitethernet 0/0/2
```

Specifies an interface and enters interface configuration mode.

Step 4 **ethernet oam** [**max-rate** *oampdus* | **min-rate** *num-seconds*| **mode** {**active** | **passive**} | **timeout** *seconds*]

Example:

```
Device(config-if)# ethernet oam
```

Enables Ethernet OAM.

Step 5 **no ethernet oam link-monitor on**

Example:

```
Device(config-if)# no ethernet oam link-monitor on
```

Stops link monitoring operations.

Step 6 **exit**

Example:

```
Device(config-if)# exit
```

Returns to global configuration mode.

Starting Link Monitoring Operations

Perform this task to start link monitoring operations.

Procedure

Step 1 **enable**

Example:

```
Device> enable
```

Enables privileged EXEC mode.

- Enter your password if prompted.

Step 2 **configure terminal**

Example:

```
Device# configure terminal
```

Enters global configuration mode.

Step 3 **interface** *type number*

Example:

```
Device(config)# interface gigabitethernet 0/0/2
```

Specifies an interface and enters interface configuration mode.

Step 4 **ethernet oam link-monitor on**

Example:

```
Device(config-if)# ethernet oam link-monitor on
```

Starts link monitoring operations.

Step 5 **exit**

Example:

```
Device(config-if)# exit
```

Returns to global configuration mode.

Configuring Link Monitoring Options

Perform this optional task to specify link monitoring options. Steps 4 through 10 can be performed in any sequence.

Procedure

Step 1 **enable**

Example:

```
Device> enable
```

Enables privileged EXEC mode.

- Enter your password if prompted.

Step 2 **configure terminal**

Example:

```
Device# configure terminal
```

Enters global configuration mode.

Step 3 **interface** *type number*

Example:

```
Device(config)# interface gigabitEthernet 0/0/3
```

Identifies the interface and enters interface configuration mode.

Step 4 **ethernet oam** [**max-rate** *oampdus* | **min-rate** *num-seconds*| **mode** {**active** | **passive**} | **timeout** *seconds*]

Example:

```
Device(config-if)# ethernet oam
```

Enables Ethernet OAM.

Step 5 **ethernet oam link-monitor high-threshold action error-disable-interface**

Example:

```
Device(config-if)# ethernet oam link-monitor high-threshold action error-disable-interface
```

Configures an error-disable function on an Ethernet OAM interface when a high threshold for an error is exceeded.

Step 6 **ethernet oam link-monitor frame** {**threshold** {**high** {**none** | *high-frames*} | **low** *low-frames*} | **window** *milliseconds*}

Example:

```
Device(config-if)# ethernet oam link-monitor frame window 399
```

Configures a number for error frames that when reached triggers an action.

Step 7 **ethernet oam link-monitor frame-period** {**threshold** {**high** {**none** | *high-frames*} | **low** *low-frames*} | **window** *frames*}

Example:

```
Device(config-if)# ethernet oam link-monitor frame-period threshold high 599
```

Configures a number of frames to be polled.

Frame period is a user-defined parameter.

Step 8 **ethernet oam link-monitor frame-seconds** {**threshold** {**high** {**none** | *high-frames*} | **low** *low-frames*} | **window** *milliseconds*}

Example:

```
Device(config-if)# ethernet oam link-monitor frame-seconds window 699
```

Configures a period of time in which error frames are counted.

Step 9 **ethernet oam link-monitor receive-crc** {**threshold** {**high** {*high-frames* | **none**} | **low** *low-frames*} | **window** *milliseconds*}

Example:

```
Device(config-if)# ethernet oam link-monitor receive-crc window 99
```

Configures an Ethernet OAM interface to monitor ingress frames with cyclic redundancy check (CRC) errors for a period of time.

Step 10 **ethernet oam link-monitor transmit-crc** {**threshold** {**high** {*high-frames* | **none**} | **low** *low-frames*} | **window** *milliseconds*}

Example:

```
Device(config-if)# ethernet oam link-monitor transmit-crc threshold low 199
```

Configures an Ethernet OAM interface to monitor egress frames with CRC errors for a period of time.

Step 11 **ethernet oam link-monitor symbol-period** {**threshold** {**high** {**none** | *high-symbols*} | **low** *low-symbols*} | **window** *symbols*}

Example:

```
Device(config-if)# ethernet oam link-monitor symbol-period threshold high 299
```

Configures a threshold or window for error symbols, in number of symbols.

Step 12 **exit**

Example:

```
Device(config-if)# exit
```

Returns to global configuration mode.

Example

Configuring Global Ethernet OAM Options Using a Template

Perform this task to create a template to use for configuring a common set of options on multiple Ethernet OAM interfaces. Steps 4 through 10 are optional and can be performed in any sequence. These steps may also be repeated to configure different options.

Procedure

Step 1 **enable**

Example:

```
Device> enable
```

Enables privileged EXEC mode.

- Enter your password if prompted.

Step 2 **configure terminal**

Example:

```
Device# configure terminal
```

Enters global configuration mode.

Step 3 **template** *template-name*

Example:

```
Device(config)# template oam-temp
```

Configures a template and enters template configuration mode.

Step 4 **ethernet oam link-monitor receive-crc** {**threshold** {**high** {*high-frames* | **none**} | **low** *low-frames*} | **window** *milliseconds*}

Example:

```
Device(config-template)# ethernet oam link-monitor receive-crc window 99
```

Configures an Ethernet OAM interface to monitor ingress frames with CRC errors for a period of time.

Step 5 **ethernet oam link-monitor transmit-crc** {**threshold** {**high** {*high-frames* | **none**} | **low** *low-frames*} | **window** *milliseconds*}

Example:

```
Device(config-template)# ethernet oam link-monitor transmit-crc threshold low 199
```

Configures an Ethernet OAM interface to monitor egress frames with CRC errors for a period of time.

Step 6 **ethernet oam link-monitor symbol-period** {**threshold** {**high** {**none** | *high-symbols*} | **low** *low-symbols*} | **window** *symbols*}

Example:

```
Device(config-template)# ethernet oam link-monitor symbol-period threshold high 299
```

Configures a threshold or window for error symbols, in number of symbols.

Step 7 **ethernet oam link-monitor high-threshold action error-disable-interface**

Example:

```
Device(config-template)# ethernet oam link-monitor high-threshold action
error-disable-interface
```

Configures an error-disable function on an Ethernet OAM interface when a high threshold for an error is exceeded.

Step 8 **ethernet oam link-monitor frame** {**threshold** {**high** {**none** | *high-frames*} | **low** *low-frames*} | **window** *milliseconds*}

Example:

```
Device(config-template)# ethernet oam link-monitor frame window 399
```

Configures a number for error frames that when reached triggers an action.

Step 9 **ethernet oam link-monitor frame-period** {**threshold** {**high** {**none** | *high-frames*} | **low** *low-frames*} | **window** *frames*}

Example:

```
Device(config-template)# ethernet oam link-monitor frame-period threshold high 599
```

Configures a number of frames to be polled.

Frame period is a user-defined parameter.

Step 10 **ethernet oam link-monitor frame-seconds** {**threshold** {**high** {**none** | *high-frames*} | **low** *low-frames*} | **window** *milliseconds*}

Example:

```
Device(config-template)# ethernet oam link-monitor frame-seconds window 699
```

Configures a period of time in which error frames are counted.

Step 11 **exit**

Example:

```
Device(config-template)# exit
```

Returns to global configuration mode.

Step 12 **interface** *type number*

Example:

```
Device(config)# interface gigabitEthernet 0/0/2
```

Identifies the interface on which to use the template and enters interface configuration mode.

Step 13 **source template** *template-name*

Example:

```
Device(config-if)# source template oam-temp
```

Applies to the interface the options configured in the template.

Step 14 **exit**

Example:

```
Device(config-if)# exit
```

Returns to global configuration mode.

Step 15 **exit**

Example:

```
Device(config)# exit
```

Returns to privileged EXEC mode.

Step 16 **show running-config**

Example:

```
Device# show running-config
```

Displays the updated running configuration.

Configuring a Port for Link Fault RFI Support

Perform this task to put a port into a blocking state when an OAM PDU control request packet is received with the Link Fault Status flag set.

Procedure

Step 1 **enable**

Example:

```
Device> enable
```

Enables privileged EXEC mode.

- Enter your password if prompted.

Step 2 **configure terminal**

Example:

```
Device# configure terminal
```

Enters global configuration mode.

Step 3 **interface** *type number*

Example:

```
Device(config)# interface gigabitethernet 0/0/1
```

Enters interface configuration mode.

Step 4 **ethernet oam remote-failure** {**critical-event** | **dying-gasp** | **link-fault**} **action** { }

Example:

Sets the interface to the blocking state when a critical event occurs.

Step 5 **exit**

Example:

```
Device(config-if)# exit
```

Returns to global configuration mode.

Configuration Examples for Ethernet Operations Administration and Maintenance

The following example shows how to configure Ethernet OAM options using a template and overriding that configuration by configuring an interface. In this example, the network supports a Gigabit Ethernet interface between the customer edge device and provider edge device.

```
! Configure a global OAM template for both PE and CE configuration.
!
Device(config)# template oam
Device(config-template)# ethernet oam link-monitor symbol-period threshold low 10
Device(config-template)# ethernet oam link-monitor symbol-period threshold high 100
Device(config-template)# ethernet oam link-monitor frame window 100
Device(config-template)# ethernet oam link-monitor frame threshold low 10
Device(config-template)# ethernet oam link-monitor frame threshold high 100
Device(config-template)# ethernet oam link-monitor frame-period window 100
Device(config-template)# ethernet oam link-monitor frame-period threshold low 10
Device(config-template)# ethernet oam link-monitor frame-period threshold high 100
Device(config-template)# ethernet oam link-monitor frame-seconds window 1000
Device(config-template)# ethernet oam link-monitor frame-seconds threshold low 10
Device(config-template)# ethernet oam link-monitor frame-seconds threshold high 100
Device(config-template)# ethernet oam link-monitor receive-crc window 100
Device(config-template)# ethernet oam link-monitor receive-crc threshold high 100
Device(config-template)# ethernet oam link-monitor transmit-crc window 100
Device(config-template)# ethernet oam link-monitor transmit-crc threshold high 100
Device(config-template)# ethernet oam remote-failure dying-gasp action error-disable-interface
Device(config-template)# exit
!
! Enable Ethernet OAM on the CE interface
!
Device(config)# interface gigabitethernet 0/0/1
Device(config-if)# ethernet oam
!
! Apply the global OAM template named "oam" to the interface.
!
Device(config-if)# source template oam
!
! Configure any interface-specific link monitoring commands to override the template
configuration. The following example disables the high threshold link monitoring for receive
 CRC errors.
!
```

```
Device(config-if)# ethernet oam link-monitor receive-crc threshold high none
!
! Enable Ethernet OAM on the PE interface
!
Device(config)# interface gigabitethernet 0/0/1
Device(config-if)# ethernet oam
!
! Apply the global OAM template named "oam" to the interface.
!
Device(config-if)# source template oam
```

The following examples show how to verify various Ethernet OAM configurations and activities.

Verifying an OAM Session

The following example shows that the local OAM client, Gigabit Ethernet interface Gi0/0/1, is in session with a remote client with MAC address 0012.7fa6.a700 and OUI 00000C, which is the OUI for Cisco. The remote client is in active mode and has established capabilities for link monitoring and remote loopback for the OAM session.

```
Device# show ethernet oam summary
Symbols:          * - Master Loopback State,  # - Slave Loopback State
Capability codes: L - Link Monitor,  R - Remote Loopback
                  U - Unidirection,  V - Variable Retrieval
  Local                        Remote
Interface       MAC Address    OUI    Mode    Capability
 Gi6/1/1       0012.7fa6.a700 00000C active      L R
```

Verifying OAM Discovery Status

The following example shows how to verify OAM discovery status of a local client and a remote peer:

```
Device# show ethernet oam discovery interface gigabitethernet0/0/1
GigabitEthernet0/0/1
Local client
------------
  Administrative configurations:
    Mode:              active
    Unidirection:      not supported
    Link monitor:      supported (on)
    Remote loopback:   not supported
    MIB retrieval:     not supported
    Mtu size:          1500
  Operational status:
Port status:       operational
    Loopback status:   no loopback
    PDU permission:    any
    PDU revision:      1
Remote client
-------------
  MAC address: 0030.96fd.6bfa
  Vendor(oui): 0x00 0x00 0x0C (cisco)
  Administrative configurations:

   Mode:              active
   Unidirection:      not supported
   Link monitor:      supported
   Remote loopback:   not supported
   MIB retrieval:     not supported
   Mtu size:          1500
```

Verifying Information OAMPDU and Fault Statistics

The following example shows how to verify statistics for information OAM PDUs and local and remote faults:

```
Device# show ethernet oam statistics interface gigabitethernet0/0/1
GigabitEthernet0/0/1
Counters:
---------
Information OAMPDU Tx                   : 588806
Information OAMPDU Rx                   : 988
Unique Event Notification OAMPDU Tx     : 0
Unique Event Notification OAMPDU Rx     : 0
Duplicate Event Notification OAMPDU TX  : 0
Duplicate Event Notification OAMPDU RX  : 0
Loopback Control OAMPDU Tx              : 1
Loopback Control OAMPDU Rx              : 0
Variable Request OAMPDU Tx              : 0
Variable Request OAMPDU Rx              : 0
Variable Response OAMPDU Tx             : 0
Variable Response OAMPDU Rx             : 0
Cisco OAMPDU Tx                         : 4
Cisco OAMPDU Rx                         : 0
Unsupported OAMPDU Tx                   : 0
Unsupported OAMPDU Rx                   : 0
Frames Lost due to OAM                  : 0
Local Faults:
-------------
0 Link Fault records
2 Dying Gasp records
Total dying gasps       : 4
Time stamp              : 00:30:39
Total dying gasps       : 3
Time stamp              : 00:32:39
0 Critical Event records
Remote Faults:
--------------
0 Link Fault records
0 Dying Gasp records
0 Critical Event records
Local event logs:
-----------------
0 Errored Symbol Period records
0 Errored Frame records
0 Errored Frame Period records
0 Errored Frame Second records
Remote event logs:
------------------
0 Errored Symbol Period records
0 Errored Frame records
0 Errored Frame Period records
0 Errored Frame Second records
```

Verifying Link Monitoring Configuration and Status

The following example shows how to verify link monitoring configuration and status on the local client. The highlighted Status field in the example shows that link monitoring status is supported and enabled (on).

```
Device# show ethernet oam status interface gigabitethernet0/0/1
GigabitEthernet0/0/1
General
-------
  Mode:                 active
```

```
  PDU max rate:          10 packets per second
  PDU min rate:          1 packet per 1 second
  Link timeout:          5 seconds
  High threshold action: no action
Link Monitoring
---------------
  Status: supported (on)
  Symbol Period Error
    Window:              1 million symbols
    Low threshold:       1 error symbol(s)
    High threshold:      none
  Frame Error
    Window:              10 x 100 milliseconds
    Low threshold:       1 error frame(s)
    High threshold:      none
Frame Period Error
    Window:              1 x 100,000 frames
    Low threshold:       1 error frame(s)
    High threshold:      none
  Frame Seconds Error
    Window:              600 x 100 milliseconds
    Low threshold:       1 error second(s)
    High threshold:      none
```

Verifying Status of a Remote OAM Client

The following example shows that the local client interface Gi6/1/1 is connected to a remote client. Note the values in the Mode and Capability fields.

```
Device# show ethernet oam summary
Symbols:          * - Master Loopback State,  # - Slave Loopback State
Capability codes: L - Link Monitor,  R - Remote Loopback
                  U - Unidirection,  V - Variable Retrieval
  Local                        Remote
Interface       MAC Address    OUI    Mode    Capability
 Gi6/1/1       0012.7fa6.a700 00000C active      L R
```

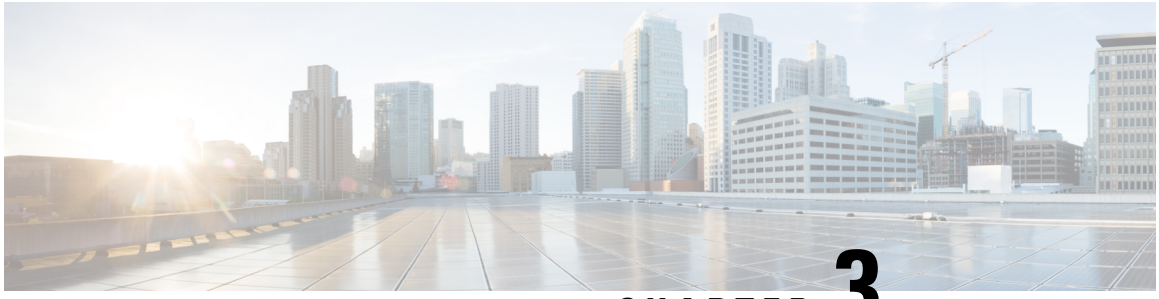

CHAPTER 3

ITU-T Y.1731 Performance Monitoring in a Service Provider Network

ITU-T Y.1731 performance monitoring provides standard-based Ethernet performance monitoring that encompasses the measurement of Ethernet frame delay, frame-delay variation, and throughput as outlined in the ITU-T Y.1731 specification and interpreted by the Metro Ethernet Forum (MEF). Service providers offer service level agreements (SLAs) that describe the level of performance customers can expect for services. This document describes the Ethernet performance management aspect of SLAs.

Prerequisites for ITU-T Y.1731 Performance Monitoring in a Service Provider Network

- IEEE-compliant connectivity fault management (CFM) must be configured and enabled for Y.1731 performance monitoring to function.

Note Y1731 is supported over Port Channel interfaces.

Restrictions for ITU-T Y.1731 Performance Monitoring in a Service Provider Network

- The frame-delay measurement message (DMM) with CFM over cross-connect on the router works only if the **control-word** command is enabled.

- When the core network has multiple paths, the Tx and Rx, DMM/DMR packets can be sent and received on different ports. If the ports belong to a different interface module (IM), time stamping can be out of sync and in certain cases the Rx value can be lower than the Tx value. This value is displayed as 0 in the raw database output. As a workaround, configure Precision Time Protocol (PTP) between the two connectivity fault management (CFM) endpoint routers.
- RSP3 module supports ASIC-based timestamping. When the sending and receiving ports of the Tx and Rx packets are on the same ASIC module, there is no dys-synchronization between the sending and receiving ports. However, if the sending and receiving ports are on different ASIC modules, the Precision Time Protocol (PTP) is to be configured between the two connectivity fault management (CFM) endpoint routers.
- Y.1731 is supported with the **rewrite**command configuration on Ethernet Flow Points (EFPs) throughout the Layer 2 circuit. However, the configuration may be in such a way that the Y1731 PDUs may be transmitted untagged. This results in the other end of the Layer 2 circuit not being able to ascertain the CoS value which determines the SLA session to which the PDUs belong. Therefore, the **rewrite** command configuration is *not* supported when CoS value is configured with IP SLA or the Y.1731 profile.
- Y.1731 performance monitoring is *not* supported in MEPs that are configured on TEFP on the RSP3 module.
- Y.1731 performance monitoring is *not* supported in MEPs that are configured on ports.
- CFM and Y.1731 performance monitoring on a port-channel is *not* supported on the RSP3 mdoule, in Cisco IOS XE Release 3.18SP and earlier.

  CFM and Y.1731performance monitoring on a port-channel is supported on the RSP3 module starting Cisco IOS XE Everest 16.5.1. The supported scale value is 500 sessions.
- LMM is *not* supported on the RSP3 module.
- Y.1731 DMM is not supported on the RSP3 platform, when there are two VLAN tags, two or more MPLS tag with control word enabled on the system.

Note In ITU-T Y1731, 1DM measurement should mandate only PTP to have clock sync between sender & receiver.

Information About ITU-T Y.1731 Performance Monitoring in a Service Provider Network

Frame Delay and Frame-Delay Variation

The Frame Delay parameter can be used for on-demand OAM measurements of frame delay and frame-delay variation. When a maintenance end point (MEP) is enabled to generate frames with frame-delay measurement (ETH-DM) information, it periodically sends frames with ETH-DM information to its peer MEP in the same maintenance entity. Peer MEPs perform frame-delay and frame-delay variation measurements through this periodic exchange during the diagnostic interval.

An MEP requires the following specific configuration information to support ETH-DM:

- MEG level—MEG level at which the MEP exists
- Priority
- Drop eligibility—marked drop ineligible
- Transmission rate
- Total interval of ETH-DM
- MEF10 frame-delay variation algorithm

A MEP transmits frames with ETH-DM information using the TxTimeStampf information element. TxTimeStampf is the time stamp for when the ETH-DM frame was sent. A receiving MEP can compare the TxTimeStampf value with the RxTimef value, which is the time the ETH-DM frame was received, and calculate one-way delay using the formula *frame delay = RxTimef – TxTimeStampf*.

One-way frame-delay measurement (1DM) requires that clocks at both the transmitting MEP and the receiving MEPs are synchronized. Measuring frame-delay variation does not require clock synchronization and the variation can be measured using 1DM or a frame-delay measurement message (DMM) and a frame-delay measurement reply (DMR) frame combination.

If it is not practical to have clocks synchronized, only two-way frame-delay measurements can be made. In this case, the MEP transmits a frame containing ETH-DM request information and the TxTimeStampf element, and the receiving MEP responds with a frame containing ETH-DM reply information and the TxTimeStampf value copied from the ETH-DM request information.

Two-way frame delay is calculated as *(RxTimeb–TxTimeStampf)–(TxTimeStampb–RxTimeStampf)*, where RxTimeb is the time that the frame with ETH-DM reply information was received. Two-way frame delay and variation can be measured using only DMM and DMR frames.

To allow more precise two-way frame-delay measurement, the MEP replying to a frame with ETH-DM request information can also include two additional time stamps in the ETH-DM reply information:

- RxTimeStampf—Time stamp of the time at which the frame with ETH-DM request information was received.
- TxTimeStampb—Time stamp of the time at which the transmitting frame with ETH-DM reply information was sent.
- The timestamping happens at the hardware level for DMM operations.

Note The frame-loss, frame-delay, and frame-delay variation measurement processes are terminated when faults related to continuity and availability occur or when known network topology changes occur.

An MIP is transparent to the frames with ETH-DM information; therefore, an MIP does not require information to support the ETH-DM function.

The figure below shows a functional overview of a typical network in which Y.1731 performance monitoring is used.

Figure 1: Y.1731 Performance Monitoring

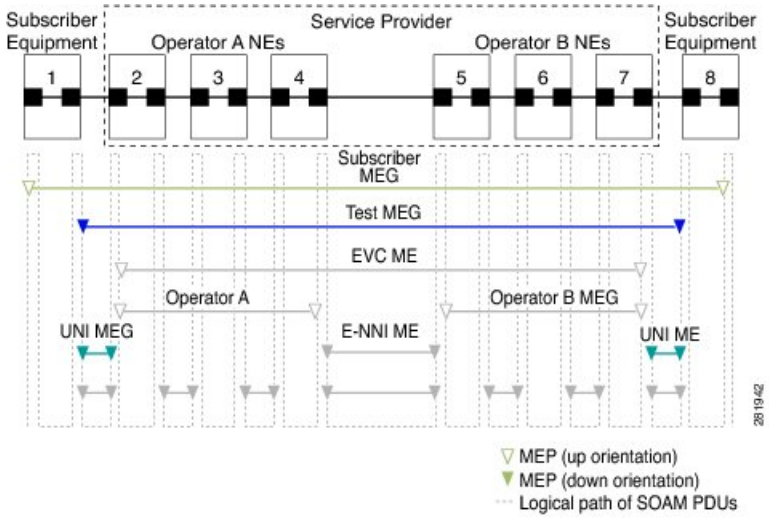

Benefits of ITU-T Y.1731 Performance Monitoring

Combined with IEEE-compliant connectivity fault management (CFM), Y.1731 performance monitoring provides a comprehensive fault management and performance monitoring solution for service providers. This comprehensive solution in turn lessens service providers' operating expenses, improves their service-level agreements (SLAs), and simplifies their operations.

Y.1731 Scalability of RSP2 and RSP3

The following sections show the scaling numbers supported for RSP2 and RSP3 modules:

CFM, XConnect, and DMM/SLM Sessions Supported with HW Offload

Table 1: Scale Numbers (CFM and IPSLA sessions (SLM/DMM))

Feature/Parameter	RSP3	RSP2
IPSLA sessions over BD (HW offload)	500	300
IPSLA sessions over XConnect (HW offload)	500	300
IPSLA sessions over EFP (HW offload)	500	300
Port Channel (HW offload)	500	300

CFM, XConnect, and DMM/SLM Sessions Supported with SW Offload

Table 2: Scale Numbers (CFM and IPSLA sessions (SLM/DMM))

Feature/Parameter	RSP3	RSP2
IPSLA sessions over BD (SW offload)	500	300
IPSLA sessions over XConnect (SW offload)	500	300
IPSLA sessions over EFP (SW offload)	500	300
Port Channel (SW offload)	500	300

How to Configure ITU-T Y.1731 Performance Monitoring in a Service Provider Network

Configuring Performance Monitoring Parameters

The following new commands were introduced that can be used to configure and display performance monitoring parameters: **debug ethernet cfm pm**, **monitor loss counters**, and **show ethernet cfm pm**.

For more information about CFM and Y.1731 performance monitoring commands, see the *Cisco IOS Carrier Ethernet Command Reference*. For more information about debug commands, see the *Cisco IOS Debug Command Reference*.

Configuration Examples for Configuring ITU-T Y.1731 Performance Monitoring Functions

Example: Configuring Performance Monitoring

For Y.1731 performance monitoring configuration examples, see *Configuring IP SLAs Metro-Ethernet 3.0 (ITU-T Y.1731) Operations*. For information about Y.1731 On-Demand and Concurrent Operations, see *Configuring IP SLAs Metro-Ethernet 3.0 (ITU-T Y.1731) Operations*.

Application of QoS Policies on ITU-T Y.1731 Egress Packets

Table 3: Feature History

Feature Name	Release Information	Feature Description
Application of QoS Policies on ITU-T Y.1731 Egress Packets	Cisco IOS XE Cupertino 17.9.1	You can now apply QoS policies on Y.1731 egress packets. Operations, Administration, and Maintenance (OAM) functions and mechanisms for Ethernet-based networks are defined in ITU-T Y.1731. With this implementation, you can prioritize OAM traffic; for example, prioritizing operational information used to detect faults and determining network performance.

The number of Y.1731 egress packets that are dropped, due to bandwidth limitation, must be reflected accurately. To facilitate the application of QoS on Y.1731 egress packets, the following requirements are implemented:

Note We recommend that you maintain sufficient free QoS labels to enable QoS for Y.1731 egress packets.

- Y.1731 performance management probe packets are subject to QoS on the measurement nodes because they have appropriate packet type of service (ToS) marking to take the same path as regular data do through the transit nodes. Packets are processed identically in the transit path.
- Y.1731 packet must bypass ingress QoS at user-network interface (UNI) and hit EQoS on the network-network interface (NNI) of endpoints.
- Ensure that Y.1731 functionalities, such as delay measurement and frame-delay measurement message (DMM) packets, are considered as transit traffic, because these packets measure the delay of green packets in the network.
- For MPLS, the CoS-EXP mapping is preserved for CPU-injected Y.1731 traffic.

Restrictions for the Application of QoS on Y.1731 Egress Packets

- In case of data traffic not marked with MPLS EXP at the imposition, all packets fall under the class-default policy-map at the egress. In such cases, if the Y.1731 sessions also have CoS 0 configured in them, then the Y.1731 packets are likely to get discarded, subject to the bandwidth availability.
- It is supported only in L2VPN (Xconnect/VPLS) services.
- It is not supported for EVC BD services.
- It is not supported with CFM Down MEP sessions.

Enabling QoS on ITU-T Y.1731 Egress Packets

Follow the steps below to apply egress QoS on ITU-T Y.1731 egress packets:

1. Execute the **platform qos-feature y1731-qos enable** command to enable QoS for Y.1731 egress packets.

Note Use the **no** form of the command to disable QoS for Y.1731 egress packets.

2. Execute the **write memory** command to save the running configuration as the startup configuration.
3. Reload the system for the configuration to take effect.

Example

```
Router#show run | sec y1731-qos
Router#configure terminal
Enter configuration commands, one per line.  End with CNTL/Z.
Router(config)#platform qos-feature y1731-qos en
Router(config)#end
```

```
Router#show run | sec y1731-qos
platform qos-feature y1731-qos enable
Router#conf t
Enter configuration commands, one per line.  End with CNTL/Z.
Router(config)#no platform qos-feature y1731-qos enable
Router(config)#end
```

Configuration Example

This example shows the configuration of Y.1731 Dela Measurement Messages (DMM)/1DM frames and Synthetic Loss Measurement (SLM)/Loss Measurement Management (LMM):

```
ip sla 1
ethernet y1731 delay DMM domain d1 evc evc10 mpid 1002 cos 4 source mpid 1001
frame size 1000
frame interval 10
ip sla schedule 1 life forever start-time now
ip sla 2
ethernet y1731 delay 1DM domain d1 evc evc10 mpid 1002 cos 0 source mpid 1001
frame size 1000
frame interval 10
ip sla schedule 2 life forever start-time now
ip sla 3
ethernet y1731 loss SLM domain d1 evc evc10 mpid 1002 cos 6 source mpid 1001
frame size 1000
frame interval 10
ip sla schedule 3 life forever start-time now
ip sla 4
ethernet y1731 loss LMM domain d1 evc evc10 mpid 1002 cos 8 source mpid 1001
frame interval 10
ip sla schedule 4 life forever start-time now
```

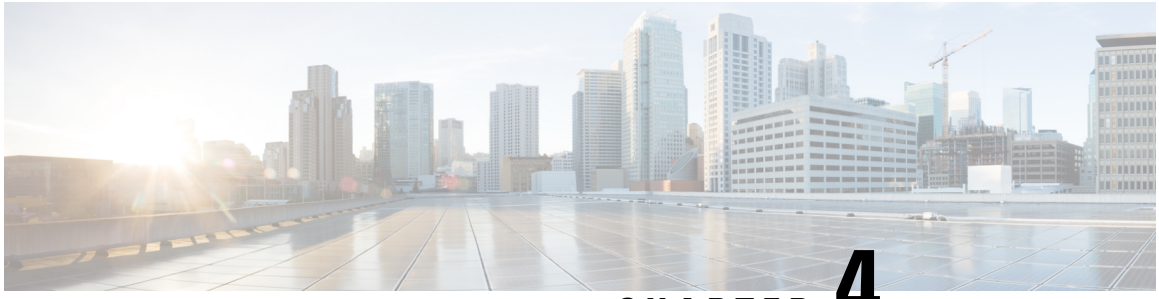

CHAPTER 4

Configuring Ethernet Connectivity Fault Management in a Service Provider Network

Ethernet Connectivity Fault Management (CFM) is an end-to-end per-service-instance Ethernet layer operations, administration, and maintenance (OAM) protocol. It includes proactive connectivity monitoring, fault verification, and fault isolation for large Ethernet metropolitan-area networks (MANs) and WANs.

The advent of Ethernet as a MAN and WAN technology imposes a new set of OAM requirements on Ethernet's traditional operations, which were centered on enterprise networks only. The expansion of Ethernet technology into the domain of service providers, where networks are substantially larger and more complex than enterprise networks and the user base is wider, makes operational management of link uptime crucial. More importantly, the timeliness in isolating and responding to a failure becomes mandatory for normal day-to-day operations, and OAM translates directly to the competitiveness of the service provider.

Prerequisites for Configuring Ethernet CFM in a Service Provider Network

Business Requirements

- Network topology and network administration have been evaluated.
- Business and service policies have been established.
- Partial Route Computation (PRC) codes have been implemented for all supported commands related to configuring High Availability (HA) on a maintenance endpoint (MEP), maintenance intermediate point (MIP), level, service instance ID, cross-check timer, cross-check, and domain.

Restrictions for Configuring Ethernet CFM in a Service Provider Network

- CFM loopback messages will not be confined within a maintenance domain according to their maintenance level. The impact of not having CFM loopback messages confined to their maintenance levels occurs at these levels:
  - Architecture—CFM layering is violated for loopback messages.
  - Deployment—A user may potentially misconfigure a network and have loopback messages succeed.
  - Security—A malicious device that recognizes devices' MAC addresses and levels may potentially explore a network topology that should be transparent.
- CFM is not fully supported on a Multiprotocol Label Switching (MPLS) provider edge (PE) device. There is no interaction between CFM and an Ethernet over MPLS (EoMPLS) pseudowire.
- CFM configuration is not supported on an EtherChannel in FastEthernet Channel (FEC) mode.
- The high availability (HA) features NFS/SSO Support in CFM 802.1ag/1.0d and ISSU Support in CFM 802.1ag/1.0d are not supported on customer edge (CE) devices.
- The NFS/SSO Support in CFM 802.1ag/1.0d feature is not supported for the traceroute and error databases.
- QinQ encapsulation is not supported on the Cisco ASR 1000 Series Aggregation Services Router for CFM for routed subinterfaces.
- TCAM entries are added in the Egress ACL region for MIP/MEP configured on TEFP. The following table lists the maximum scale of MIP/MEP configured on the node.

Level	Maximum Number of MEPs
0	239
1	239
2	159
3	239
4	159
5	159
6	119
7	239

Note Number of MIP entries is based on the number of VLANs specified in the MIP configuration. The MIP/MEP under TEFP is also inclusive in the maximum number of MEPS on the node (1024).

Information About Configuring Ethernet CFM in a Service Provider Network

Ethernet CFM

Ethernet CFM is an end-to-end per-service-instance Ethernet layer OAM protocol that includes proactive connectivity monitoring, fault verification, and fault isolation. End to end can be PE to PE or CE to CE. A service can be identified as a service provider VLAN (S-VLAN) or an EVC service.

Being an end-to-end technology is the distinction between CFM and other metro-Ethernet OAM protocols. For example, MPLS, ATM, and SONET OAM help in debugging Ethernet wires but are not always end-to-end. 802.3ah OAM is a single-hop and per-physical-wire protocol. It is not end to end or service aware.

Troubleshooting carrier networks offering Ethernet Layer 2 services is challenging. Customers contract with service providers for end-to-end Ethernet service and service providers may subcontract with operators to provide equipment and networks. Compared to enterprise networks, where Ethernet traditionally has been implemented, these constituent networks belong to distinct organizations or departments, are substantially larger and more complex, and have a wider user base. Ethernet CFM provides a competitive advantage to service providers for which the operational management of link uptime and timeliness in isolating and responding to failures is crucial to daily operations.

Benefits of Ethernet CFM

- End-to-end service-level OAM technology
- Reduced operating expense for service provider Ethernet networks
- Competitive advantage for service providers
- Supports both distribution and access network environments with the outward facing MEPs enhancement

CFM Configuration over EFP Interface with Cross Connect Feature

Ethernet Connectivity Fault Management (CFM) is an end-to-end per-service-instance Ethernet layer OAM protocol that includes proactive connectivity monitoring, fault verification, and fault isolation. Currently, Ethernet CFM supports Up facing and Down facing Maintenance Endpoints (MEPs).

For information on Ethernet Connectivity Fault Management, see http://www.cisco.com/en/US/docs/ios/12_2sr/12_2sra/feature/guide/srethcfm.html.

The CFM over EFP Interface with xconnect feature allows you to:

- Forward continuity check messages (CCM) towards the core over cross connect pseudowires.
- Receive CFM messages from the core.
- Forward CFM messages to the access side (after Continuity Check Database [CCDB] based on maintenance point [MP] filtering rules).

Restrictions for CFM Configuration over EFP Interface with Cross Connect Feature

RSP2 Module

- Configuration of CCM sampling rate for the offloaded sessions using **offload sampling** command is not supported.
- Parsing multiple organizational-specific Type Length Value (TLV) is not supported.
- Priority-tagged encapsulation type is not supported.
- Error-objects are seen on active and standby RSP after reboot when CFM is globally disabled and MIP filter is enabled.
- CFM Traceroute with (forwarding database) FDB only option is not supported on Up MEP.
- CFM CC/Ping/Traceroute for Down MEP, CFM Ping/Traceroute for Up MEP use the bypass EAID, so these packets cannot be mirrored in the egress direction. Only Up MEP CFM CC can be mirrored.
- CFM Traceroute to expired RMEPs are flooded only to port where it was last learned. CFM Traceroute for new RMEPs are not initiated on their own. However ping to both expired and new RMEPs are flooded to all EFPs in the BD.

RSP3 Module

- L2VPN VC statistics are not supported on the RSP3 module.

Customer Service Instance

A customer service instance is an Ethernet virtual connection (EVC), which is identified by an S-VLAN within an Ethernet island, and is identified by a globally unique service ID. A customer service instance can be point-to-point or multipoint-to-multipoint. The figure below shows two customer service instances. Service Instance Green is point to point; Service Instance Blue is multipoint to multipoint.

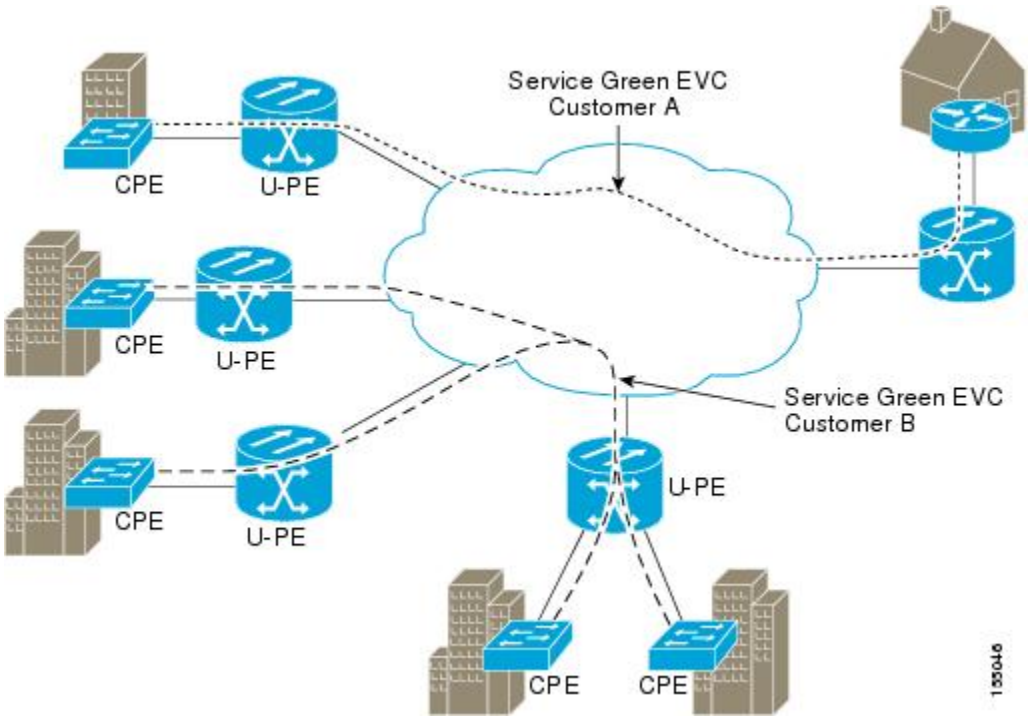

Maintenance Domain

A maintenance domain is a management space for the purpose of managing and administering a network. A domain is owned and operated by a single entity and defined by the set of ports internal to it and at its boundary. The figure below illustrates a typical maintenance domain.

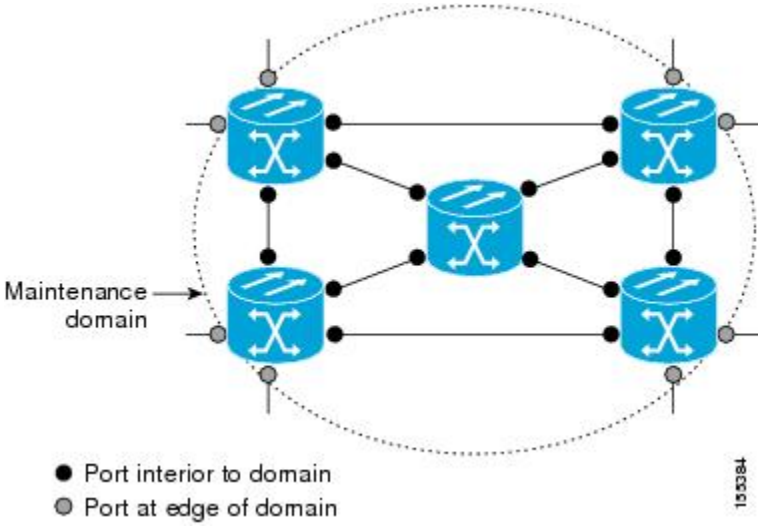

A unique maintenance level in the range of 0 to 7 is assigned to each domain by a network administrator. Levels and domain names are useful for defining the hierarchical relationship that exists among domains. The hierarchical relationship of domains parallels the structure of customer, service provider, and operator. The larger the domain, the higher the level value. For example, a customer domain would be larger than an operator

domain. The customer domain may have a maintenance level of 7 and the operator domain may have a maintenance level of 0. Typically, operators would have the smallest domains and customers the largest domains, with service provider domains between them in size. All levels of the hierarchy must operate together.

Domains should not intersect because intersecting would mean management by more than one entity, which is not allowed. Domains may nest or touch but when two domains nest, the outer domain must have a higher maintenance level than the domain nested within it. Nesting maintenance domains is useful in the business model where a service provider contracts with one or more operators to provide Ethernet service to a customer. Each operator would have its own maintenance domain and the service provider would define its domain—a superset of the operator domains. Furthermore, the customer has its own end-to-end domain which is in turn a superset of the service provider domain. Maintenance levels of various nesting domains should be communicated among the administering organizations. For example, one approach would be to have the service provider assign maintenance levels to operators.

CFM exchanges messages and performs operations on a per-domain basis. For example, running CFM at the operator level does not allow discovery of the network by the higher provider and customer levels.

Network designers decide on domains and configurations. The figure below illustrates a hierarchy of operator, service provider, and customer domains and also illustrates touching, intersecting, and nested domains.

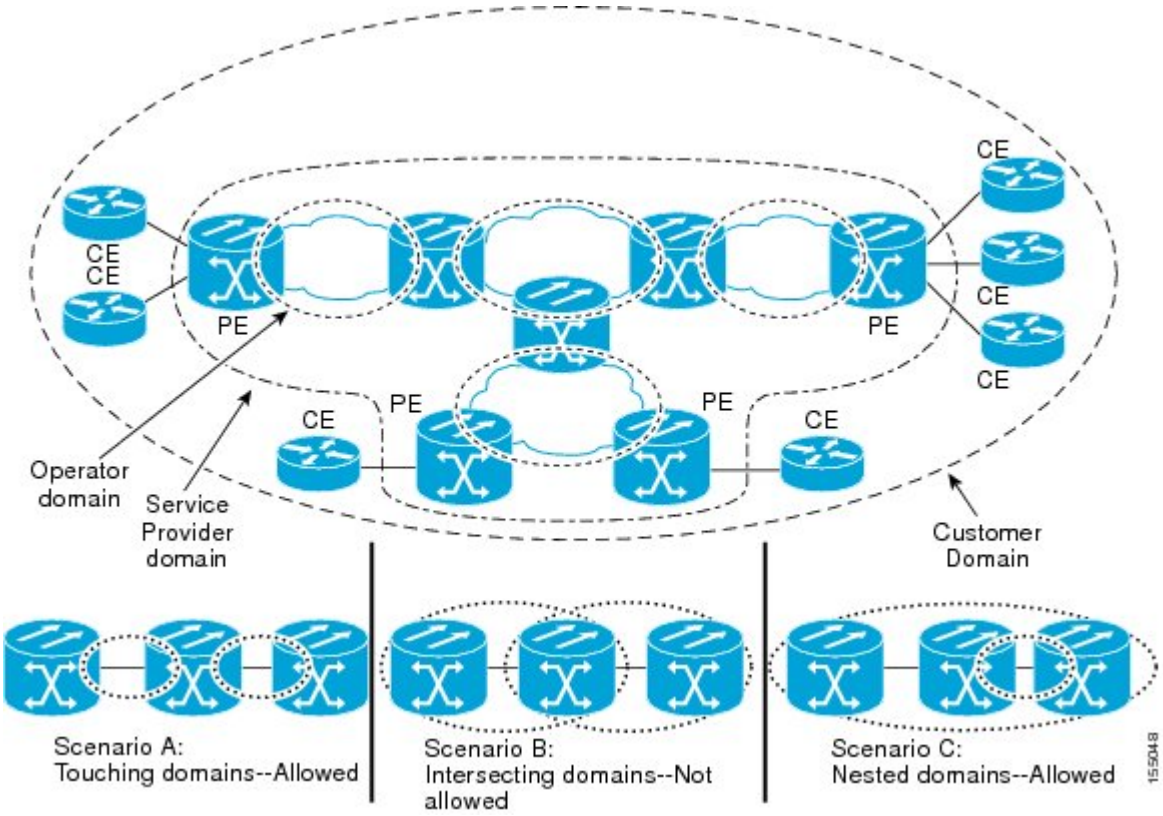

Maintenance Associations and Maintenance Points

A maintenance association (MA) identifies a service that can be uniquely identified within the maintenance domain. The CFM protocol runs within a maintenance association. A maintenance point is a demarcation point on an interface that participates in CFM within a maintenance domain. Maintenance points drop all lower-level frames and forward all higher-level frames. There are two types of maintenance points:

- Maintenance end points (MEPs) are points at the edge of the domain that define the boundaries and confine CFM messages within these boundaries. Outward facing or Down MEPs communicate through the wire side (connected to the port). Inward facing or Up MEPs communicate through the relay function side, not the wire side.

  CFM 802.1ag supports up and down per-VLAN MEPs, as well as port MEPs, which are untagged down MEPs that are not associated with a VLAN.

  Port MEPs are configured to protect a single hop and used to monitor link state through CFM. If a port MEP is not receiving continuity check messages from its peer (static remote MEP), for a specified interval, the port is put into an operational down state in which only CFM and OAM packets pass through, and all other data and control packets are dropped.

  - **Up MEP**—An up MEP sends and receives CFM frames through the relay function. It drops all CFM frames at its level or lower that come from the wire side, except traffic going to the down MEP. For CFM frames from the relay side, it processes the frames at its level and drops frames at a lower level. The MEP transparently forwards all CFM frames at a higher level, regardless of whether they are received from the relay or wire side. If the port on which MEP is configured is blocked by STP, the MEP can still send or receive CFM messages through the relay function. CFM runs at the provider maintenance level (UPE-to-UPE), specifically with up MEPs at the user network interface (UNI).

Note The device rate-limits all incoming CFM messages at a fixed rate of 500 frames per second.

  - **Down MEP**—A down MEP sends and receives CFM frames through the wire connected to the port on which the MEP is configured. It drops all CFM frames at its level or lower that come from the relay side. For CFM frames from the wire side, it processes all CFM frames at its level and drops CFM frames at lower levels except traffic going to the other lower-level down MEP. The MEP transparently forwards all CFM frames at a higher level, regardless of whether they are received from the relay or through the wire.

- Maintenance intermediate points (MIPs) are internal to a domain, not at the boundary, and respond to CFM only when triggered by traceroute and loopback messages. They forward CFM frames received from MEPs and other MIPs, drop all CFM frames at a lower level (if MIP filtering is enabled), and forward all CFM frames at a higher level and at a lower level and regardless of whether they are received from the relay or wire side. When MIP filtering is enabled, the MIP drops CFM frames at a lower level. MIPs also catalog and forward continuity check messages (CCMs), but do not respond to them.

  MIP filtering is disabled by default, and you can configure it to be enabled or disabled. When MIP filtering is disabled, all CFM frames are forwarded.

  You can manually configure a MIP or configure the device to automatically create a MIP. You can configure a MEP without a MIP. In case of a configuration conflict, manually created MIPs take precedence over automatically created MIPs.

  If port on which the MEP is configured is blocked by Spanning-Tree Protocol (STP), the MIP can receive and might respond to CFM messages from both the wire and relay side, but cannot forward any CFM messages.

Maintenance Point

A maintenance point is a demarcation point on an interface (port) that participates in CFM within a maintenance domain. Maintenance points on device ports act as filters that confine CFM frames within the bounds of a domain by dropping frames that do not belong to the correct level. Maintenance points must be explicitly configured on Cisco devices. Two classes of maintenance points exist, MEPs and MIPs.

Maintenance Endpoints

Maintenance endpoints (MEPs) have the following characteristics:

- Per maintenance domain (level) and service (S-VLAN or EVC)
- At the edge of a domain, define the boundary
- Within the bounds of a maintenance domain, confine CFM messages
- When configured to do so, proactively transmit Connectivity Fault Management (CFM) continuity check messages (CCMs)
- At the request of an administrator, transmit traceroute and loopback messages

Inward Facing MEPs

Inward facing means the MEP communicates through the Bridge Relay function and uses the Bridge-Brain MAC address. An inward facing MEP performs the following functions:

- Sends and receives CFM frames at its level through the relay function, not via the wire connected to the port on which the MEP is configured.
- Drops all CFM frames at its level (or lower level) that come from the direction of the wire.
- Processes all CFM frames at its level coming from the direction of the relay function.
- Drops all CFM frames at a lower level coming from the direction of the relay function.
- Transparently forwards all CFM frames at its level or a higher level, independent of whether they come in from the relay function side or the wire side.

Note A MEP of level L (where L is less than 7) requires a MIP of level M > L on the same port; hence, CFM frames at a level higher than the level of the MEP will be catalogued by this MIP.

- If the port on which the inward MEP is configured is blocked by Spanning-Tree Protocol, the MEP can no longer transmit or receive CFM messages.

Outward Facing MEPs for Port Channels

Outward facing means that the MEP communicates through the wire. Outward facing MEPs can be configured on port channels (using cross connect functionality). A MIP configuration at a level higher than the level of the outward facing MEP is not required.

Outward facing MEPs on port channels use the Bridge-Brain MAC address of the first member link. When port channel members change, the identities of outward facing MEPs do not have to change.

An outward facing MEP performs the following functions:

- Sends and receives CFM frames at its level via the wire connected to the port where the MEP is configured.
- Drops all CFM frames at its level (or at a lower level) that come from the direction of the relay function.
- Processes all CFM frames at its level coming from the direction of the wire.
- Drops all CFM frames at a lower level coming from the direction of the wire.
- Transparently forwards all CFM frames at levels higher than the level of the outward facing MEP, independent of whether they come in from the relay function side or the wire side.
- If the port on which the outward MEP is configured is blocked by the Spanning-Tree Protocol, the MEP can still transmit and receive CFM messages via the wire.

Maintenance Intermediate Points

MIPs have the following characteristics:

- Per maintenance domain (level) and for all S-VLANs enabled or allowed on a port.
- Internal to a domain, not at the boundary.
- CFM frames received from MEPs and other MIPs are cataloged and forwarded, using both the wire and the relay function.
- All CFM frames at a lower level are stopped and dropped, independent of whether they originate from the wire or relay function.
- All CFM frames at a higher level are forwarded, independent of whether they arrive from the wire or relay function.
- MIPs respond only when triggered by CFM traceroute and loopback messages.
- Bridge-Brain MAC addresses are used.

If the port on which a MIP is configured is blocked by Spanning-Tree Protocol, the MIP cannot receive CFM messages or relay them toward the relay function side. The MIP can, however, receive and respond to CFM messages from the wire.

A MIP has only one level associated with it and the command-line interface (CLI) does not allow you to configure a MIP for a domain that does not exist.

The figure below illustrates MEPs and MIPs at the operator, service provider, and customer levels.

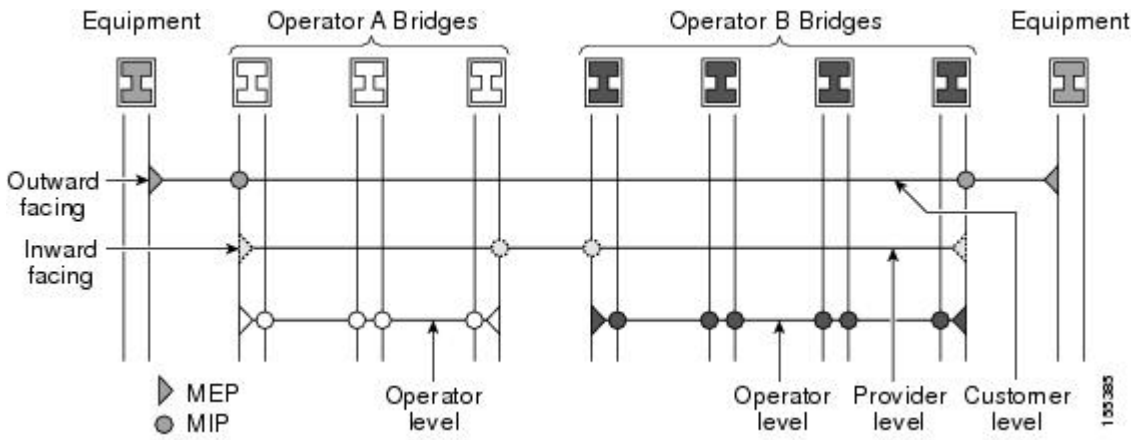

CFM Messages

CFM uses standard Ethernet frames. CFM frames are distinguishable by EtherType and for multicast messages by MAC address. CFM frames are sourced, terminated, processed, and relayed by bridges. Routers can support only limited CFM functions.

Bridges that cannot interpret CFM messages forward them as normal data frames. All CFM messages are confined to a maintenance domain and to an S-VLAN (PE-VLAN or Provider-VLAN). Three types of messages are supported:

- Continuity Check
- Loopback
- Traceroute

Continuity Check Messages

CFM CCMs are heartbeat messages exchanged periodically among MEPs. They allow MEPs to discover other MEPs within a domain and allow MIPs to discover MEPs. CCMs are confined to a domain and S-VLAN.

CFM CCMs have the following characteristics:

- Transmitted at a configurable periodic interval by MEPs. The interval can be from 10 seconds to 65535 seconds, the default is 30.
- Contains a configurable hold-time value to indicate to the receiver the validity of the message. The default is 2.5 times the transmit interval.
- Catalogued by MIPs at the same maintenance level.
- Terminated by remote MEPs at the same maintenance level.
- Unidirectional and do not solicit a response.
- Carry the status of the port on which the MEP is configured.

Loopback Messages

CFM loopback messages are unicast frames that a MEP transmits, at the request of an administrator, to verify connectivity to a particular maintenance point. A reply to a loopback message indicates whether a destination is reachable but does not allow hop-by-hop discovery of the path. A loopback message is similar in concept to an Internet Control Message Protocol (ICMP) Echo (ping) message.

A CFM loopback message can be generated on demand using the CLI. The source of a loopback message must be a MEP; the destination may be a MEP or a MIP. CFM loopback messages are unicast; replies to loopback messages also are unicast. CFM loopback messages specify the destination MAC address, VLAN, and maintenance domain.

Traceroute Messages

CFM traceroute messages are multicast frames that a MEP transmits, at the request of an administrator, to track the path (hop-by-hop) to a destination MEP. They allow the transmitting node to discover vital connectivity data about the path, and allow the discovery of all MIPs along the path that belong to the same maintenance domain. For each visible MIP, traceroute messages indicate ingress action, relay action, and egress action. Traceroute messages are similar in concept to User Datagram Protocol (UDP) traceroute messages.

Traceroute messages include the destination MAC address, VLAN, and maintenance domain and they have Time To Live (TTL) to limit propagation within the network. They can be generated on demand using the CLI. Traceroute messages are multicast; reply messages are unicast.

Cross-Check Function

The cross-check function is a timer-driven post-provisioning service verification between dynamically discovered MEPs (via CCMs) and expected MEPs (via configuration) for a service. The cross-check function verifies that all endpoints of a multipoint or point-to-point service are operational. The function supports notifications when the service is operational; otherwise it provides alarms and notifications for unexpected endpoints or missing endpoints.

The cross-check function is performed one time. You must initiate the cross-check function from the CLI every time you want a service verification.

SNMP Traps

The support provided by the Cisco software implementation of CFM traps is Cisco proprietary information. MEPs generate two types of Simple Network Management Protocol (SNMP) traps, continuity check (CC) traps and cross-check traps.

CC Traps

- MEP up—Sent when a new MEP is discovered, the status of a remote port changes, or connectivity from a previously discovered MEP is restored after interruption.
- MEP down—Sent when a timeout or last gasp event occurs.
- Cross-connect—Sent when a service ID does not match the VLAN.
- Loop—Sent when a MEP receives its own CCMs.
- Configuration error—Sent when a MEP receives a continuity check with an overlapping MPID.

Cross-Check Traps

- Service up—Sent when all expected remote MEPs are up in time.
- MEP missing—Sent when an expected MEP is down.
- Unknown MEP—Sent when a CCM is received from an unexpected MEP.

Ethernet CFM and Ethernet OAM Interaction

To understand how CFM and OAM interact, you should understand the following concepts:

Ethernet Virtual Circuit

An EVC as defined by the Metro Ethernet Forum is a port-level point-to-point or multipoint-to-multipoint Layer 2 circuit. EVC status can be used by a CE device either to find an alternative path in to the service provider network or in some cases, to fall back to a backup path over Ethernet or over another alternative service such as ATM.

OAM Manager

The OAM manager is an infrastructure element that streamlines interaction between OAM protocols. The OAM manager requires two interworking OAM protocols, in this case Ethernet CFM and Ethernet OAM. Interaction is unidirectional from the OAM manager to the CFM protocol and the only information exchanged is the user network interface (UNI) port status. Additional port status values available include

- REMOTE_EE—Remote excessive errors
- LOCAL_EE—Local excessive errors
- TEST—Either remote or local loopback

After CFM receives the port status, it communicates that status across the CFM domain.

CFM over Bridge Domains

Connectivity Fault Management (CFM) over bridge domains allows untagged CFM packets to be associated with a maintenance end point (MEP). An incoming untagged customer CFM packet has an EtherType of CFM and is mapped to an Ethernet virtual circuit (EVC) or bridge domain based on the encapsulation configured on the Ethernet flow point (EFP). The EFP is configured specifically to recognize these untagged packets.

An EFP is a logical demarcation point of an EVC on an interface and can be associated with a bridge domain. The VLAN ID is used to match and map traffic to the EFP. VLAN IDs have local significance per port similar to an ATM virtual circuit. CFM is supported on a bridge domain associated with an EFP. The association between the bridge domain and the EFP allows CFM to use the encapsulation on the EFP. All EFPs in the same bridge domain form a broadcast domain. The bridge domain ID determines the broadcast domain.

The distinction between a VLAN port and the EFP is the encapsulation. VLAN ports use a default dot1q encapsulation. For EFPs, untagged, single tagged, and double tagged encapsulation exists with dot1q and IEEE dot1ad EtherTypes. Different EFPs belonging to the same bridge domain can use different encapsulations.

Both up MEP, down MEP and MIP are supported. If an up MEP is configured under an EFP within a bridge domain, CFM messages would be routed into the bridge, and the rest members of the same bridge domain would be able to receive messages from this MEP. If a down MEP is configured, the messages will not goes into the bridge domain.

How to Set Up Ethernet CFM in a Service Provider Network

Designing CFM Domains

Note To have an operator, service provider, or customer domain is optional. A network may have a single domain or multiple domains. The steps listed here show the sequence when all three types of domains will be assigned.

Before you begin

- Knowledge and understanding of the network topology.
- Understanding of organizational entities involved in managing the network; for example, operators, service providers, network operations centers (NOCs), and customer service centers.
- Understanding of the type and scale of services to be offered.
- Agreement by all organizational entities on the responsibilities, roles, and restrictions for each organizational entity.
- Determination of the number of maintenance domains in the network.
- Determination of the nesting and disjoint maintenance domains.
- Assignment of maintenance levels and names to domains based on agreement between the service provider and operator or operators.
- Determination of whether the domain should be inward or outward.

Procedure

Step 1 Determine operator level MIPs.

Follow these steps:

- Starting at lowest operator level domain, assign a MIP at every interface internal to the operator network to be visible to CFM.
- Proceed to next higher operator level and assign MIPs.
- Verify that every port that has a MIP at a lower level does not have maintenance points at a higher level.
- Repeat steps a through d until all operator MIPs are determined.

Step 2 Determine operator level MEPs.

Follow these steps:

- Starting at the lowest operator level domain, assign a MEP at every UNI that is part of a service instance.

- Assign a MEP at the network to network interface (NNI) between operators, if there is more than one operator.
- Proceed to next higher operator level and assign MEPs.
- A port with a MIP at a lower level cannot have maintenance points at a higher level. A port with a MEP at a lower level should have either a MIP or MEP at a higher level.

Step 3 Determine service provider MIPs.

Follow these steps:

- Starting at the lowest service provider level domain, assign service provider MIPs at the NNI between operators (if more than one).
- Proceed to next higher service provider level and assign MIPs.
- A port with a MIP at a lower level cannot have maintenance points at a higher level. A port with a MEP at a lower level should not have either a MIP or a MEP at a higher level.

Step 4 Determine service provider MEPs.

Follow these steps:

- Starting at the lowest service provider level domain, assign a MEP at every UNI that is part of a service instance.
- Proceed to next higher service provider level and assign MEPs.
- A port with a MIP at a lower level cannot have maintenance points at a higher level. A port with a MEP at a lower level should have either a MIP or a MEP at a higher level.

Step 5 Determine customer MIPs.

Customer MIPs are allowed only on the UNIs at the uPEs if the service provider allows the customer to run CFM. Otherwise, the service provider can configure Cisco devices to block CFM frames.

- Configure a MIP on every uPE, at the UNI port, in the customer maintenance domain.
- Ensure the MIPs are at a maintenance level that is at least one higher than the highest level service provider domain.

Step 6 Determine customer MEPs.

Customer MEPs are on customer equipment. Assign an outward facing MEP within an outward domain at the appropriate customer level at the handoff between the service provider and the customer.

Examples

The figure below shows an example of a network with a service provider and two operators, A and B. Three domains are to be established to map to each operator and the service provider. In this example, for simplicity we assume that the network uses Ethernet transport end to end. CFM, however, can be used with other transports.

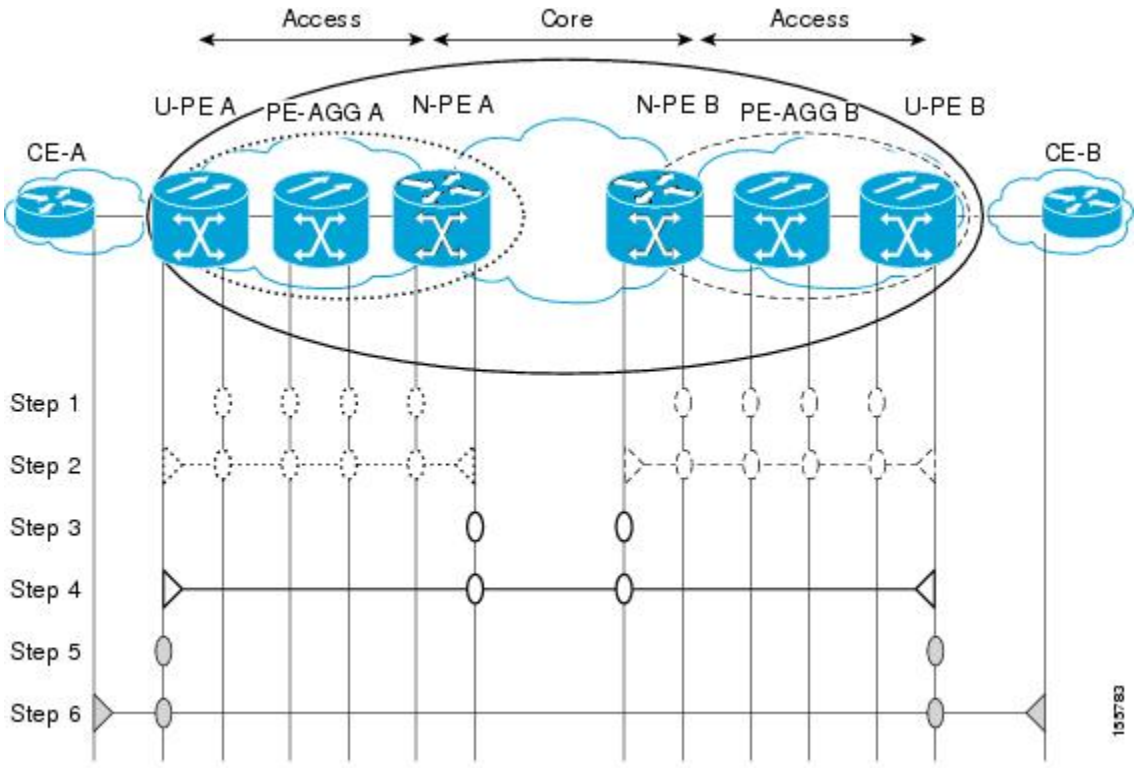

What to Do Next

After you have defined the Ethernet CFM domains, configure Ethernet CFM functionality by first provisioning the network and then provisioning service.

Configuring Ethernet CFM

Configuring Ethernet CFM consists of the following tasks:

CFM Sessions Hardware Offload

Table 4: Feature History Table

Feature Name	Release Information	Description
CFM Sessions Hardware Offload	Cisco IOS XE Bengaluru 17.5.1	This feature enables for effective CPU utilization by offloading the one second CCM interval sessions on the hardware.

Note Effective Cisco IOS XE Bengaluru 17.5.1, the router offloads the one second interval CCM sessions on hardware as well.

You can enable this feature for 1 second offload sampling rate by configuring the **offload sampling 6000** command on the router. This is **not** mandatory for all CFM sessions.

To offload CCM sessions with 1 second, you must configure the hardware offload sampling rate.

This task explains minimal basic configuration for CFM.

Procedure

Step 1 **enable**

Example:

```
Device> enable
```

Enables privileged EXEC mode.

- Enter your password if prompted.

Step 2 **configure terminal**

Example:

```
Router# configure terminal
```

Enters global configuration mode.

Step 3 **ethernet cfm domain** *domain-name* **level** *level-id*

Example:

```
Router(config)# ethernet cfm domain Customer level 7
```

Defines a CFM maintenance domain at a particular maintenance level and enters Ethernet CFM configuration mode.

Step 4 **service** *short-ma-name* **evc** *evc-name* **vlan** *vlanid* **direction down**

Example:

```
Router(config-ecfm)# service s41 evc 41 vlan 41 direction down
```

Configures a maintenance association within a maintenance domain and enters Ethernet connectivity fault management (CFM) service configuration mode.

Note The **direction down** is used only for Down or Outward-facing MEPs. For Up MEPs or Inward-facing MEPs, do not specify **direction down**.

Step 5 **continuity-check**

Example:

```
Router(config-ecfm-srv)# continuity-check
```

Enables the transmission of continuity check messages (CCMs).

Step 6 **continuity-check interval 1s**

Example:

```
Router(config-ecfm-srv)# continuity-check interval 1s
```

Configures the time period between CCMs transmission. The default interval is 10 seconds.

Step 7 **offload sampling 6000**

Example:

```
Router(config-ecfm-srv)# offload sampling 6000
```

Configures the offload sampling rate as 6000 seconds.

Step 8 **exit**

Example:

```
Router(config-ecfm-srv)# exit
```

Exits the privileged mode.

Verification for CFM Sessions Hardware Offload

```
Router#show ethernet cfm maintenance-points local detail
Local MEPs:
----------
MPID: 5000
DomainName: SMDL1
Domain ID: SMDL1
MA Name: SMA1
Level: 3
Direction: Down
EVC: evc2
Bridge Domain: 4001
Service Instance: 2
Interface: Te0/3/0
CC Offload: Yes
CC Offload Status: Succeeded
CC Offload Sampling: 6000
CC-Status: Enabled
CC Loss Threshold: 3
MAC: f84f.5783.d59b
CC Transmission Mode: Multicast
LCK-Status: Enabled
LCK Period: 60000(ms)
LCK Expiry Threshold: 3.5
Level to transmit LCK: Default
Defect Condition: No Defect
presentRDI: FALSE
AIS-Status: Enabled
AIS Period: 60000(ms)
AIS Expiry Threshold: 3.5
Level to transmit AIS: Default
Suppress Alarm configuration: Enabled
Suppressing Alarms: No
Source: Static


Total Local MEPs: 1
MIP Settings:
```

```
-------------
Local MIPs: None
```

Provisioning the Network

Provisioning the Network on the CE-A

Procedure

	Command or Action	Purpose
Step 1	**enable** **Example:** `Device> enable`	Enables privileged EXEC mode. • Enter your password if prompted.
Step 2	**configure terminal** **Example:** `Device# configure terminal`	Enters global configuration mode.
Step 3	**ethernet cfm domain** *domain-name* **level** *level-id* **Example:** `Device(config)# ethernet cfm domain Customer level 7`	Defines a CFM maintenance domain at a particular maintenance level and enters Ethernet CFM configuration mode.
Step 4	**service** *short-ma-name* **evc** *evc-name* **vlan** *vlanid* **direction down** **Example:** `Device(config-ecfm)# service s41 evc 41 vlan 41 direction down`	Configures a maintenance association within a maintenance domain and enters Ethernet connectivity fault management (CFM) service configuration mode.
Step 5	**continuity-check** **Example:** `Device(config-ecfm-srv)# continuity-check`	Configures the transmission of continuity check messages (CCMs).
Step 6	**continuity-check** [**interval** *cc-interval*] **Example:** `Device(config-ecfm-srv)# continuity-check interval 10s`	Configures the per-service parameters and sets the interval at which CCMs are transmitted.
Step 7	**exit** **Example:** `Device(config-ecfm-srv)# exit`	Returns to Ethernet connectivity fault management configuration mode.
Step 8	**mep archive-hold-time** *minutes* **Example:**	Sets the amount of time that data from a missing MEP is kept in the continuity check

	Command or Action	Purpose
	`Device(config-ecfm)# mep archive-hold-time 60`	database or that entries are held in the error database before they are purged.
Step 9	**exit** **Example:** `Device(config-ecfm)# exit`	Returns to global configuration mode.
Step 10	**ethernet cfm global** **Example:** `Device(config)# ethernet cfm global`	Enables CFM processing globally on the device.
Step 11	**ethernet cfm traceroute cache** **Example:** `Device(config)# ethernet cfm traceroute cache`	Enables caching of CFM data learned through traceroute messages.
Step 12	**ethernet cfm traceroute cache size** *entries* **Example:** `Device(config)# ethernet cfm traceroute cache size 200`	Sets the maximum size for the CFM traceroute cache table.
Step 13	**ethernet cfm traceroute cache hold-time** *minutes* **Example:** `Device(config)# ethernet cfm traceroute cache hold-time 60`	Sets the amount of time that CFM traceroute cache entries are retained.
Step 14	**snmp-server enable traps ethernet cfm cc** [**mep-up**] [**mep-down**] [**config**] [**loop**] [**cross-connect**] **Example:** `Device(config)# snmp-server enable traps ethernet cfm cc mep-up mep-down config loop cross-connect`	Enables SNMP trap generation for Ethernet CFM continuity check events.
Step 15	**snmp-server enable traps ethernet cfm crosscheck** [**mep-unknown** | **mep-missing** | **service-up**] **Example:** `Device(config)# snmp-server enable traps ethernet cfm crosscheck mep-unknown mep-missing service-up`	Enables SNMP trap generation for Ethernet CFM continuity check events in relation to the cross-check operation between statically configured MEPS and those learned via CCMs.

	Command or Action	Purpose
Step 16	**end** **Example:** `Device(config)# end`	Returns to privileged EXEC mode.

Provisioning the Network on the U-PE A

Procedure

	Command or Action	Purpose
Step 1	**enable** **Example:** `Device> enable`	Enables privileged EXEC mode. • Enter your password if prompted.
Step 2	**configure terminal** **Example:** `Device# configure terminal`	Enters global configuration mode.
Step 3	**ethernet cfm domain** *domain-name* **level** *level-id* **Example:** `Device(config)# ethernet cfm domain Customer level 7`	Defines a CFM maintenance domain at a particular maintenance level and enters Ethernet CFM configuration mode.
Step 4	**service** *short-ma-name* **evc** *evc-name* **vlan** *vlanid* **direction down** **Example:** `Device(config-ecfm)# service s41 evc 41 vlan 41 direction down`	Configures a maintenance association within a maintenance domain and enters Ethernet connectivity fault management (CFM) service configuration mode.
Step 5	**continuity-check** **Example:** `Device(config-ecfm-srv)# continuity-check`	Configures the transmission of continuity check messages (CCMs).
Step 6	**continuity-check** [**interval** *cc-interval*] **Example:** `Device(config-ecfm-srv)# continuity-check interval 10s`	Configures the per-service parameters and sets the interval at which CCMs are transmitted.
Step 7	**exit** **Example:** `Device(config-ecfm-srv)# exit`	Returns to Ethernet connectivity fault management configuration mode.

	Command or Action	Purpose
Step 8	**mep archive-hold-time** *minutes* **Example:** `Device(config-ecfm)# mep archive-hold-time 60`	Sets the amount of time that data from a missing MEP is kept in the continuity check database or that entries are held in the error database before they are purged.
Step 9	**exit** **Example:** `Device(config-ecfm)# exit`	Returns to global configuration mode.
Step 10	**ethernet cfm global** **Example:** `Device(config)# ethernet cfm global`	Enables CFM processing globally on the device.
Step 11	**ethernet cfm traceroute cache** **Example:** `Device(config)# ethernet cfm traceroute cache`	Enables caching of CFM data learned through traceroute messages.
Step 12	**ethernet cfm traceroute cache size** *entries* **Example:** `Device(config)# ethernet cfm traceroute cache size 200`	Sets the maximum size for the CFM traceroute cache table.
Step 13	**ethernet cfm traceroute cache hold-time** *minutes* **Example:** `Device(config)# ethernet cfm traceroute cache hold-time 60`	Sets the amount of time that CFM traceroute cache entries are retained.
Step 14	**interface** *type number* **Example:** `Device(config)# interface gigabitethernet0/0/2`	Specifies an interface and enters interface configuration mode.
Step 15	**service instance** *id* **ethernet** [*evc-name*] **Example:** `Device(config-if)# service instance 333 ethernet evc1`	Configures an Ethernet service instance on an interface and enters Ethernet service configuration mode.
Step 16	**encapsulation** *encapsulation-type* **Example:**	Sets the encapsulation method used by the interface.

	Command or Action	Purpose
	`Device(config-if-srv)# encapsulation dot1q 5`	
Step 17	**bridge-domain** *bridge-id* **Example:** `Device(config-if-srv)# bridge-domain 100`	Binds a service instance to a bridge domain instance.
Step 18	**cfm mip level** { *level* } **Example:** `Device(config-if-srv)#cfm mip level 4`	Creates a MIP and sets the maintenance level number.
Step 19	**exit** **Example:** `Device(config-if-srv)# exit`	Returns to interface configuration mode.
Step 20	**exit** **Example:** `Device(config-if)# exit`	Returns to global configuration mode.
Step 21	**snmp-server enable traps ethernet cfm cc** [**mep-up**] [**mep-down**] [**config**] [**loop**] [**cross-connect**] **Example:** `Device(config)# snmp-server enable traps ethernet cfm cc mep-up mep-down config loop cross-connect`	Enables SNMP trap generation for Ethernet CFM mep-up, mep-down, config, loop, and cross-connect events.
Step 22	**snmp-server enable traps ethernet cfm crosscheck** [**mep-unknown** | **mep-missing** | **service-up**] **Example:** `Device(config)# snmp-server enable traps ethernet cfm crosscheck mep-unknown mep-missing service-up`	Enables SNMP trap generation for Ethernet CFM mep-unknown, mep-missing, and service-up continuity check events in relation to the cross-check operation between statically configured MEPs and those learned via CCMs.
Step 23	**end** **Example:** `Device(config)# end`	Returns to privileged EXEC mode.

Provisioning the Network on the PE-AGG A

Procedure

	Command or Action	Purpose
Step 1	**enable** **Example:** `Device> enable`	Enables privileged EXEC mode. • Enter your password if prompted.
Step 2	**configure terminal** **Example:** `Device# configure terminal`	Enters global configuration mode.
Step 3	**ethernet cfm domain** *domain-name* **level** *level-id* **Example:** `Device(config)# ethernet cfm domain Customer level 7`	Defines a CFM maintenance domain at a particular maintenance level and enters Ethernet CFM configuration mode.
Step 4	**service** *short-ma-name* **evc** *evc-name* **vlan** *vlanid* **direction down** **Example:** `Device(config-ecfm)# service s41 evc 41 vlan 41 direction down`	Configures a maintenance association within a maintenance domain and enters Ethernet connectivity fault management (CFM) service configuration mode.
Step 5	**continuity-check** **Example:** `Device(config-ecfm-srv)# continuity-check`	Configures the transmission of continuity check messages (CCMs).
Step 6	**continuity-check** [**interval** *cc-interval*] **Example:** `Device(config-ecfm-srv)# continuity-check interval 10s`	Configures the per-service parameters and sets the interval at which CCMs are transmitted.
Step 7	**exit** **Example:** `Device(config-ecfm-srv)# exit`	Returns to Ethernet connectivity fault management configuration mode.
Step 8	**mep archive-hold-time** *minutes* **Example:** `Device(config-ecfm)# mep archive-hold-time 65`	Sets the amount of time that data from a missing MEP is kept in the continuity check database or that entries are held in the error database before they are purged.

	Command or Action	Purpose
Step 9	**exit** **Example:** `Device(config-ecfm)# exit`	Returns the CLI to global configuration mode.
Step 10	**ethernet cfm global** **Example:** `Device(config)# ethernet cfm global`	Enables CFM processing globally on the device.
Step 11	**interface** *type number* **Example:** `Device(config)# interface gigabitethernet0/0/2`	Specifies an interface and enters interface configuration mode.
Step 12	**service instance** *id* **ethernet** [*evc-name*] **Example:** `Device(config-if)# service instance 333 ethernet evc1`	Configures an Ethernet service instance on an interface and enters Ethernet service configuration mode.
Step 13	**encapsulation** *encapsulation-type* **Example:** `Device(config-if-srv)# encapsulation dot1q 5`	Sets the encapsulation method used by the interface.
Step 14	**bridge-domain** *bridge-id* **Example:** `Device(config-if-srv)# bridge-domain 100`	Binds a service instance to a bridge domain instance.
Step 15	**cfm mip level** *level* **Example:** `Device(config-if-srv)#cfm mip level 4`	Creates a MIP and sets the maintenance level number.
Step 16	**end** **Example:** `Device(config-if)# end`	Returns to privileged EXEC mode.

Provisioning the Network on the N-PE A

Procedure

	Command or Action	Purpose
Step 1	**enable** **Example:** `Device> enable`	Enables privileged EXEC mode. • Enter your password if prompted.
Step 2	**configure terminal** **Example:** `Device# configure terminal`	Enters global configuration mode.
Step 3	**ethernet cfm domain** *domain-name* **level** *level-id* **Example:** `Device(config)# ethernet cfm domain Customer level 7`	Defines a CFM maintenance domain at a particular maintenance level and enters Ethernet CFM configuration mode.
Step 4	**service** *short-ma-name* **evc** *evc-name* **vlan** *vlanid* **direction down** **Example:** `Device(config-ecfm)# service s41 evc 41 vlan 41 direction down`	Configures a maintenance association within a maintenance domain and enters Ethernet connectivity fault management (CFM) service configuration mode.
Step 5	**continuity-check** **Example:** `Device(config-ecfm-srv)# continuity-check`	Configures the transmission of continuity check messages (CCMs).
Step 6	**continuity-check** [**interval** *cc-interval*] **Example:** `Device(config-ecfm-srv)# continuity-check interval 10s`	Configures the per-service parameters and sets the interval at which CCMs are transmitted.
Step 7	**exit** **Example:** `Device(config-ecfm-srv)# exit`	Returns to Ethernet connectivity fault management configuration mode.
Step 8	**ethernet cfm global** **Example:** `Device(config)# ethernet cfm global`	Enables CFM processing globally on the device.

	Command or Action	Purpose
Step 9	**ethernet cfm traceroute cache** **Example:** `Device(config)# ethernet cfm traceroute cache`	Enables caching of CFM data learned through traceroute messages.
Step 10	**ethernet cfm traceroute cache size** *entries* **Example:** `Device(config)# ethernet cfm traceroute cache size 200`	Sets the maximum size for the CFM traceroute cache table.
Step 11	**ethernet cfm traceroute cache hold-time** *minutes* **Example:** `Device(config)# ethernet cfm traceroute cache hold-time 60`	Sets the amount of time that CFM traceroute cache entries are retained.
Step 12	**interface** *type number* **Example:** `Device(config)# interface gigabitethernet0/0/2`	Specifies an interface and enters interface configuration mode.
Step 13	**service instance** *id* **ethernet** [*evc-name*] **Example:** `Device(config-if)# service instance 333 ethernet evc1`	Configures an Ethernet service instance on an interface and enters Ethernet service configuration mode.
Step 14	**encapsulation** *encapsulation-type* **Example:** `Device(config-if-srv)# encapsulation dot1q 5`	Sets the encapsulation method used by the interface.
Step 15	**bridge-domain** *bridge-id* **Example:** `Device(config-if-srv)# bridge-domain 100`	Binds a service instance to a bridge domain instance.
Step 16	**cfm mip level** *level* **Example:** `Device(config-if-srv)#cfm mip level 4`	Creates a MIP and sets the maintenance level number.
Step 17	**exit** **Example:**	Returns to interface configuration mode.

	Command or Action	Purpose
	`Device(config-if-srv)# exit`	
Step 18	**exit** **Example:** `Device(config-if)# exit`	Returns to global configuration mode.
Step 19	**snmp-server enable traps ethernet cfm cc** [**mep-up**] [**mep-down**] [**config**] [**loop**] [**cross-connect**] **Example:** `Device(config)# snmp-server enable traps ethernet cfm cc mep-up mep-down config loop cross-connect`	Enables SNMP trap generation for Ethernet CFM mep-up, mep-down, config, loop, and cross-connect events.
Step 20	**snmp-server enable traps ethernet cfm crosscheck** [**mep-unknown** | **mep-missing** | **service-up**] **Example:** `Device(config)# snmp-server enable traps ethernet cfm crosscheck mep-unknown mep-missing service-up`	Enables SNMP trap generation for Ethernet CFM mep-unknown, mep-missing, and service-up continuity check events in relation to the cross-check operation between statically configured MEPs and those learned via CCMs.
Step 21	**end** **Example:** `Device(config)# end`	Returns to privileged EXEC mode.

Provisioning the Network on the CE-B

Procedure

	Command or Action	Purpose
Step 1	**enable** **Example:** `Device> enable`	Enables privileged EXEC mode. • Enter your password if prompted.
Step 2	**configure terminal** **Example:** `Device# configure terminal`	Enters global configuration mode.
Step 3	**ethernet cfm domain** *domain-name* **level** *level-id* **Example:**	Defines a CFM maintenance domain at a particular maintenance level and enters Ethernet CFM configuration mode.

	Command or Action	Purpose
	`Device(config)# ethernet cfm domain Customer level 7`	
Step 4	**service** *short-ma-name* **evc** *evc-name* **vlan** *vlanid* **direction down** **Example:** `Device(config-ecfm)# service s41 evc 41 vlan 41 direction down`	Configures a maintenance association within a maintenance domain and enters Ethernet connectivity fault management (CFM) service configuration mode.
Step 5	**continuity-check** **Example:** `Device(config-ecfm-srv)# continuity-check`	Configures the transmission of continuity check messages (CCMs).
Step 6	**continuity-check** [**interval** *cc-interval*] **Example:** `Device(config-ecfm-srv)# continuity-check interval 10s`	Configures the per-service parameters and sets the interval at which CCMs are transmitted.
Step 7	**exit** **Example:** `Device(config-ecfm-srv)# exit`	Returns to Ethernet connectivity fault management configuration mode.
Step 8	**mep archive-hold-time** *minutes* **Example:** `Device(config-ecfm)# mep archive-hold-time 60`	Sets the amount of time that data from a missing MEP is kept in the continuity check database or that entries are held in the error database before they are purged.
Step 9	**exit** **Example:** `Device(config-ecfm)# exit`	Returns to global configuration mode.
Step 10	**ethernet cfm global** **Example:** `Device(config)# ethernet cfm global`	Enables CFM processing globally on the device.
Step 11	**ethernet cfm traceroute cache** **Example:** `Device(config)# ethernet cfm traceroute cache`	Enables caching of CFM data learned through traceroute messages.
Step 12	**ethernet cfm traceroute cache size** *entries* **Example:** `Device(config)# ethernet cfm traceroute cache size 200`	Sets the maximum size for the CFM traceroute cache table.

	Command or Action	Purpose
Step 13	**ethernet cfm traceroute cache hold-time** *minutes* **Example:** `Device(config)# ethernet cfm traceroute cache hold-time 60`	Sets the amount of time that CFM traceroute cache entries are retained.
Step 14	**snmp-server enable traps ethernet cfm cc** [**mep-up**] [**mep-down**] [**config**] [**loop**] [**cross-connect**] **Example:** `Device(config)# snmp-server enable traps ethernet cfm cc mep-up mep-down config loop cross-connect`	Enables SNMP trap generation for Ethernet CFM mep-up, mep-down, config, loop, and cross-connect events.
Step 15	**snmp-server enable traps ethernet cfm crosscheck** [**mep-unknown** | **mep-missing** | **service-up**] **Example:** `Device(config)# snmp-server enable traps ethernet cfm crosscheck mep-unknown mep-missing service-up`	Enables SNMP trap generation for Ethernet CFM mep-unknown, mep-missing, and service-up continuity check events in relation to the cross-check operation between statically configured MEPs and those learned via CCMs.
Step 16	**end** **Example:** `Device(config)# end#`	Returns to privileged EXEC mode.

Provisioning the Network on the U-PE B

Procedure

	Command or Action	Purpose
Step 1	**enable** **Example:** `Device> enable`	Enables privileged EXEC mode. • Enter your password if prompted.
Step 2	**configure terminal** **Example:** `Device# configure terminal`	Enters global configuration mode.
Step 3	**ethernet cfm domain** *domain-name* **level** *level-id* **Example:** `Device(config)# ethernet cfm domain Customer level 7`	Defines a CFM maintenance domain at a particular maintenance level and enters Ethernet CFM configuration mode.

	Command or Action	Purpose
Step 4	**service** *short-ma-name* **evc** *evc-name* **vlan** *vlanid* **direction down** **Example:** `Device(config-ecfm)# service s41 evc 41 vlan 41 direction down`	Configures a maintenance association within a maintenance domain and enters Ethernet connectivity fault management (CFM) service configuration mode.
Step 5	**continuity-check** **Example:** `Device(config-ecfm-srv)# continuity-check`	Configures the transmission of continuity check messages (CCMs).
Step 6	**continuity-check** [**interval** *cc-interval*] **Example:** `Device(config-ecfm-srv)# continuity-check interval 10s`	Configures the per-service parameters and sets the interval at which CCMs are transmitted.
Step 7	**exit** **Example:** `Device(config-ecfm-srv)# exit`	Returns to Ethernet connectivity fault management configuration mode.
Step 8	**mep archive-hold-time** *minutes* **Example:** `Device(config-ecfm)# mep archive-hold-time 60`	Sets the amount of time that data from a missing MEP is kept in the continuity check database or that entries are held in the error database before they are purged.
Step 9	**exit** **Example:** `Device(config-ecfm)# exit`	Returns to global configuration mode.
Step 10	**ethernet cfm global** **Example:** `Device(config)# ethernet cfm global`	Enables CFM processing globally on the device.
Step 11	**ethernet cfm traceroute cache** **Example:** `Device(config)# ethernet cfm traceroute cache`	Enables caching of CFM data learned through traceroute messages.
Step 12	**ethernet cfm traceroute cache size** *entries* **Example:** `Device(config)# ethernet cfm traceroute cache size 200`	Sets the maximum size for the CFM traceroute cache table.
Step 13	**ethernet cfm traceroute cache hold-time** *minutes* **Example:**	Sets the amount of time that CFM traceroute cache entries are retained.

	Command or Action	Purpose
	`Device(config)# ethernet cfm traceroute cache hold-time 60`	
Step 14	**interface** *type number* **Example:** `Device(config)# interface gigabitethernet0/0/2`	Specifies an interface and enters interface configuration mode.
Step 15	**service instance** *id* **ethernet** [*evc-name*] **Example:** `Device(config-if)# service instance 333 ethernet evc1`	Configures an Ethernet service instance on an interface and enters Ethernet service configuration mode.
Step 16	**encapsulation** *encapsulation-type* **Example:** `Device(config-if-srv)# encapsulation dot1q 5`	Sets the encapsulation method used by the interface.
Step 17	**bridge-domain** *bridge-id* **Example:** `Device(config-if-srv)# bridge-domain 100`	Binds a service instance to a bridge domain instance.
Step 18	**cfm mip level** *level* **Example:** `Device(config-if-srv)#cfm mip level 4`	Creates a MIP and sets the maintenance level number.
Step 19	**exit** **Example:** `Device(config-if-srv)# exit`	Returns to interface configuration mode.
Step 20	**exit** **Example:** `Device(config-if)# exit`	Returns to global configuration mode.
Step 21	**snmp-server enable traps ethernet cfm cc** [**mep-up**] [**mep-down**] [**config**] [**loop**] [**cross-connect**] **Example:** `Device(config)# snmp-server enable traps ethernet cfm cc mep-up mep-down config loop cross-connect`	Enables SNMP trap generation for Ethernet CFM mep-up, mep-down, config, loop, and cross-connect events.
Step 22	**snmp-server enable traps ethernet cfm crosscheck** [**mep-unknown** | **mep-missing** | **service-up**] **Example:**	Enables SNMP trap generation for Ethernet CFM mep-unknown, mep-missing, and service-up continuity check events in relation to the cross-check operation between statically configured MEPs and those learned via CCMs.

	Command or Action	Purpose
	`Device(config)# snmp-server enable traps ethernet cfm crosscheck mep-unknown mep-missing service-up`	
Step 23	**end** **Example:** `Device(config)# end`	Returns to privileged EXEC mode.

Provisioning the Network on the PE-AGG B

Procedure

	Command or Action	Purpose
Step 1	**enable** **Example:** `Device> enable`	Enables privileged EXEC mode. • Enter your password if prompted.
Step 2	**configure terminal** **Example:** `Device# configure terminal`	Enters global configuration mode.
Step 3	**ethernet cfm domain** *domain-name* **level** *level-id* **Example:** `Device(config)# ethernet cfm domain Customer level 7`	Defines a CFM maintenance domain at a particular maintenance level and enters Ethernet CFM configuration mode.
Step 4	**service** *short-ma-name* **evc** *evc-name* **vlan** *vlanid* **direction down** **Example:** `Device(config-ecfm)# service s41 evc 41 vlan 41 direction down`	Configures a maintenance association within a maintenance domain and enters Ethernet connectivity fault management (CFM) service configuration mode.
Step 5	**continuity-check** **Example:** `Device(config-ecfm-srv)# continuity-check`	Configures the transmission of continuity check messages (CCMs).
Step 6	**continuity-check** [**interval** *cc-interval*] **Example:** `Device(config-ecfm-srv)# continuity-check interval 10s`	Configures the per-service parameters and sets the interval at which CCMs are transmitted.
Step 7	**exit** **Example:** `Device(config-ecfm-srv)# exit`	Returns to Ethernet connectivity fault management configuration mode.

	Command or Action	Purpose
Step 8	**mep archive-hold-time** *minutes* **Example:** `Device(config-ecfm)# mep archive-hold-time 65`	Sets the amount of time that data from a missing MEP is kept in the continuity check database or that entries are held in the error database before they are purged.
Step 9	**exit** **Example:** `Device(config-ecfm)# exit`	Returns to global configuration mode.
Step 10	**ethernet cfm global** **Example:** `Device(config)# ethernet cfm global`	Enables CFM processing globally on the device.
Step 11	**interface** *type number* **Example:** `Device(config)# interface gigabitethernet0/0/2`	Specifies an interface and enters interface configuration mode.
Step 12	**service instance** *id* **ethernet** [*evc-name*] **Example:** `Device(config-if)# service instance 333 ethernet evc1`	Configures an Ethernet service instance on an interface and enters Ethernet service configuration mode.
Step 13	**encapsulation** *encapsulation-type* **Example:** `Device(config-if-srv)# encapsulation dot1q 5`	Sets the encapsulation method used by the interface.
Step 14	**bridge-domain** *bridge-id* **Example:** `Device(config-if-srv)# bridge-domain 100`	Binds a service instance to a bridge domain instance.
Step 15	**cfm mip level** *level* **Example:** `Device(config-if-srv)#cfm mip level 4`	Creates a MIP and sets the maintenance level number.
Step 16	**end** **Example:** `Device(config-if-srv)# end`	Returns to privileged EXEC mode.

Provisioning the Network on the N-PE B

Procedure

	Command or Action	Purpose
Step 1	**enable** **Example:** `Device> enable`	Enables privileged EXEC mode. • Enter your password if prompted.
Step 2	**configure terminal** **Example:** `Device# configure terminal`	Enters global configuration mode.
Step 3	**ethernet cfm domain** *domain-name* **level** *level-id* **Example:** `Device(config)# ethernet cfm domain Customer level 7`	Defines a CFM maintenance domain at a particular maintenance level and enters Ethernet CFM configuration mode.
Step 4	**service** *short-ma-name* **evc** *evc-name* **vlan** *vlanid* **direction down** **Example:** `Device(config-ecfm)# service s41 evc 41 vlan 41 direction down`	Configures a maintenance association within a maintenance domain and enters Ethernet connectivity fault management (CFM) service configuration mode.
Step 5	**continuity-check** **Example:** `Device(config-ecfm-srv)# continuity-check`	Configures the transmission of continuity check messages (CCMs).
Step 6	**continuity-check** [**interval** *cc-interval*] **Example:** `Device(config-ecfm-srv)# continuity-check interval 10s`	Configures the per-service parameters and sets the interval at which CCMs are transmitted.
Step 7	**exit** **Example:** `Device(config-ecfm-srv)# exit`	Returns to Ethernet connectivity fault management configuration mode.
Step 8	**mep archive-hold-time** *minutes* **Example:** `Device(config-ecfm)# mep archive-hold-time 60`	Sets the amount of time that data from a missing MEP is kept in the continuity check database or that entries are held in the error database before they are purged.
Step 9	**exit** **Example:** `Device(config-ecfm)# exit`	Returns to global configuration mode.

	Command or Action	Purpose
Step 10	**ethernet cfm global** **Example:** `Device(config)# ethernet cfm global`	Enables CFM processing globally on the device.
Step 11	**ethernet cfm traceroute cache** **Example:** `Device(config)# ethernet cfm traceroute cache`	Enables caching of CFM data learned through traceroute messages.
Step 12	**ethernet cfm traceroute cache size** *entries* **Example:** `Device(config)# ethernet cfm traceroute cache size 200`	Sets the maximum size for the CFM traceroute cache table.
Step 13	**ethernet cfm traceroute cache hold-time** *minutes* **Example:** `Device(config)# ethernet cfm traceroute cache hold-time 60`	Sets the amount of time that CFM traceroute cache entries are retained.
Step 14	**interface** *type number* **Example:** `Device(config)# interface gigabitethernet0/0/2`	Specifies an interface and enters interface configuration mode.
Step 15	**service instance** *id* **ethernet** [*evc-name*] **Example:** `Device(config-if)# service instance 333 ethernet evc1`	Configures an Ethernet service instance on an interface and enters Ethernet service configuration mode.
Step 16	**encapsulation** *encapsulation-type* **Example:** `Device(config-if-srv)# encapsulation dot1q 5`	Sets the encapsulation method used by the interface.
Step 17	**bridge-domain** *bridge-id* **Example:** `Device(config-if-srv)# bridge-domain 100`	Binds a service instance to a bridge domain instance.
Step 18	**cfm mip level** *level* **Example:** `Device(config-if-srv)#cfm mip level 4`	Creates a MIP and sets the maintenance level number.
Step 19	**exit** **Example:**	Returns to interface configuration mode.

	Command or Action	Purpose
	`Device(config-if-srv)# exit`	
Step 20	**exit** **Example:** `Device(config-if)# exit`	Returns to global configuration mode.
Step 21	**snmp-server enable traps ethernet cfm cc** [**mep-up**] [**mep-down**] [**config**] [**loop**] [**cross-connect**] **Example:** `Device(config)# snmp-server enable traps ethernet cfm cc mep-up mep-down config loop cross-connect`	Enables SNMP trap generation for Ethernet CFM mep-up, mep-down, config, loop, and cross-connect events.
Step 22	**snmp-server enable traps ethernet cfm crosscheck** [**mep-unknown** | **mep-missing** | **service-up**] **Example:** `Device(config)# snmp-server enable traps ethernet cfm crosscheck mep-unknown mep-missing service-up`	Enables SNMP trap generation for Ethernet CFM mep-unknown, mep-missing, and service-up continuity check events in relation to the cross-check operation between statically configured MEPs and those learned via CCMs.
Step 23	**end** **Example:** `Device(config)# end`	Returns to privileged EXEC mode.

Provisioning Service

Provisioning Service on the CE-A

Perform this task to set up service for Ethernet CFM. Optionally, when this task is completed, you may configure and enable the cross-check function. To perform this optional task, see “Configuring and Enabling Cross-Checking for an Inward Facing MEP on the U PE-A”.

Procedure

	Command or Action	Purpose
Step 1	**enable** **Example:** `Device> enable`	Enables privileged EXEC mode. • Enter your password if prompted.
Step 2	**configure terminal** **Example:** `Device# configure terminal`	Enters global configuration mode.

	Command or Action	Purpose
Step 3	**ethernet cfm domain** *domain-name* **level** *level-id* **Example:** `Device(config)# ethernet cfm domain Customer level 7`	Defines a CFM maintenance domain at a particular maintenance level and enters Ethernet CFM configuration mode.
Step 4	**service** *short-ma-name* **evc** *evc-name* **vlan** *vlanid* **direction down** **Example:** `Device(config-ecfm)# service s41 evc 41 vlan 41 direction down`	Configures a maintenance association within a maintenance domain and enters Ethernet connectivity fault management (CFM) service configuration mode.
Step 5	**continuity-check** **Example:** `Device(config-ecfm-srv)# continuity-check`	Configures the transmission of continuity check messages (CCMs).
Step 6	**continuity-check** [**interval** *cc-interval*] **Example:** `Device(config-ecfm-srv)# continuity-check interval 10s`	Configures the per-service parameters and sets the interval at which CCMs are transmitted.
Step 7	**exit** **Example:** `Device(config-ecfm-srv)# exit`	Returns to Ethernet connectivity fault management configuration mode.
Step 8	**mep archive-hold-time** *minutes* **Example:** `Device(config-ecfm)# mep archive-hold-time 60`	Sets the amount of time that data from a missing MEP is kept in the continuity check database or that entries are held in the error database before they are purged.
Step 9	**exit** **Example:** `Device(config-ecfm)# exit`	Returns to global configuration mode.
Step 10	**ethernet cfm global** **Example:** `Device(config)# ethernet cfm global`	Enables CFM processing globally on the device.
Step 11	**ethernet cfm traceroute cache** **Example:** `Device(config)# ethernet cfm traceroute cache`	Enables caching of CFM data learned through traceroute messages.
Step 12	**ethernet cfm traceroute cache size** *entries* **Example:**	Sets the maximum size for the CFM traceroute cache table.

	Command or Action	Purpose
	`Device(config)# ethernet cfm traceroute cache size 200`	
Step 13	**ethernet cfm traceroute cache hold-time** *minutes* **Example:** `Device(config)# ethernet cfm traceroute cache hold-time 60`	Sets the amount of time that CFM traceroute cache entries are retained.
Step 14	**interface** *type number* **Example:** `Device(config)# interface gigabitethernet0/0/3`	Specifies an interface and enters interface configuration mode.
Step 15	**service instance** *id* **ethernet** [*evc-name*] **Example:** `Device(config-if)# service instance 333 ethernet evc1`	Configures an Ethernet service instance on an interface and enters Ethernet service configuration mode.
Step 16	**encapsulation** *encapsulation-type* **Example:** `Device(config-if-srv)# encapsulation dot1q 5`	Sets the encapsulation method used by the interface.
Step 17	**bridge-domain** *bridge-id* **Example:** `Device(config-if-srv)# bridge-domain 100`	Binds a service instance to a bridge domain instance.
Step 18	**cfm mep domain** *domain-name* **mpid** *id* **Example:** `Device(config-if-srv)# cfm mep domain L4 mpid 4001`	Configures the MEP domain and the ID.
Step 19	**end** **Example:** `Device(config-if-srv)# end`	Returns to privileged EXEC mode.

Provisioning Service on the U-PE A

Procedure

	Command or Action	Purpose
Step 1	**enable** **Example:** `Device> enable`	Enables privileged EXEC mode. • Enter your password if prompted.

	Command or Action	Purpose
Step 2	**configure terminal** **Example:** `Device# configure terminal`	Enters global configuration mode.
Step 3	**ethernet cfm domain** *domain-name* **level** *level-id* **Example:** `Device(config)# ethernet cfm domain Customer level 7`	Defines a CFM maintenance domain at a particular maintenance level and enters Ethernet CFM configuration mode.
Step 4	**service** *short-ma-name* **evc** *evc-name* **vlan** *vlanid* **direction down** **Example:** `Device(config-ecfm)# service s41 evc 41 vlan 41 direction down`	Configures a maintenance association within a maintenance domain and enters Ethernet connectivity fault management (CFM) service configuration mode.
Step 5	**continuity-check** **Example:** `Device(config-ecfm-srv)# continuity-check`	Configures the transmission of continuity check messages (CCMs).
Step 6	**continuity-check** [**interval** *cc-interval*] **Example:** `Device(config-ecfm-srv)# continuity-check interval 10s`	Configures the per-service parameters and sets the interval at which CCMs are transmitted.
Step 7	**exit** **Example:** `Device(config-ecfm-srv)# exit`	Returns to Ethernet connectivity fault management configuration mode.
Step 8	**mep archive-hold-time** *minutes* **Example:** `Device(config-ecfm)# mep archive-hold-time 60`	Sets the amount of time that data from a missing MEP is kept in the continuity check database or that entries are held in the error database before they are purged.
Step 9	**exit** **Example:** `Device(config-ecfm)# exit`	Returns to global configuration mode.
Step 10	**ethernet cfm global** **Example:** `Device(config)# ethernet cfm global`	Enables CFM processing globally on the device.
Step 11	**ethernet cfm traceroute cache** **Example:**	Enables caching of CFM data learned through traceroute messages.

	Command or Action	Purpose
	`Device(config)# ethernet cfm traceroute cache`	
Step 12	**ethernet cfm traceroute cache size** *entries* **Example:** `Device(config)# ethernet cfm traceroute cache size 200`	Sets the maximum size for the CFM traceroute cache table.
Step 13	**ethernet cfm traceroute cache hold-time** *minutes* **Example:** `Device(config)# ethernet cfm traceroute cache hold-time 60`	Sets the amount of time that CFM traceroute cache entries are retained.
Step 14	**interface** *type number* **Example:** `Device(config)# interface gigabitethernet0/0/2`	Specifies an interface and enters interface configuration mode.
Step 15	**service instance** *id* **ethernet** [*evc-name*] **Example:** `Device(config-if)# service instance 333 ethernet evc1`	Configures an Ethernet service instance on an interface and enters Ethernet service configuration mode.
Step 16	**encapsulation** *encapsulation-type* **Example:** `Device(config-if-srv)# encapsulation dot1q 5`	Sets the encapsulation method used by the interface.
Step 17	**bridge-domain** *bridge-id* **Example:** `Device(config-if-srv)# bridge-domain 100`	Binds a service instance to a bridge domain instance.
Step 18	**cfm mep domain** *domain-name* **mpid** *id* **Example:** `Device(config-if-srv)# cfm mep domain L4 mpid 4001`	Configures the MEP domain and the ID.
Step 19	**exit** **Example:** `Device(config-if-srv)# exit`	Returns to interface configuration mode.
Step 20	**exit** **Example:** `Device(config-if)# exit`	Returns to global configuration mode.

	Command or Action	Purpose
Step 21	**interface** *type number* **Example:** `Device(config)# interface gigabitethernet0/0/2`	Specifies an interface and enters interface configuration mode.
Step 22	**service instance** *id* **ethernet** [*evc-name*] **Example:** `Device(config-if)# service instance 333 ethernet evc1`	Configures an Ethernet service instance on an interface and enters Ethernet service configuration mode.
Step 23	**encapsulation** *encapsulation-type* **Example:** `Device(config-if-srv)# encapsulation dot1q 5`	Sets the encapsulation method used by the interface.
Step 24	**bridge-domain** *bridge-id* **Example:** `Device(config-if-srv)# bridge-domain 100`	Binds a service instance to a bridge domain instance.
Step 25	**cfm mip level** *level* **Example:** `Device(config-if-srv)#cfm mip level 4`	Creates a MIP and sets the maintenance level number.
Step 26	**end** **Example:** `Device(config-if-srv)# end`	Returns to privileged EXEC mode.

Provisioning Service on the PE-AGG A

Procedure

	Command or Action	Purpose
Step 1	**enable** **Example:** `Device> enable`	Enables privileged EXEC mode. • Enter your password if prompted.
Step 2	**configure terminal** **Example:** `Device# configure terminal`	Enters global configuration mode.
Step 3	**ethernet cfm domain** *domain-name* **level** *level-id* **Example:**	Defines a CFM maintenance domain at a particular maintenance level and enters Ethernet CFM configuration mode.

	Command or Action	Purpose
	`Device(config)# ethernet cfm domain Customer level 7`	
Step 4	**service** *short-ma-name* **evc** *evc-name* **vlan** *vlanid* **direction down** **Example:** `Device(config-ecfm)# service s41 evc 41 vlan 41 direction down`	Configures a maintenance association within a maintenance domain and enters Ethernet connectivity fault management (CFM) service configuration mode.
Step 5	**continuity-check** **Example:** `Device(config-ecfm-srv)# continuity-check`	Configures the transmission of continuity check messages (CCMs).
Step 6	**continuity-check** [**interval** *cc-interval*] **Example:** `Device(config-ecfm-srv)# continuity-check interval 10s`	Configures the per-service parameters and sets the interval at which CCMs are transmitted.
Step 7	**exit** **Example:** `Device(config-ecfm-srv)# exit`	Returns to Ethernet connectivity fault management configuration mode.
Step 8	**mep archive-hold-time** *minutes* **Example:** `Device(config-ecfm)# mep archive-hold-time 65`	Sets the amount of time that data from a missing MEP is kept in the continuity check database or that entries are held in the error database before they are purged.
Step 9	**exit** **Example:** `Device(config-ecfm)# exit`	Returns to global configuration mode.
Step 10	**ethernet cfm global** **Example:** `Device(config)# ethernet cfm global`	Enables CFM processing globally on the device.
Step 11	**interface** *type number* **Example:** `Device(config)# interface gigabitethernet0/0/2`	Specifies an interface and enters interface configuration mode.
Step 12	**service instance** *id* **ethernet** [*evc-name*] **Example:** `Device(config-if)# service instance 333 ethernet evc1`	Configures an Ethernet service instance on an interface and enters Ethernet service configuration mode.

	Command or Action	Purpose
Step 13	**encapsulation** *encapsulation-type* **Example:** `Device(config-if-srv)# encapsulation dot1q 5`	Sets the encapsulation method used by the interface.
Step 14	**bridge-domain** *bridge-id* **Example:** `Device(config-if-srv)# bridge-domain 100`	Binds a service instance to a bridge domain instance.
Step 15	**cfm mip level** *level* **Example:** `Device(config-if-srv)#cfm mip level 4`	Creates a MIP and sets the maintenance level number.
Step 16	**end** **Example:** `Device(config-if-srv)# end`	Returns to privileged EXEC mode.

Provisioning Service on the N-PE A

Procedure

	Command or Action	Purpose
Step 1	**enable** **Example:** `Device> enable`	Enables privileged EXEC mode. • Enter your password if prompted.
Step 2	**configure terminal** **Example:** `Device# configure terminal`	Enters global configuration mode.
Step 3	**ethernet cfm domain** *domain-name* **level** *level-id* **Example:** `Device(config)# ethernet cfm domain Customer level 7`	Defines a CFM maintenance domain at a particular maintenance level and enters Ethernet CFM configuration mode.
Step 4	**service** *short-ma-name* **evc** *evc-name* **vlan** *vlanid* **direction down** **Example:** `Device(config-ecfm)# service s41 evc 41 vlan 41 direction down`	Configures a maintenance association within a maintenance domain and enters Ethernet connectivity fault management (CFM) service configuration mode.
Step 5	**continuity-check** **Example:**	Configures the transmission of continuity check messages (CCMs).

	Command or Action	Purpose
	`Device(config-ecfm-srv)# continuity-check`	
Step 6	**continuity-check** [**interval** *cc-interval*] **Example:** `Device(config-ecfm-srv)# continuity-check interval 10s`	Configures the per-service parameters and sets the interval at which CCMs are transmitted.
Step 7	**exit** **Example:** `Device(config-ecfm-srv)# exit`	Returns to Ethernet connectivity fault management configuration mode.
Step 8	**mep archive-hold-time** *minutes* **Example:** `Device(config-ecfm)# mep archive-hold-time 60`	Sets the amount of time that data from a missing MEP is kept in the continuity check database or that entries are held in the error database before they are purged.
Step 9	**exit** **Example:** `Device(config-ecfm)# exit`	Returns to global configuration mode.
Step 10	**ethernet cfm global** **Example:** `Device(config)# ethernet cfm global`	Enables CFM processing globally on the device.
Step 11	**ethernet cfm traceroute cache** **Example:** `Device(config)# ethernet cfm traceroute cache`	Enables caching of CFM data learned through traceroute messages.
Step 12	**ethernet cfm traceroute cache size** *entries* **Example:** `Device(config)# ethernet cfm traceroute cache size 200`	Sets the maximum size for the CFM traceroute cache table.
Step 13	**ethernet cfm traceroute cache hold-time** *minutes* **Example:** `Device(config)# ethernet cfm traceroute cache hold-time 60`	Sets the amount of time that CFM traceroute cache entries are retained.
Step 14	**interface** *type number* **Example:** `Device(config)# interface gigabitethernet0/0/2`	Specifies an interface and enters interface configuration mode.

	Command or Action	Purpose
Step 15	**service instance** *id* **ethernet** [*evc-name*] **Example:** `Device(config-if)# service instance 333 ethernet evc1`	Configures an Ethernet service instance on an interface and enters Ethernet service configuration mode.
Step 16	**encapsulation** *encapsulation-type* **Example:** `Device(config-if-srv)# encapsulation dot1q 5`	Sets the encapsulation method used by the interface.
Step 17	**bridge-domain** *bridge-id* **Example:** `Device(config-if-srv)# bridge-domain 100`	Binds a service instance to a bridge domain instance.
Step 18	**cfm mip level** *level* **Example:** `Device(config-if-srv)#cfm mip level 4`	Creates a MIP and sets the maintenance level number.
Step 19	**exit** **Example:** `Device(config-if-srv)# exit`	Returns to interface configuration mode.
Step 20	**exit** **Example:** `Device(config-if)# exit`	Returns to global configuration mode.
Step 21	**interface** *type number* **Example:** `Device(config-if)# interface gigabitethernet0/0/2`	Specifies an interface.
Step 22	**service instance** *id* **ethernet** [*evc-name*] **Example:** `Device(config-if)# service instance 333 ethernet evc1`	Configures an Ethernet service instance on an interface and enters Ethernet service configuration mode.
Step 23	**encapsulation** *encapsulation-type* **Example:** `Device(config-if-srv)# encapsulation dot1q 5`	Sets the encapsulation method used by the interface.
Step 24	**bridge-domain** *bridge-id* **Example:** `Device(config-if-srv)# bridge-domain 100`	Binds a service instance to a bridge domain instance.

	Command or Action	Purpose
Step 25	**cfm mep domain** *domain-name* **mpid** *id* **Example:** `Device(config-if-srv)# cfm mep domain L4 mpid 4001`	Configures the MEP domain and the ID.
Step 26	**end** **Example:** `Device(config-if-srv)# end`	Returns to privileged EXEC mode.

Provisioning Service on the CE-B

Procedure

	Command or Action	Purpose
Step 1	**enable** **Example:** `Device> enable`	Enables privileged EXEC mode. • Enter your password if prompted.
Step 2	**configure terminal** **Example:** `Device# configure terminal`	Enters global configuration mode.
Step 3	**ethernet cfm domain** *domain-name* **level** *level-id* **Example:** `Device(config)# ethernet cfm domain Customer level 7`	Defines a CFM maintenance domain at a particular maintenance level and enters Ethernet CFM configuration mode.
Step 4	**service** *short-ma-name* **evc** *evc-name* **vlan** *vlanid* **direction down** **Example:** `Device(config-ecfm)# service s41 evc 41 vlan 41 direction down`	Configures a maintenance association within a maintenance domain and enters Ethernet connectivity fault management (CFM) service configuration mode.
Step 5	**continuity-check** **Example:** `Device(config-ecfm-srv)# continuity-check`	Configures the transmission of continuity check messages (CCMs).
Step 6	**continuity-check** [**interval** *cc-interval*] **Example:** `Device(config-ecfm-srv)# continuity-check interval 10s`	Configures the per-service parameters and sets the interval at which CCMs are transmitted.

	Command or Action	Purpose
Step 7	**exit** **Example:** `Device(config-ecfm-srv)# exit`	Returns to Ethernet connectivity fault management configuration mode.
Step 8	**mep archive-hold-time** *minutes* **Example:** `Device(config-ecfm)# mep archive-hold-time 60`	Sets the amount of time that data from a missing MEP is kept in the continuity check database or that entries are held in the error database before they are purged.
Step 9	**exit** **Example:** `Device(config-ecfm)# exit`	Returns to global configuration mode.
Step 10	**ethernet cfm global** **Example:** `Device(config)# ethernet cfm global`	Enables CFM processing globally on the device.
Step 11	**ethernet cfm traceroute cache** **Example:** `Device(config)# ethernet cfm traceroute cache`	Enables caching of CFM data learned through traceroute messages.
Step 12	**ethernet cfm traceroute cache size** *entries* **Example:** `Device(config)# ethernet cfm traceroute cache size 200`	Sets the maximum size for the CFM traceroute cache table.
Step 13	**ethernet cfm traceroute cache hold-time** *minutes* **Example:** `Device(config)# ethernet cfm traceroute cache hold-time 60`	Sets the amount of time that CFM traceroute cache entries are retained.
Step 14	**interface** *type number* **Example:** `Device(config)# interface gigabitethernet0/0/1`	Specifies an interface and enters interface configuration mode.
Step 15	**service instance** *id* **ethernet** [*evc-name*] **Example:** `Device(config-if)# service instance 333 ethernet evc1`	Configures an Ethernet service instance on an interface and enters Ethernet service configuration mode.
Step 16	**encapsulation** *encapsulation-type* **Example:**	Sets the encapsulation method used by the interface.

	Command or Action	Purpose
	`Device(config-if-srv)# encapsulation dot1q 5`	
Step 17	**bridge-domain** *bridge-id* **Example:** `Device(config-if-srv)# bridge-domain 100`	Binds a service instance to a bridge domain instance.
Step 18	**cfm mep domain** *domain-name* **mpid** *id* **Example:** `Device(config-if-srv)# cfm mep domain L4 mpid 4001`	Configures the MEP domain and the ID.
Step 19	**end** **Example:** `Device(config-if-srv)# end`	Returns to privileged EXEC mode.

Provisioning Service on the U-PE B

Procedure

	Command or Action	Purpose
Step 1	**enable** **Example:** `Device> enable`	Enables privileged EXEC mode. • Enter your password if prompted.
Step 2	**configure terminal** **Example:** `Device# configure terminal`	Enters global configuration mode.
Step 3	**ethernet cfm domain** *domain-name* **level** *level-id* **Example:** `Device(config)# ethernet cfm domain Customer level 7`	Defines a CFM maintenance domain at a particular maintenance level and enters Ethernet CFM configuration mode.
Step 4	**service** *short-ma-name* **evc** *evc-name* **vlan** *vlanid* **direction down** **Example:** `Device(config-ecfm)# service s41 evc 41 vlan 41 direction down`	Configures a maintenance association within a maintenance domain and enters Ethernet connectivity fault management (CFM) service configuration mode.
Step 5	**continuity-check** **Example:** `Device(config-ecfm-srv)# continuity-check`	Configures the transmission of continuity check messages (CCMs).

	Command or Action	Purpose
Step 6	**continuity-check** [**interval** *cc-interval*] **Example:** `Device(config-ecfm-srv)# continuity-check interval 10s`	Configures the per-service parameters and sets the interval at which CCMs are transmitted.
Step 7	**exit** **Example:** `Device(config-ecfm-srv)# exit`	Returns to Ethernet connectivity fault management configuration mode.
Step 8	**mep archive-hold-time** *minutes* **Example:** `Device(config-ecfm)# mep archive-hold-time 60`	Sets the amount of time that data from a missing MEP is kept in the continuity check database or that entries are held in the error database before they are purged.
Step 9	**exit** **Example:** `Device(config-ecfm)# exit`	Returns to global configuration mode.
Step 10	**ethernet cfm global** **Example:** `Device(config)# ethernet cfm global`	Enables CFM processing globally on the device.
Step 11	**ethernet cfm traceroute cache** **Example:** `Device(config)# ethernet cfm traceroute cache`	Enables caching of CFM data learned through traceroute messages.
Step 12	**ethernet cfm traceroute cache size** *entries* **Example:** `Device(config)# ethernet cfm traceroute cache size 200`	Sets the maximum size for the CFM traceroute cache table.
Step 13	**ethernet cfm traceroute cache hold-time** *minutes* **Example:** `Device(config)# ethernet cfm traceroute cache hold-time 60`	Sets the amount of time that CFM traceroute cache entries are retained.
Step 14	**interface** *type number* **Example:** `Device(config)# interface gigabitethernet0/0/2`	Specifies an interface and enters interface configuration mode.

	Command or Action	Purpose
Step 15	**service instance** *id* **ethernet** [*evc-name*] **Example:** `Device(config-if)# service instance 333 ethernet evc1`	Configures an Ethernet service instance on an interface and enters Ethernet service configuration mode.
Step 16	**encapsulation** *encapsulation-type* **Example:** `Device(config-if-srv)# encapsulation dot1q 5`	Sets the encapsulation method used by the interface.
Step 17	**bridge-domain** *bridge-id* **Example:** `Device(config-if-srv)# bridge-domain 100`	Binds a service instance to a bridge domain instance.
Step 18	**cfm mip level** *level* **Example:** `Device(config-if-srv)#cfm mip level 4`	Creates a MIP and sets the maintenance level number.
Step 19	**exit** **Example:** `Device(config-if-srv)# exit`	Returns to interface configuration mode.
Step 20	**exit** **Example:** `Device(config-if)# exit`	Returns to global configuration mode.
Step 21	**interface** *type number* **Example:** `Device(config)# interface gigabitethernet0/0/2`	Specifies an interface and enters interface configuration mode.
Step 22	**service instance** *id* **ethernet** [*evc-name*] **Example:** `Device(config-if)# service instance 333 ethernet evc1`	Configures an Ethernet service instance on an interface and enters Ethernet service configuration mode.
Step 23	**encapsulation** *encapsulation-type* **Example:** `Device(config-if-srv)# encapsulation dot1q 5`	Sets the encapsulation method used by the interface.
Step 24	**bridge-domain** *bridge-id* **Example:** `Device(config-if-srv)# bridge-domain 100`	Binds a service instance to a bridge domain instance.

	Command or Action	Purpose
Step 25	**cfm mep domain** *domain-name* **mpid** *id* **Example:** `Device(config-if-srv)# cfm mep domain L4 mpid 4001`	Configures the MEP domain and the ID.
Step 26	**end** **Example:** `Device(config-if-srv)# end`	Returns to privileged EXEC mode.

Provisioning Service on the PE-AGG B

Procedure

	Command or Action	Purpose
Step 1	**enable** **Example:** `Device> enable`	Enables privileged EXEC mode. • Enter your password if prompted.
Step 2	**configure terminal** **Example:** `Device# configure terminal`	Enters global configuration mode.
Step 3	**ethernet cfm domain** *domain-name* **level** *level-id* **Example:** `Device(config)# ethernet cfm domain Customer level 7`	Defines a CFM maintenance domain at a particular maintenance level and enters Ethernet CFM configuration mode.
Step 4	**service** *short-ma-name* **evc** *evc-name* **vlan** *vlanid* **direction down** **Example:** `Device(config-ecfm)# service s41 evc 41 vlan 41 direction down`	Configures a maintenance association within a maintenance domain and enters Ethernet connectivity fault management (CFM) service configuration mode.
Step 5	**continuity-check** **Example:** `Device(config-ecfm-srv)# continuity-check`	Configures the transmission of continuity check messages (CCMs).
Step 6	**continuity-check** [**interval** *cc-interval*] **Example:** `Device(config-ecfm-srv)# continuity-check interval 10s`	Configures the per-service parameters and sets the interval at which CCMs are transmitted.

	Command or Action	Purpose
Step 7	**exit** **Example:** `Device(config-ecfm-srv)# exit`	Returns to Ethernet connectivity fault management configuration mode.
Step 8	**mep archive-hold-time** *minutes* **Example:** `Device(config-ecfm)# mep archive-hold-time 65`	Sets the amount of time that data from a missing MEP is kept in the continuity check database or that entries are held in the error database before they are purged.
Step 9	**exit** **Example:** `Device(config-ecfm)# exit`	Returns to global configuration mode.
Step 10	**ethernet cfm global** **Example:** `Device(config)# ethernet cfm global`	Enables CFM processing globally on the device.
Step 11	**interface** *type number* **Example:** `Device(config)# interface gigabitethernet0/0/2`	Specifies an interface and enters interface configuration mode.
Step 12	**service instance** *id* **ethernet** [*evc-name*] **Example:** `Device(config-if)# service instance 333 ethernet evc1`	Configures an Ethernet service instance on an interface and enters Ethernet service configuration mode.
Step 13	**encapsulation** *encapsulation-type* **Example:** `Device(config-if-srv)# encapsulation dot1q 5`	Sets the encapsulation method used by the interface.
Step 14	**bridge-domain** *bridge-id* **Example:** `Device(config-if-srv)# bridge-domain 100`	Binds a service instance to a bridge domain instance.
Step 15	**cfm mip level** *level* **Example:** `Device(config-if-srv)#cfm mip level 4`	Creates a MIP and sets the maintenance level number.
Step 16	**end** **Example:** `Device(config-if-srv)# end`	Returns to privileged EXEC mode.

Provisioning Service on the N-PE B

Procedure

	Command or Action	Purpose
Step 1	**enable** **Example:** `Device> enable`	Enables privileged EXEC mode. • Enter your password if prompted.
Step 2	**configure terminal** **Example:** `Device# configure terminal`	Enters global configuration mode.
Step 3	**ethernet cfm domain** *domain-name* **level** *level-id* **Example:** `Device(config)# ethernet cfm domain Customer level 7`	Defines a CFM maintenance domain at a particular maintenance level and enters Ethernet CFM configuration mode.
Step 4	**service** *short-ma-name* **evc** *evc-name* **vlan** *vlanid* **direction down** **Example:** `Device(config-ecfm)# service s41 evc 41 vlan 41 direction down`	Configures a maintenance association within a maintenance domain and enters Ethernet connectivity fault management (CFM) service configuration mode.
Step 5	**continuity-check** **Example:** `Device(config-ecfm-srv)# continuity-check`	Configures the transmission of continuity check messages (CCMs).
Step 6	**continuity-check** [**interval** *cc-interval*] **Example:** `Device(config-ecfm-srv)# continuity-check interval 10s`	Configures the per-service parameters and sets the interval at which CCMs are transmitted.
Step 7	**exit** **Example:** `Device(config-ecfm-srv)# exit`	Returns to Ethernet connectivity fault management configuration mode.
Step 8	**mep archive-hold-time** *minutes* **Example:** `Device(config-ecfm)# mep archive-hold-time 60`	Sets the amount of time that data from a missing MEP is kept in the continuity check database or that entries are held in the error database before they are purged.
Step 9	**exit** **Example:** `Device(config-ecfm)# exit`	Returns to global configuration mode.

	Command or Action	Purpose
Step 10	**ethernet cfm global** **Example:** `Device(config)# ethernet cfm global`	Enables CFM processing globally on the device.
Step 11	**ethernet cfm traceroute cache** **Example:** `Device(config)# ethernet cfm traceroute cache`	Enables caching of CFM data learned through traceroute messages.
Step 12	**ethernet cfm traceroute cache size** *entries* **Example:** `Device(config)# ethernet cfm traceroute cache size 200`	Sets the maximum size for the CFM traceroute cache table.
Step 13	**ethernet cfm traceroute cache hold-time** *minutes* **Example:** `Device(config)# ethernet cfm traceroute cache hold-time 60`	Sets the amount of time that CFM traceroute cache entries are retained.
Step 14	**interface** *type number* **Example:** `Device(config)# interface gigabitethernet0/0/2`	Specifies an interface and enters interface configuration mode.
Step 15	**service instance** *id* **ethernet** [*evc-name*] **Example:** `Device(config-if)# service instance 333 ethernet evc1`	Configures an Ethernet service instance on an interface and enters Ethernet service configuration mode.
Step 16	**encapsulation** *encapsulation-type* **Example:** `Device(config-if-srv)# encapsulation dot1q 5`	Sets the encapsulation method used by the interface.
Step 17	**bridge-domain** *bridge-id* **Example:** `Device(config-if-srv)# bridge-domain 100`	Binds a service instance to a bridge domain instance.
Step 18	**cfm mip level** *level* **Example:** `Device(config-if-srv)#cfm mip level 4`	Creates a MIP and sets the maintenance level number.
Step 19	**exit** **Example:**	Returns to interface configuration mode.

	Command or Action	Purpose
	`Device(config-if-srv)# exit`	
Step 20	**exit** **Example:** `Device(config-if)# exit`	Returns to global configuration mode.
Step 21	**interface** *type number* **Example:**	Specifies an interface.
Step 22	**service instance** *id* **ethernet** [*evc-name*] **Example:** `Device(config-if)# service instance 333 ethernet evc1`	Configures an Ethernet service instance on an interface and enters Ethernet service configuration mode.
Step 23	**encapsulation** *encapsulation-type* **Example:** `Device(config-if-srv)# encapsulation dot1q 5`	Sets the encapsulation method used by the interface.
Step 24	**bridge-domain** *bridge-id* **Example:** `Device(config-if-srv)# bridge-domain 100`	Binds a service instance to a bridge domain instance.
Step 25	**cfm mep domain** *domain-name* **mpid** *id* **Example:** `Device(config-if-srv)# cfm mep domain L4 mpid 4001`	Configures the MEP domain and the ID.
Step 26	**end** **Example:** `Device(config-if-srv)# end`	Returns to privileged EXEC mode.

Configuring and Enabling the Cross-Check Function

Configuring and Enabling Cross-Checking for an Inward Facing MEP on the U PE-A

Perform this task to configure and enable cross-checking for an inward facing MEP. This task requires you to configure and enable cross-checking on two devices. This task is optional.

Procedure

	Command or Action	Purpose
Step 1	**enable** **Example:** `Device> enable`	Enables privileged EXEC mode. • Enter your password if prompted.

	Command or Action	Purpose
Step 2	**configure terminal** **Example:** `Device# configure terminal`	Enters global configuration mode.
Step 3	**ethernet cfm domain** *domain-name* **level** *level-id* **Example:** `Device(config)# ethernet cfm domain ServiceProvider level 4`	Defines a CFM domain at a specified level and enters Ethernet CFM configuration mode.
Step 4	**mep crosscheck mpid** *id* **vlan** *vlan-id* [**mac** *mac-address*] **Example:** `Device(config-ether-cfm)# mep crosscheck mpid 402 vlan 100`	Statically defines a remote MEP on a specified VLAN within the domain.
Step 5	**exit** **Example:** `Device(config-ether-cfm)# exit#`	Returns to global configuration mode.
Step 6	**ethernet cfm mep crosscheck start-delay** *delay* **Example:** `Device(config)# ethernet cfm mep crosscheck start-delay 60`	Configures the maximum amount of time that the device waits for remote MEPs to come up before the cross-check operation is started
Step 7	**exit** **Example:** `Device(config)# exit`	Returns to privileged EXEC mode.
Step 8	**ethernet cfm mep crosscheck** {**enable** | **disable**} **level** {*level-id* | *level-id-level-id* [,*level-id-level-id*]} **vlan** {*vlan-id* | **any** | *vlan-id-vlan-id* [,*vlan-id-vlan-id*]} **Example:** `Device# ethernet cfm mep crosscheck enable level 4 vlan 100`	Enables cross-checking between remote MEPs in the domain and MEPs learned through CCMs.

Example

The following example configures cross-checking on an inward facing MEP (U-PE A):

```
U-PE A
ethernet cfm domain ServiceProvider level 4
mep crosscheck mpid 402 vlan 100
!
ethernet cfm mep crosscheck start-delay 60
```

The following example enables cross-checking on an inward facing MEP (U-PE A):

```
U-PE A
U-PEA# ethernet cfm mep crosscheck enable level 4 vlan 100
```

Configuring and Enabling Cross-Checking for an Inward Facing MEP on the U PE-B

Perform this task to configure and enable cross-checking for an inward facing MEP. This task requires you to configure and enable cross-checking on two devices. This task is optional.

Procedure

	Command or Action	Purpose
Step 1	**enable** **Example:** `Device> enable`	Enables privileged EXEC mode. • Enter your password if prompted.
Step 2	**configure terminal** **Example:** `Device# configure terminal`	Enters global configuration mode.
Step 3	**ethernet cfm domain** *domain-name* **level** *level-id* **Example:** `Device(config)# ethernet cfm domain ServiceProvider level 4`	Defines a CFM domain at a specified level and enters Ethernet CFM configuration mode.
Step 4	**mep crosscheck mpid** *id* **vlan** *vlan-id* [**mac** *mac-address*] **Example:** `Device(config-ether-cfm)# mep crosscheck mpid 401 vlan 100`	Statically defines a remote MEP on a specified VLAN within the domain.
Step 5	**exit** **Example:** `Device(config-ether-cfm)# exit`	Returns to global configuration mode.
Step 6	**ethernet cfm mep crosscheck start-delay** *delay* **Example:** `Device(config)# ethernet cfm mep crosscheck start-delay 60`	Configures the maximum amount of time that the device waits for remote MEPs to come up before the cross-check operation is started.
Step 7	**exit** **Example:** `Device(config)# exit`	Returns to privileged EXEC mode.
Step 8	**ethernet cfm mep crosscheck** {**enable** | **disable**} **level** {*level-id* | *level-id-level-id*	Enables cross-checking between MEPs.

	Command or Action	Purpose
	[,*level-id-level-id*]} **vlan** {*vlan-id* | **any** | *vlan-id-vlan-id* [,*vlan-id-vlan-id*]} **Example:** `Device# ethernet cfm mep crosscheck enable level 4 vlan 100`	

Example

The following example configures cross-checking on an inward facing MEP (U-PE B)

```
U-PE B
ethernet cfm domain ServiceProvider level 4
mep crosscheck mpid 401 vlan 100
!
ethernet cfm mep crosscheck start-delay 60
```

The following example enables cross-checking on an inward facing MEP (U-PE B)

```
U-PE B
U-PEB# ethernet cfm mep crosscheck enable level 4 vlan 100
```

Configuring and Enabling Cross-Checking for an Outward Facing MEP on the CE-A

Procedure

	Command or Action	Purpose
Step 1	**enable** **Example:** `Device> enable`	Enables privileged EXEC mode. • Enter your password if prompted.
Step 2	**configure terminal** **Example:** `Device# configure terminal`	Enters global configuration mode.
Step 3	**ethernet cfm domain** *domain-name* **level** *level-id* [**direction outward**] **Example:** `Device(config)# ethernet cfm domain Customer level 7 direction outward`	Defines a CFM domain at a specified level and enters Ethernet CFM configuration mode.
Step 4	**mep crosscheck mpid** *id* **vlan** *vlan-id* [**mac** *mac-address*] **Example:** `Device(config-ether-cfm)# mep crosscheck mpid 702 vlan 100`	Statically defines a remote MEP with a specified ID, VLAN, and domain.
Step 5	**exit** **Example:**	Returns to global configuration mode.

	Command or Action	Purpose
	`Device(config-ether-cfm)# exit`	
Step 6	**ethernet cfm mep crosscheck start-delay** *delay* **Example:** `Device(config)# ethernet cfm mep crosscheck start-delay 60`	Configures the maximum amount of time that the device waits for remote MEPs to come up before the cross-check operation is started.
Step 7	**exit** **Example:** `Device(config)# exit`	Returns to privileged EXEC mode.
Step 8	**ethernet cfm mep crosscheck** {**enable** | **disable**} **level** {*level-id* | *level-id-level-id* [,*level-id-level-id*]} **vlan** {*vlan-id* | **any** | *vlan-id-vlan-id* [,*vlan-id-vlan-id*]} **Example:** `Device# ethernet cfm mep crosscheck enable level 7 vlan 100`	Enables cross-checking between MEPs.

Configuring and Enabling Cross-Checking for an Outward Facing MEP on the CE-B

Procedure

	Command or Action	Purpose
Step 1	**enable** **Example:** `Device> enable`	Enables privileged EXEC mode. • Enter your password if prompted.
Step 2	**configure terminal** **Example:** `Device# configure terminal`	Enters global configuration mode.
Step 3	**ethernet cfm domain** *domain-name* **level** *level-id* [**direction outward**] **Example:** `Device(config)# ethernet cfm domain Customer level 7 direction outward`	Defines an outward CFM domain at a specified level and enters Ethernet CFM configuration mode.
Step 4	**mep crosscheck mpid** *id* **vlan** *vlan-id* [**mac** *mac-address*] **Example:** `Device(config-ether-cfm)# mep crosscheck mpid 401 vlan 100`	Statically defines a remote MEP on a VLAN within a specified domain.

	Command or Action	Purpose
Step 5	**exit** **Example:** `Device(config-ether-cfm)# exit`	Returns to global configuration mode.
Step 6	**ethernet cfm mep crosscheck start-delay** *delay* **Example:** `Device(config)# ethernet cfm mep crosscheck start-delay 60`	Configures the maximum amount of time that the device waits for remote MEPs to come up before the cross-check operation is started.
Step 7	**exit** **Example:** `Device(config)# exit`	Returns to privileged EXEC mode.
Step 8	**ethernet cfm mep crosscheck** {**enable** | **disable**} **level** {*level-id* | *level-id-level-id* [,*level-id-level-id*]} **vlan** {*vlan-id* | **any** | *vlan-id-vlan-id* [,*vlan-id-vlan-id*]} **Example:** `Device# ethernet cfm mep crosscheck enable level 7 vlan 100`	Enables cross-checking between MEPs.

Configuring CFM over Bridge Domains

Perform this task to configure Ethernet CFM over bridge domains. This task is optional.

Procedure

	Command or Action	Purpose
Step 1	**enable** **Example:** `Device> enable`	Enables privileged EXEC mode. • Enter your password if prompted.
Step 2	**configure terminal** **Example:** `Device# configure terminal`	Enters global configuration mode.
Step 3	**ethernet cfm domain** *domain-name* **level** *level-id* **direction outward** **Example:** `Device(config)# ethernet cfm domain CUSTOMER level 7 direction outward`	Defines a CFM maintenance domain at a particular level and enters Ethernet CFM configuration mode.

	Command or Action	Purpose
Step 4	**service** *csi-id* **evc** *evc-name* **Example:** `Device(config-ether-cfm)# service customer_100 evc evc_100`	Sets a universally unique ID for a CSI within a maintenance domain.
Step 5	**exit** **Example:** `Device(config-ether-cfm)# exit`	Returns to global configuration mode.
Step 6	**ethernet cfm domain** *domain-name* **level** *level-id* **Example:** `Device(config)# ethernet cfm domain MIP level 7`	Defines a CFM maintenance domain at a particular level and enters Ethernet CFM configuration mode.
Step 7	**exit** **Example:** `Device(config-ether-cfm)# exit`	Returns to global configuration mode.
Step 8	**ethernet cfm domain** *domain-name* **level** *level-id* **Example:** `Device(config)# ethernet cfm domain PROVIDER level 4`	Defines a CFM maintenance domain at a particular level and enters Ethernet CFM configuration mode.
Step 9	**service** *csi-id* **evc** *evc-name* **Example:** `Device(config-ether-cfm)# service provider_1 evc evc_100`	Sets a universally unique ID for a CSI within a maintenance domain.
Step 10	**mep crosscheck mpid** *id* **evc** *evc-name* **mac** *mac-address* **Example:** `Device(config-ether-cfm)# mep crosscheck mpid 200 evc evc_100 mac 1010.1010.1010`	Statically defines a remote MEP within a maintenance domain.
Step 11	**exit** **Example:** `Device(config-ether-cfm)# exit`	Returns to global configuration mode.

	Command or Action	Purpose
Step 12	**ethernet evc** *evc-name* **Example:** `Device(config)# ethernet evc evc_100`	Defines an EVC and enters EVC configuration mode.
Step 13	**exit** **Example:** `Device(config-evc)# exit`	Returns to global configuration mode.
Step 14	**interface** *type number* **Example:** `Device(config)# interface gigabitethernet0/0/1`	Specifies an interface and enters interface configuration mode.
Step 15	**no ip address** **Example:** `Device(config-if)# no ip address`	Disables IP processing.
Step 16	**service instance** *id* **ethernet** *evc-id* **Example:** `Device(config-if)# service instance 100 ethernet evc_100`	Specifies an Ethernet service instance on an interface and enters service instance configuration mode.
Step 17	**encapsulation dot1q** *vlan-id* **Example:** `Device(config-if-srv)# encapsulation dot1q 100`	Defines the matching criteria to map 802.1Q frames on an ingress interface to the appropriate service instance.
Step 18	**bridge-domain** *bridge-id* **Example:** `Device(config-if-srv)# bridge-domain 100`	Establishes a bridge domain.
Step 19	**cfm mep domain** *domain-name* **mpid** *mpid-value* **Example:** `Device(config-if-srv)# cfm mep domain CUSTOMER mpid 1001`	Configures a MEP for a domain.
Step 20	**end** **Example:**	Returns to privileged EXEC mode.

	Command or Action	Purpose
	`Device(config-if-srv)# end`	
Step 21	**configure terminal** **Example:** `Device# configure terminal`	Enters global configuration mode.
Step 22	**interface** *type name* **Example:** `Device(config)# interface gigabitethernet0/0/1`	Specifies an interface and enters interface configuration mode.
Step 23	**no ip address** **Example:** `Device(config-if)# no ip address`	Disables IP processing.
Step 24	**ethernet cfm mip level** *level-id* **Example:** `Device(config-if)# ethernet cfm mip level 7`	Provisions a MIP at a specified maintenance level on an interface.
Step 25	**service instance** *id* **ethernet** *evc-id* **Example:** `Device(config-if)# service instance 100 ethernet evc_100`	Configures an Ethernet service instance on an interface and enters service instance configuration mode.
Step 26	**encapsulation dot1q** *vlan-id* **Example:** `Device(config-if-srv)# encapsulation dot1q 100`	Defines the matching criteria to map 802.1Q frames on an ingress interface to the appropriate service instance.
Step 27	**bridge-domain** *bridge-id* **Example:** `Device(config-if-srv)# bridge-domain 100`	Establishes a bridge domain.
Step 28	**cfm mep domain** *domain-name* **mpid** *mpid-value* **Example:** `Device(config-if-srv)# cfm mep domain PROVIDER inward mpid 201`	Configures a MEP for a domain.

	Command or Action	Purpose
Step 29	**end** **Example:** `Device(config-if-srv)# end`	Returns to privileged EXEC mode.
Step 30	**configure terminal** **Example:** `Device# configure terminal`	Enters global configuration mode.
Step 31	**ethernet cfm cc enable level** *level-id* **evc** *evc-name* **Example:** `Device(config)# ethernet cfm cc enable level 0-7 evc evc_100`	Globally enables transmission of CCMs.
Step 32	**ethernet cfm cc level any evc** *evc-name* **interval** *seconds* **loss-threshold** *num-msgs* **Example:** `Device(config)# ethernet cfm cc level any evc evc_100 interval 100 loss-threshold 2`	Sets the parameters for CCMs.
Step 33	**end** **Example:** `Device(config)# end`	Returns to privileged EXEC mode.

What to do next

Note When configuring CFM over bridge domains where the bridge-domain ID matches the vlan ID service, you must configure the vlan service and the EVC service with the same service name. The bridge-domain is associated with the EVC service. The vlan and the bridge-domain represent the same broadcast domain.

Troubleshooting Tips

To verify and isolate a fault, start at the highest level maintenance domain and do the following:

- Check the device error status.
- When an error exists, perform a loopback test to confirm the error.
- Run a traceroute to the destination to isolate the fault.

- If the fault is identified, correct the fault.
- If the fault is not identified, go to the next lower maintenance domain and repeat these four steps at that maintenance domain level.
- Repeat the first four steps, as needed, to identify and correct the fault.

Configuration Examples for Configuring Ethernet CFM in a Service Provider Network

Example: Provisioning a Network

This configuration example shows only CFM-related commands. All commands that are required to set up the data path and configure the VLANs on the device are not shown. However, it should be noted that CFM traffic will not flow into or out of the device if the VLANs are not properly configured.

```
CE-A
!
ethernet cfm domain Customer level 7
!!
ethernet cfm global
ethernet cfm traceroute cache
ethernet cfm traceroute cache size 200
ethernet cfm traceroute cache hold-time 60
!!
ethernet cfm cc level any vlan any interval 20 loss-threshold 3
!
snmp-server enable traps ethernet cfm cc mep-up mep-down cross-connect loop config
snmp-server enable traps ethernet cfm crosscheck mep-missing mep-unknown service-up

U-PE A
!
ethernet cfm domain Customer level 7
!
ethernet cfm domain ServiceProvider level 4
mep archive-hold-time 60
!
ethernet cfm domain OperatorA level 1
mep archive-hold-time 65
!
ethernet cfm global
ethernet cfm traceroute cache
ethernet cfm traceroute cache size 200
ethernet cfm traceroute cache hold-time 60
!
interface gigabitethernet0/0/2
ethernet cfm mip level 1
!
ethernet cfm cc level any vlan any interval 20 loss-threshold 3
!
snmp-server enable traps ethernet cfm cc mep-up mep-down cross-connect loop config
snmp-server enable traps ethernet cfm crosscheck mep-missing mep-unknown service-up
PE-AGG A
ethernet cfm domain OperatorA level 1
mep archive-hold-time 65
```

```
!
ethernet cfm global
!
interface gigabitethernet0/0/2
ethernet cfm mip level 1
!
interface gigabitethernet0/0/2
ethernet cfm mip level 1
N-PE A
!
ethernet cfm domain ServiceProvider level 4
mep archive-hold-time 60
!
ethernet cfm domain OperatorA level 1
mep archive-hold-time 65
!
ethernet cfm global
ethernet cfm traceroute cache
ethernet cfm traceroute cache size 200
ethernet cfm traceroute cache hold-time 60
!
interface gigabitethernet0/0/2
ethernet cfm mip level 1
!
ethernet cfm cc level any vlan any interval 20 loss-threshold 3
!
snmp-server enable traps ethernet cfm cc mep-up mep-down cross-connect loop config
snmp-server enable traps ethernet cfm crosscheck mep-missing mep-unknown service-up
U-PE B
!
ethernet cfm domain Customer level 7
!
ethernet cfm domain ServiceProvider level 4
mep archive-hold-time 60
!
ethernet cfm domain OperatorB level 2
mep archive-hold-time 65
!
ethernet cfm global
ethernet cfm traceroute cache
ethernet cfm traceroute cache size 200
ethernet cfm traceroute cache hold-time 60
!
interface gigabitethernet0/0/2
ethernet cfm mip level 2
!
ethernet cfm cc level any vlan any interval 20 loss-threshold 3
!
snmp-server enable traps ethernet cfm cc mep-up mep-down cross-connect loop config
snmp-server enable traps ethernet cfm crosscheck mep-missing mep-unknown service-up
PE-AGG B
ethernet cfm domain OperatorB level 2
mep archive-hold-time 65
!
ethernet cfm global
!
interface gigabitethernet0/0/2
ethernet cfm mip level 2
!
interface gigabitethernet0/0/2
ethernet cfm mip level 2
N-PE B
!
ethernet cfm cc level any vlan any interval 20 loss-threshold 3
```

```
!
ethernet cfm domain ServiceProvider level 4
mep archive-hold-time 60
!
ethernet cfm domain OperatorB level 2
mep archive-hold-time 65
!
ethernet cfm global
ethernet cfm traceroute cache
ethernet cfm traceroute cache size 200
ethernet cfm traceroute cache hold-time 60
!
interface gigabitethernet0/0/2
ethernet cfm mip level 2
!
snmp-server enable traps ethernet cfm cc mep-up mep-down cross-connect loop config
snmp-server enable traps ethernet cfm crosscheck mep-missing mep-unknown service-up
CE-B
!
ethernet cfm domain Customer level 7
!!
ethernet cfm global
ethernet cfm traceroute cache
ethernet cfm traceroute cache size 200
ethernet cfm traceroute cache hold-time 60
!!
ethernet cfm cc level any vlan any interval 20 loss-threshold 3
!
snmp-server enable traps ethernet cfm cc mep-up mep-down cross-connect loop config
snmp-server enable traps ethernet cfm crosscheck mep-missing mep-unknown service-up
```

Example: Provisioning Service

This configuration example shows only CFM-related commands. All commands that are required to set up the data path and configure the VLANs on the device are not shown. However, it should be noted that CFM traffic will not flow into or out of the device if the VLANs are not properly configured.

```
CE-A
!
ethernet cfm domain Customer level 7
service Customer1 evc evc1 vlan 100

!
ethernet cfm global
ethernet cfm traceroute cache
ethernet cfm traceroute cache size 200
ethernet cfm traceroute cache hold-time 60
!
interface gigabitethernet0/0/2 / use an appropriate device-specific interface
ethernet cfm mep level 7 direction outward domain Customer1 mpid 701 vlan 100
!
ethernet cfm cc enable level 7 vlan 100
ethernet cfm cc level any vlan any interval 20 loss-threshold 3
U-PE A
!
ethernet cfm domain Customer level 7
!
ethernet cfm domain ServiceProvider level 4
mep archive-hold-time 60
service MetroCustomer10pA evc evc1 vlan 100
!
```

```
ethernet cfm domain OperatorA level 1
mep archive-hold-time 65
 service MetroCustomer10pA evc evc1 vlan 100
!
ethernet cfm global
ethernet cfm traceroute cache
ethernet cfm traceroute cache size 200
ethernet cfm traceroute cache hold-time 60
!
interface gigabitethernet0/0/2  /use an appropriate device-specific interface
ethernet cfm mip level 7
ethernet cfm mep level 4 mpid 401 vlan 100
ethernet cfm mep level 1 mpid 101 vlan 100
!
interface gigabitethernet0/0/2 /use an appropriate device-specific interface
ethernet cfm mip level 1
!
ethernet cfm cc enable level 4 vlan 100
ethernet cfm cc enable level 1 vlan 100
ethernet cfm cc level any vlan any interval 20 loss-threshold 3
PE-AGG A
ethernet cfm domain OperatorA level 1
mep archive-hold-time 65
service MetroCustomer10pA evc evc1 vlan 100
!
ethernet cfm global
!
interface gigabitethernet0/0/2 use an appropriate device-specific interface
ethernet cfm mip level 1
!
interface gigabitethernet0/0/2 use an appropriate device-specific interface
ethernet cfm mip level 1
N-PE A
!
ethernet cfm domain ServiceProvider level 4
mep archive-hold-time 60
service MetroCustomer1 evc evc1 vlan 100
!
ethernet cfm domain OperatorA level 1
mep archive-hold-time 65
service MetroCustomer10pA evc evc1 vlan 100
!
ethernet cfm global
ethernet cfm traceroute cache
ethernet cfm traceroute cache size 200
ethernet cfm traceroute cache hold-time 60
!
interface gigabitethernet0/0/2 use an appropriate device-specific interface
ethernet cfm mip level 1
!
interface gigabitethernet0/0/2 use an appropriate device-specific interface
ethernet cfm mip level 4
ethernet cfm mep level 1 mpid 102 vlan 100
!
ethernet cfm cc enable level 1 vlan 100
ethernet cfm cc level any vlan any interval 20 loss-threshold 3
U-PE B
!
ethernet cfm domain Customer level 7
!
ethernet cfm domain ServiceProvider level 4
mep archive-hold-time 60
service MetroCustomer1 evc evc1 vlan 100
!
```

```
ethernet cfm domain OperatorB level 2
mep archive-hold-time 65
service MetroCustomer10pB evc evc1 vlan 100
!
ethernet cfm global
ethernet cfm traceroute cache
ethernet cfm traceroute cache size 200
ethernet cfm traceroute cache hold-time 60
!
interface gigabitethernet0/0/2 use an appropriate device-specific interface
ethernet cfm mip level 7
ethernet cfm mep level 4 mpid 402 vlan 100
ethernet cfm mep level 2 mpid 201 vlan 100
!
interface gigabitethernet0/0/2 use an appropriate device-specific interface
ethernet cfm mip level 2
!
ethernet cfm cc enable level 4 vlan 100
ethernet cfm cc enable level 2 vlan 100
ethernet cfm cc level any vlan any interval 20 loss-threshold 3
PE-AGG B
ethernet cfm domain OperatorB level 2
mep archive-hold-time 65
service MetroCustomer10pB evc evc1 vlan 100
!
ethernet cfm global
!
interface gigabitethernet0/0/2 use an appropriate device-specific interface
ethernet cfm mip level 2
!
interface gigabitethernet0/0/2 use an appropriate device-specific interface
ethernet cfm mip level 2
N-PE B
!
ethernet cfm domain ServiceProvider level 4
mep archive-hold-time 60
service MetroCustomer1 evc evc1 vlan 100
!
ethernet cfm domain OperatorB level 2
mep archive-hold-time 65
service MetroCustomer10pB evc evc1 vlan 100
!
ethernet cfm global
ethernet cfm traceroute cache
ethernet cfm traceroute cache size 200
ethernet cfm traceroute cache hold-time 60
!
interface gigabitethernet0/0/2 use an appropriate device-specific interface
ethernet cfm mip level 2
!
interface gigabitethernet0/0/2 use an appropriate device-specific interface
ethernet cfm mip level 4
ethernet cfm mep level 2 mpid 202 vlan 100
!
ethernet cfm cc enable level 2 vlan 100
ethernet cfm cc level any vlan any interval 20 loss-threshold 3
CE-B
!
ethernet cfm domain Customer level 7
service Customer1 vlan 100
!
ethernet cfm global
ethernet cfm traceroute cache
ethernet cfm traceroute cache size 200
```

```
ethernet cfm traceroute cache hold-time 60
!
interface gigabitethernet0/0/2 use an appropriate device-specific interface
ethernet cfm mep level 7 direction outward domain Customer1 mpid 702 vlan 100
!
ethernet cfm cc enable level 7 vlan 100
ethernet cfm cc level any vlan any interval 20 loss-threshold 3
```

Troubleshooting CFM Features

Provides troubleshooting solutions for the CFM features.

Table 5: Troubleshooting Scenarios for CFM Features

Problem	Solution
When you configure CFM, the message “Match registers are not available” is displayed.	For more information on match registers, see Ethernet Co Fault Management at http://www.cisco.com/en/US/docs/ios/12_2sr/12_2sra/feature/guide/sr CFM uses two match registers to identify the control pa and each VLAN spanning tree also uses a match register its control packet type. For both protocols to work on th system, each line card should support three match regis at least one supporting only a 44 bit MAC match.
CFM configuration errors	CFM configuration error occurs when when a MEP rec continuity check with an overlapping MPID. To verify of the error, use the command **show ethernet cfm erro configuration** or **show ethernet cfm errors**.
CFM ping and traceroute result is "not found"	Complete these steps: **1.** Use **show run | i ethernet cfm** to view all CFM gl configurations. **2.** Use **show ethernet cfm statistics** to view local M their CCM statistics **3.** Use **trace ethernet cfm** command to start a CFM t
CFM connectivity is down and issues at the maintenance domain levels	Use the **ping ethernet {mac-address | mpid** *id* **| multi domain** *domain-name* { **vlan v***lan-id* **| port | evc** *evc-n* **the traceroute ethernet {mac-address | mpid** *id* **} dor** *domain-name* { **vlan** *vlan-id* **| port | evc evc-name}** co to verify ethernet CFM connectivity. Share the output v for further investigation. **Note** CFM multicast ping with packet size great 1460 is not supported.

Problem	Solution

Loop trap error	Use the **show ethernet cfm error** command to che
	Trap errors as shown here:
	
	`CE(config-if)#do sh ethernet cfm err`
	`Level Vlan MPID Remote MAC  Reason`
	`Service ID`
	`5  711  550  1001.1001.1001 Loop Trap Er`
	`PE#sh ethernet cfm err`
	`Level Vlan MPID Remote MAC  Reason`
	`Service ID`
	`5  711  550  1001.1001.1001 Loop Trap Er`

Module has insufficient match registers	Complete these steps: **1.** Verify and confirm if a unsupported line card is the router. **2.** If yes, perform an OIR of the unsupported line
CFM is deactivated	Complete these steps: **1.** Check if all the line cards have free match reag **2.** Check if CFM is activated on supervisor cards. supported on supervisor cards that has two matc this scenario, CFM is automatically disabled on and enabled on the remaining line cards.
ethernet cfm logging	In a scale scenario, you configure either the consol rate-limiting using **logging rate-limit** or using **logg** instead of using **logging console**. The suggested rate- 30 messages per second.

Glossary

CCM—continuity check message. A multicast CFM frame that a MEP transmits periodically to ensure continuity across the maintenance entities to which the transmitting MEP belongs, at the MA level on which the CCM is sent. No reply is sent in response to receiving a CCM.

EVC—Ethernet virtual connection. An association of two or more user-network interfaces.

fault alarm—An out-of-band signal, typically an SNMP notification, that notifies a system administrator of a connectivity failure.

inward-facing MEP—A MEP that resides in a bridge and transmits to and receives CFM messages from the direction of the bridge relay entity.

maintenance domain—The network or part of the network belonging to a single administration for which faults in connectivity are to be managed. The boundary of a maintenance domain is defined by a set of DSAPs, each of which may become a point of connectivity to a service instance.

maintenance domain name—The unique identifier of a domain that CFM is to protect against accidental concatenation of service instances.

MEP—maintenance endpoint. An actively managed CFM entity associated with a specific DSAP of a service instance, which can generate and receive CFM frames and track any responses. It is an endpoint of a single MA, and terminates a separate maintenance entity for each of the other MEPs in the same MA.

MEP CCDB—A database, maintained by every MEP, that maintains received information about other MEPs in the maintenance domain.

MIP—maintenance intermediate point. A CFM entity, associated with a specific pair of ISS SAPs or EISS Service Access Points, which reacts and responds to CFM frames. It is associated with a single maintenance association and is an intermediate point within one or more maintenance entities.

MIP CCDB—A database of information about the MEPs in the maintenance domain. The MIP CCDB can be maintained by a MIP.

MP—maintenance point. Either a MEP or a MIP.

MPID—maintenance endpoint identifier. A small integer, unique over a given MA, that identifies a specific MEP.

OAM—operations, administration, and maintenance. A term used by several standards bodies to describe protocols and procedures for operating, administrating, and maintaining networks. Examples are ATM OAM and IEEE Std. 802.3ah OAM.

operator—Entity that provides a service provider a single network of provider bridges or a single Layer 2 or Layer 3 backbone network. An operator may be identical to or a part of the same organization as the service provider. For purposes of IEEE P802.1ag, Draft Standard for Local and Metropolitan Area Networks, the operator and service provider are presumed to be separate organizations.

Terms such as “customer,” “service provider,” and “operator” reflect common business relationships among organizations and individuals that use equipment implemented in accordance with IEEE P802.1ag.

UNI—user-network interface. A common term for the connection point between an operator's bridge and customer equipment. A UNI often includes a C-VLAN-aware bridge component. The term UNI is used broadly in the IEEE P802.1ag standard when the purpose for various features of CFM are explained. UNI has no normative meaning.

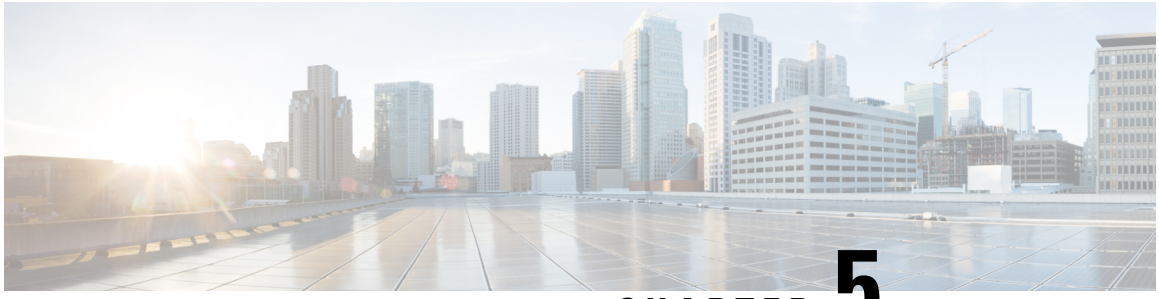

CHAPTER 5

G.8032 and CFM Support for Microwave Adaptive Bandwidth

The G.8032 and CFM Support for Microwave Adaptive Bandwidth feature enables the G.8032 Ethernet Protection Ring (ERP) mechanism to be used as a trigger in response to bandwidth degradation occurrences (such as a signal degradation [SD] indicator) on microwave links. Ethernet Connectivity Fault Management (CFM) interacts with the microwave transceiver to continuously check the quality and the bandwidth of the microwave link. When microwave link degradation (based on the configured service level agreement [SLA] in use) is detected, CFM notifies the Embedded Event Manager (EEM), which in turn notifies a mechanism such as, G.8032 ERP. G.8032 ERP ensures that the degraded microwave link is bypassed and no longer used. The degraded microwave link can still be used by one or more of the G.8032 ERP instances. Only the affected G.8032 ERP instances are switched to alternate link.

Prerequisites for G.8032 and CFM Microwave Adaptive Bandwidth Support

- The microwave transceiver in the network topology must support adaptive bandwidth modulation, and the microwave transceiver must support the Ethernet Connectivity Fault Management (CFM) extension for microwave devices as defined by Cisco.
- All devices connected directly to the microwave transceiver must support signal degradation (SD) functions. Devices not connected directly to the microwave transceiver can be standard-compliant nodes or enhanced SD-capable nodes.
- In any homogeneous ring topology, all links must be microwave links and all devices must support microwave SD-based ring protection.
- A ring topology with multiple microwave links can experience a signal degradation condition on one or more of the microwave links. Only one signal degradation condition per ring instance is supported. This support is provided on a first-come, first-serve basis, per ring instance.

About G.8032 and CFM Support for Microwave Adaptive Bandwidth

Microwave Adaptive Bandwidth Feature Functionality

The G.8032 and CFM Support for Microwave Adaptive Bandwidth feature extends the functionality of the G.8032 Ethernet Protection Ring (ERP) mechanism and Ethernet Connectivity Fault Management (CFM).

This feature enables the G.8032 ERP mechanism to be used as a trigger in response to bandwidth degradation occurrences (such as a signal degradation [SD] indicator) on microwave links. Ethernet CFM interacts with the microwave transceiver to continuously check the quality and the bandwidth of the microwave link. When microwave link degradation (based on the configured service level agreement [SLA] in use) is detected, CFM notifies the Embedded Event Manager (EEM), which in turn notifies a mechanism such as, G.8032 ERP. G.8032 ERP ensures that the degraded microwave link is bypassed and no longer used. Depending upon the severity of the signal degradation and the configured threshold, G.8032 protection switching occurs on a per-instance basis.

For more information about Ethernet CFM, see the “Configuring IEEE Standard-Compliant Ethernet CFM in a Service Provider Network” module or the “Configuring Ethernet Connectivity Fault Management in a Service Provider Network” module.

For more information about G.8032 ERP, see the “ITU-T G.8032 Ethernet Ring Protection Switching” module.

Fixed Versus Adaptive Bandwidth Modulation and the Microwave Adaptive Bandwidth Feature

Traditional microwave radios use fixed modulation schemes whereby any degradation in the wave propagation conditions (for example, due to adverse weather conditions such as heavy fog or rain) led to complete loss of the signal and a disruption of traffic. In a fixed modulation scheme, the microwave radio link had a binary state of either “'available” (on) or “unavailable” (off).

More technologically advanced microwave radios use an adaptive modulation scheme. In an adaptive modulation scheme, when the microwave link degrades due to adverse weather conditions, the radio changes its modulation scheme to a more robust scheme. The radio continues to broadcast but with less capacity. As a result, the radio can be in several capacity or bandwidth states, and not just on or off.

In the case of microwave links with adaptive modulation, the control Operation, Administration, and Maintenance (OAM) protocols are unable to make best use of the available bandwidth due of the following OAM characteristics:

- If the protocol used for failure detection is tagged as high-priority traffic, the OAM frames bypass the degraded (congested) microwave links and no protection switching is triggered.

- If the protocol used for failure detection is tagged as low-priority traffic, then momentary congestion over the native Ethernet (that is, the nonmicrowave) links could lead to loss of continuity and spurious protection switching.

Even though the network topology must be provisioned with enough redundant bandwidth to handle a complete failure, in certain situations where the service committed information rate (CIR) is very low, forwarding as

much excess traffic (above the CIR) as possible is important. Therefore, for those situations, treating bandwidth degradation as a complete failure is not desirable.

Adaptive Bandwidth Multi-hop Extensions

In a network topology consider a single interface on the head-end router is connected to a topology consisting of multiple microwave links either in series or in a hub-and-spoke arrangement. In such scenarios, the links degrade independently, and send their own VSMs containing current and nominal bandwidth for their links. Identifying the VSMs with the source MAC address does not help identify the degraded link.

To help identify the degraded links in a multi-hop topology, Link IDs can be configured on the VSM. The Link ID is configured in the EEM configuration using the **event ethernet microwave sd interface** command. The command support registrations on one or more individual links identified by either link ID or source MAC address.

With multi-hop topology, all individual links identified by the interface. If the interface is degraded, the links too get degraded.

The multi-hop topology is supported when multiple microwave links are grouped together into a port-channel.

Figure 2: Adaptive Bandwidth with Multi-hop Extensions

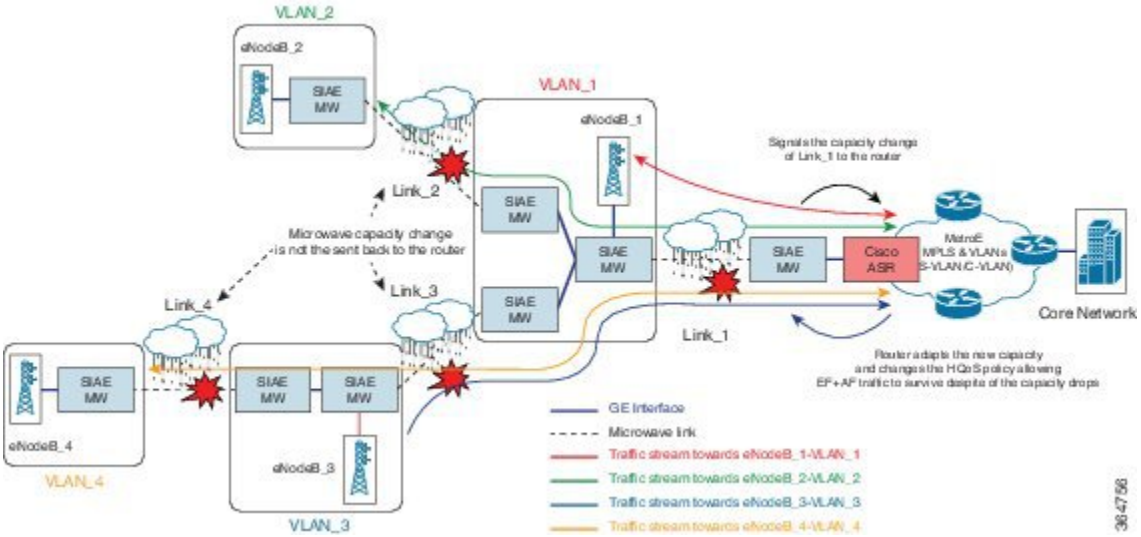

Prerequisites for Assigning Link IDs

- If VSMs for multiple links are sent from the same source MAC address, then link IDs must be used.
- Link IDs must be unique within the network segment connected to a single physical link on the head-end router.

Restrictions for Assigning Link IDs

- If link IDs are used, the EEM scripts are registered on either a set of source MAC addresses or a set of link IDs but not a mixture of both.
- When registering an EEM script and specifying multiple links it is recommended that the threshold is equal to or lower than the minimum nominal bandwidth across all those links.

How to Configure G.8032 and CFM Support for Microwave Adaptive Bandwidth

Creating the Ethernet Microwave Event and Using G.8032 to Specify Appropriate Actions

For more information on how to configure the ethernet ring profile, see LAN Switching Configuration Guide IOS XE Release 3S (Cisco ASR 900 Series).

Procedure

Step 1 **enable**

Example:

```
Device> enable
```

Enables privileged EXEC mode.

- Enter your password if prompted.

Step 2 **configure terminal**

Example:

```
Device# configure terminal
```

Enters global configuration mode.

Step 3 **event manager applet** *applet-name*

Example:

```
Device(config)# event manager applet mw_ring_sd1
```

Registers an applet with the Embedded Event Manager (EEM) and enters applet configuration mode.

Step 4 **event ethernet microwave sd** {**interface** *type number* [**mac-address** *mac_address* | **link-id** *link-id*]**threshold** *threshold-bandwidth*}

Example:

```
Device(config-applet)# event ethernet microwave sd interface gigabitethernet0/0/0 link-id
23 threshold 400
```

Creates the Ethernet microwave signal degradation (SD) event.

- **mac-address** *mac_address* | **link-id** *link-id* Optional—Specifies one or more links for monitoring. Either the MAC address or the link ID can be specified.
- After the event is created, use the **action switch ring g8032 instance** command at step 5 to specify the appropriate action to take on this event.

Step 5 **action** *action-id* **switch ring g8032** *ring-name* **instance** *instance-id*

Example:

```
Device(config-applet)# action 1 switch ring g8032 ringA instance 1
```

Specifies the protocol switch action for an instance on a link of a G.8032 Ethernet Protection Ring (ERP).

Step 6 **event ethernet microwave clear-sd** {**interface** *type number*}

Example:

```
Device(config-applet)# event ethernet microwave clear-sd interface gigabitethernet0/0/0
```

Creates the Ethernet microwave event to be associated with bandwidth SD occurrences.

- After the event is created, use the **action switch ring g8032 clear instance** command at step 7 to clear the SD occurrence and bring the ring back to the normal (idle) state.

Step 7 **action** *action-id* **switch ring g8032 clear** *ring-name* **instance** {*instance-id* | **all**}

Example:

```
Device(config-applet)# action 1 switch ring g8032 clear ringA instance 1
```

Specifies the action of clearing an SD occurrence on a link of a G.8032 Ethernet Protection Ring (ERP) topology.

Step 8 Repeat steps 4 through 7 for each Ethernet microwave event you want to create. Then proceed to step 9.

Example:

–

Step 9 **exit**

Example:

```
Device(config-applet)# exit
```

Exits applet configuration mode.

Modifying Ethernet Microwave Event Settings

Procedure

Step 1 **enable**

Example:

```
Device> enable
```

Enables privileged EXEC mode.

- Enter your password if prompted.

Step 2 **configure terminal**

Example:

```
Device# configure terminal
```

Enters global configuration mode.

Step 3 **interface** *type name*

Example:

```
Device(config)# interface gigabitethernet0/0/0
```

Specifies an interface and enters interface configuration mode.

Step 4 **ethernet event microwave hold-off** *seconds*

Example:

```
Device(config-if)# ethernet event microwave hold-off 30
```

Specifies the microwave bandwidth degradation hold-off time, in seconds.

- This time is used to prevent changes in the state of the network node as a result of signal degradation (SD) occurrences.

Step 5 **ethernet event microwave loss-threshold** *number-of-messages*

Example:

```
Device(config-if)# ethernet event microwave loss-threshold 3
```

Specifies the number of bandwidth Vendor-Specific Messages (VSM) sent from the microwave transceiver to the Cisco device.

Once the link experiences signal degradation, the microwave transceiver sends periodic bandwidth VSM messages to the Cisco device until the bandwidth is fully restored. The interval of these messages is controlled by the microwave transceiver.

This configuration specifies the continuous bandwidth VSM messages the Cisco device misses before declaring a signal recovery event.

Note The signal degradation event is generated if any of these becomes degraded:

- Different link IDs
- Source MACs

Step 6 **ethernet event microwave wtr** *seconds*

Example:

```
Device(config-if)# ethernet event microwave wtr 45
```

Specifies the wait-to-restore (WTR) time, in seconds.

- This time is used to prevent changes in the state of the network node as a result of recovery events after an SD occurrence.

Note Timer parameters are applicable to Port-channel.

Step 7 **exit**

Example:

```
Device(config-if)# exit
```

Exits interface configuration mode.

Step 8 **show ethernet event microwave status** [**interface** *type number*]

Example:

```
Device# show ethernet event microwave status GigabitEthernet 0/0/2
```

(Optional) Displays the microwave event status.

Step 9 **show ethernet event microwave statistics** [**interface** *type number*]

Example:

```
Device# show ethernet event microwave statistics GigabitEthernet 0/0/2
```

(Optional) Displays the microwave event statistics.

Step 10 **end**

Example:

```
Device# end
```

Returns to user EXEC mode.

Configuration Examples for G.8032 and CFM Support for Microwave Adaptive Bandwidth

Example: Configuring the Ethernet Microwave Event

In this example, two Ethernet microwave events have been created, mw_ring_sdl1 and mw_ring_sd_2:

```
Device> enable
Device> configure terminal
Device(config)# event manager applet mw_ring_sd1
Device(config-applet)# event ethernet microwave sd interface gigabitethernet0/0/0 threshold
 400
Device(config-applet)# action 1 switch ring g8032 ringA instance 1
Device(config-applet)# exit
Device(config)# event manager applet mw_ring_sd2
Device(config-applet)# event ethernet microwave sd interface gigabitethernet0/0/0 threshold
 400
```

```
Device(config-applet)# action 1 switch ring g8032 ringA instance 2
Device(config-applet)# exit
```

In this example, a microwave event has been configured that clears all the signal degradation (SD) events, as defined by the **action switch ring g8032 clear instance all** command:

```
Device> enable
Device> configure terminal
Device(config)# event manager applet mw_ring_clear_sd
Device(config-applet)# event ethernet microwave clear-sd interface gigabitethernet0/0/0
Device(config-applet)# action 1 switch ring g8032 clear ringA instance all
Device(config-applet)# exit
```

Example: Verifying the Ethernet Microwave Event Configuration

The following is sample output from the **show ethernet event microwave status** command where GigabitEthernet interface 0/0/2 has been specified. Use the command to confirm that the configuration is performing as intended.

```
Device# show ethernet event microwave status GigabitEthernet 0/0/2

Microwave Bandwidth Status for GigabitEthernet0/0/2
State: SIGNAL_DEGRADED
Hold Time: 0 seconds
Restore Time: 10 seconds
Loss Threshold: 3
Total VSM Receive Count: 1
Total VSM Drop Count: 0

Sender Address 64f6.9d67.a006
State: SIGNAL_DEGRADED
Elapsed time in this state: 00:00:43
Nominal Bandwidth: 600 Mbps
Current Bandwidth: 500 Mbps
Lowest Bandwidth: 500 Mbps
Last VSM Received: Thu Apr 30 11:03:45.493
VSM Receive Count: 1
VSM Drop Count: 0
VSM Period: 10 seconds
Hold Timer: Not running
Wait-to-Restore Timer: 1 seconds remaining
Periodic Timer: Not running
Transitions into degraded state: 1
```

The following is sample output from the **show ethernet event microwave status** command where Port-channel20 has been specified. Use the command to confirm that the configuration is performing as intended.

```
Device# show ethernet event microwave status interface Port-channel20/2

Microwave Bandwidth Status for Port-channel20
State: SIGNAL_DEGRADED
Hold Time: 0 seconds
Restore Time: 10 seconds
Loss Threshold: 3
Total VSM Receive Count: 2
Total VSM Drop Count: 0
```

```
Sender Address 64f6.9d67.a053
State: SIGNAL_DEGRADED
Elapsed time in this state: 00:00:26
Nominal Bandwidth: 700 Mbps
Current Bandwidth: 100 Mbps
Lowest Bandwidth: 100 Mbps
Last VSM Received: Fri Apr 24 13:09:13.245
VSM Receive Count: 2
VSM Drop Count: 0
VSM Period: 10 seconds
Hold Timer: Not running
Wait-to-Restore Timer: Not running
Periodic Timer: 29 seconds remaining
Transitions into degraded state: 1
```

The following is sample output from the **show ethernet event microwave status** command displaying the for Link ID TLVs:

```
Device# show ethernet event microwave status GigabitEthernet 0/0/2
Microwave Bandwidth Status for Ethernet0/0
  State:                   SIGNAL_DEGRADED
  Hold Time:               0 seconds
  Restore Time:            10 seconds
  Loss threshold:          3
  Total VSM Receive Count: 6
  Total VSM Drop Count:    0

  Link ID 4 (Sender Address aaa.bbbb.cccc)
    State:                           SIGNAL_OK
    Elapsed time in this state:      01:12:10
    Nominal Bandwidth:               10000 Mbps
    Current Bandwidth:               10000 Mbps
    Lowest Bandwidth:                N/A, not in degraded state
    Last VSM Received:               Fri Jan 24 10:24:43.349
    VSM Receive Count:               3
    VSM Drop Count:                  0
    Hold Timer:                      Not running
    Wait-to-Restore Timer:           Not running
    Periodic Timer:                  Not running
    Transitions into degraded state: 2
```

The following is sample output from the **show ethernet event microwave statistics** command where GigabitEthernet interface 0/0/2 has been specified:

```
Device#show ethernet event microwave statistics GigabitEthernet 0/0/2

Microwave Bandwidth Status for GigabitEthernet0/0/2
State: SIGNAL_OK
Hold Time: 0 seconds
Restore Time: 10 seconds
Loss Threshold: 3
Total VSM Receive Count: 0
Total VSM Drop Count: 0

Sender Address 64f6.9d67.a00a
State: SIGNAL_OK
Elapsed time in this state: 00:02:58
Nominal Bandwidth: 900 Mbps
Current Bandwidth: 900 Mbps
Lowest Bandwidth: N/A, not in degraded state
Last VSM Received: Fri Apr 24 13:57:42.600
VSM Receive Count: 0
VSM Drop Count: 0
```

```
VSM Period: 60 seconds
Hold Timer: Not running
Wait-to-Restore Timer: Not running
Periodic Timer: Not running
Transitions into degraded state: 0
```

Example: Signal Degraded Event Syslog Messages

This example shows the sample output of signal degraded event syslog messages

```
Apr 30 16:33:45.497 IST: %ETHERNET_EVENT-4-MW_BW_CHANGE:
Available microwave bandwidth for link with source MAC 64F6.9D67.A006, link ID 0 on
GigabitEthernet0/0/7 has changed due to VSM,
current is 500Mbps, nominal is 600Mbps.
Apr 30 16:33:45.502 IST: %HA_EM-6-LOG: DEGRADED: eem started
```

Example: Configuring the TRUNK EFP with ACM Microwave

The following example shows the configuration of MEP on a trunk EFP.

```
interface GigabitEthernet0/3/3
no ip address
negotiation auto
ethernet cfm mep domain md1 mpid 1 service ma1
service instance trunk 1 ethernet
encapsulation dot1q 1-109
rewrite ingress tag pop 1 symmetric
l2protocol peer lacp
bridge-domain from-encapsulation
!
End
```

The MEP is configured outside EFP. The corresponding domain/service configuration would look like:

```
ethernet cfm ieee
ethernet cfm global
ethernet cfm domain md1 level 1
service ma1 evc evc1 vlan 100 direction down
continuity-check
```

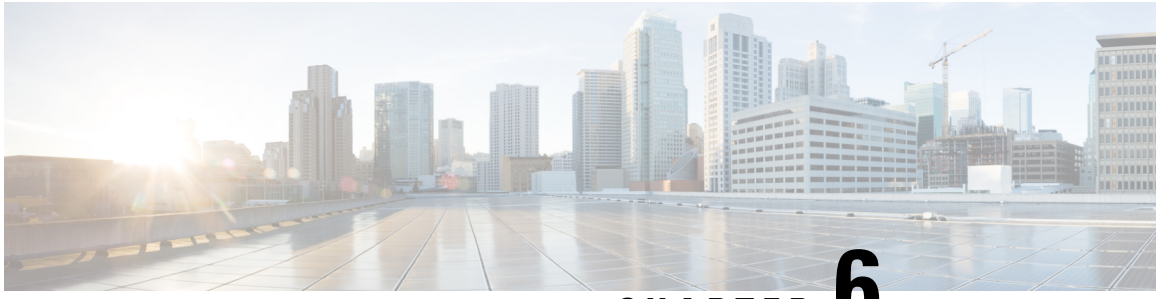

CHAPTER 6

Transparent CFM

CFM support on a customer VLAN (C-VLAN) allows a customer to provision maintenance intermediate points (MIPs) and Up maintenance endpoints (MEPs) on a C-VLAN component for EFP (Q-in-Q interfaces with dot1q or dot1ad C-UNI). MIPs and Up MEPs provide a customer with visibility to network traffic on the C-VLAN. CFM support on a C-VLAN also provides a common point for service verification and standardizes the user-network interface (UNI).

Transparent CFM is a mechanism to provide transparency on CFM frames between customer ends. Transparency helps the service provider network to pass the entire maintenance levels (0-7) of CFM frames from one customer end to another customer end by UP MEP that is configured on UNI-N port at any level.

Information About Transparent CFM

This section provides the information about transparent CFM.

EFP (Q-in-Q interfaces with dot1q or dot1ad C-UNI)

A EFP (Q-in-Q interfaces with dot1q or dot1ad C-UNI) represents a demarcation point between a C-VLAN space and an S-VLAN space. For purposes of CFM protocol processing, a dot1q-tunnel port is modeled as having two components: a C-VLAN component and an S- VLAN component. The C-VLAN component processes double-tagged packets from the relay-function and single-tagged packets from the wire. The S-VLAN component processes single-tagged packets from the relay-function and generates single tagged packets on relay.

CFM traffic belonging to each of the C-VLAN and S-VLAN components can be distinguished based on Ethernet layer encapsulation. This distinction allows each of the components to use the entire maintenance level range (0 to 7) without violating the maintenance domain hierarchy.

The CFM traffic generated by the C-VLAN component is transparent to the S-VLAN component if the maintenance levels of the C- VLAN component are lower than those of the S-VLAN component. The Ethernet encapsulation should be used in combination with the CFM maintenance level to determine which maintenance domain a particular traffic flow belongs to.

Benefits of Transparent CFM

The current implementation of IEEE 802.1ag CFM for EVC infrastructure provides for the provisioning of maintenance points only on S-VLANs; customers cannot monitor or troubleshoot their networks if they are provisioned on provider edge (PE) devices as aggregation nodes supporting QnQ or 802.1ad services.

The Transparent CFM support enhances the current IEEE CFM implementation by allowing customers to monitor the network at any level (0-7); CFM frames with single tag from the customer end and double tagged frames from network end are forwarded transparently.

S-VLAN Component with Transparent CFM Support

With the Transparent CFM support implemented, the S-VLAN component supports the following functions and attributes:

- Up MEPs at any level (0 to 7).
- All MEP uses the S-VLAN for processing.
- CFM frames transmitted and received by Up MEPs have a single VLAN tag (the Ethertype may be dot1q or dot1ad), and the VID is equal to the port's access VLAN (S-VLAN).

The reason for this configuration is that the dot1q-tunnel interface marks the endpoint of the S-VLAN domain; hence, its associated S-VLAN component should mark the endpoint of the CFM domain running over the S-VLAN space.

C-VLAN Component with Transparent CFM Support on C-VLANs

With the Transparent CFM support on C-VLANs feature implemented, the C-VLAN component supports the following functions and attributes:

- MIPs at any maintenance level (0 to 7).
- Transparent point functions.
- Up MEPs at any maintenance level (0 to 7).
- Up MEPs use a stack of two tags: an outer tag with a VID equal to the port's access VLAN (S-VLAN) and an inner tag with a selected C-VLAN that is allowed through the dot1q-tunnel port.

Prerequisites for Transparent CFM

- The CFM 802.1ag module must be present in the software image.

Restrictions for Transparent CFM

- Untagged encapsulation is not supported for transparent CFM.
- Transparent CFM is not supported on Smart SFP.
- Lower or similar level LTM/LTR cannot be forwarded on Transparent CFM service.
- Down MEP or Port MEP cannot be configured across EVC where Transparent CFM is configured.

- MIP on C-VLAN component is not supported.
- Transparent CFM is not supported on xConnect and VPLS.
- Transparent CFM should be configured only on Up MEPs.
- Transparent CFM is not supported on hardware offload (CCM interval < 1 second).
- The following table shows the supported rewrite combinations.

Table 6: Rewrite Combinations

Ingress Frame	Ingress Port	Egress Port
Single Tag	No Rewrite	POP1
	Translate 1-to-1	
Double Tag	No Rewrite	
	Translate 1-to-1	

Configuring Transparent CFM

Procedure

Step 1 **enable**

Enables privileged EXEC mode.

- Enter your password if prompted.

Step 2 **configure terminal**

Enters global configuration mode.

Step 3 **ethernet cfm global**

Enables CFM processing globally on the device.

Step 4 **ethernet cfm ieee**

Enables the CFM IEEE version of CFM.

- This command is automatically issued when the **ethernet cfm global** command is issued.

Step 5 **ethernet cfm domain** *domain-name* **level** *level-id*

Defines a CFM maintenance domain at a particular maintenance level and enters Ethernet CFM configuration mode.

Step 6 **service** *MA-name* **evc** *evc-name* **vlan** *vlan-id*

Configures an Ethernet service instance on an interface and enters EVC configuration mode.

Step 7 **continuity-check**

Enable sending and receiving of continuity check messages.

Step 8 **continuity-check** [*interval cc-interval*]

Specifies the number of continuity-check messages that are lost before CFM declares that a MEP is down (unreachable). Range is 2 to 255. Used in conjunction with **interval**.

Configuring Transparent CFM on EFP

Procedure

Step 1 **enable**

Enables privileged EXEC mode.

- Enter your password if prompted.

Step 2 **configure terminal**

Enters global configuration mode.

Step 3 **interface gigabitethernet** *slot* / *subslot* / *port*

Specifies the Gigabit Ethernet or Ten Gigabit Ethernet interface to configure and enters interface configuration mode, where:

- *slot* / *subslot* / *port*: The location of the interface.

Step 4 **no ip address**

Removes an IP address or disable IP processing.

Step 5 **negotiation auto**

Enables autonegotiation on a Gigabit Ethernet interface. Advertisement of flow control occurs.

Step 6 **service instance** *id* **ethernet** *evc-name*

Configures an Ethernet service instance on an interface and enters EVC configuration mode.

Step 7 **encapsulation dot1q** *vlan-id*

Configures the encapsulation. Defines the matching criteria that maps the ingress dot1q or untagged frames on an interface for the appropriate service instance.

- Use the **second-dot1q** keyword and the *vlan-id* argument to specify the VLAN tags to be terminated on the subinterface

Step 8 **transparent-cfm**

Configures transparent CFM.

Step 9 **bridge-domain** *domain-number*

Binds a service instance to a bridge domain instance.

Step 10 **ethernet cfm mep domain** *domain-name* **mpid** *mpid*

Configures a CFM MEP domain.

Configuration Examples for Transparent CFM

This section shows the configuration examples for Transparent CFM.

Example: Configuration of Transparent CFM on EFP

The following example shows the sample configuration of Transparent CFM on EFP.

```
interface GigabitEthernet0/0/1
no ip address
negotiation auto
service instance 1 ethernet EVC
encapsulation dot1q 10
transparent-cfm
bridge-domain 4000
cfm mep domain MD5 mpid 100
```

Example: Configuration of Transparent CFM

The following example shows the sample output of configuration of Transparent CFM.

```
ethernet cfm ieee
ethernet cfm global
ethernet cfm alarm notification all

ethernet cfm domain MD2 level 5
service PMA2 evc evc1 vlan 4000
continuity-check
continuity-check interval 1s
!
ethernet cfm logging
ethernet evc evc1

interface TenGigabitEthernet0/0/3
no ip address
negotiation auto
service instance 1 ethernet evc1
encapsulation dot1q 10
transparent-cfm
bridge-domain 4000
cfm mep domain MD2 mpid 100
!
!
interface TenGigabitEthernet0/0/5
no ip address
negotiation auto
service instance 1 ethernet evc1
encapsulation dot1q 20
rewrite ingress tag pop 1 symmetric
bridge-domain 4000
!
!
```

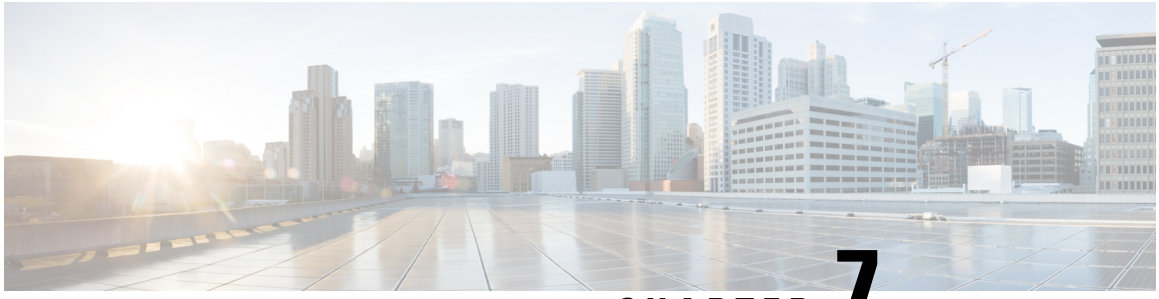

CHAPTER 7

Using Ethernet Fault Detection

Different interfaces on the routers nowadays support layer 1 failure detection where the signal loss between two peers is detected and the information is communicated to the control plane to allow a corrective action. POS interfaces detect complex failures in the routers at layer 2 level and use higher level protocols such as Point-to-Point Protocol (PPP) to negotiate the state between peers before the interface is brought up at an layer 2 level in the control plane.

With the proliferation of the pure layer 2 network, ethernet must also detect failures and perform corrective actions. Hence, the Ethernet Fault Detection (EFD) mechanism is used that allows Ethernet OAM protocols, such as CFM, to control the "line protocol" state of an interface so that if a CFM defect is detected, the corrective actions can be performed.

Previously, EFD was used as an event notifier for CFM only. Protocols like G8032 and REP could register to CFM events and could update the protocol (could bring it down or up) accordingly. But now, EFD allows CFM events and the OAM protocols to be used as an layer 2 BFD or line-protocol for Ethernet interfaces.

Information about Ethernet Fault Detection

Ethernet Fault Detection (EFD) is a mechanism that allows Ethernet OAM protocols, such as CFM, to control the “line protocol” state of an interface.Unlike many other interface types, Ethernet interfaces do not have a line protocol, whose state is independent from that of the interface. For Ethernet interfaces, this role is handled by the physical-layer Ethernet protocol itself, and therefore if the interface is physically up, then it is available and traffic can flow.

EFD changes this to allow CFM to act as the line protocol for Ethernet interfaces. This allows CFM to control the interface state so that if a CFM defect (such as AIS or loss of continuity) is detected with an expected peer MEP, the interface can be shut down. This not only stops any traffic flowing, but also triggers actions in any higher-level protocols to route around the problem. For example, in the case of Layer 2 interfaces, the MAC table would be cleared and MSTP would reconverge. For Layer 3 interfaces, the ARP cache would be cleared and potentially the IGP would reconverge.

Note EFD can only be used for down MEPs. When EFD is used to shut down the interface, the CFM frames continue to flow. This allows CFM to detect when the problem has been resolved, and thus bring the interface backup automatically.

Figure 3: CFM Error Detection and EFD Trigger

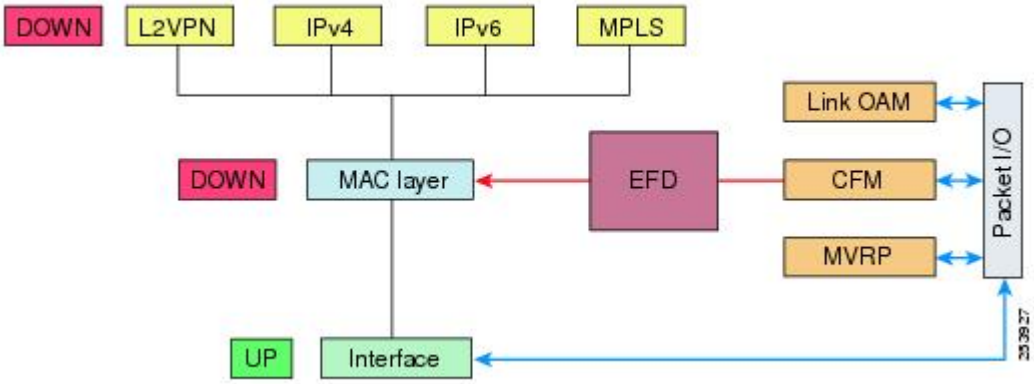

The figure shows CFM detection of an error on one of its sessions EFD signaling an error to the corresponding MAC layer for the interface. This triggers the MAC to go to a down state, which further triggers all higher level protocols (Layer 2 pseudowires, IP protocols, and so on) to go down and also trigger a reconvergence where possible. As soon as CFM detects there is no longer any error, it can signal to EFD and all protocols will once again go active.

Prerequisites for EFD

- EFD should be configured on only one side of the connection. When both sides go down because of EFD, CFM cannot be brought up as CFM frames are not sent by both the nodes.
- EFD is supported on EFP, port-channel, and port MEPs.

Limitations and Restrictions for EFD

- EFD is supported only on Down MEPs.
- When a EFD line-protocol enabled CFM service has down MEPs configured under different interfaces (EFP), EFD events such as CCM interval mismatch, MD level mismatch bring down all the interfaces containing MEPs created for this CFM service.
- EFD action is not applicable to Trunk EFPs.
- EFD actions are not successful with a forwarding-loop.

Enabling Ethernet Fault Detection for a Service

To enable Ethernet Fault Detection (EFD) for a service to achieve fast convergence, complete the following steps:

Procedure

Step 1 **enable**

Example:

```
Device> enable
```

Enables privileged EXEC mode.

- Enter your password if prompted.

Step 2 **configure terminal**

Example:

```
Device# configure terminal
```

Enters global configuration mode.

Step 3 **ethernet cfm global**

Example:

```
Device(config)# ethernet cfm global
```

Enables Ethernet CFM globally.

Step 4 **ethernet cfm domain***domain-name* **level** *level-id* [**direction outward**]

Example:

```
Device(config)# ethernet cfm domain G8032 level 4
```

Configures the CFM domain for ODU 1 and enters Ethernet CFM configuration mode.

Step 5 **service** {*ma-name* | *ma-num* | **vlan-id** *vlan-id* | **vpn-id** *vpn-id*} [**port** | **vlan** *vlan-id* [**direction down**]]

Example:

```
Device(config-ecfm)# service 8032_service evc 8032-evc vlan 1001 direction down
```

Defines a maintenance association for ODU 1 and enters Ethernet CFM service instance configuration mode.

Step 6 **continuity-check** [**interval** *time* | **loss-threshold** *threshold* | **static rmep**]

Example:

```
Device(config-ecfm-srv)# continuity-check interval 3.3ms
```

Enables the transmission of continuity check messages (CCMs).

Step 7 **efd notify g8032**

Example:

```
Device(config-ecfm-srv)# efd notify g8032
```

Enables CFM to notify registered protocols when a defect is detected or cleared, which matches the current fault alarm priority.

Step 8 **efd line-protocol**

Example:

```
Device(config-ecfm-srv)# efd line-protocol
```

Triggers line-protocol action when the CFM error-database is updated.

Step 9 **end**

Example:

```
Device(config-ecfm-srv)# end
```

Returns to user EXEC mode.

Configuration Example for EFD

The following example shows a sample output of a service instance that is brought down by an EFD action.

```
Device#show ethernet ser ins int g0/0/6
Identifier Type Interface State CE-Vlans
2 Static GigabitEthernet0/0/6 ErrorDis
```

The following example is a sample of configuration of EFD.

```
Device#show ethernet ser ins int g0/0/6
Identifier Type Interface State CE-Vlans
2 Static GigabitEthernet0/0/6 ErrorDis
```

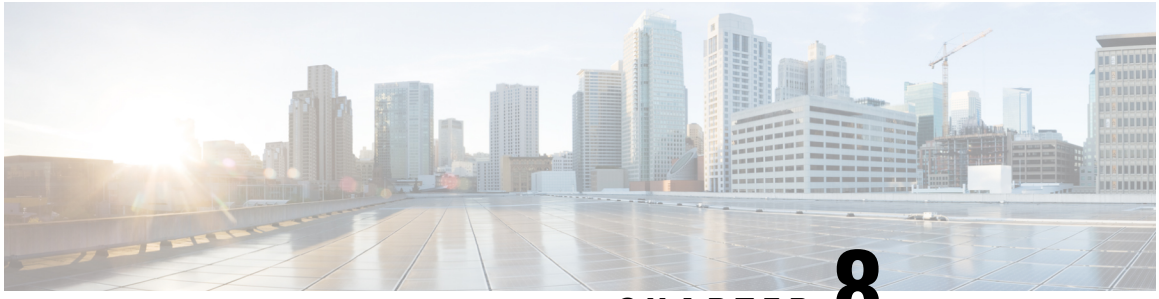

CHAPTER 8

VLAN Translation with QoS

VLAN translation provides flexibility in managing VLANs and Metro Ethernet-related services.

Layer2 VPN services are required to be deployed in the following Ethernet service type constructs:

- Ethernet Line (E-Line) in E-line remote services: Provides a point-to-point Ethernet Virtual Circuit (EVC).
- Ethernet LAN (ELAN) in E-line remote services: Provides a multipoint-to-multipoint EVC.
- ELAN local
- ELAN remote

All the remote services are transported over Ethernet Over Multi Protocol Label Switching (EoMPLS) (point-to-point) or Virtual Private LAN Service VPLS (multipoint-to-multipoint) cloud. Each service can accommodate the traffic coming from the customer either with 1 tag or 2 tags. The CoS from the customer must be passed transparently through the service to the other CPEs (UNIs).

Benefits of VLAN Translation

Earlier, the router supported Rewrite Push and Pop operations to push and remove 1 or more 802.1Q tags from the service frames only. The CoS transparency could not be achieved along with VLAN tag manipulation.

This problem is solved with the VLAN Translation feature. The current implementation of the feature allows one or more 802.1Q tags to be replaced with other 802.1Q tags and thus the desired tag manipulation can be achieved. In a scenario with two EFPs egressing the same interface, each EFP can have a different VLAN rewrite operation, which is more flexible.

VLAN translation feature includes the following functionalities:

- 1:1 VLAN translation - The VLAN of the incoming traffic (CE VLAN) is replaced by another VLAN (PE VLAN). The specification of the VLAN translation happens during the creation of the service request. The CoS field of the new tag is set to the same value as the CoS field of the existing VLAN tag.
- 2:1 VLAN translation - The double tagged (Q-in-Q) traffic at the U-PE UNI port can be mapped to different flows to achieve service multiplexing. The CoS field of the new tag is set to the inner CE-VLAN (second tag) CoS value.
- 1:2 VLAN translation - The outermost tag can be replaced with two tags. The CoS field of the new tags is set to the same value as the CoS field of the incoming 802.1Q VLAN tag.
- 2:2 VLAN translation - The outermost two tags can be replaced with other two tags. The CoS field of the new tags is set to the same value as the CoS field of the incoming Q-in-Q (outer and inner tag CoS) service frame.

Scenarios showing VLAN Translation

The following scenarios show the VLAN translation.

Scenario 1 - 1:1 VLAN Translation

Figure 4: 1:1 VLAN Translation

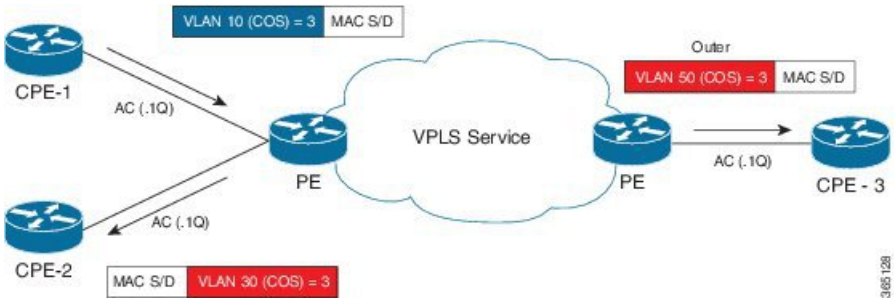

In the scenario above, t he broadcast or multicast from CPE1 has to be sent to CPE2 and CPE3. The incoming tag in the frame has a CoS value of 3. The service needs to be created that enables the CoS value to pass transparently to the other sites with the desired VLAN translation.

This behavior can be achieved using the 1:1 VLAN translation command on the service instance attached to CPE1. The Egress Service instance on Remote UPE device should be configured with the right encapsulation or Rewrite operation to achieve the correct tagging behavior (VLAN 50 on outgoing tag) for CPE3. As there is no inner tag here, the outer CoS is propagated in the newly added tag to both CPE2 and CPE3 ACs.

Scenario 2 - 2:1 VLAN Translation

Figure 5: 2:1 VLAN Translation

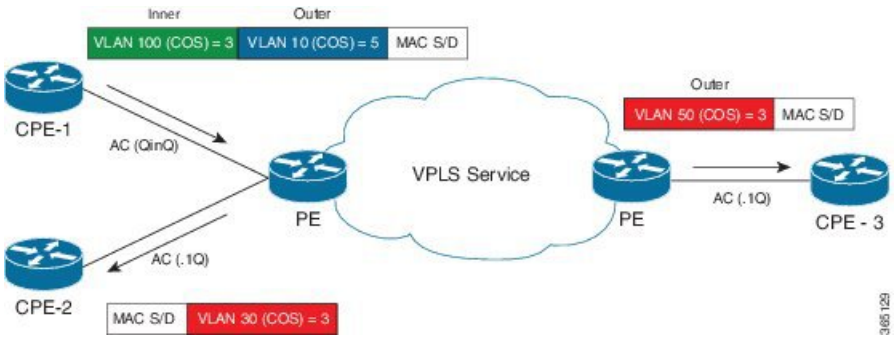

The above scenario depicts an instance of a local E-Line service, with one AC (AC1) with double VLAN ID (inner 100 andouter 10) and the other AC (AC2) with VLAN ID (30). The frame with CoS=3 from the inner VLAN 100 in AC1 has to be delivered in AC2 with VLAN 30 and CoS=3. Similarly, for remote instance, we have AC (AC3) with VLAN 50 and same inner CoS 3 should be transparently carried over MPLS cloud to AC3 from AC1. The way we can achieve this behavior on router is with 2:1 VLAN translation command on service instance connected to AC1.

In this particular scenario, since there is a inner Tag present, inner CoS will be propagated in the newly added Tag to both CPE2 and CPE3 ACs.

Limitations for VLAN Translation with QoS

- Only 1:1 and 2:1 translate rewrites are supported. 1:2 and 2:2 translations are not supported.
- Translate operation can only be applied to a unique tag matching service instance.
- VLAN Translation is not supported on TEFP, encapsulation untagged, and BDI interfaces.
- Any VLAN Translation with rewrite pop2 is not supported.
- Translation is only supported for 802.1Q (0x8100) encapsulation.
- Translation is not supported for 802.1AD (0x88A8) and Customer Ethertype (0x9100 and 0x9200).
- Egress QoS policy is not supported on Trans 2:1 and 1:1 VLAN Translation, if ingress Translation or push EFPs do not have policy.
- For 1:1 to 1:1 scenario, marking is not supported.
- Ingress POP 0 or 1:1 CoS marking is not supported.

Configuring 1:1 VLAN Translation

Procedure

Step 1 **enable**

Enables privileged EXEC mode.

- Enter your password if prompted.

Step 2 **configure terminal**

Enters global configuration mode.

Step 3 **interface** <*interface-number*>

Enters the interface configuration mode for the interface connected to the service-provider network. You can enter a physical interface or an EtherChannel port channel.

Step 4 **service instance** *id* **ethernet** {*evc-id*}

Configures an Ethernet service instance on the interface and enters Ethernet service configuration mode.

- The Ethernet service instance identifier is a per-interface service identifier and does not map to a VLAN.

Step 5 **encapsulation dot1q** {*vlan-id*}

Configures the encapsulation. Defines the matching criteria that maps the ingress dot1q or untagged frames on an interface for the appropriate service instance.

Step 6 **rewrite ingress tag translate 1-to-1 dot1q** *vlan-id* **symmetric**

Specifies the encapsulation adjustment that is to be performed on the frame ingress to the service instance.

Step 7 **bridge-domain** *domain-number*

Binds a service instance to a bridge domain instance.

Step 8 **end**

Returns to privileged EXEC mode.

Configuring 2:1 VLAN Translation

Procedure

Step 1 **enable**

Example:

```
Device> enable
```

Enables privileged EXEC mode.

- Enter your password if prompted.

Step 2 **configure terminal**

Example:

```
Device# configure terminal
```

Enters global configuration mode.

Step 3 **interface** <*interface-number*>

Enters the interface configuration mode for the interface connected to the service-provider network. You can enter a physical interface or an EtherChannel port channel.

Step 4 **service instance** *id* **ethernet** {*evc-id*}

Configures an Ethernet service instance on the interface and enters Ethernet service configuration mode.

- The Ethernet service instance identifier is a per-interface service identifier and does not map to a VLAN.

Step 5 **encapsulation dot1q** {*vlan-id*} **second-dot1q** {*vlan-id*}

Configures the encapsulation. Defines the matching criteria that maps the ingress dot1q or untagged frames on an interface for the appropriate service instance.

- Use the **second-dot1q** keyword and the *vlan-id* argument to specify the VLAN tags to be terminated on the subinterface.

Step 6 **rewrite ingress tag translate 2-to-1 dot1q** *vlan-id* **symmetric**

Specifies the encapsulation adjustment that is to be performed on the frame ingress to the service instance.

Step 7 **bridge-domain** *domain-number*

Binds a service instance to a bridge domain instance.

Step 8 **end**

Returns to privileged EXEC mode.

Configuring policy for ingress QoS

Procedure

Step 1 **enable**

Enables privileged EXEC mode.

- Enter your password if prompted.

Step 2 **configure terminal**

Enters global configuration mode.

Step 3 **class-map match-all** *cos value*

Determine how packets are evaluated when the packets meet all of the match criteria.

Step 4 **match cos** *value*

Matches a packet on the basis of a layer 2 CoS marking,

Step 5 **policy-map** *policy-name*

Creates or specifies the name of the traffic policy and enters policy-map configuration mode.

Step 6 **class** *class-name*

Specifies the name of a traffic class and enters policy-map class configuration mode.

Step 7 **set cos** *cos value*

Sets the Class of Service (CoS) value of an outgoing packet.

Step 8 **police cir** *value*

Need Information.

Step 9 **interface** *interface-number*

Enters the interface configuration mode for the interface connected to the service-provider network. You can enter a physical interface or an EtherChannel port channel.

Step 10 **no ip address**

Removes an IP address or disable IP processing.

Step 11 **load-interval** *seconds*

Changes the sampling interval for statistics collections on interfaces

Step 12 **service instance** *id* **ethernet** *evc-id*

Configures an Ethernet service instance on the interface and enters Ethernet service configuration mode.

- The Ethernet service instance identifier is a per-interface service identifier and does not map to a VLAN.

Step 13 **encapsulation dot1q** *vlan-id* **second-dot1q** *vlan-id*

Configures the encapsulation. Defines the matching criteria that maps the ingress dot1q or untagged frames on an interface for the appropriate service instance.

- Use the **second-dot1q** keyword and the *vlan-id* argument to specify the VLAN tags to be terminated on the subinterface.

Step 14 **rewrite ingress tag translate 2-to-1 dot1q** *vlan-id* **symmetric**

Specifies the encapsulation adjustment that is to be performed on the frame ingress to the service instance.

Step 15 **service-policy input** *policy-map-name*

Attaches a policy map to an interface.

Step 16 **bridge-domain** *domain-number*

Binds a service instance to a bridge domain instance.

Step 17 **end**

Returns to privileged EXEC mode.

Configuration Example for 1:1 VLAN Translation

The following example shows the sample configuration for 1:1 VLAN Translation.

```
service instance 50 ethernet
encapsulation dot1q 50
rewrite ingress tag translate 1-to-1 dot1q 500 symmetric
bridge-domain 50
```

Configuration Example for 2:1 VLAN Translation

The following example shows the sample configuration for 2:1 VLAN Translation.

```
service instance 50 ethernet
encapsulation dot1q 10 second-dot1q 20
rewrite ingress tag translate 2-to-1 dot1q 500 symmetric
bridge-domain 50
```

Configuration Example for policing ingress QoS

The following example shows the sample configuration of policing ingress QoS.

```
class-map match-all cos6
match cos 6
class-map match-all cos3
match cos 3
policy-map mark_cos3to6
class cos3
set cos 6
police cir 900000000
interface TenGigabitEthernet0/0/12
no ip address
load-interval 30
service instance 1 ethernet
encapsulation dot1q 10 second-dot1q 20
rewrite ingress tag translate 2-to-1 dot1q 30 symmetric
service-policy input mark_cos3to6
bridge-domain 1
```

Configuration Verifications for VLAN Translation with QoS

The following sections show the configuration verifications for VLAN Translation with QoS.

Verifying the VLAN configuration

The **show running-config interface [number]** command displays and verifies the VLAN configuration.

```
#show running-config interface gigabitEthernet 0/0/5
interface GigabitEthernet0/0/5
 no ip address
 media-type auto-select
```

```
 negotiation auto
 service instance 1 ethernet
  encapsulation dot1q 1
  rewrite ingress tag translate 1-to-1 dot1q 2 symmetric
  bridge-domain 1
 end
```

Verifying policy-map on ingress QoS

The **show policy-map interface** command verifies the policy-map on ingress QoS.

```
show policy-map interface gig0/0/3 service instance 1
 GigabitEthernet0/0/3: EFP 1

  Service-policy input: in_policy_cos

    Class-map: cos3 (match-all)
      7077065 packets, 452932160 bytes
      30 second offered rate 19984000 bps, drop rate 0000 bps
      Match: cos  3
      QoS Set
        cos 4
          Marker statistics: Disabled

    Class-map: class-default (match-any)
      0 packets, 0 bytes
      30 second offered rate 0000 bps, drop rate 0000 bps
      Match: any
```

Verifying policy-map on egress QoS

The **show policy-map interface** command verifies the policy-map on egress QoS.

```
show policy-map interface gig0/0/4 service instance 1
 GigabitEthernet0/0/4: EFP 1

  Service-policy output: classify_policy

    Class-map: class_cos4 (match-all)
      6891220 packets, 468602960 bytes
      30 second offered rate 21359000 bps
      Match: cos  4

    Class-map: class-default (match-any)
      0 packets, 0 bytes
      30 second offered rate 0000 bps, drop rate 0000 bps
      Match: any
```

Verifying the QoS Labels

The **show platform hardware pp active feature qos label structs** command displays the QoS labels in use.

```
#show platform hardware pp active feature qos label structs
PRINTING BIT LIST OF LABELS IN USE
0-3,8-15,125-127
Qos Label = 1, Ref_count = 1, Set_ref_count =1, edir = 0
Label Key is as follows -
outer_dscp = 0, inner_dscp = 0,outer_cos = 0, inner_cos = 0
 outer_cfi = 0, inner_cfi = 0,outer_exp = 0, inner_exp = 5
mpls_tunnel_bit = 1, qos_group = 0,discard_class = 0, rwtype = 0, set_action = 1
```

```
Match criteria bit list for this label:
8,11
PRINTING BIT LIST OF LABELS IN USE
0-3,8-15,125-127
Qos Label = 2, Ref_count = 1, Set_ref_count =1, edir = 0
Label Key is as follows -
outer_dscp = 0, inner_dscp = 0,outer_cos = 0, inner_cos = 0
 outer_cfi = 0, inner_cfi = 0,outer_exp = 0, inner_exp = 0
mpls_tunnel_bit = 1, qos_group = 0,discard_class = 0, rwtype = 0, set_action = 1
Match criteria bit list for this label:
8,11
```

Verifying Egress TCAM Details

The **show platform hardware pp active feature qos tcam eqos 0 all** command displays and verifies the egress TCAM details.

```
#show platform hardware pp active feature qos tcam eqos 0 all
FIELD 0: total 125, used 60, min 125, first_entry 0, hole:0, size:0
==========================================================================
FIELD 1: total 0, used 0, min 0, first_entry 125, hole:0, size:0
==========================================================================
FIELD 2: total 799, used 0, min 0, first_entry 125, hole:0, size:0
==========================================================================
FIELD 3: total 50, used 0, min 50, first_entry 924, hole:0, size:0
==========================================================================
index 0: 1 contiguous entries in same hw_handle, aclType EGRESSCLASSIFY,lookupTable NA
index 1: 1 contiguous entries in same hw_handle, aclType EGRESSCLASSIFY,lookupTable NA
index 2: 1 contiguous entries in same hw_handle, aclType EGRESSCLASSIFY,lookupTable NA
index 3: 1 contiguous entries in same hw_handle, aclType EGRESSCLASSIFY,lookupTable NA
index 4: 1 contiguous entries in same hw_handle, aclType EGRESSCLASSIFY,lookupTable NA
```

Verifying TCAM Index Details

The **show platform hardware pp active feature qos tree service-instance <num> port-number <num> input tcam-info** command displays the TCAM index details pertaining to the specified interface.

```
Tcam-handle=2253
        First-Index=184
        Last-Index=249
        Total-Count=66
```

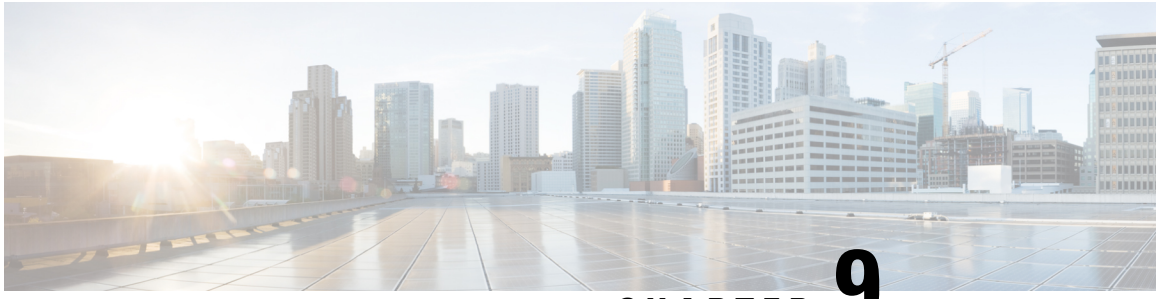

CHAPTER 9

Microwave ACM Signaling Configuration and EEM Integration

This feature module describes the Microwave Adaptive Code Modulation (ACM) Signaling and Embedded Event Manager (EEM) integration, which enables the microwave radio transceivers to report link bandwidth information to an upstream Ethernet switch and take action on the signal degradation to provide optimal bandwidth.

Prerequisites

- The microwave transceiver in the network topology must support adaptive bandwidth modulation and bandwidth vendor specific message (BW-VSM)/Ethernet Bandwidth Notification Message (ETH-BNM), and the microwave transceiver must support the Ethernet Connectivity Fault Management (CFM) extension for microwave devices as defined by Cisco. The BW-VSM/ETH-BNM is defined to report the available bandwidth information from the microwave radio to the Ethernet switch.
- In a heterogeneous ring topology, all devices connected directly to the microwave transceiver must support signal degradation (SD) functions. Devices not connected directly to the microwave transceiver can be standard-compliant nodes or enhanced SD-capable nodes.
- In a homogeneous ring topology, all links must be microwave links and all devices must support microwave SD-based ring protection.
- A ring topology with multiple microwave links can experience a signal degradation condition on one or more of the microwave links. Only one signal degradation condition per ring instance is supported. This support is provided on a first-come, first-serve basis, per ring instance.
- The source MAC address must be an unique MAC address. It can be the MAC address of the Ethernet port or the Bridge.
- The destination MAC address must be set to the CCM multicast address for the associated maintenance level (a multicast address is used to avoid discovery of MAC addresses).
- The microwave transceiver in the network topology must support bandwidth vendor specific message (BW-VSM) (The BW-VSM is defined to report the available bandwidth information from the microwave radio to the Ethernet switch.).
- The BW-VSM/ETH-BNM may be sent untagged, or it may be transmitted with a configurable valid IEEE 802.1Q VLAN tag.

- The BW-VSM/ETH-BNM must be associated with maintenance level 0. The microwave equipment should allow the network operator to associate the message with a valid maintenance level in the range 0 to 7 per ITU-T Y.1731 / IEEE 802.1ag-2007.

- Feature Overview, on page 136
- Microwave ACM Signaling Configuration and EEM Integration, on page 137
- Configuration for Microwave ACM Signaling and EEM Integration Examples, on page 144

Feature Overview

Microwave links are often used in Ethernet access ring topologies and the bandwidth provided by the microwave link depends on environmental factors like fog, rain, and snow, which can drastically affect the bandwidth.

This feature relies on the Ethernet CFM to assess the environmental conditions on either end of the microwave link and automatically change the modulation to provide optimal bandwidth. The Ethernet CFM monitors the microwave link bandwidth, and when a link degradation is detected, notifies the router to take action on the degraded microwave link.

In IP/MPLS, the nodes are unaware of any changes to the bandwidth on the microwave link and the Gigabit Ethernet connection to the nodes remain constant. To ensure optimal routing and traffic transport across the access network, a mechanism has been implemented to notify the IP/MPLS access nodes of any ACM events on the microwave links. This enables microwave radio transceivers, which support ACM, to report link bandwidth information to an upstream Ethernet switch.

The vendor-specific message (VSM) and Ethernet Bandwidth Notification Message (ETH-BNM) in Y.1731 is used to notify Cisco routers of ACM events, and the bandwidth available on the microwave link. Acting on this information, the node can change the Hierarchical Quality of Service (H-QoS), adjust the Interior Gateway Protocol (IGP) metric of the link to the new capacity or remove the degraded link.

H-QoS Policy Adjustment

H-QoS policy adjustment is the process of adjusting the egress H-QoS policy parameters on the IP/MPLS access node connected to the microwave link. This modifies the parent shaper rate to match the current bandwidth of the microwave link. It also adjusts the child class parameters to ensure correct priority and bandwidth-guaranteed traffic.

If the available bandwidth is less than the total bandwidth required by Expedited Forwarding (EF) and Assured Forwarding (AF) classes, the operator can choose to drop AF class traffic or remove the link from the service.

IGP Metric Adjustment

The IP/MPLS access node can adjust the IGP metric on the microwave link to align it with the available bandwidth. This will trigger an IGP SPF recalculation, allowing the IGP to get the correct bandwidth for routing traffic.

Link Removal

Link removal is the process of removing the microwave link from the IGP. This occurs when the bandwidth loss breaches the threshold set by the operator. It sets off the resiliency mechanisms in the network, and the degraded link is bypassed, resulting in minimal traffic loss. The degraded link is not brought administratively down. When it is up, the microwave equipment can signal to the access node about its status and usability.

Benefits

- The IP/MPLS access network adapts intelligently to the microwave capacity change by:
  - optimizing routing
  - controlling congestion
  - enabling loss protection.
- Microwave ACM changes are signaled through a Y.1731 VSM/G.8031/Y.1731 (ETH-BNM) to the IP/MPLS access node.
- The IP/MPLS access node adapts the IGP metric of the link to the new capacity.
- The IP/MPLS access node can change the H-QOS policy on the interface with the microwave system allowing EF traffic to survive.
- The IP/MPLS access node can remove a degraded link from SPF triggering a loss protection.

Microwave ACM Signaling Configuration and EEM Integration

This section describes how to configure Microwave ACM Signaling and EEM Integration:

Configuring Connectivity Fault Management

To configure CFM between the microwave outdoor unit (ODU) and the router, complete the following steps:

Note For a ring topology, you should configure CFM between the microwave ODU and the router. You must configure two VLANs to the two microwave ODUs, to process the vendor specific message (VSM)/Ethernet Bandwidth Notification Message (ETH-BNM) and trigger the Embedded Event Manager (EEM).

Procedure

Step 1 **enable**

Example:

```
Router> enable
```

Enables privileged EXEC mode.

- Enter your password if prompted.

Step 2 **configure terminal**

Example:

```
Router# configure terminal
```

Enters global configuration mode.

Step 3 **ethernet cfm domain** *domain-name* **level** *level-id*

Example:

```
Router(config)# ethernet cfm domain outer level 3
```

Defines a CFM maintenance domain at a particular maintenance level and enter Ethernet CFM configuration mode.

- domain-name—String of a maximum of 154 characters that identifies the domain.
- level-id—Integer from 0 to 7 that identifies the maintenance level.

Step 4 **service** *csi-id* **evc** *evc-name* **vlan** *vlan-id* **direction down**

Example:

```
Router(config-ether-cfm)# service microwave1 evc V60 vlan 60 direction down
```

Sets a universally unique ID for a customer service instance (CSI) within a maintenance domain.

- csi-id—String of a maximum of 100 characters that identifies the CSI.
- evc—Specifies the EVC.
- evc-name—String that identifies the EVC.
- vlan—Specifies the VLAN.
- vlan-id—String that identifies the VLAN ID. Range is from 1 to 4094.
- direction—Specifies the service direction.
- down—Specifies the direction towards the LAN.

Step 5 **continuity-check**

Example:

```
Router(config-ecfm-srv)# continuity-check
```

Enables the transmission of continuity check messages (CCMs).

Step 6 **exit**

Example:

```
Router(config-ecfm-srv)# exit
```

Exits Ethernet CFM service configuration mode and enters global configuration mode.

Step 7 **ethernet evc** *evc-id*

Example:

```
Router(config)# ethernet evc V60
```

Defines an EVC and enters EVC configuration mode.

- evc-id—String from 1 to 100 characters that identifies the EVC.

Step 8 **exit**

Example:

```
Router(config-evc)# exit
```

Exits Ethernet EVC configuration mode and enters global configuration mode.

Step 9 **interface** *type number*

Example:

```
Router(config)# interface GigabitEthernet0/0/1
```

Specifies an interface type and number, and enters interface configuration mode.

Step 10 **service instance** *id* **ethernet**

Example:

```
Router(config-if)# service instance 60 ethernet 60
```

Configures an Ethernet service instance on an interface.

- id—Integer that uniquely identifies a service instance on an interface.

Step 11 **encapsulation dot1q** *vlan-id*

Example:

```
Router(config-if)# encapsulation dot1q 60
```

Enables IEEE 802.1Q encapsulation of traffic on a specified interface in a VLAN.

- vlan-id—Virtual LAN identifier.

Step 12 **rewrite ingress tag pop 1 symmetric**

Example:

```
Router(config-if)# rewrite ingress tag pop 1 symmetric
```

Specifies the encapsulation adjustment to be performed on a frame ingressing a service instance.

- pop—Removes a tag from a packet.
- 1—Specifies the outermost tag for removal from a packet.
- symmetric—Indicates a reciprocal adjustment to be done in the egress direction. For example, if the ingress pops a tag, the egress pushes a tag and if the ingress pushes a tag, the egress pops a tag.

Step 13 **bridge-domain** *bridge-domain-id*

Example:

```
Router(config-if)# bridge-domain 60
```

Enables RFC 1483 ATM bridging or RFC 1490 Frame Relay bridging to map a bridged VLAN to an ATM permanent virtual circuit (PVC) or Frame Relay data-link connection identifier (DLCI).

- bridge-domain-id—Bridge domain identifier.

Step 14 **exit**

Example:

```
Router(config-if)# exit
```

Exits interface configuration mode.

Configuring an Embedded Event Manager Applet

Before you begin

- One switch virtual interface (SVI) or bridge domain is required per physical link.
- One EEM script is required per physical link.
- A dedicated line VTY without AAA is required for the EEM script to perform without any interruption.

Note The EEM script configures the metric on the microwave link and adjusts the QoS policy based on the Ethernet event parameters.

EEM built-in environment variables are a subset of the Cisco-defined environment variables and the built-in variables are available to EEM applets only. The built-in variables can be read-only or can be read and write and these variables may apply to one specific event detector or to all event detectors. For more information about built-in environment variables, see Embedded Event Manager Configuration Guide, Cisco IOS XE Release 3S.

Procedure

Step 1 **enable**

Example:

```
Router> enable
```

Enables privileged EXEC mode.

- Enter your password if prompted.

Step 2 **configure terminal**

Example:

```
Router# configure terminal
```

Enter global configuration mode.

Step 3 **event manager applet** *applet-name*

Example:

```
Router(config)# event manager applet ACM61
```

Registers an applet with the Embedded Event Manager (EEM) and enters applet configuration mode.

- *applet-name*—Name of the applet file.

Step 4 **event tag** *event-tag* **ethernet microwave clear-sd** {*interface type number*}

Example:

```
Router(config-applet)# event tag event_cd ethernet microwave clear-sd interface
GigabitEthernet0/0/1
```

Specifies the event criteria for an EEM applet that is run by matching a Cisco IOS command-line interface (CLI).

- *event-tag* —Specifies a tag using the event-tag argument that can be used with the trigger command to support multiple event statements within an applet.

Step 5 **event tag** *event-tag* **ethernet microwave sd** {*interface type number*} **threshold** *mbps*

Example:

```
Router(config-applet)# event tag event_sd ethernet microwave sd interface GigabitEthernet0/0/1
 threshold 1000
```

Specifies the event criteria for an EEM applet that is run by matching a Cisco IOS CLI.

Step 6 **action** *action-id* **set** *variable-name variable-value*

Example:

```
Router(config-applet)# action 110 set ifname "vlan $_svi61"
```

Sets the value of a variable when an EEM applet is triggered.

- *action-id*—Unique identifier that can be any string value. Actions are sorted and run in ascending alphanumeric key sequence using the label as the sort key. If the string contains embedded blanks, enclose it in double quotation marks.
- *variable-name*—Name assigned to the variable to be set.
- *variable-value*—Value of the variable.

Step 7 **action** *action-id* **cli command** *cli-string*

Example:

```
Router(config-applet)# action 458 cli command "event manager applet ACM61"
```

Specifies the action of executing a Cisco IOS CLI when an EEM applet is triggered.

- *action-id*—Unique identifier that can be any string value. Actions are sorted and run in ascending alphanumeric key sequence using the label as the sort key. If the string contains embedded blanks, enclose it in double quotation marks.

- **cli command**—Specifies the message to be sent to the Cisco IOS CLI.
- *cli-string* —CLI string to be executed. If the string contains embedded blanks, enclose it in double quotation marks.

Step 8 **exit**

Example:

```
Router(config-applet)# exit
```

Exits applet configuration mode.

Configuring Event Handler

To configure the microwave event handler, which runs hold-off timer, loss threshold, and fading wait-to-restore (WTR) timers that are configurable per interface, complete the following steps:

Procedure

Step 1 **enable**

Example:

```
Router> enable
```

Enables privileged EXEC mode.

- Enter your password if prompted.

Step 2 **configure terminal**

Example:

```
Router# configure terminal
```

Enters global configuration mode.

Step 3 **interface** *type number*

Example:

```
Router(config)# interface vlan 40
```

Specifies an interface type and number, and enters interface configuration mode.

Step 4 **ethernet event microwave hold-off** *seconds*

Example:

```
Router(config-if)# ethernet event microwave hold-off 30
```

Configures the settings of the Ethernet microwave event.

- hold-off—Specifies the microwave bandwidth degradation hold-off time, in seconds. This time is used to prevent changes in the state of the network node as a result of signal degradation (SD) occurrences.
- seconds—Hold off time, in seconds. The valid values range from 0 to 600, with a default value of 0.

Step 5 **ethernet event microwave loss-threshold** *number-of-messages*

Example:

```
Router(config-if)# ethernet event microwave loss-threshold 100
```

Configures the settings of the Ethernet microwave event.

- loss-threshold—Specifies the number of bandwidth Vendor-Specific Messages (VSM)/Ethernet Bandwidth Notification Message (ETH-BNM) sent from the microwave transceiver to the Cisco device.
- number-of-messages—Number of bandwith VSMs/ETH-BNMs. The valid values range from 2 to 255, with a default value of 3.

Step 6 **ethernet event microwave wtr** *seconds*

Example:

```
Router(config-if)# ethernet event microwave wtr 45
```

Configures the settings of the Ethernet microwave event.

- wtr—Specifies the wtr time. This time is used to prevent changes in the state of the network node as a result of recovery events after an SD occurrence.
- seconds—WTR time, in seconds. The valid values range from 0 to 600, with a default value of 10.

Verifying the Microwave ACM Signaling and EEM Integration Configuration

To verify the microwave ACM and EEM integration configuration, use the show commands described in the following examples.

To display microwave bandwidth status information of an interface, use the following show command.

```
Router# show ethernet event microwave status [interface]
Microwave Bandwidth Status for GigabitEthernet0/0/1
  State:                    SIGNAL_DEGRADED
  Hold Time:                0 seconds
  Restore Time:             10 seconds
  Loss Threshold:           3
  Total VSM Receive Count:  0
  Total VSM Drop Count:     0
  Total BNM Receive Count:  4
  Total BNM Drop Count:     0
  Sender Address 64f6.9d67.ac02
    State:                          SIGNAL_DEGRADED
    Elapsed time in this state:     00:00:25
    Nominal Bandwidth:              500 Mbps
    Current Bandwidth:              100 Mbps
    Lowest Bandwidth:               100 Mbps
    Last VSM Received:              Never
```

```
    VSM Receive Count:               0
    VSM Drop Count:                  0
    VSM Period:                      60 second
    Last BNM Received:               Tue Jul 25 14:36:09.895
    BNM Receive Count:               4
    BNM Drop Count:                  0
    BNM Period:                      60 seconds
    Hold Timer:                      Not running
    Wait-to-Restore Timer:           Not running
    Periodic Timer:                  184 seconds remaining
    Transitions into degraded state: 4
```

To display microwave bandwidth statistics of an interface, use the following show command.

```
Router# show ethernet event microwave statistic [interface]

Microwave Bandwidth Statistics for GigabitEthernet0/0/2
 Total VSM Receive Count : 145
 Total VSM Drop Count : 0
 Number of transitions into Degraded state : 2
```

Configuration for Microwave ACM Signaling and EEM Integration Examples

Sample configurations of Microwave ACM Signaling and EEM Integration feature.

Example: Configuring CFM

The following is a sample configuration of CFM.

```
!
ethernet cfm domain outer level 3
service microwave1 evc V60 vlan 60 direction down
  continuity-check
!
ethernet evc V60
!
interface GigabitEthernet0/0/1
!
service instance 60 ethernet V60
  encapsulation dot1q 60
  rewrite ingress tag pop 1 symmetric
  bridge-domain 60
!
```

Example: Configuring EEM Applet

The following is a sample EEM script to configure metric on a microwave link and adjust a QoS policy according to the ethernet event parameters sent through OAM.

Note You should have one SVI/BD per physical link. Also, one EEM script is required per physical link. In all, there should be two EEM scripts and two SVI/BDs.

Note The threshold in the EEM script should be set to the nominal bandwidth value. If this value is unknown, we recommend setting the threshold to 1000. The EEM script adjusts the nominal bandwidth using the following vendor-specific message (VSM)/Ethernet Bandwidth Notification Message (ETH-BNM): **`action 460 cli command "event tag event_sd ethernet microwave sd interface GigabitEthernet0/3/0 threshold $nb"`**

Note The EEM script supports the **bandwidth percent** command, but does not support the **bandwidth remaining percent** command.

```
no event manager applet ACM62
Router#show run | sec event manager
event manager environment _eem_mode 1
event manager environment _bdi60 60
event manager environment _ring_nodes 5
event manager applet ACM62
 event tag event_cd ethernet microwave clear-sd interface GigabitEthernet0/0/1
 event tag event_sd ethernet microwave sd interface GigabitEthernet0/0/1 threshold 400
 trigger
  correlate event event_cd or event event_sd
 action 100 set olc "100"
 action 102 set dlc "1"
 action 104 set n "$_ring_nodes"
 action 106 set cb "$_ethernet_current_bw"
 action 108 set nb "$_ethernet_nominal_bw"
 action 110 set ifname "bdi $_bdi60"
 action 112 set cpmap_bw "0"
 action 114 set pri_bw "0"
 action 116 set ppmap "0"
 action 118 set s1 "EEM-"
 action 120 set zeros "000000"
 action 122 set cb_bps "$cb$zeros"
 action 124 set nb_bps "$nb$zeros"
 action 126 set ifcfg "1"
 action 127 set class-type "0"
 action 130 cli command "enable"
 action 132 cli command "conf t"
 action 160 if $cb eq "$nb"
 action 162  cli command "interface $_ethernet_intf_name"
 action 163  cli command "no service-policy output $s1$ppmap"
 action 164  cli command "service-policy output $ppmap"
 action 180 elseif $_eem_mode le 1
 action 181  if $ppmap eq "0"
 action 182   cli command "do show run int $_ethernet_intf_name | i service-policy output"
 action 186   regexp "service-policy output (.*)\n" "$_cli_result" line pmap
 action 192   string trimright "$pmap"
 action 196   set pmap "$_string_result"
 action 197  else
 action 198   set pmap "$ppmap"
 action 199  end
 action 200  syslog msg "s1pmap 200: $s1$pmap"
 action 214  cli command "do show run policy-map $pmap | i service-policy"
 action 216  regexp "service-policy (.*)\n" "$_cli_result" line cpmap
 action 217  string trimright "$cpmap"
 action 218  set cpmap "$_string_result"
 action 220  cli command "do show run policy-map $cpmap"
```

```
action 221  regexp "class .*!" "$_cli_result" string
action 223  cli command "policy-map $s1$cpmap"
action 226  foreach var "$string" "\n"
action 228   regexp "class (.*)" "$var" match cname
action 230   if $_regexp_result eq "1"
action 233    syslog msg "233: cname: $cname"
action 234   end
action 236   regexp "(police) (.*)" "$var" line ef_bw_perc
action 238   if $_regexp_result eq "1"
action 256    string trimright "$ef_bw_perc"
action 263    set bw_demand "$_string_result"
action 264    add $cpmap_bw $_string_result
action 266    syslog msg "266: cpmap_bw: $_result, bw_demand: $bw_demand"
action 268    set cpmap_bw "$_result"
action 274    add $pri_bw $bw_demand
action 282    set match1 "police $bw_demand"
action 283    set match2 "police $bw_demand"
action 284    set class-type "1"
action 286   end
action 288   regexp "(bandwidth) percent (.*)" "$var" line cmd ef_bw_perc
action 290   if $_regexp_result eq "1"
action 291    string trimright "$ef_bw_perc"
action 294    divide $nb_bps 100
action 296    multiply $_result $_string_result
action 298    set bw_demand "$_result"
action 300    add $cpmap_bw $_result
action 302    syslog msg "266: cpmap_bw: $_result, bw_demand: $bw_demand"
action 304    set cpmap_bw "$_result"
action 306    syslog msg "269: cpmap_bw sub-sum: $cpmap_bw"
action 308    set match1 "$match"
action 310    set match2 "bandwidth percent 1"
action 312    set class-type "2"
action 314   end
action 316   if $class-type eq "1"
action 318    append cfg_out1 "priority"
action 320    append cfg_out1 "$match1 \n"
action 322    append cfg_out2 "priority"
action 324    append cfg_out2 "$match2 \n"
action 325    set class-type "0"
action 326   elseif $class-type eq 2
action 328    append cfg_out1 "$match1 \n"
action 330    append cfg_out2 "$match2 \n"
action 331    set class-type "0"
action 332   else
action 334    append cfg_out1 "$var \n"
action 336    append cfg_out2 "$var \n"
action 338   end
action 340   syslog msg "310: cpmap_bw sum: $cpmap_bw"
action 342   if $cpmap_bw lt "$cb_bps"
action 344    set cfg_out "$cfg_out1"
action 346   elseif $pri_bw lt $cb_bps
action 348    set cfg_out "$cfg_out2"
action 350   else
action 352    set metric "1000000"
action 354    set ifcfg "0"
action 356   end
action 358   if $ifcfg eq "1"
action 360    foreach var "$cfg_out" "\n"
action 362     cli command "$var"
action 364    end
action 366   end
action 367  end
action 368  cli command "policy-map $s1$pmap"
action 370  syslog msg "config 334: policy-map $s1$pmap"
```

```
 action 372  cli command "class class-default"
 action 374  cli command "shape average $cb_bps"
 action 376  cli command "service-policy $s1$cpmap"
 action 378  cli command "int $_ethernet_intf_name"
 action 380  cli command "no service-policy output $pmap"
 action 382  cli command "service-policy output $s1$pmap"
 action 384 end
 action 400 if $_eem_mode ge "1"
 action 402  multiply $n $cb
 action 404  divide $_result $nb
 action 406  syslog msg "406: cb: $cb nb: $nb result: $_result"
 action 408  set m "$_result"
 action 410  syslog msg "m: $m"
 action 412  increment n
 action 414  subtract $n $m
 action 416  multiply $_result $olc
 action 418  if $ifcfg eq "0"
 action 420   set dlc "$metric"
 action 422  else
 action 424   set dlc "$_result"
 action 426  end
 action 428  syslog msg "428: n:$n m:$m olc:$olc dlc:$dlc result:$_result intf: $ifname"
 action 434  cli command "int $ifname"
 action 436  cli command "do show run int $ifname"
 action 438  string first "ip router isis" "$_cli_result"
 action 440  if $_string_result ne "-1"
 action 442   cli command "isis metric $dlc"
 action 444   cli command "do show ip ospf int | i $ifname"
 action 446   string first "$ifname" "$_cli_result"
 action 448  elseif $_string_result ne -1
 action 450   cli command "ip ospf cost $dlc"
 action 452  end
 action 454 end
 action 456 syslog msg "The EEM script executed"
 action 458 cli command "event manager applet ACM62"
 action 460 cli command "event tag event_sd ethernet microwave sd interface
GigabitEthernet0/0/1 threshold $nb"
 action 462 if $ppmap eq "0"
 action 464  if $_eem_mode le "1"
 action 466   cli command "action 116 set ppmap $pmap"
 action 468  end
 action 470 end
Router#
```

Example: Configuring Event Handler

The following is a sample configuration of Event Handler.

```
event manager applet mw_ring_sd1
 event ethernet microwave sd interface gigabitethernet 0/0/1 threshold 400
 action 1 switch ring g8032 ringA instance 1
interface gigabitethernet 0/0/1
 ethernet event microwave hold-off 30
 ethernet event microwave loss-threshold 100
 ethernet event microwave wtr 45
```

CHAPTER 10

Using Link Layer Discovery Protocol in Multivendor Networks

Link Layer Discovery Protocol (LLDP), standardized by the IEEE as part of 802.1ab, enables standardized discovery of nodes, which in turn facilitates future applications of standard management tools such as Simple Network Management Protocol (SNMP) in multivendor networks. Using standard management tools makes physical topology information available and helps network administrators detect and correct network malfunctions and inconsistencies in configuration.

The Cisco implementation of LLDP is based on the IEEE 802.1ab standard.

Prerequisites for Using Link Layer Discovery Protocol in Multivendor Networks

The Type-Length-Value (TLV) types must be 0 through 127.

Restrictions for Using Link Layer Discovery Protocol in Multivendor Networks

Use of LLDP is limited to 802.1 media types such as Ethernet, Token Ring, and FDDI networks.

Information About Using Link Layer Discovery Protocol in Multivendor Networks

IEEE 802.1ab LLDP

IEEE 802.1ab Link Layer Discovery Protocol (LLDP) is an optional link layer protocol for network topology discovery in multivendor networks. Discovery information includes device identifiers, port identifiers, versions, and other details. As a protocol that aids network management, LLDP provides accurate network mapping, inventory data, and network troubleshooting information.

LLDP is unidirectional, operating only in an advertising mode. LLDP does not solicit information or monitor state changes between LLDP nodes. LLDP periodically sends advertisements to a constrained multicast address. Devices supporting LLDP can send information about themselves while they receive and record information about their neighbors. Additionally, devices can choose to turn off the send or receive functions independently. Advertisements are sent out and received on every active and enabled interface, allowing any device in a network to learn about all devices to which it is connected. Applications that use this information include network topology discovery, inventory management, emergency services, VLAN assignment, and inline power supply.

Note LLDP and Cisco Discovery Protocol can operate on the same interface.

The figure below shows a high-level view of LLDP operating in a network node.

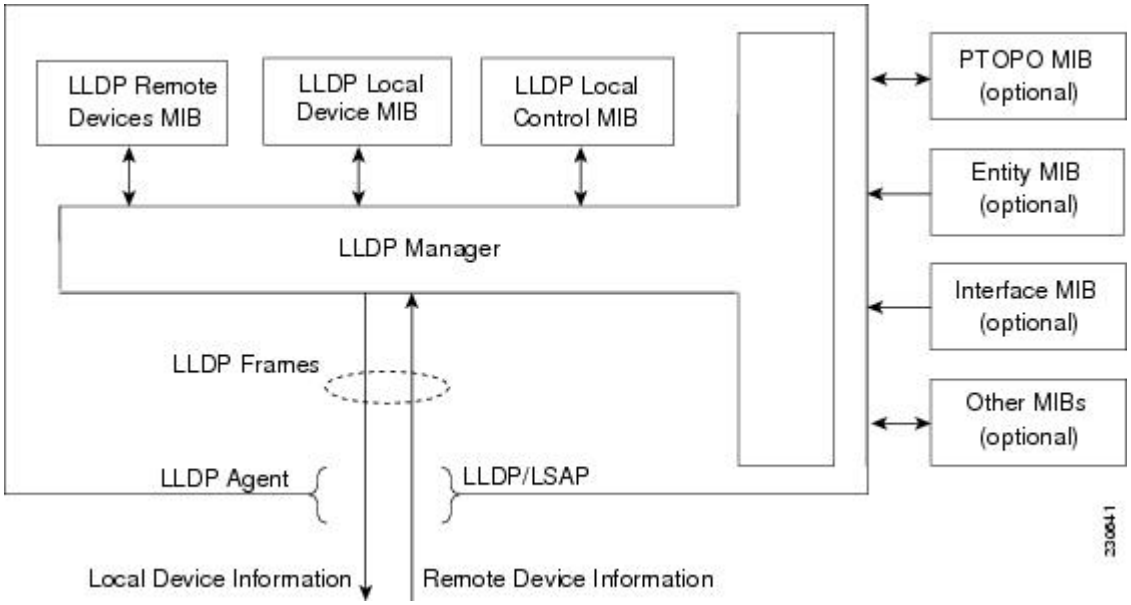

When you configure LLDP or Cisco Discovery Protocol location information on a per-port basis, remote devices can send Cisco medianet location information to the switch. For more information, see the *Using Cisco Discovery Protocol module.*

TLV Elements

Link Layer Discovery Protocol (LLDP) uses Type-Length-Values (TLVs) to exchange information between network and endpoint devices. TLV elements are embedded in communications protocol advertisements and used for encoding optional information. The size of the type and length fields is fixed at 2 bytes. The size of the value field is variable. The type is a numeric code that indicates the type of field that this part of the message represents, and the length is the size of the value field, in bytes. The value field contains the data for this part of the message.

By defining a network-policy profile TLV, you can create a profile for voice and voice signalling by specifying the values for VLAN, class of service (CoS), differentiated services code point (DSCP), and tagging mode. These profile attributes are then maintained centrally on the switch and propagated to the phone.

- Power management TLV—Allows switches and phones to convey power information, such as how the device is powered on, power priority, and the power required by the device. Supports advertisement of fractional wattage power requirements, endpoint power priority, and endpoint and network connectivity-device power status. However, it does not support power negotiation between the endpoint and the network connectivity devices. When LLDP is enabled and a port is powered on, the power TLV determines the actual power requirement of the endpoint device, so that the system power budget can be adjusted. The switch processes the requests and either grants or denies power based on the current power budget. If the request is granted, the switch updates the power budget. If the request is denied, the switch turns off power to the port, generates a syslog message, and updates the power budget.

Note A system power budget is the default power allocated to a device based on its device class. However, the total power sourced from a switch is finite, and power budgeting is done by the power module based on the number of ports already being served, total power that can be served, and number of new ports that are requesting.

- Inventory management TLV—Allows an endpoint to send detailed inventory information about itself to the switch, including information hardware revision, firmware version, software version, serial number, manufacturer name, model name, and asset ID TLV.
- Location TLV—Provides location information from the switch to the endpoint device. The location TLV can send the following information:
  - Civic location information—Provides the civic address information and postal information. Examples of civic location information are street address, road name, and postal community name information.
  - ELIN location information—Provides the location information of a caller. The location is determined by the Emergency location identifier number (ELIN), a phone number that routes an emergency call to the local public safety answering point (PSAP). The PSAP can call back the emergency caller using the same number.

Benefits of LLDP

- Follows IEEE 802.1ab standard.
- Enables interoperability among multivendor devices.
- Facilitates troubleshooting of enterprise networks and uses standard network management tools.

- Provides extension for applications such as VoIP.

How to Configure Link Layer Discovery Protocol in Multivendor Networks

Enabling and Disabling LLDP Globally

LLDP is disabled globally by default. This section describes the tasks for enabling and disabling LLDP globally.

Enabling LLDP Globally

Procedure

	Command or Action	Purpose
Step 1	**enable** **Example:** `Device> enable`	Enables privileged EXEC mode. • Enter your password if prompted.
Step 2	**configure terminal** **Example:** `Device# configure terminal`	Enters global configuration mode.
Step 3	**lldp** {**hold time** *seconds* | **reinit** *delay* | **run** | **timer** *rate* | **tlv-select** *tlv*} **Example:** `Device(config)# lldp run`	Enables LLDP globally.
Step 4	**end** **Example:** `Device(config)# end`	Returns to privileged EXEC mode.

Disabling LLDP Globally

Procedure

Step 1 **enable**

Example:

```
Device> enable
```

Enables privileged EXEC mode.

- Enter your password if prompted.

Step 2 **configure terminal**

Example:

```
Device# configure terminal
```

Enters global configuration mode.

Step 3 **no lldp**{**hold time** *seconds* | **reinit** *delay* | **run** | **timer** *rate* | **tlv-select** *tlv*}

Example:

```
Device(config)# no lldp run
```

Disables LLDP globally.

Step 4 **end**

Example:

```
Device(config)# end
```

Returns to privileged EXEC mode.

Disabling and Enabling LLDP on a Supported Interface

LLDP is enabled by default on all supported interfaces. This section describes the tasks for disabling and enabling LLDP on a supported interface.

Disabling LLDP on a Supported Interface

Procedure

	Command or Action	Purpose
Step 1	**enable** **Example:** `Device> enable`	Enables privileged EXEC mode. • Enter your password if prompted.
Step 2	**configure terminal** **Example:** `Device# configure terminal`	Enters global configuration mode.

	Command or Action	Purpose
Step 3	**interface** *type number* **Example:** `Device(config)# interface ethernet 0/1`	Specifies the interface type and number and enters interface configuration mode.
Step 4	**no lldp** {**tlv-select** *tlv* | **receive** | **transmit**} **Example:** `Device(config-if)# no lldp receive`	Disables an LLDP TLV or LLDP packet reception on a supported interface.
Step 5	**end** **Example:** `Device(config-if)# end`	Returns to privileged EXEC mode.

Enabling LLDP on a Supported Interface

LLDP information can be transmitted and received only on an interface where LLDP is configured and enabled. Perform this task to enable LLDP.

Procedure

Step 1 **enable**

Example:

```
Device> enable
```

Enables privileged EXEC mode.

- Enter your password if prompted.

Step 2 **configure terminal**

Example:

```
Device# configure terminal
```

Enters global configuration mode.

Step 3 **interface** *type number*

Example:

```
Device(config)# interface ethernet 0/1
```

Specifies the interface type and number and enters interface configuration mode.

Step 4 **lldp** {**tlv-select** *tlv* | **receive** | **transmit**}

Example:

```
Device(config-if)# lldp transmit
```

Enables an LLDP TLV or LLDP packet transmission on a supported interface.

Step 5 **end**

Example:

```
Device(config-if)# end
```

Returns to privileged EXEC mode.

Setting LLDP Packet Hold Time

Hold time is the duration that a receiving device should maintain LLDP neighbor information before aging it. Perform this task to define a hold time for an LLDP-enabled device.

Procedure

Step 1 **enable**

Example:

```
Device> enable
```

Enables privileged EXEC mode.

- Enter your password if prompted.

Step 2 **configure terminal**

Example:

```
Device# configure terminal
```

Enters global configuration mode.

Step 3 **lldp holdtime** *seconds*

Example:

```
Device(config)# lldp holdtime 100
```

Specifies the hold time.

Step 4 **end**

Example:

```
Device(config)# end
```

Returns to privileged EXEC mode.

Setting LLDP Packet Frequency

Perform this task to specify an interval at which the Cisco software sends LLDP updates to neighboring devices.

Procedure

Step 1 **enable**

Example:

```
Device> enable
```

Enables privileged EXEC mode.

- Enter your password if prompted.

Step 2 **configure terminal**

Example:

```
Device# configure terminal
```

Enters global configuration mode.

Step 3 **lldp timer** *rate*

Example:

```
Device(config)# lldp timer 75
```

Specifies the rate at which LLDP packets are sent every second.

Step 4 **end**

Example:

```
Device(config)# end
```

Returns to privileged EXEC mode.

Monitoring and Maintaining LLDP in Multivendor Networks

Perform this task to monitor and maintain LLDP in multivendor networks. This task is optional, and Steps 2 and 3 can be performed in any sequence.

Procedure

Step 1 **enable**

Example:

```
Device> enable
```

Enables privileged EXEC mode.

- Enter your password if prompted.

Step 2 **show lldp** [**entry** {***** | *word*} | **errors** | **interface** [**ethernet** *number*]| **neighbors** [**ethernet** *number*| **detail**]| **traffic**]

Example:

```
Device# show lldp entry *
```

Displays summarized and detailed LLDP information.

Note When the **show lldp neighbors** command is issued, if the device ID has more than 20 characters, the ID is truncated to 20 characters in command output because of display constraints.

Step 3 **clear lldp** {**counters** | **table**}

Example:

```
Device# clear lldp counters
```

Resets LLDP traffic counters and tables to zero.

Step 4 **end**

Example:

```
Device# end
```

Returns to user EXEC mode.

Enabling and Disabling LLDP TLVs

LLDP TLV support is enabled by default if LLDP is enabled globally and locally on a supported interface. Specific TLVs, however, can be enabled and suppressed.

Enabling LLDP TLVs

Procedure

Step 1 **enable**

Example:

```
Device> enable
```

Enables privileged EXEC mode.

- Enter your password if prompted.

Step 2 **configure terminal**

Example:

```
Device# configure terminal
```

Enters global configuration mode.

Step 3 **interface** *type number*

Example:

```
Device(config)# interface ethernet 0/1
```

Specifies the interface type and number on which to enable LLDP and enters interface configuration mode.

Step 4 **lldp** {**tlv-select** *tlv* | **receive** | **transmit**}

Example:

```
Device(config-if)# lldp transmit
```

Enables an LLDP TLV or LLDP packet transmission on a supported interface.

Step 5 **lldp tlv-select** *tlv*

Example:

```
Device(config-if)# lldp tlv-select system-description
```

Enables a specific LLDP TLV on a supported interface.

Step 6 **end**

Example:

```
Device(config-if)# end
```

Returns to privileged EXEC mode.

Disabling LLDP TLVs

Procedure

Step 1 **enable**

Example:

```
Device> enable
```

Enables privileged EXEC mode.

- Enter your password if prompted.

Step 2 **configure terminal**

Example:

```
Device# configure terminal
```

Enters global configuration mode.

Step 3 **interface** *type* *number*

Example:

```
Device(config)# interface ethernet 0/1
```

Specifies the interface type and number on which to disable LLDP and enters interface configuration mode.

Step 4 **no lldp** {**tlv-select** *tlv* | **receive** | **transmit**}

Example:

```
Device(config-if)# no lldp receive
```

Disables an LLDP TLV or LLDP packet reception on a supported interface.

Step 5 **no lldp tlv-select** *tlv*

Example:

```
Device(config-if)# no lldp tlv-select system-description
```

Disables a specific LLDP TLV on a supported interface.

Step 6 **end**

Example:

```
Device(config-if)# end
```

Returns to privileged EXEC mode.

Configuration Examples for Link Layer Discovery Protocol in Multivendor Networks

Example: Configuring Voice VLAN

The following example shows how to configure voice VLAN and verify

```
Device1> enable
Device1# configure terminal
Device1(config)# interface GigabitEthernet0/1/7
Device1(config-if)# switchport voice vlan 10
Device1(config-if)# no ip address
Device1(config-if)# end
```

The following example displays the updated running configuration on Device 2. LLDP is enabled with hold time, timer, and TLV options configured.

```
Device1# show lldp neighbors detail

Local Intf: Gi0/1/7
Chassis id: 10.10.0.1
Port id: C8F9F9D61BC2:P1
Port Description: SW PORT
System Name: SEPC8F9F9D61BC2

System Description:
Cisco IP Phone 7962G,V12, SCCP42.9-3-1ES27S

Time remaining: 127 seconds
System Capabilities: B,T
Enabled Capabilities: B,T
Management Addresses:
    IP: 10.10.0.1
Auto Negotiation - supported, enabled
Physical media capabilities:
    1000baseT(HD)
    1000baseX(FD)
    Symm, Asym Pause(FD)
    Symm Pause(FD)
Media Attachment Unit type: 16
Vlan ID: - not advertised

MED Information:

    MED Codes:
          (NP) Network Policy, (LI) Location Identification
          (PS) Power Source Entity, (PD) Power Device
          (IN) Inventory

    H/W revision: 12
    F/W revision: tnp62.8-3-1-21a.bin
    S/W revision: SCCP42.9-3-1ES27S
    Serial number: FCH1610A5S5
    Manufacturer: Cisco Systems, Inc.
    Model: CP-7962G
    Capabilities: NP, PD, IN
    Device type: Endpoint Class III
    Network Policy(Voice): VLAN 10, tagged, Layer-2 priority: 5, DSCP: 46
    Network Policy(Voice Signal): VLAN 10, tagged, Layer-2 priority: 4, DSCP: 32
    PD device, Power source: Unknown, Power Priority: Unknown, Wattage: 6.3
    Location - not advertised
```

The following example shows how to configure LLDP timer, hold time, and TLVs options on Device 2.

```
Device> enable
Device# configure terminal
Enter configuration commands, one per line.  End with CNTL/Z.
Device(config)# lldp run
Device(config)# lldp holdtime 150
Device(config)# lldp timer 15
Device(config)# lldp tlv-select port-vlan
Device(config)# lldp tlv-select mac-phy-cfg
Device2(config)# interface ethernet 0/0
Device2(config-if)# lldp transmit
Device2(config-if)# end
00:08:32: %SYS-5-CONFIG_I: Configured from console by console
```

The following example shows that voice vlan has been configured on the IP phone.

```
Device1# show lldp traffic
LLDP traffic statistics:
```

```
    Total frames out: 20
    Total entries aged: 0
    Total frames in: 15
    Total frames received in error: 0
    Total frames discarded: 0
    Total TLVs unrecognized: 0
Device1# show lldp neighbors
Capability codes:
    (R) Router, (B) Bridge, (T) Telephone, (C) DOCSIS Cable Device
    (W) WLAN Access Point, (P) Repeater, (S) Station, (O) Other
Device ID           Local Intf     Hold-time  Capability      Port ID
Device2             Et0/0          150        R               Et0/0
Total entries displayed: 1
Device2# show lldp traffic
LLDP traffic statistics:
    Total frames out: 15
    Total entries aged: 0
    Total frames in: 17
    Total frames received in error: 0
    Total frames discarded: 2
    Total TLVs unrecognized: 0
Device2# show lldp neighbors
Capability codes:
    (R) Router, (B) Bridge, (T) Telephone, (C) DOCSIS Cable Device
    (W) WLAN Access Point, (P) Repeater, (S) Station, (O) Other
Device ID           Local Intf     Hold-time  Capability      Port ID
Device1             Et0/0          150        R               Et0/0
Total entries displayed: 1
```

Tagged Packets Using Link Layer Discovery Protocol in Multivendor Networks

Table 7: Feature History

Feature Name	Release Information	Description
Tagged Packet Support Using Link Layer Discovery Protocol (LLDP)	Cisco IOS XE Dublin 17.10.1	LLDP now supports tagged packet transmission over a service instance with dot1q encapsulation. LLDP advertises information about themselves to their network neighbors, and store the information they discover from other devices. Though both these transmitted frames go through the same physical interface, they can be uniquely identified by the information advertised in the Port ID Type-Length-Value (TLV). You can use the lldp enable command to enable LLDP over a particular service instance. Use the **show lldp neighbors** and **show lldp entry** command outputs for neighboring device details. This feature is supported on both Cisco RSP2 and RSP3 modules.

LLDP packets are untagged, and they don't contain 802.1Q header information with VLAN identifier and priority tagging. Starting with Cisco IOS XE Dublin 17.10.1 release, LLDP packet transmission now supports tagged packets over a service instance with dot1q encapsulation. LLDP considers the interface and service instance as an individual entity and transmits the LLDP frames individually. A VLAN tag is added to the Ethernet LLDP frame, based on the encapsulation type of the service instance and sent via Ethernet interface.

An Ethernet flow point (EFP) service instance is a logical interface that connects a bridge domain to a physical port or to an Ether Channel. The neighbor discovery happens over a service instance with encapsulation type as dot1q, to advertise their identity, interconnections, and capabilities.

The **lldp enable** command supports LLDP frames traffic over a service instance. Use this command per service instance, and whenever there is a requirement to run LLDP over a service instance.

The existing commands, **lldp run** and **l2protocol peer lldp** under service instance, must be configured to initiate the LLDP process, along with **lldp enable** command to enable LLDP over a particular service instance.

Limitations and Restrictions

- Starting with Cisco IOS XE Dublin 17.10.1, LLDP supports tagged packets. Also, LLDP is still supported over untagged encapsulated service instance.

- The encapsulation untagged packets work, even without **lldp enable** command.
- For LLDP to receive packets, ensure to enable **l2protocol peer lldp** command with **lldp enable** command.

Configuration Example of LLDP in Service Instance

Example Enabling LLDP

The following example shows, how to enable LLDP in a service instance on tagged packets.

```
Router#configure terminal
Router(config)#lldp run
Router(config)#interface TenGigabitEthernet0/2/0
Router(config-if)#service instance 20 ethernet
Router(config-if-srv)#encapsulation dot1q 20
Router(config-if-srv)#l2protocol peer lldp
Router(config-if-srv)#lldp enable
Router(config-if-srv)#bridge-domain 20
Router(config-if-srv)#exit
```

Example Disabling LLDP

The following example shows, how to disable LLDP in a service instance on tagged packets.

```
Router#configure terminal
Router(config)#interface TenGigabitEthernet0/2/0
Router(config-if)#service instance 20 ethernet
Router(config-if-srv)#encapsulation dot1q 20
Router(config-if-srv)#no l2protocol peer lldp
Router(config-if-srv)#no lldp enable
Router(config-if-srv)#bridge-domain 20
Router(config-if-srv)#exit
```

Example Verifying LLDP

The following example shows the global LLDP details.

```
Router#show lldp
Global LLDP Information:
    Status: ACTIVE
    LLDP advertisements are sent every 30 seconds
    LLDP hold time advertised is 120 seconds
    LLDP interface reinitialisation delay is 2 seconds

Router#show lldp neighbor
Capability codes:
    (R) Router, (B) Bridge, (T) Telephone, (C) DOCSIS Cable Device
    (W) WLAN Access Point, (P) Repeater, (S) Station, (O) Other

Device ID           Local Intf     Hold-time  Capability      Port ID
CE1                 Te0/2/6        120        R               Te0/0/12
CE1                 Te0/2/1        120        R               Te0/0/15
CE1                 Te0/2/0        120        R               Te0/0/14
CE1                 Te0/2/0:2001   120        R               Te0/0/14.2001
CE1                 Te0/2/0:30     120        R               Te0/0/14.30
CE1                 Te0/2/0:2000   120        R               Te0/0/14.2000
CE1                 Te0/2/0:20     120        R               Te0/0/14.20 ------> lldp
neighbor learnt via service instance,
```

```
Port ID with service instance details
PE2                 Te0/2/3:20     120        R               Te0/8/3.20
PE2                 Te0/2/3:30     120        R               Te0/8/3.30
PE2                 Te0/2/3:1000   120        R               Te0/8/3.1000
PE2                 Te0/2/2        200        R               Te0/4/2
PE2                 Te0/2/5        120        R               Te0/8/5
PE2                 Te0/2/4        120        R               Te0/8/4
PE2                 Te0/2/3        120        R               Te0/8/3

Total entries displayed: 14

Router#show lldp interface TenGigabitEthernet0/2/0
TenGigabitEthernet0/2/0:
    Tx: enabled
    Rx: enabled
    Tx state: IDLE
    Rx state: WAIT FOR FRAME
    Enabled EFP: 2000 2001 20 30  ------> Displays the list of EFP's where lldp is enabled

Router#show lldp interface TenGigabitEthernet0/2/0 service-instance 20
TenGigabitEthernet0/2/0:
Service instance: 20 ------> Displays service instance details that is fetched
    Tx: enabled
    Rx: enabled
    Tx state: IDLE
    Rx state: WAIT FOR FRAME
```

Additional References for Using Link Layer Discovery Protocol in Multivendor Networks

Related Documents

Related Topic	Document Title
Cisco IOS commands: master list of commands with complete command syntax, command mode, command history, defaults, usage guidelines, and examples	*Cisco IOS Master Command List, All Releases*
Carrier Ethernet commands: complete command syntax, command mode, command history, defaults, usage guidelines, and examples	*Cisco IOS Carrier Ethernet Command Reference*
LLDP	*Link Layer Discovery Protocol*
Per port location configurations	*Per Port Location Configuration*

Standards and RFCs

Standards/RFCs	Title
IEEE 802.1ab	*Station and Media Access Control Connectivity Discovery*
RFC 2922	*Physical Topology MIB*

MIBs

MIB	MIBs Link
PTOPO MIB	To locate and download MIBs for selected platforms, Cisco software releases, and feature sets, use Cisco MIB Locator found at the following URL: http://www.cisco.com/go/mibs

Technical Assistance

Description	Link
The Cisco Support and Documentation website provides online resources to download documentation, software, and tools. Use these resources to install and configure the software and to troubleshoot and resolve technical issues with Cisco products and technologies. Access to most tools on the Cisco Support and Documentation website requires a Cisco.com user ID and password.	http://www.cisco.com/cisco/web/support/index.html

CHAPTER 11

Configuring Switched Port Analyzer

A local Switched Port Analyzer (SPAN) session is an association of a destination interface with a set of source interfaces. Local SPAN sessions allow you to monitor traffic on one or more interfaces and to send either ingress traffic, egress traffic, or both to one destination interface.

RSPAN allows remote monitoring of traffic where the source and destination switches are connected by L2VPN networks. The RSPAN source is either ports or VLANs as in a traditional RSPAN. However, the SPAN source and destination devices are connected through an L2 pseudowire associated with the RSPAN VLAN over an MPLS/IP network.

This document describes how to configure local Switched Port Analyzer (SPAN), remote SPAN (RSPAN) and RSPAN over VPLS Network on the Cisco router.

Prerequisites for Configuring Local SPAN and RSPAN

Local SPAN

- Use a network analyzer to monitor interfaces.

RSPAN

- Before configuring RSPAN sessions, you must first configure:
  1. Source interface
  2. Destination Bridge Domain over VPLS

Restrictions for Local Span and RSPAN

Local Span

- Local SPAN is only supported on physical ports.
- SPAN monitoring of port-channel interfaces or port-channel member-links is *not* supported.
- Combined Egress local SPAN bandwidth supported on Cisco ASR 900 Series RSP2 module is 1 GB.
- Local SPAN is not supported on logical interfaces such as Vlans or EFPs.
- Up to 14 active local SPAN sessions (ingress and egress) are supported. The router supports up to 14 ingress sessions and up to 12 egress sessions.
- Only one local SPAN destination interface is supported. You *cannot* configure a local SPAN destination interface to receive ingress traffic.
- Outgoing Cisco Discovery Protocol (CDP), Bridge Protocol Data Unit (BPDU), IS-IS, and OSPF packets are not replicated.
- When enabled, local SPAN uses any previously entered configuration.
- When you specify source interfaces and do not specify a traffic direction (**Tx**, **Rx**, or **both**), **both** is used by default.
- The SPAN port does not work for Rx traffic on the pseudowire for interfaces, when the SPAN port is in different ASIC of the RSP2 module.
- Local SPAN destinations never participate in any spanning tree instance. Local SPAN includes BPDUs in the monitored traffic, so any BPDUs seen on the local SPAN destination are from the local SPAN source.
- Local SPAN sessions with overlapping sets of local SPAN source interfaces or VLANs are *not* supported.
- Configuring SPAN and netflow on the same interface is not supported. If SPAN and netflow have been mistakenly configured on the same interface, reset the interface. Use the **default interface** command to set the interface back to its default values, and then configure SPAN.

  The following code shows how to reset the interface:

  ```
  router(config)#default interface GigabitEthernet0/0/0
  router(config)#interface GigabitEthernet0/0/0
  router(config)#ip address 192.168.16.1 255.255.255.0
  router(config)#negotiation auto
  router(config)#cdp enable
  ```

  For the SPAN configuration, see Configuring Sources and Destinations for Local SPAN, on page 175.

RSP3 module

- Destination port of SPAN session, *cannot* be used for other network data traffic flow.
- Multiple destinations for same SPAN session is *not* supported on the Cisco ASR 900 Series RSP3 module.
- Jumbo sized packets and bad CRC packets are *not* spanned.

- Combined Egress local SPAN bandwidth supported is about 100GB depending on other traffic on the internal recycle interface.
- Port-channel *cannot* be used as the SPAN destination.

RSPAN

- RSPAN Vlan/BD is *not* used for data traffic.
- The maximum number of supported RSPAN sessions are 14.
- Only one source port is supported per RSPAN.
- Source ranges (vlan range or port range) is *not* supported.
- Vlan filtering is not supported.
- If two RSPAN configurations sessions are configured on two RSPAN BDs associated to the same Trunk EFP, the traffic from the first session flows to the second session after it is configured.
- RSPAN destination configuration for Layer2 pseudowire is *not* supported.
- If RSPAN BD is associated with a VPLS pseudowire, the traffic flows through the VPLS pseudowire.
- If RSPAN source and destination are separated by pseudowire, then the RSPAN VLAN details must be updated to both RSPAN source switch and destination switch. The pseudowire should also be dedicated for RSPAN traffic.
- BDI should not be created when that BD is part of RSPAN.
- Monitor session should be created only after RSPAN BD is created.
- Do not have RSPAN bridge domain as part of RSPAN source interface.
- Source and destination ports for a Tx SPAN or RSPAN session should be in the same ASIC. This is applicable to Cisco RSP2 module.

Restrictions for RSPAN over VPLS Network RSP3 module

- Only the physical interface will be used as a source in the RSPAN configuration.
- Port-channel or member links cannot be used at the RSPAN source.
- A maximum of one interface is supported as an RSPAN source.
- The source VLAN is not supported in configuring RSPAN.
- The rspan-destination command is not supported. Instead, use the VPLS configuration on the destination session to forward the packets to the sniffer device.
- The Ethernet Data Plane Loopback (ELB) and RSPAN sessions cannot be configured simultaneously.
- MAC learning must be disabled on the RSPAN bridge domain.
- RSPAN is not supported on the Cisco ASR 900 Series RSP3 module until Cisco IOS XE Release 17.2.1.

  Effective Cisco IOS XE Release 17.3.1, RSPAN over a VPLS network is supported on the Cisco RSP3 module.

Understanding Local SPAN and RSPAN

Information About Local SPAN Session and RSPAN Session

Local SPAN Session

A local Switched Port Analyzer (SPAN) session is an association of a destination interface with a set of source interfaces. You configure local SPAN sessions using parameters that specify the type of network traffic to monitor. Local SPAN sessions allow you to monitor traffic on one or more interfaces and to send either ingress traffic, egress traffic, or both to one destination interface.

Local SPAN sessions do not interfere with the normal operation of the switch. You can enable or disable SPAN sessions with command-line interface (CLI) commands. When enabled, a local SPAN session might become active or inactive based on various events or actions, and this would be indicated by a syslog message. The **show monitor session span** *session number* command displays the operational status of a SPAN session.

A local SPAN session remains inactive after system power-up until the destination interface is operational.

The following configuration guidelines apply when configuring local SPAN:

- When enabled, local SPAN uses any previously entered configuration.
- Use the **no monitor session** *session number* command with no other parameters to clear the local SPAN session number.

Local SPAN Traffic

Network traffic, including multicast, can be monitored using SPAN. Multicast packet monitoring is enabled by default. In some SPAN configurations, multiple copies of the same source packet are sent to the SPAN destination interface. For example, a bidirectional (both ingress and egress) SPAN session is configured for sources a1 and a2 to a destination interface d1. If a packet enters the switch through a1 and gets switched to a2, both incoming and outgoing packets are sent to destination interface d1; both packets would be the same (unless a Layer-3 rewrite had occurred, in which case the packets would be different).

RSPAN Session

An RSPAN source session is an association of source ports or VLAN across your network with an RSPAN Vlan. The RSPAN VLAN/BD on the router is the destination RSPAN session.

RSPAN Traffic for RSP2 Module

RSPAN supports source ports and source VLANs in the source switch and destination as RSPAN VLAN/BD.

The figure below shows the original traffic from the Host A to Host B via the source ports or VLANs on Host A. The source ports or VLANs of Host A is mirrored to Host B using RSPAN VLAN 10. The traffic for each RSPAN session is carried over a user-specified RSPAN VLAN that is dedicated for that RSPAN session in all participating devices. The traffic from the source ports or VLANs are mirrored into the RSPAN VLAN

and forwarded over Trunk or the EVC bridge domain (BD) ports carrying the RSPAN VLAN to a destination session monitoring the RSPAN VLAN.

Each RSPAN source must have either ports or VLANs as RSPAN sources. On RSPAN destination, the RSPAN VLAN is monitored and mirrored to the destination physical port connected to the sniffer device.

Figure 6: RSPAN Traffic

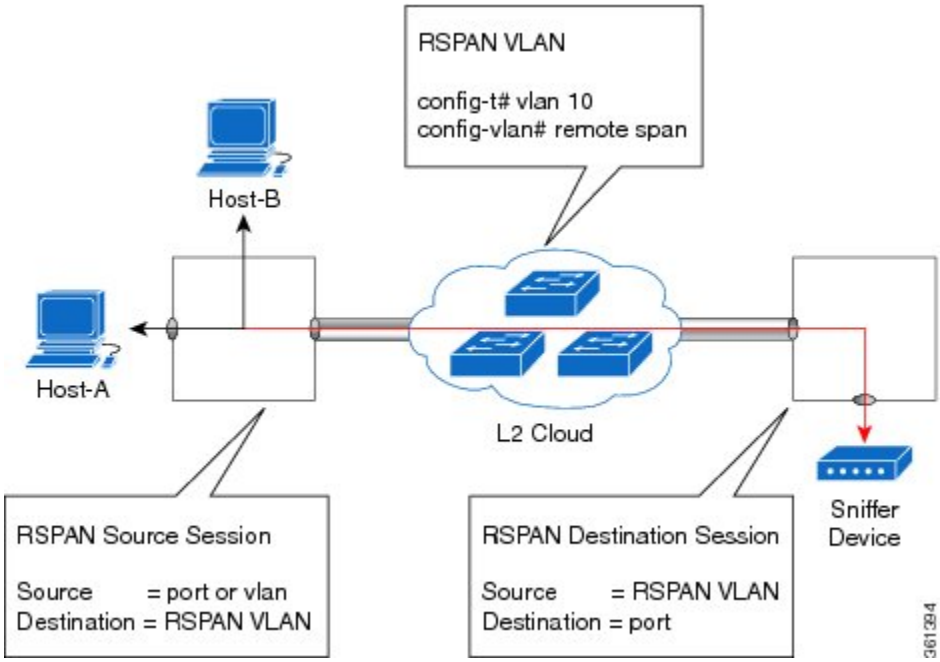

RSPAN allows remote monitoring of traffic where the source and destination switches are connected by L2VPN networks

The RSPAN source is either ports or VLANs as in a traditional RSPAN. However, the SPAN source and destination devices are connected through a L2 pseudowire associated with the RSPAN VLAN over an MPLS/IP network. The L2 pseudowire is dedicated for only RSPAN traffic. The mirrored traffic from the source port or VLAN is carried over the pseudowire associated with the RSPAN VLAN towards the destination side. On the destination side, a port belonging to the RSPAN VLAN or EVC BD is connected to sniffer device.

Destination Interface

A destination interface, also called a monitor interface, is a switched interface to which SPAN or RSPAN sends packets for analysis. You can have only one destination interface for SPAN sessions.

An interface configured as a destination interface cannot be configured as a source interface. Specifying a trunk interface as a SPAN or RSPAN destination interface stops trunking on the interface.

Source Interface

A source interface is an interface monitored for network traffic analysis. An interface configured as a destination interface cannot be configured as a source interface.

Traffic Directions

Ingress SPAN (Rx) copies network traffic received by the source interfaces for analysis at the destination interface. Egress SPAN (Tx) copies network traffic transmitted from the source interfaces to the destination interface. Specifying the configuration option (both) copies network traffic received and transmitted by the source interfaces to the destination interface.

The following table lists the supported traffic types for RSPAN.

Table 8: RSPAN over VPLS Traffic for RSP3 module

Source	Ingress Mirror (Rx)	Egress Mirror (Tx)	Both
CFM	Not Supported	Supported	Not Supported
Layer 2	Supported	Supported	Supported
Layer 3	Incoming Ethernet and VLAN header are stripped off and RSPANed over VPLS	Supported	Not Supported
L2VPN	Not Supported	Supported	Not Supported
L3VPN	Not Supported	Supported	Not Supported
L3VPN over BDI	Not Supported	Supported	Not Supported
MPLS	Incoming Ethernet and VLAN header are stripped off and RSPANed over VPLS	Supported	Not Supported
Routed PW	Not Supported	Supported	Not Supported
VPLS	Not supported for bidirectional traffic	Supported	Not Supported

Table 9: RSPAN Traffic

Source	Ingress Mirror (Rx)	Egress Mirror (Tx)	Both
Layer2 or Layer3	Supported	Supported	Supported
VLAN	Supported	Not supported	Not supported
EFP	Not supported	Not supported	Not supported
Pseudowire	Not supported	Not supported	Not supported

The following table lists the supported **rewrite** traffic for RSPAN on the EFP, Trunk with the associated RSPAN Bridge Domains (BD).

Table 10: Rewrite Traffic for RSPAN BD

Rewrite Operations	Source	EFP/Trunk associated with RSPAN BD
no-rewrite	Pop1, Pop2, Push1	Only Pop1

The following tables lists the format of the spanned packets at the destination port for both Ingress and Egress RSPAN. The tables lists the formats of untagged, single, and double tagged source packets for EFPs under source port configured with **rewrite** operations (no-rewrite, pop1, pop2 and push1).

Table 11: Destination Port Ingress and Egress Spanned Traffic for EVC RSPAN BD

	Ingress Traffic	Egress Traffic
(Untagged Traffic) - Source port rewrite	**RSPAN VLAN (BD) rewrite pop1 tag symmetric**	**RSPAN VLAN (BD) rewrite pop1 tag symmetric**
no-rewrite	RSPAN BD tag + packet	RSPAN BD tag + packet
pop1 tag	NA	NA
pop2 tag	NA	NA
push1 tag	NA	NA
(Single Traffic)-Source port rewrite	**RSPAN VLAN (BD) rewrite pop1 tag symmetric**	**RSPAN VLAN (BD) rewrite pop1 tag symmetric**
no-rewrite	RSPAN BD tag + source-outer-tag + packet	RSPAN BD tag + source-outer-tag + packet
pop1 tag		
pop2 tag		NA
push1 tag		RSPAN BD tag + source-outer-tag + packet
(Double traffic) - Source port rewrite	**RSPAN VLAN (BD) rewrite pop1 tag symmetric**	**RSPAN VLAN (BD) rewrite pop1 tag symmetric**
no-rewrite	RSPAN BD tag + source-outer-tag + source-inner-tag + packet	RSPAN BD tag + Source-inner-tag + packet
pop1 tag		
pop2 tag		
push1 tag		

Table 12: Destination Port Ingress and Egress Spanned Traffic for TEFP RSPAN BD

	Ingress Traffic	Egress Traffic
(Untagged traffic)- Source port rewrite	**RSPAN VLAN (BD) rewrite pop1 tag symmetric**	**RSPAN VLAN (BD) rewrite pop1 tag symmetric**
no-rewrite	RSPAN BD tag + packet	RSPAN BD tag + packet
pop1 tag	NA	NA
pop2 tag	NA	NA

	Ingress Traffic	Egress Traffic
push1 tag	NA	NA
(Single traffic)-Source port rewrite	**RSPAN VLAN (BD) rewrite pop1 tag symmetric**	**RSPAN VLAN (BD) rewrite pop1 tag symmetric**
no-rewrite	RSPAN BD tag + source-outertag + packet	RSPAN BD tag + source-outertag + packet
pop1 tag		
pop2 tag		NA
push1 tag		RSPAN BD tag + source-outertag + packet
(Double traffic) -Source port rewrite	**RSPAN VLAN (BD) rewrite pop1 tag symmetric**	**RSPAN VLAN (BD) rewrite pop1 tag symmetric**
no-rewrite	RSPAN BD tag + source-outertag + source-innertag+ packet	RSPAN BD tag + source-outertag + source-innertag + packet
pop1 tag		
pop2 tag		
push1 tag		

Table 13: Destination Port Ingress and Egress Spanned Traffic for RSPAN BD with VPLS Pseudowire (RSP2 module)

	Ingress Traffic	Egress Traffic
(Untagged traffic) - Source port rewrite	**RSPAN VLAN (BD) rewrite pop1 tag symmetric**	**RSPAN VLAN (BD) rewrite pop1 tag symmetric**
no-rewrite	RSPAN BD tag + packet	RSPAN BD tag + packet
pop1 tag	NA	NA
pop2 tag	NA	NA
push1 tag	NA	NA
(Single traffic)- Source port rewrite	**RSPAN VLAN (BD) rewrite pop1 tag symmetric**	**RSPAN VLAN (BD) rewrite pop1 tag symmetric**
no-rewrite	RSPAN BD tag + source-outer-tag + packet	RSPAN BD tag + source-outer-tag + packet
pop1 tag		
pop2 tag	NA	NA
push1 tag	RSPAN BD tag + source-outer-tag + packet	RSPAN BD tag + source-outer-tag + packet

	Ingress Traffic	Egress Traffic
(Double traffic)-Source port rewrite	**RSPAN VLAN (BD) rewrite pop1 tag symmetric**	**RSPAN VLAN (BD) rewrite pop1 tag symmetric**
no-rewrite	RSPAN BD tag + source-outer-tag + source-inner-tag + packet	RSPAN BD tag + source-outer-tag + source-inner-tag + packet
pop1 tag		
pop2 tag		
push1 tag		

Configuring Local SPAN and RSPAN

Configuring Sources and Destinations for Local SPAN

To configure sources and destinations for a SPAN session:

Procedure

Step 1 **configure terminal**

Example:

```
Router# configure terminal
```

Enters global configuration mode.

Step 2 **monitor session {***session_number***} type local**

Example:

```
Router(config)# monitor session 1 type local
```

Specifies the local SPAN session number and enters the local monitoring configuration mode.

- *session_number*—Indicates the monitor session. The valid range is 1 through 14.

Step 3 **source interface** *interface_type slot/subslot/port* **[, | - | rx | tx | both]**

Example:

```
Router(config-mon-local)# source interface gigabitethernet 0/2/1 rx
```

Specifies the source interface and the traffic direction:

- *interface_type*—Specifies the Gigabit Ethernet or Ten Gigabit Ethernet interface.
  - *slot/subslot/port*—The location of the interface.
- “,”—List of interfaces
- “–”—Range of interfaces

- rx—Ingress local SPAN
- tx—Egress local SPAN
- both

Step 4 **destination interface** *interface_type slot/subslot/port* **[, | -]**

Example:

```
Router(config-mon-local)# destination interface gigabitethernet 0/2/4
```

Specifies the destination interface that sends both ingress and egress local spanned traffic from source port to the prober or sniffer.

- *interface_type*—Specifies the Gigabit Ethernet or Ten Gigabit Ethernet interface.
  - *slot/subslot/port*—The location of the interface.
- “,”—List of interfaces
- “–”—Range of interfaces

Step 5 **no shutdown**

Example:

```
Router(config-mon-local)# no shutdown
```

Enables the local SPAN session.

Step 6 **End**

Removing Sources or Destinations from a Local SPAN Session

To remove sources or destinations from a local SPAN session, use the following commands beginning in EXEC mode:

Procedure

Step 1 **enable**

Example:

```
Router> enable
```

Enables privileged EXEC mode.

- Enter your password if prompted.

Step 2 **configure terminal**

Example:

```
Router# configure terminal
```

Enters global configuration mode.

Step 3 **no monitor session** *session-number*

Example:

```
Router(config)# no monitor session 2
```

Clears existing SPAN configuration for a session.

Configuring RSPAN Source Session

To configure the source for a RSPAN session:

Procedure

Step 1 **enable**

Example:

```
Router> enable
```

Enables privileged EXEC mode.

- Enter your password if prompted.

Step 2 **configure terminal**

Example:

```
Router# configure terminal
```

Enters global configuration mode.

Step 3 **monitor session** *RSPAN_source_session_number* **type rspan-source**

Example:

```
Router(config)# monitor session 1
 type rspan-source
```

Configures an RSPAN source session number and enters RSPAN source session configuration mode for the session.

- *RSPAN_source_session_number*—

  Valid sessions are 1 to 14.
- **rspan-source**—Enters the RSPAN source-session configuration mode.

Step 4 **Filter vlan***vlan id*

Example:

```
filter vlan 100
```

Applies the VLAN access map to the VLAN ID; valid values are from 1 to 4094.

Step 5 **source** {*single_interface* slot/subslot/port| *single_vlan* [**rx** | **tx** | **both**]

Example:

```
Router(config-mon-rspan-src)# source interface gigabitethernet 0/2/1 tx
```

Specifies the RSPAN session number, the source interfaces and the traffic direction to be monitored.

- *single_interface*—Specifies the Gigabit Ethernet or Ten Gigabit Ethernet interface.
  - *slot/subslot/port*—The location of the interface.
- *single_vlan*

  —Specifies the single VLAN.
- **both**

  —(Optional) Monitors the received and the transmitted traffic.
- **rx**

  —(Optional) Monitors the received traffic only.
- **tx**—(Optional) Monitors the transmitted traffic only.

Step 6 **destination remote vlan** *rspan_vlan_ID*

Example:

```
Router(config-mon-rspan-src)# destination remote vlan2
```

Associates the RSPAN source session number session number with the RSPAN VLAN.

- *rspan_vlan_ID*—Specifies the Vlan ID.

  Note *rspan_vlan_ID* is the RSPAN BD that is configured under the EFP or port which carries the RSPANd traffic.

Step 7 **no shutdown**

Example:

```
Router(config-mon-rspan-src)# no shutdown
```

Enables RSPAN source.

Step 8 **end**

Example:

```
Router(config-mon-rspan-src)# end
```

Exists the configuration.

Configuring RSPAN Destination Session

To configure the destination for a RSPAN session for remote Vlan:

Procedure

Step 1 **enable**

Example:

```
Router> enable
```

Enables privileged EXEC mode.

- Enter your password if prompted.

Step 2 **configure terminal**

Example:

```
Router# configure terminal
```

Enters global configuration mode.

Step 3 **monitor session** *RSPAN_destination_session_number* **type rspan-destination**

Example:

```
Router(config)# monitor session 1 type rspan-destination
```

Configures a RPAN session.

- *RSPAN_destination_session_number*—Valid sessions are 1 to 80.
- **rspan-destination**—Enters the RSPAN destination-session configuration mode.

Step 4 **source remote vlan** *rspan_vlan_ID*

Example:

```
Router(config-mon-rspan-dst)# source remote vlan2
```

Associates the RSPAN destination session number RSPAN VLAN.

- *rspan_vlan_ID*—Specifies the Vlan ID

Step 5 **destination** {*single_interface slot/subslot/port}*

Example:

```
Router(config-mon-rspan-dst)# destination interface gigabitethernet 0/0/1
```

Associates the RSPAN destination session number with the destination port.

- *single_interface* —Specifies the Gigabit Ethernet or Ten Gigabit Ethernet interface.
  - *slot/subslot/port*—The location of the interface.

Step 6 **no shutdown**

Example:

```
Router(config-mon-rspan-dst)# no shutdown
```

Restarts the interface

Step 7 **end**

Example:

```
Router(config-mon-rspan-dst)# end
```

Exists the configuration

Removing Sources or Destinations from a RSPAN Session

To remove source or destination from a RSPAN session, delete and recreate the RSPAN session. The following are the steps:

Procedure

Step 1 **enable**

Example:

```
Router> enable
```

Enables privileged EXEC mode.

- Enter your password if prompted.

Step 2 **configure terminal**

Example:

```
Router# configure terminal
```

Enters global configuration mode.

Step 3 **no monitor session** *session number*

Example:

```
Router(config)# no monitor session 1
```

Exits monitor session.

Step 4 **end**

Example:

```
Router(config-mon-rspan-src)# end
```

Exits configuration mode.

Sample Configurations

The following sections contain configuration examples for SPAN and RSPAN.

Configuration Example: Local SPAN

The following example shows how to configure local SPAN session 8 to monitor bidirectional traffic from source interface Gigabit Ethernet interface to destination:

```
Router(config)# monitor session 8 type local
Router(config)# source interface gigabitethernet 0/0/10
Router(config)# destination interface gigabitethernet 0/0/3
Router(config)# no shut
```

Configuration Example: Removing Sources or Destinations from a Local SPAN Session

This following example shows how to remove a local SPAN session:

```
Router(config)# no monitor session 8
```

Configuration Example: RSPAN Source

The following example shows how RSPAN session 2 to monitor bidirectional traffic from source interface Gigabit Ethernet 0/0/1:

```
Router(config)# monitor session 2 type RSPAN-source
Router(config-mon-RSPAN-src)# source interface gigabitEthernet0/0/1 [tx |rx|both]
Router(config-mon-RSPAN-src)# destination remote VLAN 100
Router(config-mon-RSPAN-src)# no shutdown
Router(config-mon-RSPAN-src)# end
```

The following example shows how RSPAN session 3 to monitor bidirectional traffic from source Vlan 200:

```
Router(config)# monitor session 3 type RSPAN-source
Router(config-mon-RSPAN-src)# filter vlan 100
Router(config-mon-RSPAN-src)# source interface Te0/0/23 rx
Router(config-mon-RSPAN-src)# destination remote VLAN 200
Router(config-mon-RSPAN-src)# no shutdown
Router(config-mon-RSPAN-src)# end
```

Configuration Example: RSPAN Destination

The following example shows how to configure interface Gigabit Ethernet 0/0/1 as the destination for RSPAN session 2:

```
Router(config)# monitor session 2 type RSPAN-destination
Router(config-mon-RSPAN-dst)# source remote VLAN 100
Router(config-mon-RSPAN-dst)# destination interface gigabitEthernet 0/0/1
Router(config-mon-RSPAN-dst)# end
```

Verifying Local SPAN and RSPAN

Use the **show monitor session** command to view the sessions configured.

- The following example shows the Local SPAN source session with Tx as source:

```
Router# show monitor session 8
Session 8
---------
Type : Local Session
Status : Admin Enabled
Source Ports :
TX Only : Gi0/0/10
Destination Ports : Gi0/0/3
MTU : 1464
Dest RSPAN VLAN : 100
```

- The following example shows the RSPAN source session with Gigabit Ethernet interface 0/0/1 as source:

```
Router# show monitor session 2
Session 2
---------
Type                  : Remote Source Session
Status                : Admin Enabled
Source Ports          :
    Both              : Gi0/0/1
MTU                   : 1464
```

- The following example shows the RSPAN source session with Vlan 20 as source:

```
Router# show monitor session 3
Session 3
---------
Type                  : Remote Source Session
Status                : Admin Enabled
Source VLANs          :
    RX Only           : 20
MTU                   : 1464
```

- The following example shows the RSPAN destination session with Gigabit Ethernet interface 0/0/1 as destination:

```
Router# show monitor session 2
Session 2
---------
Type                  : Remote Destination Session
Status                : Admin Enabled
Destination Ports     : Gi0/0/1
MTU                   : 1464
Source RSPAN VLAN : 100
```

CHAPTER 12

Ethernet Virtual Connections Configuration

An Ethernet Virtual Connection (EVC) is defined by the Metro-Ethernet Forum (MEF) as an association between two or more user network interfaces that identifies a point-to-point or multipoint-to-multipoint path within the service provider network. An EVC is a conceptual *service pipe* within the service provider network. A *bridge domain* is a local broadcast domain that is VLAN-ID-agnostic. An Ethernet flow point (EFP) service instance is a logical interface that connects a bridge domain to a physical port or to an EtherChannel group.

An EVC broadcast domain is determined by a bridge domain and the EFPs that are connected to it. You can connect multiple EFPs to the same bridge domain on the same physical interface, and each EFP can have its own matching criteria and rewrite operation. An incoming frame is matched against EFP matching criteria on the interface, learned on the matching EFP, and forwarded to one or more EFPs in the bridge domain. If there are no matching EFPs, the frame is dropped.

You can use EFPs to configure VLAN translation. For example, if there are two EFPs egressing the same interface, each EFP can have a different VLAN rewrite operation, which is more flexible than the traditional switchport VLAN translation model.

This document describes how to configure EVC features.

For detailed information about the commands, see:

- Cisco IOS Carrier Ethernet Command Reference
- Cisco IOS Master Command List

Supported EVC Features

- Service instance—you create, delete, and modify EFP service instances on Ethernet interfaces.
- Encapsulation—you can map traffic to EFPs based on:
  - 802.1Q VLANs (a single VLAN or a list or range of VLANs)

- 802.1Q tunneling (QinQ) VLANs (a single outer VLAN and a list or range of inner VLANs)
- Double-tagged frames mapped to EVC based on C-tags (wildcard S-Tags)

- Bridge domains—you can configure EFPs as members of a bridge domain (up to 64 EFPs per bridge domain for bridge domain with BDIs.).
- Rewrite (VLAN translation)
  - Pop symmetric

    pop 1 removes the outermost tag

    pop 2 removes the two outermost tags

    pop symmetric adds a tag (or 2 tags for **pop 2 symmetric**) on egress for a *push* operation
  - Ingress push—The **rewrite ingress tag push dot1q** *vlan-id* **symmetric** command adds a tag to an ingress packet
  - QinQ with rewrite

rewrite ingress tag push is supported on QoS with CoS Marking for EVCs on RSP2 module.

Note Ingress push on Qos on for EVC is *not* supported on RSP1 module.

Note EVC push is also supported on 802.1ad.

- EVC forwarding
- MAC address learning and aging
- EVCs on EtherChannels
- Hairpinning
- Split horizon
- Layer 2 protocol tunneling and QinQ
- Bridging between EFPs
- MSTP (MST on EVC bridge domain)
- EFP statistics (packets and bytes)
- QoS aware EVC/EFP per service instance
- Static MAC Addresses

These Layer 2 port-based features can run with EVC configured on the port:

- LACP
- CDP

- MSTP
- EVC egress filtering

Limitations

Table 14: Feature History

Feature Name	Release Information	Feature Description
Support for Ethernet Flow Point (EFP) with Untagged Plus VLAN Range or List	Cisco IOS XE Cupertino 17.7.1	This feature supports an EFP service instance with untagged and IEEE 802.1Q encapsulation for a single Ethernet Virtual Circuit (EVC) on the RSP3 module. Prior to this release, a service instance supported only a single encapsulation type.

The following limitations apply when configuring EVC features:

- Configuring the QoS policy-map with extended service instance ids of integers 4001–5000 is not supported on Cisco NCS 4202 router.
- Egress filtering on ASIC results in packets loss for VLAN ranges below 5 and also the comma-separated VLANs are forwarded only with packets having the first VLAN. To avoid packet drops, ensure to configure a VLAN range value greater than 5.
- From Cisco IOS XE Cupertino Release 17.7.1, an EFP service instance with untagged and IEEE 802.1Q encapsulation is supported for a single Ethernet Virtual Circuit (EVC), on the RSP 3 module, with the following limitations:
  - Support for the **rewrite** command is restricted to options, such as **push dot1q** and **dot1ad**.
  - An EFP service instance with untagged and IEEE 802.1QinQ encapsulation isn't supported for a single EVC.
  - The Bridge Domain Interface (BDI) functionality isn't supported on an EFP service instance.
  - Layer 2 CoS marking is supported only with the **rewrite push** command.
  - Egress filtering isn't supported with the **efp_feat_ext** SDM template.
  - SADT isn't supported over EFP with untagged VLAN.
- If a service-instance on an interface has a list of VLAN (less than or equal to 5) and another service-instance on the same interface uses a VLAN, which is already included, then both the service-instances can forward the traffic in the RSP3 module without any issues. But, when you increase the size of VLAN list to more than 5 on the service-instance, then the service on the other service-instances will be affected.
- Translate operations aren't supported.

- You can create a maximum of 8000 EVCs per interface. For more information, see section 16K EFP Support in the Quality of Service Configuration Guidelines, Cisco IOS XE 17 (Cisco ASR 900 Series).
- You can create a maximum of 256 EFPs per bridge-domain.
- A delay of 30-40 ms is observed while adding or removing the VLAN ID on any EFP for existing traffic on the RSP3 module.
- The **no mac address-table learning bridge-domain** *bridge-id* global configuration command isn't currently supported.
- Only dot1q encapsulation is supported on trunk EFPs.
- Priority tagging and encapsulation untagged aren't supported under the same EFP on the RSP3 module.
- BDI statistics is supported on the RSP3 module starting Cisco IOS XE Fuji 16.9.3 Release.
- On the RSP3 module, the Trunk EFP doesn't drop unallowed VLANs, when any other EFP doesn't exist to filter the VLANs. The traffic for those VLANs is bridged across to the corresponding BD, if it exists.
- Ingress mapping of Differentiated Services Code Point (DSCP) or Class of Service (CoS) to the C-CoS or S-CoS is supported.
- Egress classification and queuing is based on DSCP or CoS.
- Ethertype encapsulation and CoS value encapsulation aren't supported on the RSP3 module.
- For layer 2 VPN and VPLS, when one end is configured as "encapsulation default" and other end is configured without any rewrite options, the packets drop and these dropped packets are considered as "Output Drops". This is an expected behavior.

  This behavior is applicable to Cisco RSP2 Module. This behavior isn't seen in Cisco RSP1 and Cisco RSP3 Modules.
- If a Layer3 bridge domain interface (BDI) is associated with a bridge domain, then 64 EFPs are supported on that bridge domain across a single or multiple interfaces on the RSP3 module.
- Remote MEPs aren't learnt when SH group 1 and SH group 2 are configured in the access EVC BD.
- TCAM exhaustion message is displayed even when TEFP with 900 VLAN has a QoS policy that is configured to match a single VLAN. As a result, the TEFP scale is affected.
- Configurable MAC isn't supported on BDIs with multiple EFPs per port. If configured, it may lead to erroneous behaviour.
- The following features aren't supported on BDIs with multiple EFPs:
  - BFD
  - All Layer3 multicast features
  - PTP
  - DHCP snooping
- 1024 EFPs per port are supported, which fall into the category of second or higher EFP configured under any BDI on that port.
- Fast Reroute (FRR) isn't supported on BDI with multiple EFPs.

- By default, ARP throttling isn't supported on RSP3 module as excess entries lead to error objects. You can use the **arp entries interface-limit** command to enable the throttle.

Ethernet Virtual Connections

You use the **ethernet evc** *evc-id* global configuration command to create an Ethernet virtual connection (EVC). The *evc-id* or name is a text string from 1 to 100 bytes. Entering this command puts the device into service configuration mode (config-srv) where you configure all parameters that are common to an EVC.

In this mode you can enter these commands:

- **default**—Sets a command to its defaults
- **exit**—Exits EVC configuration mode
- **no**— Negates a command or sets its defaults
- **oam**—Specifies the OAM Protocol
- **uni**—Configures a count UNI under EVC

Service Instances and EFPs

Configuring a service instance on a Layer 2 port or EtherChannel creates a pseudoport or Ethernet flow point (EFP) on which you configure EVC features. Each service instance has a unique number per interface, but you can use the same number on different interfaces because service instances on different ports are not related.

If you have defined an EVC by entering the **ethernet evc** *evc-id* global configuration command, you can associate the EVC with the service instance (optional). There is no default behavior for a service instance.

Use the **service instance** *number* **ethernet** [*name*] interface configuration command to create an EFP on a Layer 2 interface or EtherChannel and to enter service instance configuration mode. You use service instance configuration mode to configure all management and control date plane attributes and parameters that apply to the service instance on a per-interface basis.

- The **service instance** *number* is the EFP identifier, an integer from 1 to 4000.
- The optional **ethernet** *name* is the name of a previously configured EVC. You do not need to enter an EVC name, but you must enter **ethernet**. Different EFPs can share the same name when they correspond to the same EVC. EFPs are tied to a global EVC through the common name.

When you enter service instance configuration mode, you can configure these options:

- **default**—Sets a command to its defaults
- **description**—Adds a service instance specific description
- **encapsulation**—Configures Ethernet frame match criteria
- **ethernet**—Configures Ethernet-lmi parameters
- **exit**— Exits from service instance configuration mode
- **ip**—Interface Internet Protocol config commands

- **ipv6**—IPv6 interface subcommands
- **l2protocol**—Configures Layer 2 control protocol processing
- **mac**—Commands for MAC address-based features
- **no**—Negates a command or sets its defaults
- **service-policy** —Attaches a policy-map to an EFP
- **shutdown**—Takes the service instance out of service

  Enter the [**no**] **shutdown** service-instance configuration mode to shut down or bring up a service instance.
- **snmp**—Modify SNMP service instance parameters

Encapsulation

Encapsulation defines the matching criteria that maps a VLAN, a range of VLANs, class of service (CoS) bits, Ethertype, or a combination of these to a service instance. You configure encapsulation in service instance configuration mode. You must configure one encapsulation command per EFP (service instance).

Use the **encapsulation** service-instance configuration mode command to set encapsulation criteria. Different types of encapsulations are default, dot1q, dot1ad, priority-tagged and untagged. Supported Ethertypes include ipv4, ipv6, pppoe-all, pppoe-discovery, and pppoe-session.

Encapsulation classification options also include:

- outer tag VLAN
- outer tag CoS
- inner tag VLAN
- inner tag CoS
- payload ethertype

After you have entered an encapsulation method, these keyword options are available in service instance configuration mode:

- **bridge-domain**—Configures a bridge domain
- **rewrite**—Configures Ethernet rewrite criteria

Table 15: Supported Encapsulation Types

	Description
encapsulation dot1q *vlan-id* [*vlan-id*[-*vlan-id*]]	Defines the matching criteria to be used to map 802.1Q frames ingress on an interface appropriate EFP. The options are a single VLAN, a range of VLANs, or lists of VLANs ranges. VLAN IDs are 1 to 4094. • Enter a single VLAN ID for an exact match of the outermost tag. • Enter a VLAN range for a ranged outermost match.

	Description
encapsulation dot1q *vlan-id* **second-dot1q** *vlan-id* [*vlan-id*[-*vlan-id*]]	Double-tagged 802.1Q encapsulation. Matching criteria to be used to map QinQ fra on an interface to the appropriate EFP. The outer tag is unique and the inner tag car VLAN, a range of VLANs or lists of VLANs or VLAN ranges. • Enter a single VLAN ID in each instance for an exact match of the outermost • Enter a VLAN range for **second-dot1q** for an exact outermost tag and a range
encapsulation dot1q {**any** | *vlan-id* [*vlan-id*[-*vlan-id*]]} **ext-etype** *ethertype*	Ethertype encapsulation is the payload encapsulation type after VLAN encapsulatio • ethertype—The ext-etype string can have these values: ipv4, ipv6, pppoe-disc pppoe-session, or pppoe-all. • Matches any or an exact outermost VLAN or VLAN range and a payload ethe
encapsulation dot1q *vlan_id* **cos** *cos_value* **second-dot1q** *vlan-id cos cos_value*	CoS value encapsulation defines match criterion after including the CoS for the S-T C-Tag. The CoS value is a single digit between 1 and 7 for S-Tag and C-Tag. You cannot configure CoS encapsulation with **encapsulation untagged**, but you ca with **encapsulation priority-tag**. The result is an exact outermost VLAN and CoS match and second tag. You can als ranges.
encapsulation dot1q any	**encapsulation**Matches any packet with one or more VLANs.
encapsulation dot1q add **encapsulation dot1q add inner** *vlan range* **encapsulation dot1ad add** **encapsulation dot1ad add inner** *vlan range*	Adds one or more VLAN tag values for matching criteria. This command is also us **run** command when the encapsulation configuration command is more than the ter and **ethernet service multi-line** command is configured or if the encapsulation com than 255 characters.
encapsulation dot1q remove **encapsulation dot1ad remove**	Removes one or more VLAN tag values for matching criteria.
ethernet service multi-line	Permits use of multi-line output based on the screen width. This is applicable to **en dot1q add** command. This is visible only when **show running config** command is e this command is enabled. Values are *on* or *off*
encapsulation untagged	Matching criteria to be used to map untagged (native) Ethernet frames entering an i appropriate EFP. Only one EFP per port can have untagged encapsulation. However, a port that hosts untagged traffic can also host other EFPs that match tagged frames.

	Description
encapsulation default	Configures the default EFP on an interface, acting as a catch-all encapsulation. All pac seen as native. If you enter the **rewrite** command with encapsulation default, the comm rejected. If the default EFP is the only one configured on a port, it matches all ingress frames on If you configure the default EFP on a port, you cannot configure any other EFP on the with the same bridge domain. You can configure only one default EFP per interface. If you try to configure more than command is rejected.
encapsulation priority-tagged	Specifies priority-tagged frames. A priority-tagged packet has VLAN ID 0 and CoS va 7.

If a packet entering or leaving a port does not match any of the encapsulations on that port, the packet is dropped, resulting in *filtering* on both ingress and egress. The encapsulation must match the packet *on the wire* to determine filtering criteria. *On the wire* refers to packets ingressing the router before any rewrites and to packets egressing the router after all rewrites.

Note The router does not allow overlapping encapsulation configurations.

Ethertype

The router uses the default ether types 0x8100 and 0x88a8 for dot1q and Q-in-Q encapsulations.

The ethertypes 0x9100 and 0x9200 are supported using the custom ethertype feature by configuring the **dot1q tunneling ethertype** command on a physical port.

Custom ethertype allows configuration of the ethertype per port. The 0x9100 and 0x9200 ethertypes are supported in the custom ethertype model. 802.1q (0x8100) ethertype is the default ethertype, and is configured under each service instance.

Custom Ethertype

With the custom dot1q ethertype, you can select a non-standard (0x9100 and 0x9200) 2-byte ethertype in order to identify 802.1Q tagged frames. The router is allowed to interoperate with third party vendors' switches that do not use the standard 0x8100 ethertype to identify 802.1Q-tagged frames. For instance, if 0x9100 ethertype is used as the custom dot1q ethertype on a particular port, incoming frames containing the ethertype are assigned to the VLAN contained in the tag, immediately following the ethertype. Frames that arrive on that same port containing ethertypes other than 0x9100 and 0x8100 are forwarded to service instance with untagged encapsulation, if present.

The interface can be configured with the following ethertypes:

- 0x9100
- 0x9200

Restrictions for Custom Ethertypes

- If a custom ethertype is configured under a physical port, all tagged service instances under the physical port are forced to use that particular ethertype.
- Rewrite push is not supported on CET interfaces.
- Custom ethertype is *not* supported on IP configured/routed interfaces.
- Custom ethertype config 0x88a8 is *not* supported. Only 0x9100 and 0x9200 are supported.
- Custom Ethertype dynamic update from Dot1q to Tunneling or Tunneling to Dot1q is *not* supported.
- Outer 0x8100 packets are supported.
- Dot1q Tunneling Ethertype CFI preservation is *not* supported.
- CFM with Custom Ethertype is *not* supported.
- Mac-learning limit is *not* supported.
- 802.1ad not supported for CET.
- DHCP snooping not supported for CET.

Configuration Example

```
interface GigabitEthernet
    dot1q tunneling ethertype [0x9100 | 0x9200]
    service instance 1 ethernet
        encapsulation dot1q vlan 1  [second-dot1q vlan 2]
        rewrite ingress tag pop 1 symmetric
```

Split-Horizon

The split-horizon feature allows service instances in a bridge domain to join groups. Service instances in the same bridge domain and split-horizon group cannot forward data between each other, but can forward data between other service instances that are in the same bridge domain, but not in the same split-horizon group.

Service instances do not have to be in a split-horizon group. If a service instance does not belong to a group, it can send and receive from all ports within the bridge domain. A service instance cannot join more than one split-horizon group.

Enter the **bridge-domain** *bridge-id* **split-horizon group** *group_id* service-instance configuration mode command to configure a split-horizon group. The *group_id* is an integer from 0 to 2. All members of the bridge-domain that are configured with the same *group_id* are part of the same split-horizon group. EFPs that are not configured with an explicit *group_id* do not belong to any group.

You can configure no more than 64 service instances per bridge domain. When a bridge domain contains a service instance that is part of a split-horizon group, this decreases the number of service instances allowed to be configured in that split-horizon group. The switch supports up to three split-horizon groups plus the default (no group).

In Table 2, the left column means that a bridge domain belongs to a service instance that is part of the indicated split horizon group. Therefore, if a service instance joins split-horizon group 2, it can have no more than 16 members in split horizon group 2 in the same bridge domain. We recommend that you add split horizon groups in numerical order to maximize the number of service instances that can belong to a group.

Table 16: Maximum Allowed Service Instance Configuration with and without Split Horizons

Configured in Bridge Domain	Maximum Service Instances in the Group				Total Service Instances in Bridge Domain
	No group	Group 0	Group 1	Group 2	
No Group [1]	64	–	–	–	64
Split Group 0	32	32	–	–	64
Split Group 1	16	16	16	-	48
Split Group 2	16	16	16	16	64

[1] No group refers to a bridge-domain not belonging to any split horizon group. The traffic flows between the EFPs in the same bridge-domain.

Note

- If you configure Split-horizon feature on a bridge-domian without any specific group number mentioned (using only split-horizon keyword without any group number), then by default it is part of group 0 and the scale is inherited as in the Table 2.
- Layer3 BDI interface counter does not increment for traffic transit through Cisco RSP3 Module.

Split Horizon Enhancements on the RSP3 Module

Starting with Cisco IOS XE Release 16.6.1, the **efp_feat_ext** template is introduced. This template when enabled allows configuration of two split-horizon groups on the EVC bridge-domain.

- Two Split-horizon groups—Group 0 and Group 1 are configured through using the **bridge-domain** *bd number* **split-horizon group** *0-1* command.

Prerequisites for Split-Horizon Groups on the RSP3 Module

- The efp_feat_ext template must be configured to enable the feature.
- Metro services license must be enabled; LICENSE_ACTIVE_LEVEL=metroaggrservices,all:ASR-903;

Restrictions for Split-Horizon Groups on the RSP3 Module

- If a VPLS VFI is part of the bridge-domain configuration, the VPLS is by default part of Split-horizon group 0 and the scale for Split-horizon group 1-2 and No group is applicable as in the Table 2.
- The overall scale of EFPs is 8K, only if the split-horizon groups are configured. For information, see supported scale.

Note If split-horizon based-EFPs aren’t configured, the total EFPs supported are 4K.

- EFPs configured on the same bridge domain and same split-horizon group, can't forward to or receive traffic from each other.
- We don't recommended configuration of Y.1564 and split-horizon group on the same EFP.
- We don't recommend configuring MAC security with split-horizon group.
- Split-horizon group isn't supported for CFM on this template. Configuring split-horizon groups on CFM-based MEPs may result in MEPs being unlearned, and unexpected behavior may be observed.
- If ethernet loopback is configured, and if a dynamic change in split-horizon group occurs on the EFP-BD, the ELB session must be restarted.
- A change in the split-horizon group configuration on a regular EFP results in hardware programming update and may impact L2 traffic. This results in a MAC-flush and relearn of traffic with new MAC address.

Following are known behavior of split-horizon groups:

- Changing the split-horizon group on any EFP, results in traffic flooding back to same EFP for few milliseconds.
- A small traffic leak may be observed on defaulting an interface with higher number of EFP with split-horizon configured.
- BFD flaps and underlying IGP flaps may be observed upon changing split-horizon groups, if BFD is hardware-based.

Split-Horizon Supported Scale

8K EFPs are supported across RSP3-400 and 4K EFPs on RSP3-200.

Note If Split-horizon configuration does not exist, number of EFPs supported are reduced to 4K EFPs.

Table 17: Split-Horizon Supported Template

Split-Horizon Group	RSP3-400	RSP3-200
Default (No config)	4K EFP	2K EFP
Group 0	2K EFP	1K EFP
Group 1	2K EFP	1K EFP

Note Port-channel scale is half the regular scale of the EFP.

Configuring Split-Horizon Group on the RSP3 Module

```
interface GigabitEthernet0/2/2
service instance 1 ethernet
```

```
  encapsulation dot1q 100
  bridge-domain 100 split-horizon group 0  When you configure split-horizon group 0,(0
is optional)

 interface GigabitEthernet0/2/2
service instance 2 ethernet
  encapsulation dot1q 102
  bridge-domain 102 split-horizon group 1  When you configure split-horizon group 1
```

Bridge Domains

Table 18: Feature History

Feature Name	Feature Release	Description
Enabling the Bridge Domain Interface	Cisco IOS XE Bengaluru 17.4.1	Starting with the Cisco IOS XE Bengaluru 17.4.1 release, you can configure the **platform bdi enable-state up** global command.

A service instance must be attached to a bridge domain. Flooding and communication behavior of a bridge domain is similar to that of a VLAN domain. Bridge-domain membership is determined by which service instances have joined it, while VLAN domain membership is determined by the VLAN tag in the packet.

You can configure the **platform bdi enable-state-up** global command to enable the BDI interface up without the **no shut** command. You can disable this functionality by using the ***no*** **platform bdi enable-state-up** command on the interface.

Note You must configure encapsulation before you can configure the bridge domain.

Use the **bridge-domain** *bridge-id* service-instance configuration mode command to bind the EFP to a bridge domain instance. The *bridge-id* is the identifier for the bridge domain instance, an integer from 1 to 4000.

You can enable BDI MTU using the **enable_bdi_mtu sdm** template.

Setting Bandwidth

We recommend you set the bandwidth of the BDI associated with 1-Gigabit Ethernet or 10-Gigabit Ethernet interfaces. The default BDI value is 1 Gigabit for both, 1-Gigabit Ethernet and 10-Gigabit Ethernet interfaces.

Use the **bandwidth** command to set the bandwidth on the interfaces.

The following example shows the bandwidth configuration for BDI interface 120:

```
Router(config)# interface bdi 120
Router(config-if)# bandwidth 10000000
Router(config-if)# end
```

The following example displays the configured bandwidth for BDI interface 120:

```
Router# show interface bdi 120
BDI120 is up, line protocol is up
  Hardware is BDI, address is 7426.acf7.2ebf (bia 7426.acf7.2ebf)
  Internet address is 192.168.1.1/24
  MTU 1500 bytes, BW 10000000 Kbit/sec, DLY 10 usec
```

Configuring Platform BDI

Use the following command to configure BDI on the Cisco router

Procedure

Step 1 **configure terminal**

Enter global configuration mode.

Example:

```
Router# configure terminal
```

Step 2 **platform bdi enable-state up**

Example:

```
Router(config)#platform bdi
Router(config)#platform bdi enable-state-up
Router(config)#Platform BDI state up enabled
```

Enables the BDI state on the interface

Step 3 **no platform bdi enable-state up**

Example:

```
Router(config)#platform bdi
Router(config)#no platform bdi enable-state-up
Router(config)#Platform BDI state up disabled
```

Disables the BDI state on the interface

Step 4 **end**

Example:

```
Router(config)# end
```

Return to privileged EXEC mode.

BDI Statistics Support on the RSP3 Module

BDI statistics is supported on the RSP3 module.

The **show interface** command displays the BDI statistics for the interface.

```
Router# show interface bdi12

BDI12 is up, line protocol is up
 Hardware is BDI, address is e089.9d0b.1a3f (bia e089.9d0b.1a3f)
 Internet address is 10.1.2.1/24
 MTU 1500 bytes, BW 1000000 Kbit/sec, DLY 10 usec,
 reliability 255/255, txload 1/255, rxload 1/255
 Encapsulation ARPA, loopback not set
 Keepalive not supported
 ARP type: ARPA, ARP Timeout 04:00:00
```

```
 Last input 00:00:03, output 00:00:02, output hang never
 Last clearing of "show interface" counters never
 Input queue: 0/375/0/0 (size/max/drops/flushes); Total output drops: 0
 Queueing strategy: fifo
 Output queue: 0/40 (size/max)
5 minute input rate 234567 bits/sec, 940 packets/sec
5 minute output rate 237897 bits/sec, 947 packets/sec
 82882 packets input, 8057298 bytes, 0 no buffer
 Received 0 broadcasts (0 IP multicasts)
 0 runts, 0 giants, 0 throttles
 0 input errors, 0 CRC, 0 frame, 0 overrun, 0 ignored
 79345 packets output, 7532374 bytes, 0 underruns
 0 output errors, 0 interface resets
 0 unknown protocol drops
 0 output buffer failures, 0 output buffers swapped out
```

Restrictions for BDI Statistics on the RSP3 Module

- BDI egress statistics does not work for Layer3 control packets such as:
  - OSPF
  - HSRP
  - Ping MPLS
  - BFD control
  - BFD echo
  - IPv6 control
  - IPv6 ping.
- BDI does not support egress pseudowire statistics and routed pseudowire statistics.
- BDI ingress statistics does not include broadcast ping request messages.
- If a QoS policer for cut-down ingress traffic is applied on the EFP or interface, then BDI statistics does not account for the dropped traffic in ingress direction.
- BDI statistics may deviate from the actual data rate either in terms of Mbps or packets/sec with a tolerance of 10%.
- BDI statistics does not account the unknown MAC packets that are flooded on a BDI.
- The following restrictions are applicable for Bridge Domain Interface (BDI) Maximum Transmission Unit (MTU) for the Cisco RSP3 module:
  - Supports upto three unique BDI MTU and the fourth MTU is inherited from the port MTU.
  - The **enable_bdi_mtu sdm** template with short pipe is not supported.
  - If QoS is configured, the four duplicate QoS policy entries in addition to the original QoS policy entry are configured to match the possible MTU profiles.
  - The shutting of IP BDI does not result in freeing up profiles.
  - Ingress HQoS policer is not supported.
  - BFD Echo is not supported.

Configuring BDI MTU

To configure BDI MTU, enter the following commands:

```
Router (config)#interface bdi 500
Router (config-if)#ip address 199.168.1.2 255.255.255.0
Router (config-if)#ip mtu 3000
Router (config-if)#ip router isis CS
Router (config-if)#isis network point-to-point
```

Verifying BDI MTU Configuration

To verify the BDI MTU configuration, enter the following commands:

```
Router#show interface bdi500
interface BDI500
 ip address 199.168.1.2 255.255.255.0
 ip mtu 3000
 ip router isis CS
 isis network point-to-point
```

Rewrite Operations

You can use the **rewrite** command to modify packet VLAN tags. You can use this command to emulate traditional 802.1Q tagging, where packets enter a router on the native VLAN and VLAN tagging properties are added on egress. You can also use the **rewrite** command to facilitate VLAN translation and QinQ.

The Cisco router supports only these **rewrite** commands.

- **rewrite ingress tag pop 1 symmetric**
- **rewrite ingress tag pop 2 symmetric**
- **rewrite ingress tag push dot1q** *vlan-id* **symmetric**

Enter the **rewrite ingress tag pop** {**1** | **2**} **symmetric** service-instance configuration mode command to specify the encapsulation adjustment to be performed on the frame ingress to the EFP. Entering **pop 1** pops (removes) the outermost tag; entering **pop 2** removes two outermost tags.

Note The **symmetric** keyword is required to complete **rewrite** to configuration.

When you enter the **symmetric** keyword, the egress counterpart performs the inverse action and pushes (adds) the encapsulation VLAN. You can use the **symmetric** keyword only with ingress rewrites and only when single VLANs are configured in encapsulation. If you configure a list of VLANs or a VLAN range or **encapsulation default** or **encapsulation any**, the **symmetric** keyword is not accepted for rewrite operations.

Restrictions for Rewrite

- The router does *not* support **rewrite** commands for **translate** in release 3.7.

- Possible translation combinations are 1-to-1, 1-to-2, 2-to-1, and 2-to-2. When forwarding to or from a Layer 2 port, you cannot achieve 2-to2 translation because a Layer 2 port is implicitly defined to be **rewrite ingress tag pop 1 symmetric**.
- The router does *not* support egress rewrite operations beyond the second VLAN that a packet carries. Because of the egress rewrite limitation, if an EFP has a **pop 2 rewrite** operation at ingress, no other EFP in the same bridge domain can have a rewrite operation.
- Rewrite PUSH configuration over port-channel is *not* supported for bridge domain interfaces.

Static MAC Addresses

The Cisco router supports multicast static MAC addresses, which allow you to enable multicast at the layer 2 level. You can use multicast static MAC addresses to forward multicast packets to specific EFPs on a network.

For instructions on how to configure static MAC addresses, see Configuring a Static MAC Address.

Layer 2 Protocol Features

The Cisco router supports layer 2 protocol peering, forwarding, and tunneling on CDP, LACP, LLDP, PAGP, STP, UDLD, and VTP traffic.

Layer 2 Control Protocol Enhancements

Table 19: Feature History

Feature Name	Release Information	Feature Description
Layer 2 Control Protocol Enhancements	Cisco IOS XE Cupertino 17.9.1	Enhancements of the Layer 2 Control Protocols (L2CP) propagate the MAC address control information to determine which parts of a network the router should forward, tunnel, peer, or discard information. • MRP Block • Cisco BPDU • Cisco STP UplinkFast • Cisco CFM

We support forwarding, tunneling, peering, and discarding options for Ethernet Virtual Circuits (EVCs), which define a Layer 2 bridging architecture to support Ethernet services. The following table describes the options that are supported by various destination MAC addresses and L2CPs:

Protocol/Dest MAC Addr	EtherType/SubType	Tunnel	Forward	Peer	Discard
STP/RSTP/MSTP 01-80-C2-00-00-00	—	Supported	Supported	Supported	Supported
CDP	—	Supported	Supported	Supported	Supported
ELMI 01-80-C2-00-00-07	0X88EE	Supported	Supported	Supported	Supported
DOT1X 01-80-C2-00-00-03	0X888E	Supported	Supported	Supported	Supported
ESMC 01-80-C2-00-00-02	0X8809/0A	Supported	Supported	Supported	Supported
LACP 01-80-C2-00-00-02	0X8809/01/02	Supported	Supported	Supported	Supported
LLDP 01-80-C2-00-00-0E	0X88C	Supported	Supported	Supported	Supported
LINK OAM 01-80-C2-00-00-02	0X8809/03	Supported	Supported	Supported	Supported
PAGP	—	Supported	Supported	Supported	Supported
PTP Peer delay 01-80-C2-00-00-0E	0X88F7	Supported	Supported	Supported	Supported
UDLD	—	Supported	Supported	Supported	Supported
VTP	—	Supported	Supported	Supported	Supported
Reserved Protocol using DA MAC 0180.C200.0004 - 0180.C200.000F	—	Supported	Supported	Supported	Supported
MMRP 01-80-C2-00-00-20	0x88F6	Supported	Supported	Not Supported	Supported
MVRP 01-80-C2-00-00-21	0x88F5	Supported	Supported	Not Supported	Supported

Protocol/Dest MAC Addr	EtherType/SubType	Tunnel	Forward	Peer	Discard
MRP Block 01-80-C2-00-00-20 through 01-80-C2-00-00-2F	—	Not Supported	Supported	Not Supported	Supported
Cisco BPDU 01-00-0C-CC-CC-CE	—	Not Supported	Supported	Not Supported	Supported
Cisco STP Uplink Fast 01-00-0C-CD-CD-CD	—	Not Supported	Supported	Not Supported	Supported
Cisco CFM 01-00-0C-CC-CC-C3	—	Not Supported	Supported	Not Supported	Supported

L2CP Forward Configuration

```
R55(config-if-srv)#service instance 1 ethernet
R55(config-if-srv)#l2protocol forward
  R4     Reserved Protocol using DA Mac 0180.C200.0004
  R5     Reserved Protocol using DA Mac 0180.C200.0005
  R6     Reserved Protocol using DA Mac 0180.C200.0006
  R8     Reserved Protocol using DA Mac 0180.C200.0008
  R9     Reserved Protocol using DA Mac 0180.C200.0009
  RA     Reserved Protocol using DA Mac 0180.C200.000A
  RB     Reserved Protocol using DA Mac 0180.C200.000B
  RC     Reserved Protocol using DA Mac 0180.C200.000C
  RD     Reserved Protocol using DA Mac 0180.C200.000D
  RF     Reserved Protocol using DA Mac 0180.C200.000F
  cbpdu  Cisco Bridge Protocol Data Unit
  ccfm   Cisco CFM
  cdp    Cisco Discovery Protocol
  cstp   Cisco STP Uplink Fast
  dot1x  Dot1x Protocol
  elmi   ELMI Protocol
  esmc   ESMC Protocol
  lacp   LACP Protocol
  lldp   Link Layer Discovery Protocol
  loam   Link OAM Protocol
  mmrp   Multiple MAC Registration Protocol
  mrpb   MRP Block Protocol
  mvrp   Multiple VLAN Registration Protocol
  pagp   Port Aggregation Protocol
  ptppd  PTP Peer Delay Protocol
  stp    Spanning Tree Protocol
  udld   UDLD Protocol
  vtp    Vlan Trunking Protocol
  <cr>   <cr>

R55(config-if-srv)#l2protocol forward
 Configured Platform supported protocols
 cdp stp vtp pagp dot1x lldp lacp udld loam esmc elmi ptppd R4 R5 R6 R8 R9 RA RB RC RD RF
mmrp mvrp mrpb cbpdu cstp ccfm
R55(config-if-srv)#do show run int gi0/0/1
```

```
Building configuration...

Current configuration : 287 bytes
!
interface GigabitEthernet0/0/1
 no ip address
 negotiation auto
 service instance 1 ethernet
  encapsulation untagged
  l2protocol forward cdp stp vtp pagp dot1x lldp lacp udld loam esmc
elmi ptppd R4 R5 R6 R8 R9 RA RB RC RD RF mmrp mvrp mrpb cbpdu cstp ccfm
  bridge-domain 1
 !
end
R55(config-if-srv)#l2protocol forward
R55(config-if-srv)#l2protocol forward
 Configured Platform supported protocols  cdp stp vtp pagp dot1x lldp lacp udld loam esmc
elmi ptppd R4 R5 R6 R8 R9 RA RB RC RD RF mmrp mvrp mrpb cbpdu cstp ccfm
R55(config-if-srv)#do show run int gi0/0/1
Building configuration...

Current configuration : 287 bytes
!
interface GigabitEthernet0/0/1
 no ip address
 negotiation auto
 service instance 1 ethernet
  encapsulation untagged
  l2protocol forward cdp stp vtp pagp dot1x lldp lacp udld
loam esmc elmi ptppd R4 R5 R6 R8 R9 RA RB RC RD RF mmrp mvrp mrpb cbpdu cstp ccfm
  bridge-domain 1
 !
end
```

Verification of L2CP Configuration

```
R55#show ethernet service instance id 1 int GigabitEthernet0/0/1 platform
Service Instance (EFP) L2 PDU Handing Info
EFP               CDP   STP   VTP   DTP   PAGP  LLDP  LACP  UDLD  LOAM  ESMC  ELMI  PTPPD
 RES4  RES5  RES6  RES8  RES9  RESA  RESB  RESC  RESD  RESF  MMRP  MVRP  MRPB  CBPD  CSTP
 CCFM  CFG  NH
-----------------------------------------------------------------------------------------------------------------------------------
Gi0/0/1.Efp1      FRWD  FRWD  FRWD  DROP  FRWD  FRWD  FRWD  FRWD  FRWD  FRWD  FRWD  FRWD
 FRWD  FRWD  FRWD  FRWD  FRWD  FRWD  FRWD  FRWD  FRWD  FRWD  FRWD  FRWD  FRWD  FRWD  FRWD
 FRWD  N    N

EFP L2PT Tunnel statistics
----------------------------------------
L2protocol        Encapped      Decapped
----------------------------------------
CDP:              0             0
STP:              0             0
VTP:              0             0
DTP:              0             0
PAGP:             0             0
LLDP:             0             0
LACP:             0             0
UDLD:             0             0
LOAM:             0             0
ESMC:             0             0
ELMI:             0             0
PTPPD:            0             0
MMRP:             0             0
```

```
MVRP:             0             0
MRPB:             0             0
CBPDU:             0             0
CSTP:             0             0
CCFM:             0             0
Total Active Session(s): 1
Total Internal Session(s): 1
Total External Session(s): 0
```

L2CP Discard Configuration

```
R55(config-if-srv)#l2protocol discard ?
  R4     Reserved Protocol using DA Mac 0180.C200.0004
  R5     Reserved Protocol using DA Mac 0180.C200.0005
  R6     Reserved Protocol using DA Mac 0180.C200.0006
  R8     Reserved Protocol using DA Mac 0180.C200.0008
  R9     Reserved Protocol using DA Mac 0180.C200.0009
  RA     Reserved Protocol using DA Mac 0180.C200.000A
  RB     Reserved Protocol using DA Mac 0180.C200.000B
  RC     Reserved Protocol using DA Mac 0180.C200.000C
  RD     Reserved Protocol using DA Mac 0180.C200.000D
  RF     Reserved Protocol using DA Mac 0180.C200.000F
  cbpdu  Cisco Bridge Protocol Data Unit
  ccfm   Cisco CFM
  cdp    Cisco Discovery Protocol
  cstp   Cisco STP Uplink Fast
  dot1x  Dot1x Protocol
  elmi   ELMI Protocol
  esmc   ESMC Protocol
  lacp   LACP Protocol
  lldp   Link Layer Discovery Protocol
  loam   Link OAM Protocol
  mmrp   Multiple MAC Registration Protocol
  mrpb   MRP Block Protocol
  mvrp   Multiple VLAN Registration Protocol
  pagp   Port Aggregation Protocol
  ptppd  PTP Peer Delay Protocol
  stp    Spanning Tree Protocol
  udld   UDLD Protocol
  vtp    Vlan Trunking Protocol
  <cr>   <cr>
R55(config-if-srv)#l2protocol discard
 Configured Platform supported protocols  cdp stp vtp pagp dot1x lldp lacp udld loam esmc
elmi ptppd R4 R5 R6 R8 R9 RA RB RC RD RF mmrp mvrp mrpb cbpdu cstp ccfm
R55(config-if-srv)#do show run int gi0/0/1
Building configuration...

Current configuration : 287 bytes
!
interface GigabitEthernet0/0/1
 no ip address
 negotiation auto
 service instance 1 ethernet
  encapsulation untagged
  l2protocol discard cdp stp vtp pagp dot1x lldp lacp udld loam esmc elmi ptppd R4 R5 R6
R8 R9 RA RB RC RD RF mmrp mvrp mrpb cbpdu cstp ccfm
  bridge-domain 1
 !
end
```

Layer 2 Control Protocol Restrictions

Configuring Layer 2 Control Protocol Tunnel

To configure the Layer 2 control protocol options such as discard, forward, or tunnel on dot1q port, use the following commands:

```
interface GigabitEthernet 0/0/1
ethernet dot1ad uni s-port
service instance 2 ethernet
[no] l2protocol discard mmrp mvrp
[no] l2protocol forward mmrp mvrp
[no] l2protocol tunnel mmrp mvrp
```

The following example is a configuration example to forward on the dot1ad port:

```
interface GigabitEthernet 0/0/2
description connected to Tester A.1
no ip address
ethernet dot1ad uni s-port
service instance 2 ethernet
encapsulation default
[no] l2protocol forward mmrp|mvrp
```

EVC Egress Filtering for the RSP3 Module

EVC Filtering is used to filter out packets that are going out on an attachment or Access circuit (AC) when the packets do not match a given tag format. The packets are filtered based on the matching tag format at the ingress point of the AC. At the egress point of the AC, the packets are matched based on VLAN parameters. If the packets do not match the expected VLAN tag, then the packets get dropped for that AC.

To enable EVC filtering, you need to enable the **sdm prefer efp_feat_ext** template. This template when enabled, filters out packets at the egress point of the AC. Use **sdm prefer no_efp_feat_ext** to disable EVC filtering at the egress point of the AC.

Restrictions for EVC Egress Filtering

- The Loss Measurement Message (LMM) and Delay Measurement Message (DMM) up MEP feature cannot be configured when the EVC filtering is enabled.
- When rewrite ingress push dot1q vlan symmetry is configured under an EFP at egress, the VLAN tag would be removed without matching the value against push dot1q vlan configured.
- The filtering at egress is not supported, if the VLAN range is configured.
- The VLAN tag-based filtering is only supported. The cos value and ext-etype (ether type) based filtering are not supported on RSP3 platforms.
- EVC filtering can be applied only to the two outermost tags in the packet and beyond those two outermost tags, the filtering is not applied.
- EFP egress statistics get incremented even if a packet is dropped due to egress filtering.
- The egress filtering for EFP with encapsulation untagged is not supported.
- EVC filtering with Y.1564 (based on FPGA) is not supported for Q-in-Q traffic.

- EVC filtering with split horizon group scale numbers are reduced as follows:

```
SH default group: 1k efp per asic
SH group 0:  500 efp per asic
SH group 1:  500 efp per asic
```

Configuration Examples for EVC Filtering for the RSP3 Module

Example when EVC filtering is not enabled.

Ingress interface configuration:

```
interface gi0/0/1
service instance 105 ethernet
encapsulation dot1q 106
bridge-domain 105
```

Egress interface configuration:

```
interface gi0/2/1
service instance 105 ethernet
encapsulation dot1q 10
bridge-domain 105
```

In the above configuration, the traffic egresses out from the service instance 105 configured on the interface gi0/2/1 and VLAN tag matching will not happen. When EVC filtering is enabled, there will be a traffic drop due to VLAN tag matching. In case user wants to get the traffic flow, then following configuration should be applied in the service instance 105 on interface gi0/2/1.

Egress interface configuration:

```
interface gi0/2/1
service instance 105 ethernet
encapsulation dot1q 106
bridge-domain 105
```

Configuring EFPs

Default EVC Configuration

No EFPs are configured. No service instances or bridge domains are configured.

Configuration Guidelines

The following guidelines apply when you configure EVCs.

Note For information about supported EVC scale, see the Cisco NCS 4200 Series Software Configuration Guide.

- To configure a service instance on an interface, these commands are prerequisites:

```
Router (config)# interface gigabitethernet0/0/1
Router (config-if)# service instance 22 Ethernet ether
Router (config-if-srv)# encapsulation dot1q 10
Router (config-if-srv)# bridge-domain 10
```

- You must configure encapsulation on a service instance before configuring bridge domain.
- ISL trunk encapsulation is not supported.
- The router does not support overlapping configurations on the same interface and same bridge domain. If you have configured a VLAN range encapsulation, or encapsulation default, or encapsulation any on service instance 1, you cannot configure any other encapsulations that also match previous encapsulations in the same interface and bridge domain.
- QinQ is not supported on Trunk EFP interfaces.

Creating Service Instances

Beginning in privileged EXEC mode, follow these steps to create an EFP service instance:

Procedure

Step 1 **configure terminal**

Enter global configuration mode.

Step 2 **interface** *interface-id*

Specify the port to attach to the policy map, and enter interface configuration mode. Valid interfaces are physical ports.

Step 3 **service instance** *number* **ethernet** [*name*]

Configure an EFP (service instance) and enter service instance configuration) mode.

- The number is the EFP identifier, an integer from 1 to 4000.
- (Optional) **ethernet** name is the name of a previously configured EVC. You do not need to use an EVC name in a service instance.

Step 4 **encapsulation** {**default** | **dot1q** | **priority-tagged** | **untagged**}

Configure encapsulation type for the service instance.

- **default**—Configure to match all unmatched packets.
- **dot1q**—Configure 802.1Q encapsulation. See for details about options for this keyword.
- **priority-tagged**—Specify priority-tagged frames, VLAN-ID 0 and CoS value of 0 to 7.

- **untagged**—Map to untagged VLANs. Only one EFP per port can have untagged encapsulation.

Step 5 **rewrite ingress tag pop** {**1** | **2**} **symmetric**

(Optional) Specify that encapsulation modification to occur on packets at ingress.

- **pop 1**—Pop (remove) the outermost tag.
- **pop 2**—Pop (remove) the two outermost tags.
- **symmetric—**Configure the packet to undergo the reverse of the ingress action at egress. If a tag is popped at ingress, it is pushed (added) at egress. This keyword is required for **rewrite** to function properly.

Step 6 **bridge-domain** *bridge-id* [**split-horizon group** *group-id*]

Configure the bridge domain ID. The range is from 1 to 4000.

You can use the **split-horizon** keyword to configure the port as a member of a split horizon group. The *group-id* range is from 0 to 2.

Step 7 **end**

Return to privileged EXEC mode.

Step 8 **show ethernet service instance show bridge-domain** [*n* | **split-horizon]**

Verify your entries.

Step 9 **copy running-config startup-config**

(Optional) Save your entries in the configuration file.

Use the **no** forms of the commands to remove the service instance, encapsulation type, or bridge domain or to disable the rewrite operation.

Creating a Trunk EFP

Beginning in privileged EXEC mode, follow these steps to create an EFP service instance:

Note Use the no forms of the commands to remove the service instance, encapsulation type, or bridge domain or to disable the rewrite operation.

Note Trunk EFPs on port-channel interfaces is supported. Traffic may *not* flow to the TEFP when the port-channel or its member links are in down state.

Procedure

Step 1 **configure terminal**

Enter global configuration mode.

Step 2 **interface** *interface-id*

Specify the port to attach to the policy map, and enter interface configuration mode. Valid interfaces are physical ports.

Step 3 **service instance** [**trunk**] *number* **ethernet**

Configure an EFP (service instance) and enter service instance configuration) mode.

- The number is the EFP identifier, an integer from 1 to 4000.
- The trunk keyword identifies the trunk ID to which the service instance is assigned.

Note Trunk EFP (without port channel) supports encapsulation of up to 1000 VLANS.

Step 4 **encapsulation** {**default** | **dot1q** | **priority-tagged** | **untagged**}

Note Only dot1q encapsulation is supported on trunk EFPs.

Configure encapsulation type for the service instance.

- **default** —Configure to match all unmatched packets.
- **dot1q** —Configure 802.1Q encapsulation. See Table 1 for details about options for this keyword.
- **priority-tagged** —Specify priority-tagged frames, VLAN-ID 0 and CoS value of 0 to 7.
- **untagged** —Map to untagged VLANs. Only one EFP per port can have untagged encapsulation.

Step 5 **rewrite ingress tag pop** {**1** | **2**} **symmetric**

(Optional) Specify that encapsulation modification to occur on packets at ingress.

- **pop 1** —Pop (remove) the outermost tag.
- **pop 2** —Pop (remove) the two outermost tags.

  Caution The **pop2** option is not currently supported on Trunk EFPs.

- **symmetric**—Configure the packet to undergo the reverse of the ingress action at egress. If a tag is popped at ingress, it is pushed (added) at egress. This keyword is required for rewrite to function properly.

Step 6 **bridge-domain** *bridge-id*

Configures the router to derive bridge domains from the encapsulation VLAN list.

Step 7 **end**

Return to privileged EXEC mode.

Step 8 Use one of the following commands

- **show ethernetservice instance**
- **show bridge-domain** *[n* | **split-horizon**]

Verify your entries.

Step 9 **copy running-config startup-config**

(Optional) Save your entries in the configuration file.

Configuring Asymmetric EFPs

You can configure asymmetric rewrite rules in both ingress and egress directions of the EFP.

Encapsulation (EVC filtering) is verified at the egress for these rewrite rules:

- No rewrite rule
- Rewrite rule is **rewrite ingress tag push dot1q <value> symmetric**
- Rewrite rule is **rewrite ingress tag push dot1q <value>**
- Rewrite rule is **rewrite egress tag pop 1**

Pre-requisites

- Ensure that split-horizon groups are configured to avoid flooding between EFPs of the same Bridge Domain (BD).

Restrictions

- Transparent CFM is not supported with Asymmetric EFP.
- Q-in-Q encapsulation type in the EFP is not supported. Frames with dot1q greater than value 1 is supported. Dot1ad is not supported.
- Trunk-EFPs usage is not supported
- 2 Tag push or pop is not supported.
- Translate option, in VLAN Translation, is not supported with asymmetric rewrite rules.
- External Loopback operations are not supported.
- Ignoring MLD reports (IPv6) is not supported
- When the encapsulation is untagged in one of the EFPs, for example if **rewrite egress tag pop 1** is configured on the EFP, then **rewrite ingress tag pop 1** will cancel the rewrite rule and the packet is sent without rewrites.
- If there are different EFPs in the same BD that are carrying unicast and multicast traffic, then MAC learning should be disabled on the multicast EFP using **disable-learning** command.
- Asymmetric rewrite configuration fails for the priority-tagged encapsulation.
- When the encapsulation is untagged in one of the EFPs, for example if **rewrite egress tag pop 1** is configured on the EFP, then single tagged frames will cancel the rewrite rule and the packet is sent without rewrites.
- When two EFPs are configured at the egress under the same bridge-domain such that one of the EFPs matches the tag pushed at the egress and the other EFP does not check for encapsulation match, MAC movement can happen between the EFPs which would lead the VLAN tagging output based on the EFP

on which the MAC address is learnt at the given point in time. This is an expected behavior by design. Split-horizon can be used to isolate the EFPs to avoid this behavior.

Procedure

```
enable
configure terminal
interface TenGigabitEthernet0/0/26
no ip address
service instance 1 ethernet
encapsulation dot1q 30
rewrite ingress tag pop 1
igmp ingress ignore-rewrite
bridge-domain 30
end
```

Setting up EVCs as Track Clients

Table 20: Feature History

Feature Name	Release Information	Description
Service Instance as Track Client	Cisco IOS XE Dublin 17.12.1	Track can be configured to check for reachability to IBR(Upstream router). If IBR is not reachable, the service instance is kept in admin down state. This avoids traffic drop until the route is installed which optimizes the convergence. Currently, IOS XE platforms do not have options to shutdown EFP based on track reachability.

Restrictions using Track on EFP

- Track for static route is always in UP state. We recommend you use different track options like IP SLA tracking in such cases.
- In a VRRP and G8032 interoperability scenario, while configuring track under EFP for data Vlans in VRRP master node, may cause traffic drop when track is down. Thus, we recommend that you configure track under APS VLAN in this scenario. This triggers the G8032 state change and unblocks the port for traffic forwarding.

Enabling Track on EFP

Use the following steps to configure EFP as track client:

1. Configure track to check the reachability.
2. Configure EFP (service instance 100 on the interface 0/3/4) as the track client.

```
Router# config terminal
Configuring from terminal, memory, or network [terminal]?
Enter configuration commands, one per line.  End with CNTL/Z.
```

```
Router(config)#track 10 ip route 5.5.5.5 255.255.255.255 reachability
Router(config-track)#exit

Router(config)#interface TenGigabitEthernet0/3/4
Router(config-if)# service instance 100 ethernet
Router(config-if-srv)#  track 10
Router(config-if-srv)#exit
```

Verifiying Track on EFP

Use the **show track** command to check the EFP track state:

In the below example, Track 10 is configured for Route reachablity. The service instance 100 displays the state as UP.

```
R22#show track
Track 10
  IP route 10.10.10.5 255.255.255.255 reachability
  Reachability is Up (OSPF)
    3 changes, last change 00:00:15
  First-hop interface is BDI20
  Tracked by:
    EFP 0


R22#show ethernet service instance int ten0/3/4 detail
Service Instance ID: 100
Service Instance Type: Static
Associated Interface: TenGigabitEthernet0/3/4
Associated EVC:
L2protocol drop
CE-Vlans:
Encapsulation: dot1q 100 vlan protocol type 0x8100
Rewrite: ingress tag pop 1 symmetric
Interface Dot1q Tunnel Ethertype: 0x8100
State: Up
EFP Statistics:
   Pkts In   Bytes In   Pkts Out  Bytes Out
   4947292 2083969314    1893810  795847728
EFP Microblocks:
```

In the below example, the track reachability is in DOWN state. The service instance displays the track is in DOWN state.

```
R22#show track
Track 10
  IP route 10.10.10.5 255.255.255.255 reachability
  Reachability is Down (no ip route)
    2 changes, last change 00:03:07
  First-hop interface is unknown
  Tracked by:
    EFP 0
R22#show ethernet service instance int ten0/3/4 detail
Service Instance ID: 100
Service Instance Type: Static
Associated Interface: TenGigabitEthernet0/3/4
Associated EVC:
L2protocol drop
CE-Vlans:
Encapsulation: dot1q 100 vlan protocol type 0x8100
Rewrite: ingress tag pop 1 symmetric
Interface Dot1q Tunnel Ethertype: 0x8100
State: Down by track 10
EFP Statistics:
```

```
   Pkts In   Bytes In   Pkts Out  Bytes Out
   3793027 1596896192    1893810  795847728
EFP Microblocks:
```

Configuration Examples

Example for Configuring a Service Instance

Example for Encapsulation Using a VLAN Range

Configuration Example for Larger String VLAN in Encapsulation

Configuration Example

```
  show running config

ethernet service multi-line
  !
  interface GigabitEthernet0/0/0
   service instance 1 ethernet
    encapsulation dot1q 10,13,19-21,24,29,32-36,41,46-48,55,61,63-66
    encapsulation dot1q add 69-73,78,80,83-86
   !
   service instance 2 ethernet
    encapsulation dot1q 1 second-dot1q 10,13,19-21,24,29,32-36,41
    encapsulation dot1q add outer 2-5,7
    encapsulation dot1q add inner 46-48,55,61,63-66,69-73,78,80,83-86
    encapsulation dot1q add inner 91,95-99,101
   !
   interface GigabitEthernet0/0/0
    ethernet dot1ad nni
    service instance 3 ethernet
    encapsulation dot1ad 10,13,19-21,24,29,32-36,41,46-48,55,61,63-66
    encapsulation dot1ad add 69-73,78,80,83-86
   !
   service instance 4 ethernet
    encapsulation dot1ad 1 dot1q 10,13,19-21,24,29,32-36,41,46-48,55
    encapsulation dot1ad add inner 61,63-66,69-73,78,80,83-86
   !
  !
```

Example for Two Service Instances Joining the Same Bridge Domain

In this example, service instance 1 on interfaces Gigabit Ethernet 0/0/1 and 0/0/2 can bridge between each other.

Example for Bridge Domains and VLAN Encapsulation

Unlike VLANs, the bridge-domain number does not need to match the VLAN encapsulation number.

However, when encapsulations do not match in the same bridge domain, traffic cannot be forwarded. In this example, the service instances on Gigabit Ethernet 0/0/1 and 0/0/2 can not forward between each other, since the encapsulations don't match (filtering criteria). However, you can use the **rewrite** command to allow communication between these two.

Example for Rewrite

In this example, a packet that matches the encapsulation will have one tag removed (popped off). The **symmetric** keyword allows the reverse direction to have the inverse action: a packet that egresses out this service instance will have the encapsulation (VLAN 10) added (pushed on).

Example for Split Horizon

In this example, service instances 1 and 2 cannot forward and receive packets from each other. Service instance 3 can forward traffic to any service instance in bridge domain 3000 since no other service instance in bridge domain 3000 is in split-horizon group 2. Service instance 4 can forward traffic to any service instance in bridge domain 3000 since it has not joined any split-horizon groups.

Example for Hairpinning

The switch supports *hairpinning*, which refers to traffic ingressing and egressing same interface. To achieve haripinning, configure two EFPs in the same bridge domain on the same physical interface, as in this example.

Example for Egress Filtering

In EVC switching, egress filtering is performed before the frame is sent on the egress EFP. Egress filtering ensures that when a frame is sent, it conforms to the matching criteria of the service instance applied on the ingress direction. EFP does not require egress filtering if the number of pops is the same as the number of VLANs specified in the **encapsulation** command.

Egress Filtering is not supported on the RSP3 module.

Note Specifying the **cos** keyword in the encapsulation command is relevant only in the ingress direction. For egress filtering, **cos** is ignored.

For example, consider the following configuration.

If a packet with VLAN tag 10 or 20 is received on Gigabit Ethernet 0/0/3, the ingress logical port would be service instance 3. For the frame to be forwarded on a service instance, the egress frame must match the encapsulation defined on that service instance after the rewrite is done. Service instance 1 checks for outermost VLAN 20; service instance 2 checks for VLAN 30. In this example, the frame with VLAN tags 10 and 20 can be sent to service instance 1 but not to service instance 2.

Configuring Examples for Asymmetric EFPs

Configuring Asymmetric EFP with POP

```
enable
configure terminal
interface TenGigabitEthernet0/0/26
no ip address
service instance 1 ethernet
encapsulation untagged
rewrite egress tag pop 1
bridge-domain 30
end
```

Configuring Asymmetric EFP with Single Tag Push

```
enable
configure terminal
interface TenGigabitEthernet0/0/26
no ip address
service instance 1 ethernet
encapsulation untagged
rewrite ingress tag push dot1q 10
bridge-domain 30
end
```

Configuring Asymmetric EFP with Ingress VLAN Rewrite Disabled for IGMP Control Packets"

```
enable
configure terminal
interface TenGigabitEthernet0/0/26
no ip address
service instance 1 ethernet
encapsulation dot1q 30
rewrite ingress tag pop 1
igmp ingress ignore-rewrite
bridge-domain 30
end
```

Configuring Asymmetric EFP with Disabled MAC Address Learning

```
enable
configure terminal
interface TenGigabitEthernet0/0/26
no ip address
service instance 1 ethernet
encapsulation dot1q 30
rewrite egress tag push dotq 30
disable-learning
bridge-domain 30 split-horizon group 1
end
```

Configuring Other Features on EFPs

EFPs and EtherChannels

You can configure EFP service instances on EtherChannel port channels, but EtherChannels are not supported on ports configured with service instances. Load-balancing on port channels is based on the MAC address or IP address of the traffic flow on the EtherChannel interface.

This example configures a service instance on an EtherChannel port channel. Configuration on the ports in the port channel are independent from the service instance configuration.

```
Router (config)# interface port-channel 4
Router (config-if)# service instance 1 ethernet
Router (config-if-srv)# encapsulation untagged
Router (config-if-srv)# bridge-domain {any vlan}
Router (config-if-srv)# l2protocol peer {lacp | pagp}
```

Layer 2 Protocol Peering

For Layer 2 protocols (CDP, UDLD, LLDP, MSTP, LACP,) to peer with a neighbor on a port that has an EFP service instance configured, you need to enter the **l2 protocol peer** *protocol* service-instance configuration command on the service instance.

This example shows how to configure CDP to peer with a neighbor on a service instance:

Layer 2 Protocol Software Forwarding

Layer 2 protocol forwarding is based on the bridge domain ID and the destination MAC address.

Selecting the l2protocol forward option causes the router to flood interfaces in the same VLAN or bridge-domain with untagged or tagged BPDU packets. You can apply the l2protocol forward command to CDP, LACP, LLDP, PAGP, STP, UDLD, and VTP traffic. This is an example how to configure the l2protocol forward option:

Layer 2 Protocol Hardware Forwarding

When a Layer 2 protocol tunnel or forward is configured, all the packets are punted to the CPU in different CPU queues. When this traffic comes at a very high rate, CPU gets busy in processing these packets and protocol flaps are seen. These packets are then reinjected back by the CPU, for forwarding. This leads to instability in the network.

In RSP3 module, the Layer 2 control protocol (L2CP) frames can now be transparently forwarded using the **l2protocol forward** *protocol* command, via hardware without punting to the CPU.

The only L2CP frames supported for hardware forwarding are - cdp, stp, vtp, pagp, dot1x, lldp, lacp, udld, loam, esmc, elmi, ptppd, mmrp, mvrp, and mac-sec frames.

Effective from Cisco IOS-XE release 16.12.2, a new SDM template- **enable_l2pt_fwd_all** is introduced to include hardware forwarding of ARP broadcast frames and IS-IS multicast frames. These two frames are hardware forwarded in addition to the L2CP frames.

Restrictions

- Routed pseudowire is not supported on the **enable_l2pt_fwd_all** SDM template.
- Layer 2 protocol hardware forwarding is supported only on cross-connect and local connect interfaces.
- The hardware switching of packets is supported only if all the protocols are selected to do the forwarding. Hardware forwarding will fail if a specific protocol is mentioned under **l2protocol forward** *protocol* commnad.
- Selective forwarding, tunneling, or peering is not supported on the same EFP.
- Hardware forwarding is not supported for EVC bridge domain.
- L2CP forward and ACLs are mutually exclusive. After Layer 2 protocol hardware forwarding is configured, MAC and IP ACL on the EPF that are Layer 2 protocol hardware forwarded, are not supported.
- Layer 2 protocol peering is not supported on the EVC that has Layer 2 protocol hardware forwarding.
- Layer 2 protocol hardware forwarding is not supported over active-active PC.
- Unless the cross-connect or local connect is up, packets are not hardware forwarded.. If either local or remote cross-connect is down, L2CP packets are punted to CPU, since the circuit is down.
- When the system events like IM-OIR, SSO, or reload are triggered, packets are punted to CPU for a brief period of time. This is because cross-connect goes down after the events are triggered.
- Maximum number of Layer 2 protocol hardware forwarding sessions supported is 1000.
- Storm-control is not supported for L2CP traffic.
- Hardware forwarding of untagged L2CP frames over a dynamic port-channel (LACP) cross-connect interface is not supported.

Configuring Layer 2 Protocol Hardware Forwarding

The following is an example of how to configure Layer 2 protocol hardware forwarding on cross-connect:

```
interface GigabitEthernet0/9/0
 no ip address
 service instance 1 ethernet
 encap default
 l2protocol forward
 xconnect 10.0.0.2 2 encapsulation mpls
```

In the below example, we verify that the queue count involving NFT statistics Layer 2 protocol/STP does not increment at high rate while Layer 2 protocol hardware forwarding takes place:

```
Show platform hardware pp active  infrastructure pi nft statistics | sec
 L2
  1          L2 control/legacy                6503
  5          STP Q                          402923          0
  6          L2 PROTOCOL Q                  111505          0
  28         L2PT DUP Q                     459466          0

Show platform hardware pp active  infrastructure pi nft statistics | sec
 L2|STP
  1          L2 control/legacy                6532
  5          STP Q                          409365          0
  6          L2 PROTOCOL Q                  111533          0
```

```
 28          L2PT DUP Q                      465883           0
```

The following is an example of how to configure Layer 2 protocol hardware forwarding on local connect:

```
interface GigabitEthernet0/9/0
 no ip address
 service instance 1 ethernet
 encap dot1q 20
 l2protocol forward

Interface Gi0/10/0
 no ip address
 service instance 1 ethernet
 encap dot1q 20
 l2protocol forward

l2vpn xconnect context localconnect1
member gi0/9/0 service-instance 1
member gi0/10/0 service-instance 1
```

In the below example, we verify that the queue count involving NFT statistics Layer 2 protocol/STP does not increment at high rate while Layer 2 protocol hardware forwarding takes place:

```
Show platform hardware pp active  infrastructure pi nft statistics | sec
 L2
 1           L2 control/legacy                 6503
 5           STP Q                           402923           0
 6           L2 PROTOCOL Q                   111505           0
 28          L2PT DUP Q                      459466           0
```

Configuring IEEE 802.1Q Tunneling and Layer 2 Protocol Tunneling Using EFPs

Tunneling is a feature used by service providers whose networks carry traffic of multiple customers and who are required to maintain the VLAN and Layer 2 protocol configurations of each customer without impacting the traffic of other customers. The Cisco router uses EFPs to support QinQ and Layer 2 protocol tunneling.

802.1Q Tunneling (QinQ)

Service provider customers often have specific requirements for VLAN IDs and the number of VLANs to be supported. The VLAN ranges required by different customers in the same service-provider network might overlap, and traffic of customers through the infrastructure might be mixed. Assigning a unique range of VLAN IDs to each customer would restrict customer configurations and could easily exceed the VLAN limit (4096) of the 802.1Q specification.

Using the EVCs, service providers can encapsulate packets that enter the service-provider network with multiple customer VLAN IDs (C-VLANs) and a single 0x8100 Ethertype VLAN tag with a service provider VLAN (S-VLAN). Within the service provider network, packets are switched based on the S-VLAN. When the packets egress the service provider network onto the customer network, the S-VLAN tag is decapsulated and the original customer packet is restored.

Figure below shows the tag structures of the double-tagged packets.

In figure below, Customer A was assigned VLAN 30, and Customer B was assigned VLAN 40. Packets entering the edge switches with 802.1Q tags are double-tagged when they enter the service-provider network, with the outer tag containing VLAN ID 30 or 40, appropriately, and the inner tag containing the original VLAN number, for example, VLAN 100. Even if both Customers A and B have VLAN 100 in their networks, the traffic remains segregated within the service-provider network because the outer tag is different. Each

customer controls its own VLAN numbering space, which is independent of the VLAN numbering space used by other customers and the VLAN numbering space used by the service-provider network. At the outbound port, the original VLAN numbers on the customer's network are recovered.

Method 1

In this example, for Customer A, interface is the customer-facing port, and is a trunk port facing the service provider network. For Customer B, is the customer-facing port, and is the trunk port facing the service provider network.

Customer A

For Customer A, service instance 1 on is configured with the VLAN encapsulations used by the customer: C-VLANs 1–100. These are forwarded on bridge-domain 4000. The service provider facing port is configured with a service instance on the same bridge-domain and with an **encapsulation dot1q** command matching the S-VLAN. The **rewrite ingress pop 1 symmetric** command also implies a push of the configured encapsulation on egress packets. Therefore, the original packets with VLAN tags between 1 and 100 are encapsulated with another S-VLAN (VLAN 30) tag when exiting Gigabit Ethernet port 0/0/2.

Similarly, for double- tagged (S-VLAN = 30, C-VLAN = 1–100) packets coming from the provider network, the **rewrite ingress pop 1 symmetric** command causes the outer S-VLAN tag to be popped and the original C-VLAN tagged frame to be forwarded over bridge-domain 4000 out to .

The same scenario applies to Customer B.

Customer B

Method 2

QinQ is also supported when sending packets between an EFP and a trunk EFP. The same external behavior as Method 1 can be achieved with this configuration:

Customer A

Again, service instance 1 on is configured with the VLAN encapsulations used by the customer. These are forwarded on bridge-domain 30. The service provider facing port is configured as a trunk port. The trunk port pushes a tag matching the bridge-domain that the packet is forwarded on (in this case S-VLAN 30).

For double tagged (S-VLAN = 30, C-VLAN = 1 to 100) packets coming in from the provider network, the trunk port pops the outer S-VLAN (30) and forwards the packet on that bridge-domain.

Customer B

You can also combine the customer A and B configurations, as follows:

Customer A and B

For information about the effect on cost of service (CoS) for different EFT tagging operations, see the .

Example for VLAN Translation Configurations

- For 1-to-1 VLAN translation (EFP to EFP), ingress port configuration:

```
Router (config)#
Router (config-if)# service instance 10 Ethernet
Router (config-if-srv)# encapsulation dot1q 10
```

```
Router (config-if-srv)# rewrite ingress tag pop 1 symmetric
Router (config-if-srv)# bridge-domain 10
```

You must apply the QoS policy in case of ingress EVC with the **rewrite push** option.

```
Router (config)#
Router (config-if)# service instance 1 Ethernet
Router (config-if-srv)# encapsulation untagged
Router (config-if-srv)# rewrite ingress tag push dot1q 10
Router (config-if-srv)# service policy input policy-dscp
Router (config-if-srv)# bridge-domain 20
```

Egress port configuration:

```
Router (config)# )#
Router (config-if)# service instance 10 Ethernet
Router (config-if-srv)# encapsulation dot1q 20
Router (config-if-srv)# rewrite ingress tag pop 1 symmetric
Router (config-if-srv)# bridge-domain 10
```

Egress interface with EVC pop and EVC policy:

```
Router (config)# )#
Router (config-if)# service instance 1 Ethernet
Router (config-if-srv)# encapsulation dot1q 30
Router (config-if-srv)# rewrite ingress tag pop 1 symmetric
Router (config-if-srv)# service policy output policy-dscp
Router (config-if-srv)# bridge-domain 20
```

In the above example, is the output interface and is the input interface. If you want to apply the EVC policy in the output direction on , ensure that you apply the same criteria for the input policy for the incoming traffic on .

- For 1-to-2 VLAN translation (EFP to EFP), ingress port configuration:

```
Router (config)#
Router (config-if)# service instance 10 Ethernet
Router (config-if-srv)# encapsulation dot1q 10
Router (config-if-srv)# rewrite ingress tag pop 1 symmetric
Router (config-if-srv)# bridge-domain 10
```

Egress port configuration:

```
Router (config)#
Router (config-if)# service instance 10 Ethernet
Router (config-if-srv)# encapsulation dot1q 20 second dot1q 30
Router (config-if-srv)# rewrite ingress tag pop 2 symmetric
Router (config-if-srv)# bridge-domain 10
```

- For 2-to-1 VLAN translation (EFP to EFP), ingress port configuration:

```
Router (config)#
Router (config-if)# service instance 10 Ethernet
Router (config-if-srv)# encapsulation dot1q 10 second-dot1q 20
Router (config-if-srv)# rewrite ingress tag pop 2 symmetric
Router (config-if-srv)# bridge-domain 10
```

Egress port configuration:

```
Router (config)#
```

```
Router (config-if)# service instance 10 Ethernet
Router (config-if-srv)# encapsulation dot1q 30
Router (config-if-srv)# rewrite ingress tag pop 1 symmetric
Router (config-if-srv)# bridge-domain 10
```

- For 2-to-2 VLAN translation (EFP to EFP), ingress port configuration:

```
Router (config)#
Router (config-if)# service instance 10 Ethernet
Router (config-if-srv)# encapsulation dot1q 10 second-dot1q 20
Router (config-if-srv)# rewrite ingress tag pop 2 symmetric
Router (config-if-srv)# bridge-domain 10
```

Egress port configuration:

```
Router (config)#
Router (config-if)# service instance 10 Ethernet
Router (config-if-srv)# encapsulation dot1q 30 second-dot1q 40
Router (config-if-srv)# rewrite ingress tag pop 2 symmetric
Router (config-if-srv)# bridge-domain 10
```

Example for Ingress Mapping of C-CoS to S-CoS

S-CoS is marked with the S-CoS value when the packet is matched with the C-CoS value at ingress. In the following example, is the ingress interface and is the egress interface. This classification is done at the ingress interface and the S-CoS value is set at 4.

```
   policy-map policy-dscp
   class class-dscp/customer-cos
   set cos 4

interface -> Input interface with EVC Push and policy on EVC
service instance 1 ethernet
 encapsulation untagged
 rewrite ingress tag push dot1q 10
 service-policy input policy-dscp
 bridge-domain 20


interface
service instance 1 ethernet
 encapsulation dot1q 30
 bridge-domain 20
```

Example for Ingress Mapping of C-CoS to C-CoS

In the following example, both C-CoS and S-CoS are configured with CoS=4. The example also illustrates the ingress mapping of C-DSCP or C-CoS to C-CoS, where CoS is marked for both S-CoS and C-CoS.

```
policy-map policy-dscp
class class-dscp/customer-cos
set cos 4          -> This sets the value of S-CoS.

interface GigabitEthernet0/1    ->Input interface with EVC Push and EVC policy
service instance 1 ethernet
 encapsulation untagged
 rewrite ingress tag push dot1q 10
 service-policy input policy-dscp
```

```
 bridge-domain 20


interface GigabitEthernet0/3
service instance 1 ethernet
 encapsulation dot1q 30
 rewrite ingress tag pop1 symmetric
 bridge-domain 20
```

Example for Egress Classification Based on CoS

```
interface GigabitEthernet0/1   -> Input interface with EVC Push and EVC policy
service instance 1 ethernet
 encapsulation untagged
 rewrite ingress tag push dot1q 10
 service-policy input set-cos
 bridge-domain 20

interface GigabitEthernet0/3
service instance 1 ethernet
 encapsulation dot1q 30
 service-policy output policy-dscp
 bridge-domain 20
```

Layer 2 Protocol Tunneling

Customers at different sites connected across a service-provider network need to use various Layer 2 protocols to scale their topologies to include all remote sites, as well as the local sites. STP must run properly, and every VLAN should build a proper spanning tree that includes the local site and all remote sites across the service-provider network. Cisco Discovery Protocol (CDP) must discover neighboring Cisco devices from local and remote sites.

VLAN Trunking Protocol (VTP) must provide consistent VLAN configuration throughout all sites in the customer network that are participating in VTP. Similarly, DTP, LACP, LLDP, PAgP, and UDLD can also run across the service-provider network.

When protocol tunneling is enabled, edge switches on the inbound side of the service-provider network encapsulate Layer 2 protocol packets with a special MAC address (0100.0CCD.CDD0) and send them across the service-provider network. Core switches in the network do not process these packets but forward them as normal (unknown multicast data) packets. Layer 2 protocol data units (PDUs) for the configured protocols cross the service-provider network and are delivered to customer switches on the outbound side of the service-provider network. Identical packets are received by all customer ports on the same VLANs with these results:

- Users on each of a customer's sites can properly run STP, and every VLAN can build a correct spanning tree based on parameters from all sites and not just from the local site.
- CDP discovers and shows information about the other Cisco devices connected through the service-provider network.
- VTP provides consistent VLAN configuration throughout the customer network, propagating to all switches through the service provider that support VTP.

Customers use Layer 2 protocol tunneling to tunnel BPDUs through a service-provider network without interfering with internal provider network BPDUs.

Note Layer 2 protocol tunneling is supported on EFPs, but not on switchports. Layer 2 protocol tunneling is not supported on cross-connect EFPs.

In figure below, Customer X has four switches in the same VLAN, which are connected through the service-provider network. If the network does not tunnel PDUs, switches on the far ends of the network cannot properly run STP, CDP, and other Layer 2 protocols. For example, STP for a VLAN on a switch in Customer X, Site 1, will build a spanning tree on the switches at that site without considering convergence parameters based on Customer X's switch in Site 2. This could result in the topology shown in figure below.

Figure 7: Layer 2 Protocol Tunneling

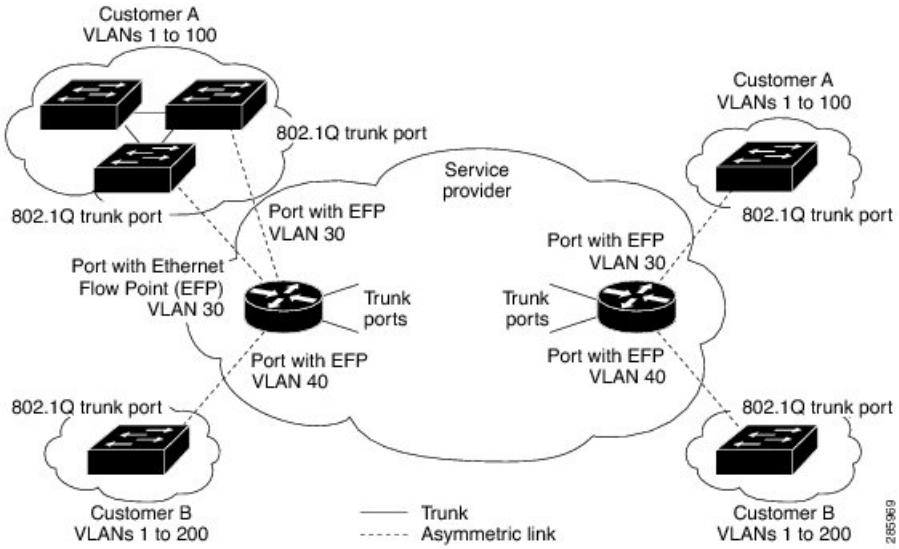

Figure 8: Layer 2 Network Topology without Proper Convergence

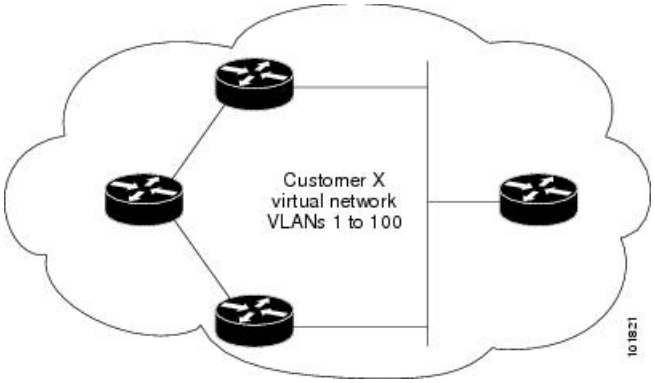

In a service-provider network, you can use Layer 2 protocol tunneling to enhance the creation of EtherChannels by emulating a point-to-point network topology. When you enable protocol tunneling (PAgP or LACP) on the service-provider switch, remote customer switches receive the PDUs and can negotiate the automatic creation of EtherChannels.

For example, in figure below, Customer A has two switches in the same VLAN that are connected through the SP network. When the network tunnels PDUs, switches on the far ends of the network can negotiate the automatic creation of EtherChannels without needing dedicated lines.

Figure 9: Layer 2 Protocol Tunneling for EtherChannels

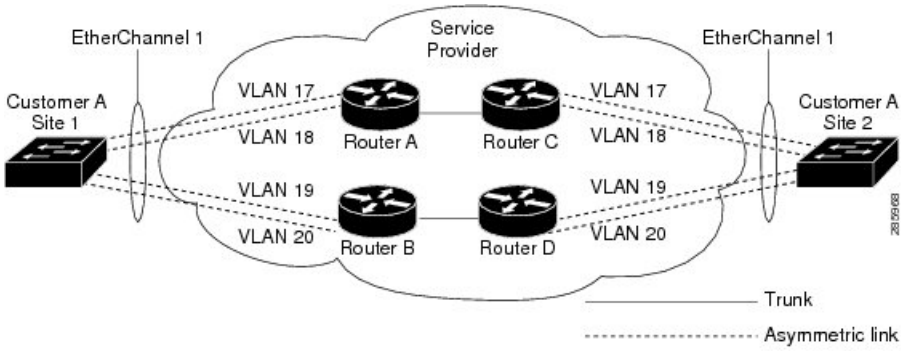

Use the **l2protocol tunnel** *protocol* service-instance configuration command to enable Layer 2 protocol tunneling on a service instance:

Valid protocols include CDP, LACP, LLDP, PAgP, STP, UDLD, and VTP. If a protocol is not specified for a service instance, the protocol frame is dropped at the interface.

This is an example of Layer 2 protocol tunneling configuration:

```
Router (config)# interface gigabitethernet0/0/2
Router (config-if)# service instance 10 Ethernet
Router (config-if-srv)# encapsulation untagged, dot1q 200 second-dot1q 300
Router (config-if-srv)# l2protocol tunnel cdp stp vtp dtp pagp lacp
Router (config-if-srv)# bridge-domain 10
```

Note To enable tunneling of most Layer 2 protocol, you must configure **encapsulation untagged** because Layer 2 protocol PDUs are usually untagged.

Layer 2 protocol tunneling statistics

The following command is used to view the Layer 2 protocol tunneling statistics:

show ethernet service instance id *service-instance id*interface *interface* platform.

This is an example of Layer 2 protocol tunneling statistics:

```
2020#sh run int gi0/0/9
Building configuration...

Current configuration : 228 bytes
interface GigabitEthernet0/0/9
 no ip address
 media-type auto-select
 negotiation auto
 no keepalive
 service instance 200 ethernet
  encapsulation untagged
  l2protocol tunnel
  xconnect 10.0.0.2 1 encapsulation mpls
```

```
end


2020#show ethernet service instance id 200 inter gig 0/0/9 platform

Service Instance (EFP) L2 PDU Handing Info

EFP                CDP   STP   VTP   DTP   PAGP  LLDP  LACP  UDLD  LOAM  ESMC  ELMI  PTPPD
 RES4  RES5  RES6  RES8  RES9  RESA  RESB  RESC  RESD  RESF  CFG  NH
-----------------------------------------------------------------------------------------------
Gi0/0/9.Efp200     TUNL  TUNL  TUNL  DROP  TUNL  TUNL  TUNL  TUNL  TUNL  TUNL  TUNL  TUNL
 TUNL  TUNL  TUNL  TUNL  TUNL  TUNL  TUNL  TUNL  TUNL  TUNL  Y    N

EFP L2PT Tunnel statistics
----------------------------------------
L2protocol         Encapped      Decapped
----------------------------------------
CDP:               0             0
STP:               4059          13661
VTP:               0             0
DTP:               0             0
PAGP:              0             0
LLDP:              0             0
LACP:              0             0
UDLD:              0             0
LOAM:              0             0
ESMC:              0             0
ELMI:              0             0
PTPPD:             0             0
```

Note Layer 2 Protocol Tunnel decap statistics increments on core port for Layer 2 Protocol Tunnel over BD/VPLS scenario and Layer 2 Protocol Tunnel.

EFPs and Ethernet over Multiprotocol Layer Switching (EoMPLS)

When you configure a pseudowire under a VLAN interface (for example, VLAN 33), the pseudowire becomes a virtual Layer 2 port in that VLAN (VLAN 33), or bridge domain. In this bridge domain, you can configure other types of Layer 2 ports, such as EFP portss. Switching functionalities, such as MAC address learning, flooding, and forwarding to learned MAC addresses, apply to all the Layer 2 ports, including the pseudowire.

Note When a pseudowire is present in the same bridge domain as an EFP, you cannot configure the EFP with the **rewrite ingress tag pop 2 symmetric** service instance configuration command. Other restrictions about switching between EFPs or between EFPs also still apply.

For more information about configuring pseudowire, see the Cisco NCS 4200 Series Software Configuration Guide.

Bridge Domain Routing

The switch supports IP routing and multicast routing for bridge domains, including Layer 3 and Layer 2 VPNs, using the BDI model. There are the limitations:

- You must configure BDIs for bridge-domain routing.

- The bridge domain must be in the range of 1 to 4094 to match the supported VLAN range.
- You can use bridge domain routing with only native packets.

This is an example of configuring bridge-domain routing with a single tag EFP:

```
Router (config)# interface gigabitethernet0/0/2
Router (config-if)# service instance 1 Ethernet
Router (config-if-srv)# encapsulation dot1q 10
Router (config-if-srv)# rewrite ingress tag pop 1 symmetric
Router (config-if-srv)# bridge-domain 100

Router (config)# interface bdi 100
Router (config-if)# ip address 20.1.1.1 255.255.255.255
```

This is an example of configuring bridge-domain routing with two tags:

```
Router (config)# interface gigabitethernet0/0/2
Router (config-if)# service instance 1 Ethernet
Router (config-if-srv)# encapsulation dot1q 10 second-dot1q 20
Router (config-if-srv)# rewrite ingress tag pop 2 symmetric
Router (config-if-srv)# bridge-domain 100

Router (config)# interface bdi 100
Router (config-if)# ip address 20.1.1.1 255.255.255.255
```

EFPs and Trunk Port MAC Addresses

Because forwarding can occur between EFPs and trunk ports, MAC address movement can occur on learned addresses. Addresses learned on EFPs will have the format of interface + EFP ID, for example gigabitethernet 0/0/1 + EFP 1. When an address moves between a non-secured EFP and a trunk port, the behavior is similar to that of moving between trunk ports.

To see MAC address information for bridge domains, use the **show mac-address-table bdomain** *domain* command.

When an EFP property changes (bridge domain, rewrite, encapsulation, split-horizon, secured or unsecured, or a state change), the old dynamic MAC addresses are flushed from their existing tables. This is to prevent old invalid entries from lingering.

EFPs and MSTP

EFP bridge domains are supported by the Multiple Spanning Tree Protocol (MSTP). These restrictions apply when running STP with bridge domains.

- EVC supports only MSTP.
- All incoming VLANs (outer-most or single) mapped to a bridge domain must belong to the same MST instance or loops could occur.
- For all EFPs that are mapped to the same MST instance, you must configure backup EFPs on every redundant path to prevent loss of connectivity due to STP blocking a port.

Layer 3 Unicast and Multicast Routing on a Bridge Domain with Multiple EFPs

Layer 3 unicast routing and Layer 3 multicast routing are supported on bridge domains with multiple EFPs. This feature provides the following functionality:

- Broadcast domains are determined through bridge-domains rather than VLANs
- Multiple EFPs on a single bridge domain and physical interface with Layer 3 multicast routing enabled is not supported in RSP3.
- Each EFP has its own match criteria and its own ingress and egress rewrite operations

Example for Configuring Layer 3 Multicast Routing on a Multi EFP Bridge Domain

Note Configuring Layer 3 Multicast Routing on a Multi EFP Bridge Domain is not supported on RSP3 module.

The following example shows how to configure Layer 3 multicast routing on a bridge domain using existing IOS commands.

```
ip routing
Ip multicast-routing distributed
!
!
interface bdi 100
    ip address 10.0.0.1 255.255.255.0
    ip pim sparse-mode
    Igmp version v3
!
interface GigabitEthernet0/1
 service instance 1 ethernet
  encapsulation dot1q 33
rewrite ingress tag pop 1 symmetric
bridge-domain 100
!
service instance 2 ethernet
  encapsulation dot1q 55
rewrite ingress tag pop 1 symmetric
   bridge-domain 100
```

Cross-Connect on EFP Interfaces

Cross-connect provides the ability to match the encapsulation of received packets on the ingress side of an EFP interface and send them out with the same encapsulation through the egress side of the EFP interface. Cross-connect bridge-domain entries are provided, and encapsulation matching is achieved by matching bridge-domain entries for the EFPs on which cross-connect is configured.

The following types of encapsulation tags are supported:

- untagged
- rewrite tags with pop1

Restrictions

- A bridge-domain cannot be configured on an EFP if cross-connect is already configured.
- Cross-connect works only when the MPLS license is enabled.
- Priority-tagged encapsulation is not supported.
- L2VPN VC statistics are not supported on the RSP3 module.

Note Configuring Layer 3 Multicast Routing on a Multi EFP Bridge Domain is not supported on both RSP3 and RSP2 modules.

Configuring Cross-Connect on an EFP Interface

Beginning in privileged EXEC mode, follow these steps to configure cross-Connect on an EFP Interface.

Procedure

Step 1 **configure terminal**

Enter global configuration mode.

Step 2 **interface** *interface-id*

Specify an interface to configure, and enter interface configuration mode.

Step 3 **service instance** *number* **ethernet** [*name*]

Configure an EFP (service instance) and enter service instance configuration) mode.

- The number is the EFP identifier, an integer from 1 to 4000.
- (Optional) **ethernet** name is the name of a previously configured EVC. You do not need to use an EVC name in a service instance.

Step 4 **encapsulation dot1q** *vlan_id* **cos** *cos_value* **second-dot1q** *vlan-id* **cos** *cos_value*

CoS value encapsulation defines match criterion after including the CoS for the S-Tag and the C-Tag. The CoS value is a single digit between 1 and 7 for S-Tag and C-Tag.

You cannot configure CoS encapsulation with **encapsulation** *untagged*. The result is an exact outermost VLAN and CoS match and second tag. You can also use VLAN ranges.

Step 5 **xconnect** *peer-router-id vcid* **pw-class** *pw-class name*

Bind the attachment circuit to a pseudowire virtual circuit (VC) and enter xconnect configuration mode.

Step 6 **end**

Return to privileged EXEC mode.

This is an example configuration of cross-connect on an EFP interface:

```
interface gigabitethernet 0/0/3
 service instance 30 ethernet
 encap dot1q x second dot1q y
 xconnect <10.10.10.10> 123 encapsulation mpls
```

MAC Address Forwarding, Learning and Aging on EFPs

- Layer 2 forwarding is based on the bridge domain ID and the destination MAC address. The frame is forwarded to an EFP if the binding between the bridge domain, destination MAC address, and EFP is known. Otherwise, the frame is flooded to all the EFPs or ports in the bridge domain.
- MAC address learning is based on bridge domain ID, source MAC addresses, and logical port number. MAC addresses are managed per bridge domain when the incoming packet is examined and matched against the EFPs configured on the interface. If there is no EFP configured, the bridge domain ID equal to the outer-most VLAN tag is used as forwarding and learning look-up key.

  If there is no matching entry in the Layer 2 forwarding table for the ingress frame, the frame is flooded to all the ports within the bridge domain. Flooding within the bridge domain occurs for unknown unicast, unknown multicast, and broadcast.
- Dynamic addresses are addresses learned from the source MAC address when the frame enters the router. All unknown source MAC addresses are sent to the CPU along with ingress logical port number and bridge domain ID for learning. Once the MAC address is learned, the subsequent frame with the destination MAC address is forwarded to the learned port. When a MAC address moves to a different port, the Layer 2 forwarding entry is updated with the corresponding port.

Note The Cisco router does not currently support the **no mac address-table** learning bridge-domain *bridge-id* global configuration command.

- Dynamic addresses are aged out if there is no frame from the host with the MAC address. If the aged-out frame is received by the switch, it is flooded to the EFPs in the bridge domain and the Layer 2 forwarding entry is created again. The default for aging dynamic addresses is 5 minutes. However, when MST undergoes a topology change, the aging time is reduced to the *forward-delay* time configured by the spanning tree. The aging time reverts back to the last configured value when the topology change expires.

  You can configure a dynamic address aging time per bridge domain using the **mac aging-time** *time* command. The range is in seconds and valid values are 120-360. The default value is 300. An aging time of 0 means that the address aging is disabled.
- MAC address movement is detected when the host moves from one port to another. If a host moves to another port or EFP, the learning lookup for the installed entry fails because the ingress logical port number does not match and a new learning cache entry is created. The detection of MAC address movement is disabled for static MAC addresses where the forwarding behavior is configured by the user.

Configuring a Static MAC Address

This section describes how to configure a static MAC address. For an overview of static MAC addresses, see Static MAC Addresses.

Limitations

The following limitations apply when configuring static MAC addresses:

- Static MAC addresses are supported only on egress ports.

- You can configure up to 1024 multicast static MAC addresses.
- You can assign up to 24 EFPs to a bridge domain configured with a multicast static MAC address.
- MAC entries configured across different bridge-domains are represented as separate entries in the router MAC table.
- Multicast static MAC addresses apply only to layer 2 traffic; layer 3 multicast traffic is not affected by a static MAC configuration and is forwarded to all EFPs in a bridge domain.

Configuring a Multicast Static MAC Address

Procedure

Step 1 **configure terminal**

Enter global configuration mode.

Example:

```
Router# configure terminal
```

Step 2 **interface** *interface-id*

Specify the port to attach to the policy map, and enter interface configuration mode. Valid interfaces are physical ports.

Example:

```
Router(config)# interface gigabitethernet 0/3/6
```

Step 3 **service instance** *number* **ethernet** [*name*]

Configure an EFP (service instance) and enter service instance configuration) mode.

- The number is the EFP identifier, an integer from 1 to 4000.
- (Optional) **ethernet** name is the name of a previously configured EVC. You do not need to use an EVC name in a service instance.

Example:

```
Rotuer(config)# service instance 1 ethernet
```

Step 4 **encapsulation** {**default** | **dot1q** | **priority-tagged** | **untagged**}

Configure encapsulation type for the service instance.

- **default**—Configure to match all unmatched packets.
- **dot1q**—Configure 802.1Q encapsulation. See Table 15: Supported Encapsulation Types for details about options for this keyword.
- **priority-tagged**—Specify priority-tagged frames, VLAN-ID 0 and CoS value of 0 to 7.
- **untagged**—Map to untagged VLANs. Only one EFP per port can have untagged encapsulation.

Example:

```
Router(config-if-srv)# encapsulation dot1q 1
```

Step 5 **bridge-domain** *bridge-id* [**split-horizon group** *group-id*]

Configure the bridge domain ID. The range is from 1 to 4000.

You can use the **split-horizon** keyword to configure the port as a member of a split horizon group. The *group-id* range is from 0 to 2.

Example:

```
Router(config-if-srv)# bridge-domain 1
```

Step 6 **mac static address** *address*

Example:

```
Router(config-if-srv)# mac static address 1302.4302.23c3
```

Specifies the multicast MAC address.

Step 7 **end**

Example:

```
Router(config-if-srv)# end
```

Return to privileged EXEC mode.

Configuration Example

This is an example configuration of a static MAC address on an EFP interface:

```
interface gigabitEthernet 0/0/3
 service instance 10 ethernet
 encapsulation dot1q 10
 bridge-domain 100
 mac static address 1302.4302.23c3
```

This configuration specifies that any layer 2 traffic sent to destination MAC address 1302.4302.23c3 is forwarded only to service instance 10 of bridge-domain interface Gigabit Ethernet 0/0/3.

To disable a static MAC configuration, apply the **mac static address** *address* command to the service instance:

```
Router (config)# interface gigabitethernet0/0/1
Router (config-if)# service instance 1 Ethernet
Router (config-if-srv)# mac static address 1302.4302.23c3
```

Monitoring EVC

Table 21: Supported show Commands

	Description
show ethernet service evc [**id** *evc-id* | **interface** *interface-id*] [**detail**]	Displays information about all EVCs, or a specific EVC when you enter an EVC ID, or all EVCs on an interface when you enter an interface ID. The **detail** option provides additional information about the EVC.

	Description
show ethernet service instance [**id** *instance-id* **interface** *interface-id* | **interface** *interface-id*] {[**detail**] | [*stats*]}	Displays information about one or more service instance (EFPs). If you specify an EFP ID and interface, only data pertaining to that particular EFP is displayed. If you specify only an interface ID, data is displayed for all EFPs on the interface.
show bridge-domain [*n*]	When you enter *n*, this command displays all the members of the specified bridge-domain, if a bridge-domain with the specified number exists. If you do not enter *n*, the command displays all the members of all bridge-domains in the system.
show bridge-domain *n* **split-horizon** [**group** {*group_id* | **all**}]	When you do not specify a **group** *group_id*, this command displays all the members of bridge-domain *n* that belong to split horizon group 0. If you specify a numerical *group_id*, this command displays all the members of the specified group id. When you enter **group all**, the command displays all members of any split horizon group.

show ethernet service instance detail	This command displays detailed service instance information, including Layer 2 protocol information. This is an example of the output:
	`Router# show ethernet service instance detail`
	`Service Instance ID: 1`
	`Associated Interface: Ethernet0/0`
	`Associated EVC:`
	`L2protocol tunnel pagp`
	`CE-Vlans:`
	`State: Up`
	`EFP Statistics:`
	`Pkts In Bytes In Pkts Out Bytes Out`
	`0 0 0 0`

show mac address-table	This command displays dynamically learned or statically configured MAC security addresses. **Note** Software configured MAC address table may not always be in sync with the Hardware MAC address table.
show mac address-table bridge-domain *bridge-domain id*	This command displays MAC address table information for the specified bridge domain.
show mac address-table count bridge-domain *bridge-domain id*	This command displays the number of addresses present for the specified bridge domain. This includes both software and hardware addresses present on the system.
show mac address-table learning bridge-domain *bridge-domain id*	This command displays the learning status for the specified bridge domain.

This is an example of output from the **show ethernet service instance detail** command:

```
Router#
Service Instance ID: 1
```

```
Associated Interface:
Associated EVC: EVC_P2P_10
L2protocol drop
CE-Vlans:
Encapsulation: dot1q 10 vlan protocol type 0x8100
Interface Dot1q Tunnel Ethertype: 0x8100
State: Up
EFP Statistics:
   Pkts In   Bytes In   Pkts Out  Bytes Out
       214      15408      97150    6994800
EFP Microblocks:
****************
Microblock type: Bridge-domain
Bridge-domain: 10
```

This is an example of output from the **show bridge-domain** command:

```
Router# show bridge-domain 100
Bridge-domain 100 (1 ports in all)
State: UP Mac learning: Enabled
Aging-Timer: 300 second(s)
Maximum address limit: 256000
GigabitEthernet0/0/0 service instance 1

Nile Mac Address Entries

BD mac addr type ports
-------------------------------------------------------------------------------------------
100 0000.bbbb.cccc STATIC Gi0/0/0.Efp1

sh mac-address-table bdomain 100

Nile Mac Address Entries

BD mac addr type ports
-------------------------------------------------------------------------------------------
100 0000.bbbb.cccc STATIC Gi0/0/0.Efp1
```

This is an example of output from the **show ethernet service instance** statistics command:

```
Router#
Service Instance 1, Interface
Pkts In   Bytes In   Pkts Out  Bytes Out
       214      15408      97150    6994800
```

This is an example of output from the **show mac-address table count** command:

```
Router# show mac address-table count bdomain 10

Mac Entries for BD   10:
---------------------------
Dynamic Address Count  : 20
Static  Address Count  : 0
Total Mac Addresses    : 20
```

CHAPTER 13

EVC Local Connect

Local connect (Layer 2 point to point service) is a point to point connection. It transparently transmits packet between two service instances which are configured on the same box. Local connect only connects two end points (service instances) without learning any Mac addresses. This is different from the traditional L2 bridging.

Note Packet is not forwarded based on MAC addresses.

Information About EVC Local Connect

Benefits of EVC Local Connect

- L2CP forwarding using hardware is enabled by **mac-address-table evc-xconnect l2pt-forward-all** command. This ensures transparent control frames forwarding and avoid certain frames getting dropped by CPU.

Prerequisites for EVC Local Connect

- Ensure EFPs are configured without any Bridge-Domain or Xconnect mapped to it.

Restrictions for EVC Local Connect

- EVC local connect is not supported on port-channel interfaces.
- CFM is *not* supported on EVC which contains local connect.
- L2 Protocol Tunnel are *not* supported.
- Ethernet Loopback is *not* supported.
- EVC local connect over Trunk is *not* supported.
- Port based local connect is *not* supported.
- Egress filtering based on encapulation, vlan translation, terminal and facility loopback are *not* supported
- Local Connect members without service instances will *not* work.
- On point-point connection storm control should not be applied. However, with local connect, broadcast storm control gets applied.
- For IP multicast, IGMP and PIM control packets get punted to CPU and then re-injected into the hardware path. The same thing applies to DHCP control packets too.
- Starting with Cisco IOS XE Release 17.8.1, local connect discerption is observed after you downgrade from the current release to XE 17.6.1 and the router reverts back to the latest version. This behavior is observed with Cisco RSP2 module.

Scaling

- With the 8k SDM template enabled, there can be 4000 local connects configured. This total EFP scale can be divided among cross-connect and local- connect and there is no fixed limit on the division numbers.
- Local Connect does not share Internal Bridge-Domain space with L2VPN.
- Local Connect is scaled by half of total EFP scale. EFP scale is 8000 on RSP3-400 and 4000 on RSP3-200 modules.

How to Configure EVC Local Connect

Configuring EVC Local Connect

Before You Begin

Ensure that service instances are configured with proper encapsulations and rewrites as needed.

Procedure

Follow this procedure to establish an EVC local connection:

Configuring Service Instance 1

```
enable
configure terminal
interface GigbitEthernet0/1/6
service instance 1 ethernet
encapsulation dot1q 2
end
```

Configuring Service Instance 2

```
enable
configure terminal
interface GigabitEthernet0/1/7
service instance 2 ethernet
encapsulation dot1q 2
end
```

EVC Local Connect for Service Instances 1 and 2

```
enable
configure terminal
l2vpn xconnect context efp2
member GigabitEthernet0/1/6 service-instance 1
member GigabitEthernet0/1/7 service-instance 2
no shut
end
```

Configuring EVC Local Connect as Interworking VLAN

Interworking VLAN is configured in the **l2vpn xconnect** command for local connect, if the local connect both member EFPs has different encapsulation types as default or untagged or vlan range. Follow this procedure to configure EVC local connect using internetworking VLAN.

Before You Begin

Ensure that service instances are configured with proper encapsulations and rewrites as needed.

Procedure

```
enable
configure terminal
l2vpn xconnect context connect1
member GigbitEthernet0/3/4 service-instance 1
member GigbitEthernet0/3/7 service-instance 1
interworking vlan
end
```

Verifying EVC Local Connect Configuration

Verifying EVC Local Connect Configuration

```
show l2vpn service xconnect name efp2

Legend: St=State    XC St=State in the L2VPN Service      Prio=Priority
        UP=Up       DN=Down            AD=Admin Down      IA=Inactive
        SB=Standby  HS=Hot Standby     RV=Recovering      NH=No Hardware
        m=manually selected
```

```
  Interface          Group       Encapsulation                   Prio  St  XC St
  ---------                 -----            ----
--  -----
VPWS name: efp2, State: UP
  Gi0/1/6                        Gi0/1/6:2(Eth VLAN)             0     UP  UP
  Gi0/1/7                        Gi0/1/7:2(Eth VLAN)             0     UP  UP
```

Verifying not Configured EVC Local Connect

```
show l2vpn service xconnect name efp2

Legend: St=State    XC St=State in the L2VPN Service      Prio=Priority
        UP=Up       DN=Down            AD=Admin Down      IA=Inactive
        SB=Standby  HS=Hot Standby     RV=Recovering      NH=No Hardware
        m=manually selected

  Interface          Group       Encapsulation                   Prio  St  XC St
  ---------          -----       -------------                   ----  --  -----
Xconnect entry does not exist
```

Verifying EVC Local Connect with Interworking VLAN

```
show l2vpn service name test1

Legend: St=State    XC St=State in the L2VPN Service      Prio=Priority
        UP=Up       DN=Down            AD=Admin Down      IA=Inactive
        SB=Standby  HS=Hot Standby     RV=Recovering      NH=No Hardware
        m=manually selected

  Interface          Group       Encapsulation                   Prio  St  XC St
  ---------          -----       -------------                   ----  --  -----
VPWS name: test1, State: UP
  Gi0/1/6                        Gi0/1/6:1(Ethernet)             0     UP  UP
  Gi0/1/7                        Gi0/1/7:10(Eth VLAN)            0     UP  UP
```

Verifying Traffic Statistics

```
show interface gig0/1/6 | in pack

  30 second input rate 43604000 bits/sec, 43955 packets/sec
  30 second output rate 0 bits/sec, 0 packets/sec
     1521946 packets input, 188721304 bytes, 0 no buffer
     0 packets output, 0 bytes, 0 underruns

show interface gig0/1/7 | in pack

  30 second input rate 0 bits/sec, 0 packets/sec
  30 second output rate 43131000 bits/sec, 43482 packets/sec
     0 packets input, 0 bytes, 0 no buffer
     1523724 packets output, 188941776 bytes, 0 underruns

show ethernet service instance id 1 interface gig0/1/6 stats

Port maximum number of service instances: 4000
Service Instance 1, Interface GigabitEthernet0/1/6
   Pkts In   Bytes In   Pkts Out  Bytes Out
   1300224  161227776          0          0


show ethernet service instance id 2 interface gig0/1/7 stats

Port maximum number of service instances: 4000
```

```
Service Instance 2, Interface GigabitEthernet0/1/7
   Pkts In   Bytes In   Pkts Out  Bytes Out
         0          0    1300226  161228024
```

Configuration Examples

Example: Configuration Example for EVC Local Connect

Example: Configuration Example for EVC Local Connect

```
show run interface GigabitEthernet0/1/6

Building configuration...

Current configuration : 142 bytes
!
interface GigabitEthernet0/1/6
 no ip address
 negotiation auto
 no keepalive
 service instance 1 ethernet
  encapsulation dot1q 10
 !
end
```

```
show run interface GigabitEthernet0/1/7

Building configuration...

Current configuration : 142 bytes
!
interface GigabitEthernet0/1/7
 no ip address
 negotiation auto
 no keepalive
 service instance 1 ethernet
  encapsulation dot1q 10
 !
end
```

```
show run | sec localconnect1

l2vpn xconnect context localconnect1
member GigabitEthernet0/1/6 service-instance 1
member GigabitEthernet0/1/7 service-instance 1
```

Example: Configuration Example for EVC Local Connect as Interworking VLAN

Example: Configuration Example for EVC Local Connect as Interworking VLAN

```
show run interface GigabitEthernet0/3/4

Building configuration...
```

```
Current configuration : 165 bytes
!
interface GigabitEthernet0/3/4
no ip address
negotiation auto
service instance 1 ethernet
  encapsulation dot1q 1
!
end
```

```
show run interface GigabitEthernet0/3/7

Building configuration...

Current configuration : 127 bytes
!
interface GigabitEthernet0/3/7
no ip address
negotiation auto
service instance 1 ethernet
  encapsulation default
!
end
```

```
show run | sec localconnect2

l2vpn xconnect context localconnect2
interworking vlan
member GigabitEthernet0/3/4 service-instance 1
member GigabitEthernet0/3/7 service-instance 1
```

Use Cases or Deployment Scenarios

Ingress is VLAN list and Egress is fixed VLAN

If you have the configuration where, Ingress has encapsulations as a list of VLAN and Egress is a fixed VLAN. You need to configure interworking VLAN in **l2vpn xconnect** command to enable local connect and the state of the connection to be UP.

A notification is displayed when you have not configured interworking VLAN.

The following configuration describes the scenario:

```
enable
configure terminal
interface GigabitEthernet0/1/6
service instance 1 ethernet
encapsulation dot1q 2,4,5-8,10
end

enable
configure terminal
interface GigabitEthernet0/1/7
service instance 2 ethernet
encapsulation dot1q 5
end

enable
configure terminal
l2vpn xconnect context efp2
member gigabitEthernet 0/1/6 service-instance 1
```

```
member gigabitEthernet 0/1/7 service-instance 2
no shut
end

% Incomplete xconnect configuration. Please configure interworking.
```

You can verify the configuration using the **show l2vpn service xconnect name name**

```
show l2vpn service xconnect name efp2

Legend: St=State    XC St=State in the L2VPN Service      Prio=Priority
        UP=Up       DN=Down            AD=Admin Down      IA=Inactive
        SB=Standby  HS=Hot Standby     RV=Recovering      NH=No Hardware
        m=manually selected

  Interface          Group       Encapsulation                    Prio  St  XC St
  ---------                    -----       -------------                    ----  --  -----
VPWS name: efp2, State: UP
  Gi0/1/6                        Gi0/1/6:1(Ethernet)              0     UP  UP
  Gi0/1/7                        Gi0/1/7:5(Eth VLAN)              0     UP  UP
```

Additional References for EVC Local Connect

Related Documents

Related Topic	Document Title
Cisco IOS commands	Cisco IOS Master Commands List, All Releases

Standards and RFCs

Standard/RFC	Title
No specific Standards and RFCs are supported by the features in this document.	—

MIBs

MIB	MIBs Link
—	To locate and download MIBs for selected platforms, Cisco IOS releases, and feature sets, use Cisco MIB Locator found at the following URL: http://www.cisco.com/go/mibs

Technical Assistance

Description	Link
The Cisco Support website provides extensive online resources, including documentation and tools for troubleshooting and resolving technical issues with Cisco products and technologies. To receive security and technical information about your products, you can subscribe to various services, such as the Product Alert Tool (accessed from Field Notices), the Cisco Technical Services Newsletter, and Really Simple Syndication (RSS) Feeds. Access to most tools on the Cisco Support website requires a Cisco.com user ID and password.	http://www.cisco.com/cisco/web/support/index.html

Feature Information for EVC Local Connect

The following table provides release information about the feature or features described in this module. This table lists only the software release that introduced support for a given feature in a given software release train. Unless noted otherwise, subsequent releases of that software release train also support that feature.

Use Cisco Feature Navigator to find information about platform support and Cisco software image support. To access Cisco Feature Navigator, go to https://cfnng.cisco.com/. An account on Cisco.com is not required.

Table 22: Feature Information for EVC Local Connect

Feature Name	Releases	Feature Information
EVC Local Connect	3.18	The EVC Local Connect

CHAPTER 14

Configuring Ethernet Local Management Interface at a Provider Edge

The advent of Ethernet as a metropolitan-area network (MAN) and WAN technology imposes a new set of Operation, Administration, and Management (OAM) requirements on Ethernet's traditional operations, which had centered on enterprise networks only. The expansion of Ethernet technology into the domain of service providers, where networks are substantially larger and more complex than enterprise networks and the user-base is wider, makes operational management of link uptime crucial. More importantly, the timeliness in isolating and responding to a failure becomes mandatory for normal day-to-day operations, and OAM translates directly to the competitiveness of the service provider.

The “Configuring Ethernet Local Management Interface at a Provide Edge” module provides general information about configuring an Ethernet Local Management Interface (LMI), an OAM protocol, on a provider edge (PE) device.

Prerequisites for Configuring Ethernet Local Management Interface at a Provider Edge

- Ethernet Operation, Administration, and Management (OAM) must be operational in the network.
- For Ethernet OAM to operate, the provider edge (PE) side of a connection must be running Ethernet Connectivity Fault Management (CFM) and Ethernet Local Management Interface (LMI).
- All VLANs used on a PE device to connect to a customer edge (CE) device must also be created on that CE device.
- To use nonstop forwarding (NSF) and In Service Software Upgrade (ISSU), stateful switchover (SSO) must be configured and working properly.

Restrictions for Configuring Ethernet Local Management Interface at a Provider Edge

- Ethernet Local Management Interface (LMI) is not supported on routed ports, EtherChannel port channels, ports that belong to an EtherChannel, private VLAN ports, IEEE 802.1Q tunnel ports, Ethernet over Multiprotocol Label Switching (MPLS) ports, or Ethernet Flow Points (EFPs) on trunk ports.
- Ethernet LMI cannot be configured on VLAN interfaces.
- The high availability (HA) features NSF/SSO—E-LMI Support and ISSU--E-LMI Support are not supported on a customer edge (CE) device.

Information About Configuring Ethernet Local Management Interface at a Provider Edge

Ethernet Virtual Circuits Overview

An Ethernet virtual circuit (EVC) as defined by the Metro Ethernet Forum is a port level point-to-point or multipoint-to-multipoint Layer 2 circuit. EVC status can be used by a customer edge (CE) device to find an alternative path in to the service provider network or in some cases to fall back to a backup path over Ethernet or another alternative service such as ATM.

Ethernet LMI Overview

Ethernet Local Management Interface (LMI) is an Ethernet Operation, Administration, and Management (OAM) protocol between a customer edge (CE) device and a provider edge (PE) device. Ethernet LMI provides CE devices with the status of Ethernet virtual circuits (EVCs) for large Ethernet metropolitan-area networks (MANs) and WANs and provides information that enables CE devices to autoconfigure. Specifically, Ethernet LMI runs on the PE-CE User-Network Interface (UNI) link and notifies a CE device of the operating state of an EVC and the time when an EVC is added or deleted. Ethernet LMI also communicates the attributes of an EVC.

Ethernet LMI interoperates with Ethernet Connectivity Fault Management (CFM), an OAM protocol that runs within the provider network to collect OAM status. Ethernet CFM runs at the provider maintenance level (user provider edge [UPE] to UPE at the UNI). Ethernet LMI relies on the OAM Ethernet Infrastructure (EI) to interwork with CFM to learn the end-to-end status of EVCs across CFM domains.

Ethernet LMI is disabled globally by default. When Ethernet LMI is enabled globally, all interfaces are automatically enabled. Ethernet LMI can also be enabled or disabled at the interface to override the global configuration. The last Ethernet LMI command issued is the command that has precedence. No EVCs, Ethernet service instances, or UNIs are defined, and the UNI bundling service is bundling with multiplexing.

Ethernet CFM Overview

Ethernet Connectivity Fault Management (CFM) is an end-to-end per-service-instance (per VLAN) Ethernet layer Operation, Administration, and Management (OAM) protocol that includes proactive connectivity monitoring, fault verification, and fault isolation. End-to-end CFM can be from provider edge (PE) device to PE device or from customer edge (CE) device to CE device. For more information about Ethernet CFM, see "Configuring Ethernet Connectivity Fault Management in a Service Provider Network" in the *Carrier Ethernet Configuration Guide*.

OAM Manager Overview

The OAM manager is an infrastructure element that streamlines interaction between Operation, Administration, and Management (OAM) protocols. The OAM manager requires two interworking OAM protocols, Ethernet Connectivity Fault Management (CFM) and Ethernet Local Management Interface (LMI). No interactions are required between Ethernet LMI and the OAM manager on the customer edge (CE) side. On the User Provider-Edge (UPE) side, the OAM manager defines an abstraction layer that relays data collected from Ethernet CFM to the Ethernet LMI device.

Ethernet LMI and the OAM manager interaction is unidirectional, from the OAM manager to Ethernet LMI on the UPE side of the device. An information exchange results from an Ethernet LMI request or is triggered by the OAM manager when it receives notification from the OAM protocol that the number of UNIs has changed. A change in the number of UNIs may cause a change in Ethernet virtual circuit (EVC) status.

The OAM manager calculates EVC status given the number of active user network interfaces (UNIs) and the total number of associated UNIs. You must configure CFM to notify the OAM manager of all changes to the number of active UNIs or to the remote UNI ID for a given service provider VLAN (S-VLAN) domain.

The information exchanged is as follows:

- EVC name and availability status (active, inactive, partially active, or not defined)
- Remote UNI name and status (up, disconnected, administratively down, excessive frame check sequence [FCS] failures, or not reachable)
- Remote UNI counts (the total number of expected UNIs and the number of active UNIs)

Benefits of Ethernet LMI at a Provider Edge

- Communication of end-to-end status of the Ethernet virtual circuit (EVC) to the customer edge (CE) device
- Communication of EVC and user network interface (UNI) attributes to a CE device
- Competitive advantage for service providers

HA Features Supported by Ethernet LMI

In access and service provider networks using Ethernet technology, high availability (HA) is a requirement, especially on Ethernet operations, administration, and management (OAM) components that manage Ethernet virtual circuit (EVC) connectivity. End-to-end connectivity status information is critical and must be maintained on a hot standby Route Processor (RP) (a standby RP that has the same software image as the active RP and

supports synchronization of line card, protocol, and application state information between RPs for supported features and protocols).

End-to-end connectivity status is maintained on the customer edge (CE), provider edge (PE), and access aggregation PE (uPE) network nodes based on information received by protocols such as Ethernet Local Management Interface (LMI), Connectivity Fault Managment (CFM), and 802.3ah. This status information is used to either stop traffic or switch to backup paths when an EVC is down.

Metro Ethernet clients (E-LMI, CFM, 802.3ah) maintain configuration data and dynamic data, which is learned through protocols. Every transaction involves either accessing or updating data in the various databases. If the database is synchronized across active and standby modules, the modules are transparent to clients.

The Cisco infrastructure provides component application programming interfaces (APIs) that are helpful in maintaining a hot standby RP. Metro Ethernet HA clients (E-LMI, HA/ISSU, CFM HA/ISSU, 802.3ah HA/ISSU) interact with these components, update the database, and trigger necessary events to other components.

Benefits of Ethernet LMI HA

- Elimination of network downtime for Cisco software image upgrades, resulting in higher availability.
- Elimination of resource scheduling challenges associated with planned outages and late night maintenance windows
- Accelerated deployment of new services and applications and faster implementation of new features, hardware, and fixes due to the elimination of network downtime during upgrades
- Reduced operating costs due to outages while the system delivers higher service levels due to the elimination of network downtime during upgrades

NSF SSO Support in Ethernet LMI

The redundancy configurations stateful switchover (SSO) and nonstop forwarding (NSF) are supported in Ethernet Local Management Interface (LMI) and are automatically enabled. A switchover from an active to a standby Route Processor (RP) or a standby Route Switch Processor (RSP) occurs when the active RP or RSP fails, is removed from the networking device, or is manually taken down for maintenance. The primary function of Cisco NSF is to continue forwarding IP packets following an RP or RSP switchover. NSF also interoperates with the SSO feature to minimize network downtime following a switchover.

For detailed information about the SSO and NSF features, see the *High Availability Configuration Guide*.

ISSU Support in Ethernet LMI

In Service Software Upgrade (ISSU) allows you to perform a Cisco software upgrade or downgrade without disrupting packet flow. Ethernet Local Management Interface (LMI) performs updates of the parameters within the Ethernet LMI database to the standby route processor (RP) or standby route switch processor (RSP). This checkpoint data requires ISSU capability to transform messages from one release to another. All the components that perform active processor to standby processor updates using messages require ISSU support. ISSU is automatically enabled in Ethernet LMI.

ISSU lowers the impact that planned maintenance activities have on network availability by allowing software changes while the system is in service. For detailed information about ISSU, see the *High Availability Configuration Guide*.

How to Configure Ethernet Local Management Interface at a Provider Edge

Configuring Ethernet LMI Interaction with CFM

For Ethernet Local Management Interface (LMI) to function with Connectivity Fault Management (CFM), you must configure Ethernet virtual circuits (EVCs), Ethernet service instances including untagged Ethernet flow points (EFPs), and Ethernet LMI customer VLAN mapping. Most of the configuration occurs on the provider edge (PE) device on the interfaces connected to the customer edge (CE) device. On the CE device, you need only enable Ethernet LMI on the connecting interface. Also, you must configure operations, administration, and management (OAM) parameters; for example, EVC definitions on PE devices on both sides of a metro network.

CFM and OAM interworking requires an inward facing Maintenance Entity Group End Point (MEP).

Configuring the OAM Manager

Note If you configure, change, or remove a user network interface (UNI) service type, Ethernet virtual circuit (EVC), Ethernet service instance, or customer edge (CE)-VLAN configuration, all configurations are checked to ensure that the configurations match (UNI service type with EVC or Ethernet service instance and CE-VLAN configuration). The configuration is rejected if the configurations do not match.

Perform this task to configure the OAM manager on a provider edge (PE) device.

Procedure

Step 1 **enable**

Example:

```
Device> enable
```

Enables privileged EXEC mode.

- Enter your password if prompted.

Step 2 **configure terminal**

Example:

```
Device# configure terminal
```

Enters global configuration mode.

Step 3 **ethernet cfm domain** *domain-name* **level** *level-id*

Example:

```
Device(config)# ethernet cfm domain cstmr1 level 3
```

Defines a Connectivity Fault Management (CFM) domain, sets the domain leve,l and enters Ethernet CFM configuration mode.

Step 4 **service** *csi-id* **evc** *evc-name* **vlan** *vlan-id*

Example:

```
Device(config-ecfm)# service csi2 evc evc_1 vlan 10
```

Defines a universally unique customer service instance (CSI) and VLAN ID within the maintenance domain, and enters Ethernet CFM service configuration mode.

Step 5 **continuity-check**

Example:

```
Device(config-ecfm-srv)# continuity-check
```

Enables the transmission of continuity check messages (CCMs).

Step 6 **continuity-check interval** *time*

Example:

```
Device(config-ecfm-srv)# continuity-check interval 1s/10s/1m/10m
```

Enables the transmission of continuity check messages (CCMs) at specific intervals.

Step 7 **exit**

Example:

```
Device(config-ecfm-srv)# exit
```

Returns to Ethernet CFM configuration mode.

Step 8 **exit**

Example:

```
Device(config-ecfm)# exit
```

Returns to global configuration mode.

Step 9 **ethernet evc** *evc-id*

Example:

```
Device(config)# ethernet evc 50
```

Defines an EVC and enters EVC configuration mode.

Step 10 **oam protocol** {**cfm domain** *domain-name* | **ldp**}

Example:

```
Device(config-evc)# oam protocol cfm domain cstmr1
```

Configures the Ethernet virtual circuit (EVC) operations, administration, and management (OAM) protocol as CFM for the CFM domain maintenance level as configured in Steps 3 and 4.

Note If the CFM domain does not exist, this command is rejected, and an error message is displayed.

Step 11 **uni count** *value* [**multipoint**]

Example:

```
Device(config-evc)# uni count 3
```

(Optional) Sets the User Network Interface (UNI) count for the EVC.

- If this command is not issued, the service defaults to a point-to-point service. If a value of 2 is entered, point-to-multipoint service becomes an option. If a value of 3 or greater is entered, the service is point-to-multipoint.

Note If you enter a number greater than the number of endpoints, the UNI status is partially active even if all endpoints are up. If you enter a UNI count less than the number of endpoints, status might be active, even if all endpoints are not up.

Step 12 **exit**

Example:

```
Device(config-evc)# exit
```

Returns to global configuration mode.

Step 13 Repeat Steps 3 through 12 to define other CFM domains that you want OAM manager to monitor.

Example:

–

Step 14 **interface** *type number*

Example:

```
Device(config)# interface gigabitethernet 0/0/2
```

Specifies a physical interface connected to the CE device and enters interface configuration mode.

Step 15 **service instance** *id* **ethernet** [*evc-id*]

Example:

```
Device(config-if)# service instance 400 ethernet 50
```

Configures an Ethernet service instance on the interface and enters Ethernet service configuration mode.

- The Ethernet service instance identifier is a per-interface service identifier and does not map to a VLAN.

Step 16 **ethernet lmi ce-vlan map** {*vlan-id* [**untagged**] | **any** | **default** | **untagged**}

Example:

```
Device(config-if-srv)# ethernet lmi ce-vlan map 30
```

Configures an Ethernet LMI customer VLAN-to-EVC map for a particular UNI.

Note To specify both VLAN IDs and untagged VLANs in the map, specify the VLAN IDs first and then specify the **untagged** keyword as follows: **ethernet lmi ce-vlan map 100,200,300,untagged**. Also, if the **untagged** keyword is not specified in the map configuration, the main interface line protocol on the Customer Edge (CE) device will be down.

Step 17 **ethernet lmi interface**

Example:

```
Device(config-if-srv)# ethernet lmi interface
```

Enables Ethernet local management interface (LMI) on a UNI.

Step 18 **encapsulation dot1q** *vlan-id*

Example:

```
Device(config-if-srv)# encapsulation dot1q 2
```

Defines the matching criteria to map 802.1Q frames ingress on an interface to the appropriate service instance.

Step 19 **bridge-domain** *domain-number*

Example:

```
Device(config-if-srv)# bridge-domain 1
```

Binds a service instance to a bridge domain instance.

Step 20 **cfm mep domain** *domain-name* **mpid** *mpid-id*

Example:

```
Device(config-if-srv)# cfm mep domain provider mpid 10
```

Configures a maintenance endpoint (MEP) for a domain.

Step 21 **exit**

Example:

```
Device(config-if-srv)# exit
```

Returns to interface configuration mode.

Step 22 **service instance** *service-instance-id* **ethernet**

Example:

```
Device(config-if)# service instance 22 ethernet
```

Configures an Ethernet service instance on an interface and enters Ethernet service configuration mode.

Step 23 **encapsulation untagged**

Example:

```
Device(config-if-srv)# encapsulation untagged
```

Defines the matching criteria to map untagged ingress Ethernet frames on an interface to the appropriate service instance.

Step 24 **l2protocol peer**

Example:

```
Device(config-if-srv)# l2protocol peer
```

Configures transparent Layer 2 protocol peering on the interface.

Step 25 **bridge-domain** *bridge-domain-number*

Example:

```
Device(config-if-srv)# bridge-domain 1
```

Binds a service instance to a bridge domain instance.

Step 26 **exit**

Example:

```
Device(config-if)# exit
```

Returns to interface configuration mode.

Step 27 **ethernet uni** [**bundle** [**all-to-one**] | **id** *uni-id* | **multiplex**]

Example:

```
Device(config-if)# ethernet uni bundle
```

Sets UNI bundling attributes.

Step 28 **end**

Example:

```
Device(config-if)# end
```

Returns to privileged EXEC mode.

Enabling Ethernet LMI

The order in which the global and interface configuration commands are issued determines the configuration. The last command that is issued has precedence.

Perform this task to enable Ethernet Local Management Interface (LMI) on a device or on an interface.

Procedure

Step 1 **enable**

Example:

```
Device> enable
```

Enables privileged EXEC mode.

- Enter your password if prompted.

Step 2 **configure terminal**

Example:

```
Device# configure terminal
```

Enters global configuration mode.

Step 3 **interface** *type number*

Example:

```
Device(config)# interface ethernet 1/3
```

Defines an interface to configure as an Ethernet LMI interface and enters interface configuration mode.

Step 4 **ethernet lmi interface**

Example:

```
Device(config-if)# ethernet lmi interface
```

Configures Ethernet LMI on the interface.

- When Ethernet LMI is enabled globally, it is enabled on all interfaces unless you disable it on specific interfaces. If Ethernet LMI is disabled globally, you can use this command to enable it on specified interfaces.

Step 5 **ethernet lmi** {**n393** *value* | **t392** *value*}

Example:

```
Device(config-if)# ethernet lmi n393 10
```

Configures Ethernet LMI parameters for the UNI.

Step 6 **end**

Example:

```
Device(config-if)# end
```

Returns to privileged EXEC mode.

Displaying Ethernet LMI and OAM Manager Information

Perform this task to display Ethernet Local Management Interface (LMI) or Operation, Administration, and Management (OAM) manager information. After step 1, all the steps are optional and can be performed in any order.

Procedure

Step 1 **enable**

Example:

```
Device> enable
```

Enables privileged EXEC mode.

- Enter your password if prompted.

Step 2 **show ethernet lmi** {{**evc** [**detail** *evc-id* [**interface** *type number*] | **map interface** *type number*]} | {**parameters** | **statistics**} **interface** *type number* | **uni map** [**interface** *type number*]}

Example:

```
Device# show ethernet lmi evc
```

Displays information that was sent to the customer edge (CE).

Step 3 **show ethernet service evc** [**detail** | **id** *evc-id* [**detail**] | **interface** *type number* [**detail**]]

Example:

```
Device# show ethernet service evc
```

Displays information about all Ethernet virtual circuits (EVCs) or about a specified EVC.

Step 4 **show ethernet service instance** [**detail** | **id** *id* | **interface** *type number* | **policy-map** | **stats**]

Example:

```
Device# show ethernet service instance detail
```

Displays information about customer service instances.

Step 5 **show ethernet service interface** [*type number*] [**detail**]

Example:

```
Device# show ethernet service interface ethernet 1/3 detail
```

Displays interface-only information about Ethernet customer service instances for all interfaces or for a specified interface.

Examples

The following example shows sample output from the **show ethernet lmi** command using the **evc** keyword:

```
Device# show ethernet lmi evc

St  EVC Id                                                       Port
--- ------------------------------------------------------------ --------------
```

```
A  EVC_MP2MP_101                                                Gi0/1
A  EVC_P2P_110                                                  Gi0/1
```

The following example is sample output from the **show ethernet service evc** command:

```
Device# show ethernet service evc

Identifier                    Type  Act-UNI-cnt Status
50                            MP-MP     0       NotDefined
```

The following is sample output from the **show ethernet service interface** command using the **detail** keyword:

```
Device# show ethernet service interface gigabitethernet 0/0/2 detail

Interface: Gigabitethernet 0/0/2
ID: uni2
CE-VLANS: 30
EVC Map Type: Bundling
Associated EVCs:
    EVC-ID                        CE-VLAN
    50                            30
Associated Service Instances:
    Service-Instance-ID CE-VLAN
    400                 30
```

The following is sample output from the **show ethernet service instance** command using the **detail** keyword:

```
Device# show ethernet service instance detail

Service Instance ID: 400
Associated Interface: GigabitEthernet0/0/2
Associated EVC: 50
CE-Vlans: 30
State: AdminDown
EFP Statistics:
   Pkts In   Bytes In   Pkts Out  Bytes Out
         0          0          0          0
```

Configuration Examples for Ethernet Local Management Interface at a Provider Edge

Example: Ethernet OAM Manager on a PE Device Configuration

This example shows a sample configuration of Operation, Administration, and Management (OAM) manager, Connectivity Fault Management (CFM), and Ethernet Local Management Interface (LMI) on a provider edge (PE) device. In this example, a bridge domain is specified.

```
Device> enable
Device# configure terminal
Device(config)# ethernet cfm global
Device(config)# ethernet cfm domain provider level 4
Device(config-ecfm)# service customer_1 evc test1 vlan 10
```

```
Device(config-ecfm-srv)# continuity-check
Device(config-ecfm-srv)# continuity-check interval 1s/10s/1m/10m
Device(config-ecfm-srv)# exit
Device(config-ecfm)# exit
Device(config)# ethernet evc test1
Device(config-evc)# uni count 3
Device(config-evc)# oam protocol cfm domain provider
Device(config-evc)# exit
Device(config)#  interface gigabitEthernet 0/0/2
Device(config-if)# ethernet lmi interface
Device(config-if)# ethernet uni id CISCO
Device(config-if)# service instance 1 ethernet
Device(config-if-srv)# encapsulation untagged
Device(config-if-srv)# l2protocol peer
Device(config-if-srv)# bridge-domain 1
Device(config-if-srv)# exit
Device(config-if)# service instance 2 ethernet1
Device(config-if-srv)# ethernet lmi ce-vlan map 101
Device(config-if-srv)# encapsulation dot1q 2
Device(config-if-srv)# bridge-domain 2
Device(config-if-srv)# cfm mep domain provider mpid 10
Device(config-if-srv-ecfm-mep)# end
```

This example shows a configuration of OAM manager, CFM, and Ethernet LMI over an Xconnect configuration:

```
Device> enable
Device# configure terminal
Device(config)# ethernet cfm global
Device(config)# ethernet cfm domain provider level 4
Device(config-ecfm)# service customer_1 evc test1
Device(config-ecfm-srv)# continuity-check
Device(config-ecfm-srv)# continuity-check interval 1s,10s,1m,10m
Device(config-ecfm-srv)# exit
Device(config-ecfm)# exit
Device(config)# ethernet evc test1
Device(config-evc)# oam protocol cfm domain provider
Device(config-evc)# exit
Device(config)#  interface gigabitEthernet 0/0/2
Device(config-if)# ethernet lmi interface
Device(config-if)# ethernet uni id CISCO
Device(config-if)# service instance 1 ethernet
Device(config-if-srv)# encapsulation untagged
Device(config-if-srv)# l2protocol peer
Device(config-if-srv)# bridge-domain 1
Device(config-if-srv)# exit
Device(config-if)# service instance 2 ethernet
Device(config-if-srv)# ethernet lmi ce-vlan map 101
Device(config-if-srv)# encapsulation dot1q 2
Device(config-if-srv)# xconnect 10.1.1.1 100 encapsulation mpls
Device(cfg-if-ether-vc-xconn)# exit
Device(config-if-srv)# cfm mep domain provider mpid 10
Device(config-if-srv-ecfm-mep)# end
```

Example: Ethernet LMI on a CE Device Configuration

This example shows how to configure Ethernet Local Management Interface (LMI) globally on a customer edge (CE) device:

```
Device# configure terminal
Device(config)# ethernet lmi global
Device(config)# ethernet lmi ce
Device(config)# exit
```

CHAPTER 15

Trunk EFP Support

The Trunk EFP Support feature provides support for Ethernet flow points (EFPs) on trunk ports. A trunk port allows a range of VLANs to be forwarded on a given interface while still maintaining data-plane segmentation between the VLANs.

Restrictions for Trunk EFP Support

- The **rewrite ingress tag pop 1 symmetric** command is the only **rewrite** command that is supported for trunk EFP configurations. The **rewrite ingress tag pop 1 symmetric** command must be included in the configuration when the Trunk EFP Support feature is enabled.
- A bridge-domain number that is part of a trunk EFP configuration cannot be shared by other EFPs under the same port or interface.
- Only one trunk EFP can be configured under one port or interface.
- All features configured on a trunk EFP (other than encapsulations and bridge-domain assignments) are applied uniformly to all VLANs and bridge domains. If a feature requires VLAN-specific or bridge-domain-specific configuration values, the feature cannot be applied on the trunk EFP. Those special VLANs or bridge domains must be removed from the EFP trunk to form individual EFPs.
- Trunk EFP MET supports a maximum of 4078 VLANs and the maximum threshold supported is 20480.
- Untagged EFP should be added to the BDI when untagged packets are directed towards the interface to avoid packets punting to host queue.

RSP3 Module:

- L2 port will start dropping untagged traffic when untagged/default/ptag EFP is not configured and it may start impacting any control plane protocol which requires untagged traffic to be processed. If that happens, you need to explicitly configure the untagged EFP. For example, LACP.

Restrictions for Trunk EFP Support

- Only 1000 VLANs can be configured for a trunk EFP (with or without port channel).
- Trunk EVC and encapsulation default EVC cannot co-exist on the same interface.
- Dynamically changing the Trunk EFP number on an interface is *not* supported on the RSP3 module.

Restrictions for Trunk EFP with Encapsulation from Bridge Domain

- When an EFP is created on an interface followed by a TEFP with encapsulation from bridge domain (BD), all the BDs in the switch gets added to the TEFP with encapsulation from BD except the ones present in the EFP configured .
- You cannot create an EFP or TEFP after configuring TEFP with encapsulation from BD. It is recommneded that TEFP with encapsulation from BD should be the last EFP created on an interface.
- You cannot make changes to EFP after you have configured TEFP with encapsulation from BD. If you need to edit the EFP, you must first remove the TEFP with encapsulation from BD and then edit the TEFP.
- You cannot convert a TEFP into a TEFP with encapsulation from BD or vice versa.
- It is recommended to have a service instance ID of the TEFP with encapsulation from BD greater than the ID of any other EFP configured on that interface.
- You must maintain some delay when detaching and attaching the scaled TEFP with encapsulation from BD configurations.
- On an access interface having both EFP and TEFP or TEFP with encapsulation from BD configured, any data traffic with VLAN ID equal to bridge domain of EFP is flooded if the VLAN ID present in the data traffic does not match the encapsulation values present in the EFP and TEFP with encapsulation from BD.

Information About Trunk EFP Support

Benefits of Trunk EFP Support

The Carrier Ethernet infrastructure supports the following types of Ethernet flow points (EFPs):

- Static EFPs that are user-configurable.
- Dynamic EFPs that are created and maintained during a Cisco Intelligent Services Gateway (ISG) session.

With this feature, a new EFP type has been added that is intended for use on a trunk port.

A trunk port allows a range of VLANs to be forwarded on a given interface while maintaining data-plane segmentation between the VLANs.

Note Trunk EFP (with or without port channel) supports encapsulation of up to 1000 VLANs.

Like a static EFP, this new type of EFP is user-configurable via the **service instance trunk** command, the **encapsulation** command, and the **bridge-domain from-encapsulation** command when the Trunk EFP Support feature is enabled.

Ethernet Flow Points

An Ethernet flow point (EFP) is a forwarding decision point in the provider edge (PE) router, which gives network designers flexibility to make many Layer 2 flow decisions within the interface. Many EFPs can be configured on a single physical port. (The number varies from one device to another.) EFPs are the logical demarcation points of an Ethernet virtual connection (EVC) on an interface. An EVC that uses two or more user network interfaces (UNIs) requires an EFP on the associated ingress and egress interfaces of every device that the EVC passes through.

EFPs can be configured on any Layer 2 traffic port; however, they are usually configured on UNI ports. The following parameters (matching criteria) can be configured on the EFP:

- Frames of a specific VLAN, a VLAN range, or a list of VLANs (100-150 or 100,103,110)
- Frames with no tags (untagged)
- Frames with identical double-tags (VLAN tags) as specified
- Frames with identical Class of Service (CoS) values

A frame passes each configured match criterion until the correct matching point is found. If a frame does not fit any of the matching criteria, it is dropped. Default criteria can be configured to avoid dropping frames.

You can configure a new type of TEFP called TEFP with encapsulation from bridge domain (BD). All the BDs configured on the switch are part of the VLAN list of the encapsulated TEFP. The TEFP is encapsulated using the **encapsulation dot1q from-bd** command. The feature brings about the following interaction between the Ethernet-EFP and Layer2-bridge domain components:

- If BDs exist in the system and a TEFP with encapsulation from bridge domain is created, then all the BDs get added to the VLAN list of TEFP with encapsulation from bridge domain.
- If TEFP with encapsulation from bridge domain exists in the system and a new BD is created, then the BD is added to the VLAN list of all the TEFP with encapsulation from bridge domain in the system.
- If TEFP with encapsulation from bridge domain exists in the system and a BD gets deleted, and if the deleted BD is not part of an existing TEFP or EFP then it gets deleted from all the TEFP with encapsulation from bridge domain in the system.

The following types of commands can be used in an EFP:

- Rewrite commands—In each EFP, VLAN tag management can be specified with the following actions:
  - Pop—1) pops out a tag; 2) pops out two tags
  - Push— pushes in a tag
  - Translate—1 to 1) changes a tag value; 1 to 2) pops one tag and pushes two tags; 2 to 1) pops two tags and pushes one tag; 2 to 2) changes the value for two tags

- Forwarding commands—Each EFP specifies the forwarding command for the frames that enter the EFP. Only one forwarding command can be configured per EFP. The forwarding options are as follows:
  - Layer 2 point-to-point forwarding to a pseudowire tunnel
  - Multipoint bridge forwarding to a bridge domain entity
  - Local switch-to-switch forwarding between two different interfaces
- Feature commands—In each EFP, the QoS features or parameters can be changed and the ACL can be updated.

Trunk Ports

An Ethernet interface can be configured as a trunk port (interface). A trunk port, also known as a trunk, is a point-to-point link between a networking device and another networking device. Trunks carry the traffic of multiple VLANs over a single link and allow you to extend VLANs across an entire network. A trunk port configured on the interface with two or more VLANs can carry traffic for several VLANs simultaneously.

To correctly deliver the traffic on a trunk port with several VLANs, the device uses the IEEE 802.1Q encapsulation or tagging method.

How to Enable Trunk EFP Support

Enabling Trunk EFP Support

To enable Ethernet flow point (EFP) support on a trunk port or trunk interface, complete the following steps.

Note TEFP is supported on a PC interface and on a Gigabit interface. The procedure listed below is for TEFP configuration on a PC interface. Similar procedure is used for TEFP configuration on a gigabit interface.

Note When configuring TEFP on a port-channel interface, ensure that the port interface is always up.

Procedure

Step 1 **enable**

Example:

```
Device> enable
```

Enables privileged EXEC mode.

- Enter your password if prompted.

Step 2 **configure terminal**

Example:

```
Device# configure terminal
```

Enters global configuration mode.

Step 3 **interface** *port-channel number*

Example:

```
Device(config)# interface port-channel 1
```

Configures the interface and enters interface configuration mode.

Step 4 **service instance trunk** *id* **ethernet**

Example:

```
Device(config-if)# service instance trunk 1 ethernet
```

Configures an Ethernet service instance on an interface and enters Ethernet service configuration mode.

Step 5 **encapsulation dot1q** {**from-bd** |*vlan-id* [**,** *vlan-id* [**-** *vlan-d*]]}

Example:

```
Device(config-if-srv)# encapsulation dot1q 1-5, 7, 9-12
```

```
Device(config-if-srv)# encapsulation dot1q from-bd
```

Defines the matching criteria to map 802.1Q frames ingress on an interface to the appropriate service instance.

Step 6 **rewrite ingress tag pop 1 symmetric**

Example:

```
Device(config-if-srv)# rewrite ingress tag pop 1 symmetric
```

Specifies the encapsulation adjustment to be performed on a frame that is entering a service instance.

Step 7 **bridge-domain from-encapsulation**

Example:

```
Device(config-if-srv)# bridge-domain from-encapsulation
```

Creates a list of bridge domains for an EFP trunk port using the bridge-domain IDs derived from the encapsulation VLAN numbers.

Step 8 **no shutdown**

Example:

```
Device(config-if-srv)# no shutdown
```

Disables shutdown and keeps the interface or port active.

Step 9 **end**

Example:

```
Device(config-if-srv)# end
```

Returns to privileged EXEC mode.

Verifying the Trunk EFP Support Configuration

Use one or more of the commands listed below to verify the Trunk EFP Support feature configuration.

Procedure

Step 1 **enable**

Example:

```
Device> enable
```

Enables privileged EXEC mode.

- Enter your password if prompted.

Step 2 **show ethernet service instance**

Example:

```
Device# show ethernet service instance
```

Displays information about Ethernet service instances.

Step 3 **show ethernet service instance interface port-channel** [*number*]

Example:

```
Device# show ethernet service instance interface port-channel 1
```

Displays interface-only information about Ethernet service instances for all port-channel interfaces or for a specified port-channel interface.

Step 4 **show bridge-domain**

Example:

```
Device# show bridge-domain
```

Displays bridge-domain information.

Step 5 **exit**

Example:

```
Device# exit
```

Exits privileged EXEC mode.

Configuration Examples

Example: Configuring Trunk EFP Support

In the following example, EFP support has been configured on a trunk interface.

```
Device> enable
Device# configure terminal
Device(config)# interface port-channel 1
Device(config-if)# service instance trunk 1 ethernet
Device(config-if-srv)# encapsulation dot1q 1 - 5, 7, 9 - 12
Device(config-if-srv)# rewrite ingress tag pop 1 symmetric
Device(config-if-srv)# bridge-domain from-encapsulation
Device(config-if-srv)# no shutdown
Device(config-if-srv)# end
```

Example: Configure the Trunk EFP with Encapsulation from Bridge Domain

```
Device> enable
Device# configure terminal
Device(config)#interface gigabitEthernet 0/0/0
Device(config-if)#service instance trunk 4000 eth
Device(config-if-srv)#encapsulation dot1q from-bd
Device(config-if-srv)#rewrite ingress tag pop 1 symmetric
Device(config-if-srv)#bridge-domain from-encapsulation
Device(config-if-srv)#end
```

Example: Verifying the Trunk EFP Support Configuration

The following is sample output from the **show ethernet service instance** command. The output displays trunk as the service instance type and indicates that a bridge domain for VLANs in the range of 12 to 1900 (as specified by the encapsulation parameters) has been created for service instance 4000 on a trunk port (interface).

```
Device# show ethernet service instance id 4000 interface port-channel 1

Service Instance ID: 4000
Service Instance Type: Trunk
Associated Interface Port-channel: 1
Associated EVC:
L2protocol drop
CE-Vlans:
Encapsulation: dot1q 12-1900 vlan protocol type 0x8100
Rewrite: ingress tag pop 1 symmetric
Interface Port-channel Dot1q Tunnel Ethertype: 0x8100
State: Up
EFP Statistics:
   Pkts In   Bytes In   Pkts Out  Bytes Out
168729725 10798985220  160246675 10255787200
EFP Microblocks:
```

```
****************
Microblock type: Bridge-domain
Bridge-domain: 12-1900
```

Example: Verify the Trunk EFP with Encapsulation from Bridge Domain

```
Device#show ethernet service  instance id 4000 int GigabitEthernet 0/0/0 detail
Service Instance ID: 4000
Service Instance Type: Trunk
Associated Interface: GigabitEthernet0/0/0
Associated EVC:
L2protocol drop
CE-Vlans:
Encapsulation: dot1q 2-21 vlan protocol type 0x8100
Rewrite: ingress tag pop 1 symmetric
Interface Dot1q Tunnel Ethertype: 0x8100
State: Up
EFP Statistics:
   Pkts In   Bytes In   Pkts Out  Bytes Out
2810511074 191114753032          0          0
EFP Microblocks:
****************
Microblock type: Bridge-domain
Bridge-domain: 2-21

Microblock type: L2Mcast
L2 Multicast GID: 9

Microblock type: dhcp_snoop
L2 Multicast GID: 9

Microblock type: PPPoE IA UBLOCK
PPPoE IA info
Enable: 0
Format Type: 0
cricuit id:
remote id:
```

CHAPTER 16

Configuring Pseudowire

This chapter provides information about configuring pseudowire (PW) features.

Pseudowire Overview

The following sections provide an overview of pseudowire.

Circuit Emulation Overview

Circuit Emulation (CEM) is a technology that provides a protocol-independent transport over IP networks. It enables proprietary or legacy applications to be carried transparently to the destination, similar to a leased line.

The Cisco router supports two pseudowire types that utilize CEM transport: Structure-Agnostic TDM over Packet (SAToP) and Circuit Emulation Service over Packet-Switched Network (CESoPSN). The following sections provide an overview of these pseudowire types.

Structure-Agnostic TDM over Packet

SAToP encapsulates time division multiplexing (TDM) bit-streams (T1, E1, T3, E3) as PWs over public switched networks. It disregards any structure that may be imposed on streams, in particular the structure imposed by the standard TDM framing.

The protocol used for emulation of these services does not depend on the method in which attachment circuits are delivered to the provider edge (PE) devices. For example, a T1 attachment circuit is treated the same way for all delivery methods, including copper, multiplex in a T3 circuit, a virtual tributary of a SONET/SDH circuit, or unstructured Circuit Emulation Service (CES).

In SAToP mode the interface is considered as a continuous framed bit stream. The packetization of the stream is done according to IETF RFC 4553. All signaling is carried out transparently as a part of a bit stream. The figure below shows the frame format in Unstructured SAToP mode.

Figure 10: Unstructured SAToP Mode Frame Format

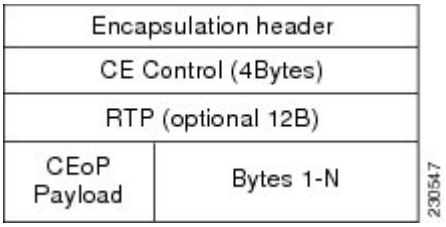

The table below shows the payload and jitter limits for the T1 lines in the SAToP frame format.

SAToP T1 Frame: Payload and Jitter Limits

Maximum Payload	Maximum Jitter	Minimum Jitter	Minimum Payload	Maximum Jitter	Minimum Jitter
960	32	10	192	64	2

The table below shows the payload and jitter limits for the E1 lines in the SAToP frame format.

SAToP E1 Frame: Payload and Jitter Limits

Maximum Payload	Maximum Jitter	Minimum Jitter	Minimum Payload	Maximum Jitter	Minimum Jitter
1280	32	10	256	64	2

For instructions on how to configure SAToP, see Configuring Structure-Agnostic TDM over Packet.

Circuit Emulation Service over Packet-Switched Network

CESoPSN encapsulates structured TDM signals as PWs over public switched networks (PSNs). It complements similar work for structure-agnostic emulation of TDM bit streams, such as SAToP. Emulation of circuits saves PSN bandwidth and supports DS0-level grooming and distributed cross-connect applications. It also enhances resilience of CE devices due to the effects of loss of packets in the PSN.

CESoPSN identifies framing and sends only the payload, which can either be channelized T1s within DS3 or DS0s within T1. DS0s can be bundled to the same packet. The CESoPSN mode is based on IETF RFC 5086.

CESoPSN supports channel associated signaling (CAS) for E1 and T1 interfaces. CAS provides signaling information within each DS0 channel as opposed to using a separate signaling channel. CAS is also referred to as in-band signaling or robbed bit signaling.

Each supported interface can be configured individually to any supported mode. The supported services comply with IETF and ITU drafts and standards.

The figure below shows the frame format in CESoPSN mode.

Figure 11: Structured CESoPSN Mode Frame Format

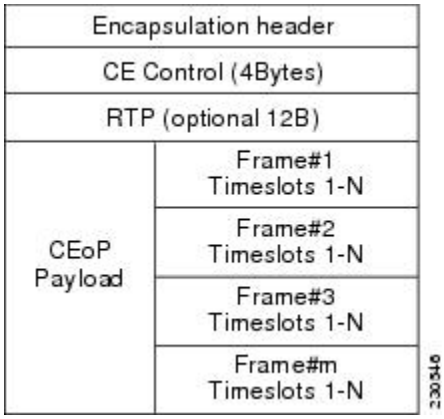

The table below shows the payload and jitter for the DS0 lines in the CESoPSN mode.

CESoPSN DS0 Lines: Payload and Jitter Limits

DS0	Maximum Payload	Maximum Jitter	Minimum Jitter	Minimum Payload	Maximum Jitter	Minimum Jitter
1	40	32	10	32	256	8
2	80	32	10	32	128	4
3	120	32	10	33	128	4
4	160	32	10	32	64	2
5	200	32	10	40	64	2
6	240	32	10	48	64	2
7	280	32	10	56	64	2
8	320	32	10	64	64	2
9	360	32	10	72	64	2
10	400	32	10	80	64	2
11	440	32	10	88	64	2
12	480	32	10	96	64	2
13	520	32	10	104	64	2
14	560	32	10	112	64	2
15	600	32	10	120	64	2
16	640	32	10	128	64	2
17	680	32	10	136	64	2

DS0	Maximum Payload	Maximum Jitter	Minimum Jitter	Minimum Payload	Maximum Jitter	Minimum Jitter
18	720	32	10	144	64	2
19	760	32	10	152	64	2
20	800	32	10	160	64	2
21	840	32	10	168	64	2
22	880	32	10	176	64	2
23	920	32	10	184	64	2
24	960	32	10	192	64	2
25	1000	32	10	200	64	2
26	1040	32	10	208	64	2
27	1080	32	10	216	64	2
28	1120	32	10	224	64	2
29	1160	32	10	232	64	2
30	1200	32	10	240	64	2
31	1240	32	10	248	64	2
32	1280	32	10	256	64	2

Transportation of Service Using Ethernet over MPLS

Ethernet over MPLS (EoMPLS) PWs provide a tunneling mechanism for Ethernet traffic through an MPLS-enabled Layer 3 core network. EoMPLS PWs encapsulate Ethernet protocol data units (PDUs) inside MPLS packets and use label switching to forward them across an MPLS network. EoMPLS PWs are an evolutionary technology that allows you to migrate packet networks from legacy networks while providing transport for legacy applications. EoMPLS PWs also simplify provisioning, since the provider edge equipment only requires Layer 2 connectivity to the connected customer edge (CE) equipment. The Cisco router implementation of EoMPLS PWs is compliant with the RFC 4447 and 4448 standards.

The Cisco router supports VLAN rewriting on EoMPLS PWs. If the two networks use different VLAN IDs, the router rewrites PW packets using the appropriate VLAN number for the local network.

For instructions on how to create an EoMPLS PW, see . Configuring an Ethernet over MPLS Pseudowire, on page 274.

CEM Configuration

This section provides information about how to configure CEM. CEM provides a bridge between a time-division multiplexing (TDM) network and a packet network, such as Multiprotocol Label Switching (MPLS). The

router encapsulates the TDM data in the MPLS packets and sends the data over a CEM pseudowire to the remote provider edge (PE) router. Thus, function as a physical communication link across the packet network.

Configuration Guidelines and Restrictions

Not all combinations of payload size and dejitter buffer size are supported. If you apply an incompatible payload size or dejitter buffer size configuration, the router rejects it and reverts to the previous configuration.

Configuring a CEM Group

Procedure

Step 1 **enable**

Example:

```
Router> enable
```

Enables privileged EXEC mode.

- Enter your password if prompted.

Step 2 **configure terminal**

Example:

```
Router# configure terminal
```

Enters global configuration mode.

Step 3 **controller {t1 | e1}** *slot/subslot/port*

Example:

```
Router(config)# controller t1 1/0
```

Enters controller configuration mode.

- Use the slot and port arguments to specify the slot number and port number to be configured.

Note The slot number is always 0.

Step 4 **cem-group group-number {unframed | timeslots timeslot }**

Example:

```
Router(config-controller)# cem-group 6 timeslots 1-4,9,10
```

Creates a circuit emulation channel from one or more time slots of a T1 or E1 line.

- The **group-number** keyword identifies the channel number to be used for this channel. For T1 ports, the range is 0 to 23. For E1 ports, the range is 0 to 30.
- Use the **unframed** keyword to specify that a single CEM channel is being created including all time slots and the framing structure of the line.
- Use the **timeslots** keyword and the timeslot argument to specify the time slots to be included in the CEM channel. The list of time slots may include commas and hyphens with no spaces between the numbers.

Step 5 **end**

Example:

```
Router(config-controller)# end
```

Exits controller configuration mode and returns to privileged EXEC mode.

Using CEM Classes

A CEM class allows you to create a single configuration template for multiple CEM pseudowires. Follow these steps to configure a CEM class:

Note The CEM parameters at the local and remote ends of a CEM circuit must match; otherwise, the pseudowire between the local and remote PE routers will not come up.

Note You cannot apply a CEM class to other pseudowire types such as ATM over MPLS.

Procedure

Step 1 **enable**

Example:

```
Router> enable
```

Enables privileged EXEC mode.

- Enter your password if prompted.

Step 2 **configure terminal**

Example:

```
Router# configure terminal
```

Enters global configuration mode.

Step 3 **class cem mycemclass**

Example:

```
Router(config)# class cem mycemclass
```

Creates a new CEM class

Step 4 **payload-size 512**

Example:

```
Router(config-cem-class)# payload-size 512
```

Enter the configuration commands common to the CEM class. This example specifies a sample rate and payload size.

Step 5 **dejitter-buffer 10**

Example:

```
Router(config-cem-class)# dejitter-buffer 10
```

This example specifies the dejitter buffer.

Step 6 **idle-pattern 0x55**

Example:

```
Router(config-cem-class)# idle-pattern 0x55
```

This example specifies the idle pattern.

Step 7 **exit**

Example:

```
Router(config-cem-class)# exit
```

Returns to the config prompt.

Step 8 **interface cem 0/0**

Example:

```
Router(config)# interface cem 0/0
```

Configure the CEM interface that you want to use for the new CEM class.

Step 9 **no ip address**

Example:

```
Router(config-if)# no ip address
```

Configure the CEM interface that you want to use for the new CEM class.

Step 10 **cem 0**

Example:

```
Router(config-if)# cem 0
```

Configure the CEM interface that you want to use for the new CEM class.

Step 11 **cem class mycemclass**

Example:

```
Router(config-if-cem)# cem class mycemclass
```

Configure the CEM interface that you want to use for the new CEM class.

Step 12 **xconnect 10.10.10.10 200 encapsulation mpls**

Example:

```
Router(config-if-cem)# xconnect 10.10.10.10 200 encapsulation mpls
```

Configure the CEM interface that you want to use for the new CEM class.

Note The use of the **xconnect** command can vary depending on the type of pseudowire you are configuring.

Step 13 **end**

Example:

```
Router(config-if-cem)# end
```

Exits the CEM interface.

CEM Parameters Configuration

Note The CEM parameters at the local and remote ends of a CEM circuit must match; otherwise, the pseudowire between the local and remote PE routers will not come up.

Configuring Payload Size (Optional)

To specify the number of bytes encapsulated into a single IP packet, use the pay-load size command. The size argument specifies the number of bytes in the payload of each packet. The range is from 32 to 1312 bytes.

Default payload sizes for an unstructured CEM channel are as follows:

- E1 = 256 bytes
- T1 = 192 bytes
- DS0 = 32 bytes

Default payload sizes for a structured CEM channel depend on the number of time slots that constitute the channel. Payload size (L in bytes), number of time slots (N), and packetization delay (D in milliseconds) have the following relationship: L = 8*N*D. The default payload size is selected in such a way that the packetization delay is always 1 millisecond. For example, a structured CEM channel of 16xDS0 has a default payload size of 128 bytes.

The payload size must be an integer of the multiple of the number of time slots for structured CEM channels.

Setting the Dejitter Buffer Size

To specify the size of the dejitter buffer used to compensate for the network filter, use the dejitter-buffer size command. The configured dejitter buffer size is converted from milliseconds to packets and rounded up to the next integral number of packets. Use the size argument to specify the size of the buffer, in milliseconds. The range is from 1 to 32 ms; the default is 5 ms.

Setting an Idle Pattern (Optional)

To specify an idle pattern, use the **[no] idle-pattern pattern1** command. The payload of each lost CESoPSN data packet must be replaced with the equivalent amount of the replacement data. The range for pattern is from 0x0 to 0xFF; the default idle pattern is 0xFF.

Custom Idle Pattern

Table 23: Feature History

Feature Name	Release Information	Description
Custom Idle Pattern	Cisco IOS XE Cupertino 17.9.1	You can configure idle pattern manually on CEM circuits and verify if it's stable and transmitted to the other end in alarm conditions. You can configure on all CEM PWs in a T1/E1 circuit. Supported on the following IMs on CESoPSN circuits with both partial and full time slots. • 48-port T1/E1 CEM Interface Module • 48-port T3/E3 CEM Interface Module • 1-port OC481/ STM-16 or 4-port OC-12/OC-3 / STM-1/STM-4 + 12-Port T1/E1 + 4-Port T3/E3 CEM Interface Module • NCS 4200 Combo 8-Port SFP GE and 1-Port 10 GE 20G Interface Module These idle pattern numbers are used for tracking purposes.

To define the idle pattern that a circuit emulation (CEM) channel transmits when the channel experiences an underrun condition or to replace any missing packets, use the **idle-pattern** command in CEM configuration mode. Starting with Cisco IOS XE Cupertino 17.9.1 release, you can manually configure any 8-bit value from idle pattern. There are multiple CEMs in TDM circuits, these configurations are applicable only to CEM circuits.

For example, a controller T1 0/1/0, can have one CEM circuit. It’s only applicable for CESoP, the time slots can be 1–24, these are full time slots.

For example, under CEM0 you can manually configure any 8-bit value until 255 (0xFF). For partial time slot, consider CEM group 0 with time slot 0, and similarly CEM group 1 with time slot 1.

```
Router(config)# interface CEM0/10/10
Router(config-if)# cem 0
Router(config-if-cem)# idle-pattern 44
```

Enabling Dummy Mode

Dummy mode enables a bit pattern for filling in for lost or corrupted frames. To enable dummy mode, use the **dummy-mode** [**last-frame** | **user-defined**] command. The default is last-frame. The following is an example:

```
Router(config-cem)# dummy-mode last-frame
```

Setting a Dummy Pattern

If dummy mode is set to user-defined, you can use the **dummy-pattern** *pattern* command to configure the dummy pattern. The range for *pattern* is from 0x0 to 0xFF. The default dummy pattern is 0xFF. The following is an example:

```
Router(config-cem)# dummy-pattern 0x55
```

Shutting Down a CEM Channel

To shut down a CEM channel, use the **shutdown** command in CEM configuration mode. The **shutdown** command is supported only under CEM mode and not under the CEM class.

Configuring Structure-Agnostic TDM over Packet

Procedure

Step 1 **enable**

Example:

```
Router> enable
```

Enables privileged EXEC mode.

Step 2 **configure terminal**

Example:

```
Router# configure terminal
```

Enters global configuration mode.

Step 3 **controller t1**

Example:

```
Router(config-controller)# controller t1
```

Configures the T1 or E1 interface.

Step 4 **cem-group 4 unframed**

Example:

```
Router(config-if)# cem-group 4 unframed
```

Assigns channels on the T1 or E1 circuit to the CEM channel. This example uses the **unframed** parameter to assign all the T1 timeslots to the CEM channel.

Step 5 **interface CEM0/4**

Example:

```
Router(config)# interface CEM0/4
```

Defines a CEM group.

Step 6 **no ip address**

Example:

```
Router(config-if)# no ip address
```

Defines a CEM group.

Step 7 **cem 4**

Example:

```
Router(config-if)# cem 4
```

Defines a CEM group.

Step 8 **xconnect 30.30.30.2 304 encapsulation mpls**

Example:

```
Router(config-if)# xconnect 30.30.30.2 304 encapsulation mpls
```

Binds an attachment circuit to the CEM interface to create a pseudowire. This example creates a pseudowire by binding the CEM circuit 304 to the remote peer 30.30.2.304.

Step 9 **exit**

Example:

```
Router(config)# exit
```

Exits configuration mode.

Note When creating IP routes for a pseudowire configuration, we recommend that you build a route from the xconnect address (LDP router-id or loopback address) to the next hop IP address, such as **ip route 30.30.30.2 255.255.255.255 1.2.3.4**

Configuring Circuit Emulation Service over Packet-Switched Network

Follow these steps to configure CESoPSN on the Cisco router.

Procedure

Step 1 Router> **enable**

Enables privileged EXEC mode.

- Enter your password if prompted.

Step 2 Router# **configure terminal**

Enters global configuration mode.

Step 3 Router(config)# **controller [e1|t1] 0/0**

Enters configuration mode for the E1 or T1 controller.

Step 4 Router(config-controller)# **cem-group 5 timeslots 1-24**

Assigns channels on the T1 or E1 circuit to the circuit emulation (CEM) channel. This example uses the **timeslots** parameter to assign specific timeslots to the CEM channel.

Step 5 Router(config-controller)# **exit**

Exits controller configuration.

Step 6 Router(config)# **interface CEM0/5** Router(config-if-cem)# **cem 5**

Defines a CEM channel.

Step 7 Router(config-if-cem)# **xconnect 30.30.30.2 305 encapsulation mpls**

Binds an attachment circuit to the CEM interface to create a pseudowire. This example creates a pseudowire by binding the CEM circuit 5 to the remote peer 30.30.30.2.

Note When creating IP routes for a pseudowire configuration, we recommend that you build a route from the xconnect address (LDP router-id or loopback address) to the next hop IP address, such as `ip route 30.30.30.2 255.255.255.255 1.2.3.4.`

Step 8 Router(config-if-cem)# **exit**

Exits the CEM interface.

Configuring an Ethernet over MPLS Pseudowire

Ethernet over MPLS PWs allow you to transport Ethernet traffic over an existing MPLS network. The Cisco Router supports EoMPLS pseudowires on EVC interfaces.

For more information about Ethernet over MPLS Pseudowires, see the *Transportation of Service Using Ethernet over MPLS* chapter. For more information about how to configure MPLS, see the Cisco IOS XE 3S Configuration Guides. For more information about configuring Ethernet Virtual Connections (EVCs), see Cisco NCS 4200 Series Software Configuration Guide.

Procedure

Step 1 Router> **enable**

Enables privileged EXEC mode.

- Enter your password if prompted.

Step 2 Router# **configure terminal**

Enters global configuration mode.

Step 3 Router(config)# `interface gigabitethernet 0/0/4`

Specifies the port on which to create the pseudowire and enters interface configuration mode. Valid interfaces are physical Ethernet ports.

Step 4 Router(config-if)#**service instance 2 ethernet**

Configure an EFP (service instance) and enter service instance configuration) mode.

- The number is the EFP identifier, an integer from 1 to 4000.
- (Optional) **ethernet** name is the name of a previously configured EVC. You do not need to use an EVC name in a service instance.

Note You can use service instance settings such as encapsulation, dot1q, and rewrite to configure tagging properties for a specific traffic flow within a given pseudowire session. For more information, see Cisco NCS 4200 Series Software Configuration Guide .

Step 5 Router (config-if-srv)# **encapsulation dot1q 2**

Configure encapsulation type for the service instance.

- **default**—Configure to match all unmatched packets.
- **dot1q**—Configure 802.1Q encapsulation.
- **priority-tagged**—Specify priority-tagged frames, VLAN-ID 0 and CoS value of 0 to 7.
- **untagged**—Map to untagged VLANs. Only one EFP per port can have untagged encapsulation.

Step 6 Router (config-if-srv)# **xconnect 10.1.1.2 101 encapsulation mpls**

Binds the Ethernet port interface to an attachment circuit to create a pseudowire. This example uses virtual circuit (VC) 101 to uniquely identify the PW. Ensure that the remote VLAN is configured with the same VC.

Note When creating IP routes for a pseudowire configuration, we recommend that you build a route from the xconnect address (LDP router-id or loopback address) to the next hop IP address, such as **ip route 10.30.30.2 255.255.255.255 10.2.3.4**.

Step 7 Router(config)# **exit**

Exits configuration mode.

Verifying the Interface Configuration

You can use the following commands to verify your pseudowire configuration:

- **show cem circuit**—Displays information about the circuit state, administrative state, the CEM ID of the circuit, and the interface on which it is configured. If **xconnect** is configured under the circuit, the command output also includes information about the attached circuit.

```
Router# show cem circuit ?
  <0-504>    CEM ID
  detail     Detailed information of cem ckt(s)
  interface  CEM Interface
  summary    Display summary of CEM ckts
  |          Output modifiers
```

```
Router# show cem circuit
CEM Int.       ID   Line      Admin     Circuit         AC
----------------------------------------------------------------
CEM0/1/0       1    UP        UP        ACTIVE          --/--
CEM0/1/0       2    UP        UP        ACTIVE          --/--
CEM0/1/0       3    UP        UP        ACTIVE          --/--
CEM0/1/0       4    UP        UP        ACTIVE          --/--
CEM0/1/0       5    UP        UP        ACTIVE          --/--
```

- **show cem circuit**—*D*isplays the detailed information about that particular circuit.

```
Router# show cem circuit 1
CEM0/1/0, ID: 1, Line State: UP, Admin State: UP, Ckt State: ACTIVE
Idle Pattern: 0xFF, Idle cas: 0x8, Dummy Pattern: 0xFF
Dejitter: 5, Payload Size: 40
Framing: Framed, (DS0 channels: 1-5)
Channel speed: 56
CEM Defects Set
Excessive Pkt Loss RatePacket Loss

Signalling: No CAS
Ingress Pkts:    25929                Dropped:             0
Egress Pkts:     0                    Dropped:             0
CEM Counter Details
Input Errors:    0                    Output Errors:       0
Pkts Missing:    25927                Pkts Reordered:      0
Misorder Drops:  0                    JitterBuf Underrun:  1
Error Sec:       26                   Severly Errored Sec: 26
Unavailable Sec: 5                    Failure Counts:      1
Pkts Malformed:  0
```

- **show cem circuit summary**—Displays the number of circuits which are up or down per interface basis.

```
Router# show cem circuit summary
CEM Int.       Total Active  Inactive
-------------------------------------
CEM0/1/0       5     5       0
```

show running configuration—The **show running configuration** command shows detail on each CEM group.

Configuration Examples

The following sections contain sample pseudowire configurations.

Example: CEM Configuration

The following example shows how to add a T1 interface to a CEM group as a part of a SAToP pseudowire configuration. For more information about how to configure pseudowires, see the *Pseudowire Configuration* chapter.

Note This section displays a partial configuration intended to demonstrate a specific feature.

```
controller T1 0/0/0
 framing unframed
 clock source internal
 linecode b8zs
 cablelength short 110
 cem-group 0 unframed

interface CEM0/0/0
 no ip address
 cem 0
  xconnect 18.1.1.1 1000 encapsulation mpls
```

Example: Ethernet over MPLS

PE 1 Configuration

```
!
mpls label range 16 12000 static 12001 16000
mpls label protocol ldp
mpls ldp neighbor 10.1.1.1 targeted ldp
mpls ldp graceful-restart
multilink bundle-name authenticated
!
!
!
!
redundancy
 mode sso
!
!
!
ip tftp source-interface GigabitEthernet0
!
!
interface Loopback0
 ip address 10.5.5.5 255.255.255.255

!
interface GigabitEthernet0/0/4
 no ip address
 negotiation auto
!
 service instance 2 ethernet
  encapsulation dot1q 2
  xconnect 10.1.1.1 1001 encapsulation mpls
 !
 service instance 3 ethernet
```

```
  encapsulation dot1q 3
  xconnect 10.1.1.1 1002 encapsulation mpls
 !
!
interface GigabitEthernet0/0/5
 ip address 172.7.7.77 255.0.0.0
 negotiation auto
 mpls ip
 mpls label protocol ldp
!
router ospf 1
 router-id 10.0.0.5
 network 10.0.0.5 0.0.0.0 area 0
 network 172.0.0.0 0.255.255.255 area 0
 network 10.33.33.33 0.0.0.0 area 0
 network 192.0.0.0 0.255.255.255 area 0
!
```

PE 2 Configuration

```
!
mpls label range 16 12000 static 12001 16000
mpls label protocol ldp
mpls ldp neighbor 10.5.5.5 targeted ldp
mpls ldp graceful-restart
multilink bundle-name authenticated
!
!
redundancy
 mode sso
!
!
!
ip tftp source-interface GigabitEthernet0
!
!
interface Loopback0
 ip address 10.1.1.1 255.255.255.255

!
interface GigabitEthernet0/0/4
 no ip address
 negotiation auto
!
 service instance 2 ethernet
  encapsulation dot1q 2
  xconnect 10.5.5.5 1001 encapsulation mpls
 !
 service instance 3 ethernet
  encapsulation dot1q 3
  xconnect 10.5.5.5 1002 encapsulation mpls
 !
!
interface GigabitEthernet0/0/5
 ip address 172.7.7.7 255.0.0.0
 negotiation auto
 mpls ip
 mpls label protocol ldp
!
router ospf 1
 router-id 10.1.1.1
 network 10.1.1.1 0.0.0.0 area 0
 network 172.0.0.0 0.255.255.255 area 0
```

```
 network 10.33.33.33 0.0.0.0 area 0
 network 192.0.0.0 0.255.255.255 area 0
!
```

CHAPTER 17

Configuring IEEE 802.1ad

Provider networks handle traffic from a large number of customers. It is important that one customer's traffic is isolated from the other customer's traffic.

IEEE 802.1ad enables the service providers to use the architecture and protocols of IEEE 802.1Q to offer separate LANs, bridged local area networks, or virtual bridged local area networks to a number of customers, with minimal cooperation or no cooperation between each customer and the service provider.

IEEE 802.1ad implements standard protocols for double tagging of data. The data traffic coming from the customer side are double tagged in the provider network where the inner tag is the customer-tag (C-tag) and the outer tag is the provider-tag (S-tag). The control packets are tunneled by changing the destination MAC address in the provider network.

A service provider's Layer 2 network transports the subscriber's Layer 2 protocols transparently. Provider Bridge allows the service provider switches to transparently carry customer Layer 2 control frames, such as spanning tree Bridge Protocol Data Units (BPDUs) or Cisco proprietary protocol frames such as Cisco Discovery Protocol (CDP) without mixing the service provider's own traffic and with other customer traffic in the service provider's network. A provider bridge is just like a standard 802.1Q bridge, but it imposes a set of requirements, defined by IEEE 802.1ad standards, on a port in a provider bridge which interfaces to customer. This port is a UNI Port. 802.1ad Provider Bridge thus achieves the same functionality as being addressed with L2PT and QinQ.

When Connectivity Fault Management (CFM) is configured on 802.1ad interfaces, all CFM, Link Ethernet Operations, Administration, and Maintenance (OAM), Enhanced Local Management Interface (ELMI) or Y.1731 performance monitoring packets have their own peer or data rules depending on the type of 802.1ad port configured.

Prerequisites for 802.1ad

- Ethertype should be configured.

Restrictions for 802.1ad

- 802.1ad is supported only on EFP and Trunk EFPs (TEFP).
- Termination of Layer3 interfaces is *not* supported.
- QoS support is same as supported on the 802.1q EVCs.
- Routing over BDI with 802.1ad EVC is *not* supported.
- Outer tag Ethertype 0X88a8 is only supported.
- Global **dot1ad** command is not supported.
- Ethernet 802.1ad is *not* supported on port-channels.
- VPLS is not supported for 802.1ad.
- **l2protocol peer** and **l2protocol drop** commands are *not* supported.
- NNI port does not drop packets with dot1q outer tag.
- When IP SLA sessions are configured with default ethertype (**dot1q**), and the ingress/egress EFPs are configured with **dot1ad** (NNI) encapsulation without any rewrite rule, the IP SLA frames sent out of the NNI are as follows:
  - Internal direction-- is set with dot1ad (0x88A8) as ethertype (as a pop/push is performed internally).
  - External direction-- is set with dot1q (0x8100) as ethertype (as dot1ad port (NNI) forwards dot1q frames as well).
- **Encapsulation dot1ad <dot1q>** on NNI ports with rewrite configured as `rewrite ingress tag pop 2 symm` at egress results in pushing 2 dot1q tags. It is advised not to use **pop 2**.

Rewrite Configuration Model for 802.1ad Ports

Note This section is not applicable for RSP3 Module

The table describes the rewrite configuration supported on service instances for the C-UNI, S-UNI and NNI ports

Port	Rewrite	Ingress Direction	Egress Direction
Bridge Domain			
C-UNI	Push	Supported	Not supported
S-UNI			
NNI	Pop	Supported	Not supported
	Push	Not supported	Supported

Port	Rewrite	Ingress Direction	Egress Direction
Trunk EFP			
C-UNI	Pop	Supported	Supported
S-UNI	NA	NA	NA
NNI	Pop	Supported	Not supported
	Push	Not supported	Supported
Cross Connect			
C-UNI	Push	Supported	Not supported
S-UNI			
NNI	NA	NA	NA

Information About 802.1ad

802.1ad Ports

In 802.1ad, a port is configured as either a customer user-network interface (C-UNI), a service-provider UNI (S-UNI), or a network-to-network interface (NNI). Only Layer 2 interfaces can be 802.1ad ports.

- **C-UNI**—an be either an access port or an 802.1Q trunk port. The port uses the customer bridge addresses. To configure a C-UNI port, enter the ethernet dot1ad uni c-port interface configuration command.
- **S-UNI**—an access port that provides the same service to all customer VLANs entering the interface, marking all C-VLANs entering the port with the same S-VLAN. In this mode, the customer's port is configured as a trunk port, and traffic entering the S-UNI is tagged. Use the ethernet dot1ad uni s-port interface configuration command on an access port with an access VLAN.
- **NNI**—entering the ethernet dot1ad nni interface command on a trunk port creates 802.1ad EtherType (0x88a8) and uses S-bridge addresses for CPU-generated Layer 2 protocol PDUs.

Service Provider Bridges

Provider bridges pass the network traffic of multiple customers. The traffic flow of each customer must be isolated from one another. For Layer 2 protocols within customer domains to function properly, geographically separated customer sites must appear to be connected via a LAN and the provider network must be transparent.

The IEEE has reserved 33 Layer 2 MAC addresses for customer devices that operate Layer 2 protocols. If a provider bridge uses these standard MAC addresses for its Layer 2 protocols, the Layer 2 traffic of the customer devices and the service provider is mixed together. Provider bridges solve this traffic-mixing issue by providing Layer 2 protocol data unit (PDU) tunneling when a provider bridge (S-bridge) component and a provider edge bridge (C-bridge) component are used. The figure below shows the topology.

Figure 12: Layer 2 PDU Tunneling

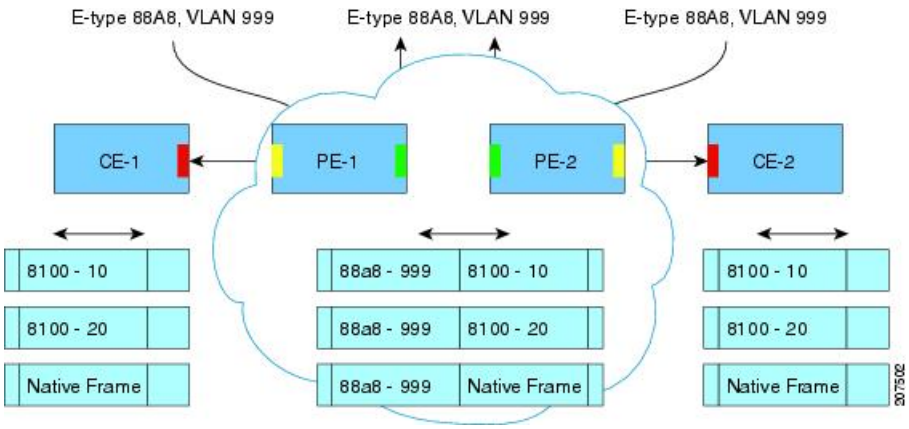

S-Bridge Component

The S-bridge component is capable of inserting or removing a service provider VLAN (S-VLAN) for all traffic on a particular port. IEEE 802.1ad adds a new tag called a Service tag (S-tag) to all ingress frames traveling from the customer to the service provider.

The VLAN in the S-tag is used for forwarding the traffic in the service provider network. Different customers use different S-VLANs, which results in isolation of traffic of each customer. In the S-tag, provider bridges do not understand the standard Ethertype. Hence, they use an Ethertype value that is different from the standard 802.1Q Ethertype value. This difference makes customer traffic that is tagged with the standard Ethertype appear as untagged in the provider network. The customer traffic is tunneled in the port VLAN of the provider port. 802.1ad service provider user network interfaces (S-UNIs) and network-network interfaces (NNIs) implement the S-bridge component.

For example, a VLAN tag has a VLAN ID of 1, the C-tag Ethertype has a value of 8100 0001, the S-tag Ethertype has a value of 88A8 0001, and the class of service (CoS) has a value of zero.

C-tag S-tag

--- ---

0x8100 | Priority bits | CFI | C-VLAN-ID 0x88A8 | Priority bits | 0 | S-VLAN-ID

--- ---

C-Bridge Component

All customer VLANs (C-VLANs) that enter a user network interface (UNI) port in an S-bridge component receive the same service (marked with the same S-VLAN). C-VLAN components are not supported, but a customer may want to tag a particular C-VLAN packet separately to differentiate between services. Provider bridges allow C-VLAN packet tagging with a provider edge bridge, called the C-bridge component of the provider bridge. C-bridge components are C-VLAN aware and can insert or remove a C-VLAN 802.1Q tag. The C-bridge UNI port is capable of identifying the customer 802.1Q tag and inserting or removing an S-tag on the packet on a per-service instance or C-VLAN basis. A C-VLAN tagged service instance allows service instance selection and identification by C-VLAN. The 801.1ad customer user network interfaces (C-UNIs) implement the C-component.

NNI Port

Dot1ad NNI port are core facing ports. On this port dot1ad (0x88A8) ethertype is used. The customer facing S-bridge port is identified by using the ethernet dot1ad nni command. The frames forwarded on this port are double tagged with the S-Tag ethertype set at. 0x88a8.

MAC Addresses for Layer 2 Protocols

Layer 2 protocol data units (PDUs) of customers that are received by a provider bridge are not forwarded. Hence, Layer 2 protocols running at customer sites do not know the complete network topology. By using different set of addresses for the Layer 2 protocols running on provider bridges, IEEE 802.1ad causes Layer 2 PDUs of the customers device that enter the provider bridge to appear as unknown multicast traffic and forwards it on customer ports (on the same service provider VLAN (S-VLAN)). Layer 2 protocols of customer device can then run transparently.

The table below shows Layer 2 MAC addresses that are reserved for the C-VLAN component.

Table 24: Reserved Layer 2 MAC Addresses for the C-VLAN Component

Assignment	Value
Bridge Group Address	01-80-C2-00-00-00
IEEE 802.3 Full Duplex PAUSE Operation	01-80-C2-00-00-01
IEEE 802.3 Slow_Protocols_Multicast_Address	01-80-C2-00-00-02
IEEE 802.1X PAE Address	01-80-C2-00-00-03
Provider Bridge Group Address	01-80-C2-00-00-08
Provider Bridge GVRP Address	01-80-C2-00-00-0D
IEEE 802.1AB Link Layer Discovery Protocol Multicast Address	01-80-C2-00-00-0E
Reserved for future standardization	01-80-C2-00-00-04 01-80-C2-00-00-05 01-80-C2-00-00-06 01-80-C2-00-00-07 01-80-C2-00-00-09 01-80-C2-00-00-0A 01-80-C2-00-00-0B 01-80-C2-00-00-0C 01-80-C2-00-00-0F

The table below shows Layer 2 MAC addresses that are reserved for the S-VLAN component. These addresses are a subset of the C-VLAN component addresses, and the C-bridge does not forward the bridge protocol data units (BPDUs) of a provider to a customer network.

Table 25: Reserved Layer 2 MAC Addresses for the S-VLAN Component

Assignment	Value
IEEE 802.3 Full Duplex PAUSE Operation	01-80-C2-00-00-01
IEEE 802.3 Slow_Protocols_Multicast_Address	01-80-C2-00-00-02
IEEE 802.1X PAE Address	01-80-C2-00-00-03
Provider Bridge Group Address	01-80-C2-00-00-08
Reserved for future standardization	01-80-C2-00-00-04 01-80-C2-00-00-05 01-80-C2-00-00-06 01-80-C2-00-00-07 01-80-C2-00-00-09 01-80-C2-00-00-0A

Bridge Protocol Data Units Destination MAC Addresses

The table summarizes the actions when a packet is received with destination MAC address for C-UNI, S-UNI and NNI interfaces.

Table 26: Destination MAC Addresses C-UNI, S-UNI and NNI Ports

MAC Address	Protocol	C-UNI Action	S-UNI Action	NNI Action
01-80-C2-00-00-00	Bridge Protocol Data Units (BPDUs)	Peer	Data	Data
01-80-C2-00-00-01	802.3X Pause Protocol	Drop	Drop	Drop
01-80-C2-00-00-02	Slow protocol address: 802.3ad LACP, 802.3ah OAM	Peer	Peer	Peer
01-80-C2-00-00-03	802.1x	Not supported	Not supported	Not supported
01-80-C2-00-00-04	Reserved for future media access method	Drop	Drop	Drop
01-80-C2-00-00-05	Reserved for future media access method	Drop	Drop	Drop
01-80-C2-00-00-06	Reserved for future bridge use	Drop	Drop	Drop

MAC Address	Protocol	C-UNI Action	S-UNI Action	NNI Action
01-80-C2-00-00-07	Reserved for future bridge use	Drop	Drop	Drop
01-80-C2-00-00-08	Provider STP (BPDU)	Drop	Drop	Peer
01-80-C2-00-00-09	Reserved for future bridge use	Drop	Drop	Drop
01-80-C2-00-00-0A	Reserved for future bridge use	Drop	Drop	Drop
01-80-C2-00-00-0B	Reserved for future S-bridge use	Drop	Drop	Drop
01-80-C2-00-00-0C	Reserved for future S-bridge purposes	Drop	Drop	Drop
01-80-C2-00-00-0D	Provider bridge Generic VLAN Registration Protocol (GVRP) address	Drop	Drop	Drop
01-80-C2-00-00-0E	802.1ab Link Layer Discovery Protocol (LLDP)	may Peer	Data	Data
01-80-C2-00-00-0F	Reserved for future C- bridge or Q-bridge use	Drop	Drop	Drop
01-80-C2-00-00-10	All bridge domains	Not supported	Not supported	Not supported
01-80-C2-00-00-20	GARP Multicast Registration Protocol (GMRP)	Data	Data	Data
01-80-C2-00-00-21	Generic VLAN Registration Protocol (GVRP)	Data	Data	Data
01-80-C2-00-00-22-2F	Other GARP addresses	Data	Data	Data

MAC Address	Protocol	C-UNI Action	S-UNI Action	NNI Action
01-00-0C-CC-CC-CC	Port Aggregation Protocol (PagP), UniDirectional Link Detection (UDLD),	Peer	Peer	Peer
	Cisco Discovery Protocol (CDP), VLAN Trunk Protocol (VTP)	Peer	Data	Data
	Dynamic Trunking Protocol (DTP)	NA	NA	NA
01-00-0C-CC-CC-CD	Per-VLAN Spanning Tree (PVST)	Peer	Data	Data

How to Configure 802.1ad

Configuring the IEEE 802.1ad on Service Instances

Note

- Only **encapsulation default** command is supported on S-UNI ports

Procedure

Step 1 **enable**

Example:

```
Router> enable
```

Enables privileged EXEC mode.

- Enter your password if prompted.

Step 2 **configure terminal**

Example:

```
Router# configure terminal
```

Enter global configuration mode.

Step 3 **interface** *interface-id*

Example:

```
Router(config)# interface gigabitethernet0/0/1
```

Enter interface configuration mode. Valid interfaces are physical ports.

Step 4 **ethernet dot1ad** {**nni** | **uni** {**c-port** | **s-port**}}

Example:

```
Router(config-if)# ethernet dot1ad nni
or
Router(config-if)# ethernet dot1ad uni c-port
or
Router(config-if)# ethernet dot1ad uni s-port
```

Configures dot1ad NNI, C-port or S-port on the interface.

Step 5 **service instance** *number* **ethernet** [*name*]

Example:

```
Router(config-if)# service instance 1 Ethernet
```

Configure an EFP (service instance) and enter service instance configuration) mode.

- The number is the EFP identifier, an integer from 1 to 4000.
- (Optional) **ethernet** name is the name of a previously configured EVC. You do not need to use an EVC name in a service instance.

Step 6 **encapsulation** {**default** | **dot1q** | **priority-tagged** | **untagged**}

Example:

```
Router(config-if-srv)# encapsulation dot1q 10
```

Configure encapsulation type for the service instance.

- **default**—Configure to match all unmatched packets.
- **dot1q**—Configure 802.1Q encapsulation. See Encapsulation for details about options for this keyword.
- **priority-tagged**—Specify priority-tagged frames, VLAN-ID 0 and CoS value of 0 to 7.
- **untagged**—Map to untagged VLANs. Only one EFP per port can have untagged encapsulation.

Step 7 **bridge-domain** *bridge-id* [**split-horizon group** *group-id*]

Example:

```
Router(config-if-srv)# bridge-domain 3000
```

Configure the bridge domain ID. The range is from 1 to 4000.

You can use the **split-horizon** keyword to configure the port as a member of a split horizon group. The *group-id* range is from 0 to 2.

Step 8 **rewrite ingress tag** { **pop** {**1** | **2**} **symmetric** | **push dot1ad** *vlan-id* [**dot1q** *vlan-id*] **symmetric**}

Example:

```
Router(config-if-srv)# rewrite ingress tag pop 1 symmetric
Router(config-if-srv)# rewrite ingress tag push dot1ad 30 symmetric
```

(Optional) Specify that encapsulation modification to occur on packets at ingress.

- **pop 1**—Pop (remove) the outermost tag.
- **pop 2**—Pop (remove) the two outermost tags.
- **symmetric—**Configure the packet to undergo the reverse of the ingress action at egress. If a tag is popped at ingress, it is pushed (added) at egress. This keyword is required for **rewrite** to function properly.
- **push**—Adds a tag to an ingress packet.
- **dot1ad** *vlan-id*—Specifies the 802.1 do1ad tag. Valid Vlan ID range is from 1 to 4094.
- **dot1q** *vlan-id*—Specifies the 802.1 do1q tag. Valid Vlan ID range is from 1 to 4094.

Step 9 **end**

Example:

```
Router(config-if-srv)# end
```

Return to privileged EXEC mode.

Configuration Examples

The example shows the C-UNI port.

```
interface GigabitEthernet0/3/7
ethernet dot1ad uni c-port
service instance 20 ethernet
encapsulation dot1q 20
rewrite ingress tag push dot1ad 30 symmetric
bridge-domain 20
```

The example shows the S-UNI port.

```
interface GigabitEthernet0/3/7
ethernet dot1ad uni s-port
service instance 20 ethernet
encapsulation default
rewrite ingress tag push dot1ad 30 symmetric
bridge-domain 20
```

The example shows the NNI port.

```
interface GigabitEthernet0/5/2
ethernet dot1ad nni
service instance 20 ethernet
encapsulation dot1ad 30
bridge-domain 20
```

Configuring the IEEE 802.1ad on Trunk EFP Service Instances

Note

- Trunk EFP is *not* supported on S-UNI ports

Procedure

Step 1 **enable**

Example:

```
Router> enable
```

Enables privileged EXEC mode.

- Enter your password if prompted.

Step 2 **configure terminal**

Example:

```
Router# configure terminal
```

Enter global configuration mode.

Step 3 **interface** *interface-id*

Example:

```
Router(config)# interface gigabitethernet0/0/1
```

Enter interface configuration mode. Valid interfaces are physical ports.

Step 4 **ethernet dot1ad** {**nni** | **uni** {**c-port**}}

Example:

```
Router(config-if)# ethernet dot1ad nni
or
Router(config-if)# ethernet dot1ad uni c-port
```

Configures Trunk EFP on dot1ad NNI and C-UNI ports on the interface.

Note Trunk EFP is *not* supported on the S-UNI port.

Step 5 **service instance** [**trunk**] *number* **ethernet**

Example:

```
Router(config-if)# service instance trunk 1 ethernet
```

Configure an EFP (service instance) and enter service instance configuration) mode

- The number is the EFP identifier, an integer from 1 to 4000
- The trunk keyword identifies the trunk ID to which the service instance is assigned.

  Note Trunk EFP (without port channel) supports encapsulation of up to 1000 Vlans.

Step 6 **encapsulation dot1q**

Example:

```
Router(config-if-srv)# encapsulation dot1q 10
```

Configure encapsulation type for the service instance.

- **dot1q**—Configure 802.1Q encapsulation.

Step 7 **bridge-domin** *bridge-id* **from-encapsulation**

Example:

```
Router(config-if-srv)# bridge-domain from-encapsulation
```

Configures the router to derive bridge domains from the encapsulation VLAN list.

Step 8 **rewrite ingress tag** { **pop** {**1** | **2**} **symmetric**

Example:

```
Router(config-if-srv)# rewrite ingress tag pop 1 symmetric
```

(Optional) Specify that encapsulation modification to occur on packets at ingress.

- **pop 1**—Pop (remove) the outermost tag.
- **pop 2**—Pop (remove) the two outermost tags.
- **symmetric—**Configure the packet to undergo the reverse of the ingress action at egress. If a tag is popped at ingress, it is pushed (added) at egress. This keyword is required for **rewrite** to function properly.

Step 9 **end**

Example:

```
Router(config-if-srv)# end
```

Return to privileged EXEC mode.

Configuration Examples

The example shows the Trunk EFP configuration on the C-UNI port.

```
interface GigabitEthernet0/3/7
ethernet dot1ad uni c-port
service instance trunk 20 ethernet
encapsulation dot1q 20-30
rewrite ingress tag pop1 symmetric
bridge-domain from-encapsulation
```

The example shows the Trunk EFP configuration on the NNI port.

```
interface GigabitEthernet0/5/2
ethernet dot1ad nni
service instance trunk 20 ethernet
encapsulation dot1ad 20-30
rewrite ingress tag pop1 symmetric
bridge-domain from-encapsulation
```

Configuring the IEEE 802.1ad on Cross-Connect on EFP

Note

- The **rewrite push** command is supported on C-UNI and S-UNI ports. Rewrite is *not* supported for NNI ports.
- Only **encapsulation default** command is supported on S-UNI ports

Procedure

Step 1 **enable**

Example:

```
Router> enable
```

Enables privileged EXEC mode.

- Enter your password if prompted.

Step 2 **configure terminal**

Example:

```
Router# configure terminal
```

Enter global configuration mode.

Step 3 **interface** *interface-id*

Example:

```
Router(config)# interface gigabitethernet0/0/1
```

Enter interface configuration mode. Valid interfaces are physical ports.

Step 4 **ethernet dot1ad** {**nni** | **uni** {**c-port** | **s-port**}}

Example:

```
Router(config-if)# ethernet dot1ad nni
or
Router(config-if)# ethernet dot1ad uni c-port
or
Router(config-if)# ethernet dot1ad uni s-port
```

Configures dot1ad NNI, C-port or S-port on the interface.

Step 5 **service instance** *number* **ethernet** [*name*]

Example:

```
Router(config-if)# service instance 1 Ethernet
```

Configure an EFP (service instance) and enter service instance configuration) mode.

- The number is the EFP identifier, an integer from 1 to 4000.

- (Optional) **ethernet** name is the name of a previously configured EVC. You do not need to use an EVC name in a service instance.

Step 6 **encapsulation** {**default** | **dot1q** | **priority-tagged** | **untagged**}

Example:

```
Router(config-if-srv)# encapsulation dot1q 10
```

Configure encapsulation type for the service instance.

- **default**—Configure to match all unmatched packets.
- **dot1q**—Configure 802.1Q encapsulation. See Encapsulation for details about options for this keyword.
- **priority-tagged**—Specify priority-tagged frames, VLAN-ID 0 and CoS value of 0 to 7.
- **untagged**—Map to untagged VLANs. Only one EFP per port can have untagged encapsulation.

Step 7 **rewrite ingress tag push dot1ad** *vlan-id* [**dot1q** *vlan-id*] **symmetric**}

Example:

```
Router(config-if-srv)# rewrite ingress tag push dot1ad 30 symmetric
```

(Optional) Specify that encapsulation modification to occur on packets at ingress.

- **symmetric—**Configure the packet to undergo the reverse of the ingress action at egress. If a tag is popped at ingress, it is pushed (added) at egress. This keyword is required for **rewrite** to function properly.
- **push**—Adds a tag to an ingress packet.
- **dot1ad** *vlan-id*—Specifies the 802.1 do1ad tag. Valid Vlan ID range is from 1 to 4094.
- **dot1q** *vlan-id*—Specifies the 802.1 do1q tag. Valid Vlan ID range is from 1 to 4094.

Step 8 **xconnect** *peer-router-id vcid* **pw-class** *pw-class name*

Example:

```
Router(config-if-srv)# xconnect 10.10.10.10 123 encapsulation mpls
```

Bind the attachment circuit to a pseudowire virtual circuit (VC) and enter cross connect configuration mode.

Step 9 **end**

Example:

```
Router(config-if-srv)# end
```

Return to privileged EXEC mode.

Configuration Examples

The example shows the C-UNI port.

```
interface GigabitEthernet0/3/7
ethernet dot1ad uni c-port
```

```
service instance 20 ethernet
encapsulation dot1q 20
rewrite ingress tag push dot1ad 30 symmetric
xconnect 10.0.0.2 20 encap mpls
```

The example shows the S-UNI port.

```
interface GigabitEthernet0/3/7
ethernet dot1ad uni s-port
service instance 20 ethernet
encapsulation default
rewrite ingress tag push dot1ad 30 symmetric
xconnect 10.0.0.2 20 encap mpls
```

The example shows the NNI port.

```
interface GigabitEthernet0/3/7
ethernet dot1ad nni
service instance 20 ethernet
encapsulation dot1ad 20
xconnect 10.0.0.2 20 encap mpls
```

Verifying IEEE 802.1ad

Use the **show ethernet do1ad**commands to verify IEEE 802.1ad configuration.

- **show ethernet do1ad**

  This command displays 802.1ad configuration globally on the router. The following is a sample output from the command:

  ```
  Router# show ethernet dot1ad

  Interface: GigabitEthernet0/2/1
  DOT1AD NNI Port
  L2protocol pass

  Interface: GigabitEthernet0/2/7
  DOT1AD C-Bridge Port
  L2protocol pass
  ```

- **show ethernet do1ad** [**inteface** *inteface-name*]

  This command displays interface dot1ad configuration The following is a sample output from the command:

  ```
  Router# show ethernet do1ad interface gigabitethernet 0/2/1

  Interface: GigabitEthernet0/2/1
  DOT1AD NNI Port
  L2protocol pass
  ```

Additional References

Related Documents

Related Topic	Document Title
Cisco IOS master command list	Cisco IOS Master Command List , All Releases

Standards

Standard	Title
No new or modified standards are supported, and support for existing standards has not been modified.	--

MIBs

MIB	MIBs Link
No new or modified MIBs are supported, and support for existing MIBs has not been modified.	To locate and download MIBs for selected platforms, Cisco IOS releases, and feature sets, use Cisco MIB Locator found at the following URL: http://www.cisco.com/go/mibs

RFCs

RFC	Title
No new or modified RFCs are supported, and support for existing RFCs has not been modified.	--

Technical Assistance

Description	Link
The Cisco Support and Documentation website provides online resources to download documentation, software, and tools. Use these resources to install and configure the software and to troubleshoot and resolve technical issues with Cisco products and technologies. Access to most tools on the Cisco Support and Documentation website requires a Cisco.com user ID and password.	http://www.cisco.com/cisco/web/support/index.html

CHAPTER 18

Configuring Latching Loopback

This chapter provides information about configuring latching loopback.

Information About Latching Loopback

Table 27: Feature History

Feature Name	Release Information	Feature Description
Latching Loopback	Cisco IOS XE Cupertino 17.8.1	Latching Loopbacks (LLs) are used for Service Activation Testing (SAT) and troubleshooting the information rate for point-to-point and multipoint services across multiple Carrier Ethernet Networks (CENs). Thus, eliminate the need for a peer to interoperate with the Service Provider for SAT. You can configure latching loopback on an interface. Latching loopback supports the following features on RSP3 module: • Internal and external loopbacks for a port. • Latching loopback states such as prohibited, inactive, and active. • Connectivity Fault Management (CFM) in both upward and downwards direction on an interface. • Latching loopback activation and deactivation on a service instance.

Latching Loopbacks (LLs) are used for Service Activation Testing (SAT) and troubleshooting up to the information rate for point-to-point and multipoint services across multiple Carrier Ethernet Networks (CENs). The Ethernet Test Head in the Service Provider's network initiates the Latching Loopback in the Access Provider's NID and then perform end-to-end testing based on IETF RFC-2544 (9), ITU Y.1564 (10), or SAT (MEF 46). The Latching Loopback eliminates the need for peer to interoperate with the Service Provider for SAT.

The Latching Loopback Function (LLF) is deployed in the UNI and ENNI locations in various Carrier Ethernet equipments such as Network Interface Devices (NIDs), bridges, switches, and Ethernet Test Equipment (ETE). The Ethernet Equipment that implements the Latching Loopback Function is referred as a Latching Loopback Device (LLD).

The Latching Loopback Controller that provides an inline control of the Latching Loopback State Machine (LLSM) initiates latching loopback to a Latching Loopback Responder, and supplies the Ethernet frames to be looped back by the Latching Loopback Responder.

The Latching Loopback Responder executes latching loopback at an External Interface (EI) in a Latching Loopback Function (LLF), at the boundary between a CEN and an External Network.

The Latching Loopback is used within a system that consists of the Ethernet Test Equipment (ETE) that acts as a Latching Loopback Controller; the CEN that forwards the Latching Loopback Messages (LLMs), the Latching Loopback Replies (LLRs), and the Ethernet frames that are looped back; and the Network Element (NE) or ETE acting as a Latching Loopback Responder that incorporates the EI with an LLF.

The controller node sends LLM and the responder node sends LLR.

Latching Loopback Support (per MEF 46) for RSP3

Latching Loopback Directions

The Latching Loopback supports two directions for a port; the internal loopbacks and the external loopbacks for a port.

In both directions, the LLSM uses an LLF within the LLD implementing the port being looped back. The Loopback Activate messages received through an Up MEP correspond to internal loopbacks and the messages received through a Down MEP correspond to external loopbacks. The messages received at a MIP correspond to either an internal or external loopback depending on which direction the activate messages are received.

The Latching loopback direction depends on the MEP direction:

- UP—MEP refers to the Internal direction
- Down—MEP refers to the External direction

The LLSM is associated with a single MEP only and can activate the corresponding direction of loopback alone.

The controller should be MEP and the responder may be an MEP or MIP.

Latching Loopback State

The LLSM has three states:

- Latching Loopback Prohibited—Loopbacks are prohibited by an administrative action. LLMs addressed to a specific LLSM are discarded.
- Latching Loopback Inactive—Loopbacks are permitted, but there is no loopback request currently active.
- Latching Loopback Active—The loopback is currently active.

Restrictions for Latching Loopback

- Latching loopback is supported only on the RSP2 module.

  Starting with the Cisco IOS XE Cupertino 17.8.1 release latching loopback is supported on the RSP3 module.

- Latching loopback is not supported for LAG interface.
- 802.1ad is not supported in latching loopback.
- Latching loopback is not supported on the Trunk EFP.
- The latching loopback should be applied for each interface or EFP.
- While configuring the latching loopback, the interface should be in the administrative UP state for UP-MEP sessions.
- The second dot1q filter double tag encapsulation option is not supported as ACL TCAM entries does not have option to store the second VLAN. If the second VLAN is configured in latching loopback, then the existing ELB is configured instead of latching loopback.
- ACL is not supported on an EFP when latching loopback is active.
- Only Ethernet frames are used as loopable frames for facility loopback as L2 ACLs are used to support latching loopback behavior.
- The destination MAC address can be unicast, multicast, or broadcast address whereas the source MAC address should be the interface MAC address where the latching loopback is configured. The source MAC address cannot be replaced with any other MAC address.
- Frames with the looping source MAC address and VLAN coming from the opposite direction to the request are forwarded and not discarded, whereas MEF 46 expects frames with same Source MAC and VLAN coming from opposite direction to be discarded. This behavior is similar to existing Ethernet data plane Loopback.
- The normal MIP cannot be configured at ingress port of responder interface, however, if the MIP is configured as a responder at the ingress port, then you can configure the normal MIP as the egress port.
- If both the MIP and MEP are configured as responder in the MA and send LLR back to controller, then the MEP takes precedence and becomes a responder since it is at the endpoint of the MA. To configure MIP to be a responder, you must remove responder configuration from the MEP.
- The latching loopback can be verified only on SADT packets with ethertype of 0XFFFF. The latching loopback cannot be verified for IXIA traffic packets.
- In latching loopback, IPSLA for untagged and default EFP delay and jitter is not supported, since the values for delay and jitter are in milliseconds.

Restrictions for Latching Loopback on RSP3 Module

- A total number of 16 latching loopback sessions are supported per router, in which 8 can be terminal and 8 can be facility sessions.
- The latching loopback sessions can be on the same or different interfaces.
- One latching loopback session per EFP is supported. The port-based LLB is not supported.
- The LLB is applicable to all VLANs configured in EFP. Filtering based on specific VLAN is not supported.
- Latching loopback on routed port infrastructure is not supported.
- IP packets are looped back with MAC swap but RSP3 does not support IP swap. If packet comes with source MAC address and destination IP address same as BDI MAC and IP address, then the packet is punted and is not looped back. If any Layer 3 packet to be routed, then this packet is looped back.

- Ethertype, source MAC address, VLAN, COS, and llc-oui-based loopback traffic filtering are not supported.
- Latching Loopback sessions cannot be initiated on a port that is configured with SPAN or RSPAN.
- Data filtering for the traffic coming in the opposite direction of loopback is not enforced.
- In TEFP, if BDI is configured, traffic with VLAN, which is a part of BDI, is not looped back. Any other traffic for TEFP, which is not part of BDI, is looped back based on filters. This limitation is applicable for both types of LLB.
- Latching loopback and ELB are supported only on the same EFP.
- In facility latching loopback, port shaper cannot be bypassed.
- Facility and terminal LLB are not supported on DOT1ad NNI interface.
- When the service name is in the number format, then ensure that you configure the ID as null, for example:

```
ethernet cfm domain ninil level 0
id null
service number 1234 evc green1 vlan 102 direction down
```

- For an offload session, the domain name should be of only a five-character limit.
- The latching loopback session ID starts from 33 as the IDs ranging 1–32 are already reserved for ELB.

Configuring Latching Loopback on an Interface

Configure CFM in the downward direction:

```
Router#configure terminal
Router(config)#ethernet cfm ieee
Router(config)#ethernet cfm global
Router(config)#ethernet evc evc700
Router(config-evc)#ethernet cfm domain MD7 level 7
Router(config-ecfm)#service MA7 evc evc700 vlan 700 direction down
Router(config-ecfm-srv)#continuity-check
Router(config-ecfm-srv)#continuity-check interval 3.3ms
Router(config-ecfm-srv)#end
```

Configure CFM in an upward direction:

```
Router#configure terminal
Router(config)#ethernet cfm ieee
Router(config)#ethernet cfm global
Router(config)#ethernet evc evc700
Router(config-evc)#ethernet cfm domain MD7 level 7
Router(config-ecfm)#service MA7 evc evc700 vlan 700
Router(config-ecfm-srv)#continuity-check
Router(config-ecfm-srv)#continuity-check interval 3.3ms
Router(config-ecfm-srv)#end
```

Note Alternatively, you can add the **number** keyword followed by an argument in the **service** command as shown in the following example:

```
Router(config-ecfm)#service number 10 evc evc700 vlan 700 direction down
```

Configure LLF controller:

```
Router#configure terminal
Router(config-evc)#interface GigabitEthernet0/0/0
Router(config-if)#service instance 1 ethern evc700
Router(config-if-srv)#encapsulation dot1q 777
Router(config-if-srv)#bridge-domain 700
Router(config-if-srv)#cfm mep domain MD7 mpid 70
Router(config-if-srv-ecfm-mep)#exit
Router(config-if-srv)#cfm latching-loopback domain MD7
Router(config-if-srv-ecfm-ll)#controller discover-interval 1
Router(config-if-srv-ecfm-ll)#end
```

Configure LLF responder MEP:

```
Router#configure terminal
Router(config-evc)#interface GigabitEthernet0/0/0
Router(config-if)#service instance 1 ethern evc700
Router(config-if-srv)#encapsulation dot1q 777
Router(config-if-srv)#bridge-domain 700
Router(config-if-srv)#cfm mep domain MD7 mpid 71
Router(config-if-srv-ecfm-mep)#exit
Router(config-if-srv)#cfm latching-loopback domain MD7
Router(config-if-srv-ecfm-ll)#responder
Router(config-if-srv-ecfm-ll)#end
```

Configure LLF responder MIP:

```
Router#configure terminal
Router(config-evc)#interface GigabitEthernet0/0/0
Router(config-if)#service instance 1 ethern evc700
Router(config-if-srv)#encapsulation dot1q 777
Router(config-if-srv)#bridge-domain 700
Router(config-if-srv)#cfm mip level 7
Router(config-if-srv-ecfm-mep)#exit
Router(config-if-srv)#cfm latching-loopback domain MD7
Router(config-if-srv-ecfm-ll)#responder
Router(config-if-srv-ecfm-ll)#end
```

Activating Latching Loopback for a Service Instance

Table 28: Feature History

Feature Name	Release Information	Feature Description
Support for Number Format in Maintenance Association (MA) Name	Cisco IOS XE Cupertino 17.8.1	This feature supports the MA number format to be passed as an argument to the service keyword in the latching loopback activate and deactivate commands on the RSP3 module. The valid range is from 0 through 65535.

A device sends the LL activate request message to the responder, which triggers the LLSM for the tuple {port, LLFS, SA}. The expiry timer can be configured for the loopback session and the default expiry timer is 5 mins.

Configure the interface where you intend to initiate loopback.

The service instance and the direction should also be configured.

Starting from Cisco IOS XE Cupertino 17.8.1, you can pass the MA number format as an argument to the service keyword in the latching loopback activate command on the RSP3 module. Prior to Release 17.8.1, this feature was supported only on the RSP2 module.

```
Router> enable
Router# ethernet latching-loopback activate {domain | mpid | service {short-ma-name | number}
 | destination | timeout}
```

Example

```
Router> enable
Router# ethernet latching-loopback activate domain kar mpid 8000 service number 10 destination
 mac-address aabb.cc00.7600 timeout 300
```

Deactivating Latching Loopback for a Service Instance

The LL deactivate request message is used to stop the current active loopback session.

From Cisco IOS XE Cupertino Release 17.8.1, you can pass the MA number format as an argument to the service keyword in the latching loopback deactivate command on the RSP3 module. Prior to Release 17.8.1, this feature was supported only on the RSP2 module.

```
Router> enable
Router# configure terminal
Router(config)#ethernet latching-loopback deactivate {domain | mpid | service short-ma-name
 or ma-number | destination}
```

Example

```
Router> enable
Router# ethernet latching-loopback deactivate domain kar mpid 8000 service number 10
destination mac-address aabb.cc00.7600
```

Verifying the Latching Loopback Configuration

Use the **show ethernet cfm latching-loopback discover-phase mep | mip domain domain name** command to display the CFM LL discover details and the latching loopback responder details.

For the controller MEP, the following example displays the CFM latching loopback session and responder details:

```
show ethernet cfm latching-loopback discover-phase mep domain MD7 detail

LL Session : 1
===============
Domain Name : MD7
MA Name : MA7
MPID : 70
Interface : Te0/0/3
Level : 7
Service Instance: 1

Latching Loopback Session Details
=================================
Latching Loopback Device : Controller
Latching Loopback Discover interval : 1 min(s)
Latching Loopback Controller MAC : 84b8.022d.a503

Latching Loopback Responder Device Details
==========================================
Responder Device Mac Address : 64f6.9d67.ae0a
Responder Device LLSM State : INACTIVE
Responder Device Keepalive Status : Alive

Latching Loopback Message Counters
==================================
LL Discovery Request Sent : 980
LL Discovery Reply Recv : 977
```

For the controller MEP, the following example displays the CFM latching loopback session and responder details:

```
show ethernet cfm latching-loopback discover-phase mep domain MD7 detail

LL Session : 1
===============
Domain Name : MD7
MA Name : number 10
MPID : 70
Interface : Te0/0/3
Level : 7
Service Instance: 1

Latching Loopback Session Details
=================================
Latching Loopback Device : Controller
Latching Loopback Discover interval : 1 min(s)
```

```
Latching Loopback Controller MAC : 84b8.022d.a503

Latching Loopback Responder Device Details
==========================================
Responder Device Mac Address : 64f6.9d67.ae0a
Responder Device LLSM State : INACTIVE
Responder Device Keepalive Status : Alive

Latching Loopback Message Counters
==================================
LL Discovery Request Sent : 980
LL Discovery Reply Recv : 977
```

For the responder MIP, the following example displays the CFM latching loopback session and responder details:

```
Router#show ethernet cfm latching-loopback discover-phase mip detail
LL Session : 1
================
Domain Name     :  MD7
Interface       :  Gi0/0/3
Level           :  7
Service Instance:  1
 Latching Loopback Session Details
==================================
Latching Loopback Device        :   Responder
Latching Loopback Message Counters
==================================
LL Discovery Request Recv       :   8
LL Discovery Reply   Sent       :   8
```

For the responder MEP, the following example displays the CFM latching loopback session and responder details:

```
Router#show ethernet cfm latching-loopback discover-phase mep domain MD7 detail
LL Session : 1
===============
Domain Name     :  MD7
MA Name         :  MA7
MPID            :  71
Interface       :  Gi0/0/0
Level           :  7
Service Instance:  1
 Latching Loopback Session Details
 ==================================
 Latching Loopback Device        :   Responder
 Latching Loopback Message Counters
 ==================================
 LL Discovery Request Recv       :   2
 LL Discovery Reply   Sent       :   2
```

For the responder MEP, the following example displays the CFM latching loopback session and responder details:

```
Router#show ethernet cfm latching-loopback discover-phase mep domain MD7 detail
LL Session : 1
===============
Domain Name     :  MD7
MA Name         :  number 10
MPID            :  71
Interface       :  Gi0/0/0
Level           :  7
Service Instance:  1
 Latching Loopback Session Details
 ================================
 Latching Loopback Device        :   Responder
 Latching Loopback Message Counters
 ==================================
 LL Discovery Request Recv       :   2
 LL Discovery Reply   Sent       :   2
```

Use the **show ethernet cfm latching-loopback active brief interface** and **show ethernet cfm latching-loopback active brief interface <interface> service instance <number>** commands to to display the CFM LL active session details with all the session parameters.

This example shows how to display the CFM LL active session details for external:

```
Router#show ethernet cfm latching-loopback active interface GigabitEthernet0/0/0 service
instance 1
============================================================
Loopback Session ID     : 1
Interface               : GigabitEthernet0/0/0
Service Instance        : 1
Direction               : External
Time out(sec)           : none
Status                  : on
Start time              : 23:01:46.422 IST Wed Aug 30 2017
Time left               : N/A
Dot1q/Dot1ad(s)         : 777
Second-dot1q(s)         :
Source Mac Address      : 84b8.022d.ab80
Destination Mac Address : 84b8.022d.a880
Ether Type              : 0x0
Class of service        : 0
Llc-oui                 : 0x0
Total Active Session(s): 1
Total Internal Session(s): 0
Total External Session(s): 1
```

Configuration Examples for Configuring Latching Loopback

Initialize latching loopback functionality.

```
Router> enable
Router# configure terminal
Router(config)# interface gigabitethernet 0/2/1
Router(config)# service instance 1 ethernet
Router(config)# encapsulation dot1q 100
Router(config)# bridge-domain 120
Router(config)# cfm mep domain kar mpid 8000
```

```
Router(config)# exit
Router(config)# cfm latching-loopback domain kar
Router(config)# controller discover-interval <in secs> <default 2 secs>
Router(config)#end
```

Initialize latching loopback functionality in the responder device. This will respond to the incoming latching loopback request messages.

```
Router> enable
Router# configure terminal
Router(config)# ethernet cfm ieee
Router(config)# ethernet cfm global
Router(config)# ethernet cfm domain kar level 0
Router(config)# service red evc green vlan 101 direction down
Router(config)# continuity-check
Router(config)# ethernet cfm logging alarm ieee
Router(config)# ethernet cfm logging alarm cisco
Router(config)# ethernet evc green
Router(config)# interface Ethernet0/0
Router(config)# no sh
Router(config)# no ip address
Router(config)# service instance 500 ethernet green
Router(config)# encapsulation dot1q any
Router(config)# bridge-domain 101
Router(config)# cfm mep domain kar mpid 8001
Router(config)# exit
Router(config)# cfm latching-loopback domain kar
Router(config)# responder
```

```
Router> enable
Router# configure terminal
Router(config)# ethernet cfm ieee
Router(config)# ethernet cfm global
Router(config)# ethernet cfm domain kar level 0
Router(config)# service number 10 evc green vlan 101 direction down
Router(config)# continuity-check
Router(config)# ethernet cfm logging alarm ieee
Router(config)# ethernet cfm logging alarm cisco
Router(config)# ethernet evc green
Router(config)# interface Ethernet0/0
Router(config)# no sh
Router(config)# no ip address
Router(config)# service instance 500 ethernet green
Router(config)# encapsulation dot1q any
Router(config)# bridge-domain 101
Router(config)# cfm mep domain kar mpid 8001
Router(config)# exit
Router(config)# cfm latching-loopback domain kar
Router(config)# responder
```

```
Router# ethernet latching-loopback activate domain kar mpid 8000 service number 10 destination
 mac-address aabb.cc00.7600 timeout 300
```