

CP Geographical Redundancy

- Feature Summary , on page 1
- Revision History, on page 2
- Feature Description, on page 2
- Prerequisites for CP-GR Cluster Bring Up, on page 2
- CP-GR Network Slicing Requirements, on page 4
- Architecture, on page 8
- Active-Active GR Deployment, on page 9
- MED Value, on page 11
- Geo Redundancy Support for AIO Control Plane Cluster, on page 12
- Geographical redundancy for L2TP sessions, on page 14
- GR-Replication Pod, on page 17
- ETCD and Cache Pod Replication , on page 18
- Pod Monitoring, on page 19
- Traffic Monitoring , on page 19
- Instance Roles , on page 21
- Automated standby-state recovery, on page 22
- IPAM, on page 23
- Limitations and Restrictions, on page 23
- Configuring CP Geo-Redundancy, on page 24
- Key Performance Indicators (KPIs), on page 45
- Monitoring and Troubleshooting, on page 48

Feature Summary

Table 1: Summary Data

Applicable Product(s) or Functional Area	cnBNG
Applicable Platform(s)	SMI
Feature Default Setting	Disabled – Configuration Required
Related Changes in this Release	First Release

Related Documentation	Not Applicable

Revision History

Table 2: Revision History

Revision Details	Release
Introduced support for automated standby-state recovery.	2025.02.0
Introduced CP Geo Redundancy support for PPPoE sessions.	2025.01.0
Introduced CP Geo Redundancy support for AIO Control Plane Cluster.	2024.03.0
Introduced Traffic Monitoring functionality for CP-GR sites.	2024.03.0
Introduced support for cnBNG to prepend the AS-path attribute to BGP Virtual IP (VIP) routes.	2024.02.0
Introduced support for BGP IPv6 route advertisement and IPv6 neighbor peering.	2024.02.0
First introduced.	2024.01.0

Feature Description

CP Geographical redundancy provides protection to the cnBNG Control Plane site against service failures that occur due to natural disasters or massive system outages such as power failures. CP Geo redundancy takes place through replication of sessions, and any other data required for seamless failover and failback of services to the remote site.



Note CP Geo redundancy feature is supported for IPoE and PPPoE sessions.

Prerequisites for CP-GR Cluster Bring Up

The following are prerequisites for bringing up the CP-GR cluster:

- You can use either Cluster Manager (CM) or Inception server to bring up CP-GR K8s cluster.
- The CIMC subnet of servers must be reachable from Inception or CM.
- The management VLAN can use /28 or /24 subnet masks on Modular LAN On Motherboard (MLOM) bond.
- The customer network can use /29 subnet mask on PCIe bond.

- You can use the number of servers depending on the scale requirements. You need a minimum of three servers per site for the CP-GR cluster to achieve both cluster and local level redundancy.
- You can use a firewall based on your deployment requirement.
- You can use UCS C220M6 or M7SX servers.

Port Connections per CP-GR Site

The following diagram illustrates the port connections per CP-GR site.

Figure 1: Port Connectivity per CP-GR Site

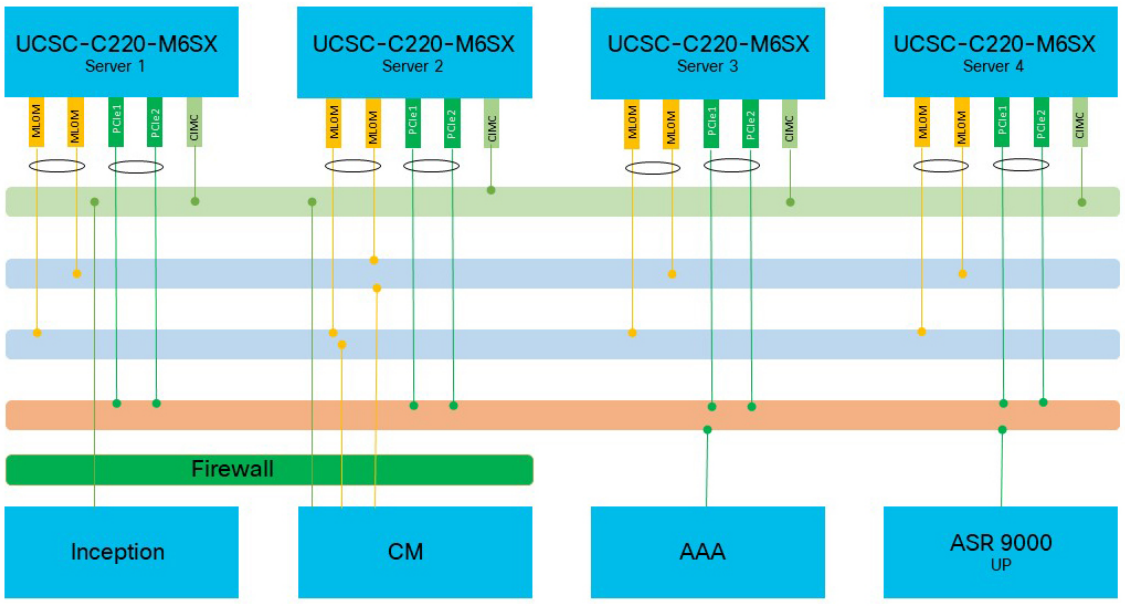

Physical Connections per CP-GR Site

The following diagram illustrates the physical connections per CP-GR site.

Figure 2: Physical Connections per CP-GR Site

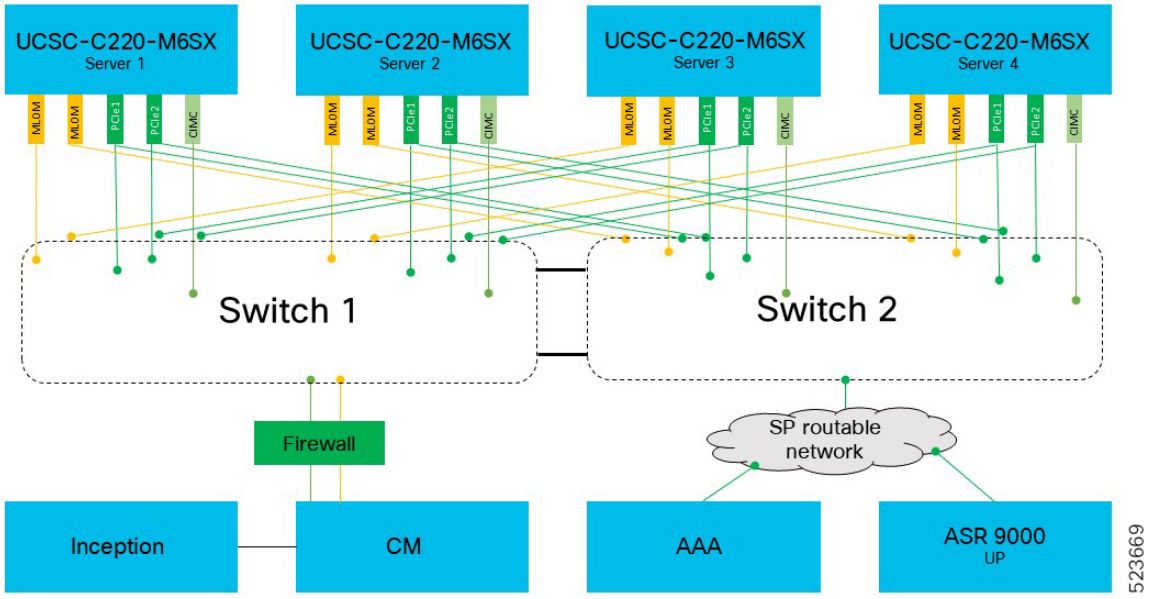

CP-GR Network Slicing Requirements

The following are the CP-GR network slicing requirements:

- You can use VLANs as per your network requirements.
- You can use the same or different VLANs between CP-GR sites.
- VLANs and addresses such as cdl vips, udp vips, and inittcp vips must be reachable from the other site of CP-GR cluster.
- You can use VLANs on different port bundles as mentioned in the following network slicing example.

Sample Network Slicing Details - Site 1

Site 1							
Type	**Description**	**Node**	**Physical Interface**	**Logical Interface**	**VLAN**	**Physical IP**	**Vip IP if any**
BGP	bgp between proto1 and leaf1 server-1	proto1/svr1	enp94s0f0	enp94s0f0.151	151	10.1.1510.1/29	N.A
	bgp between proto1 and leaf2 server-1	proto1/svr1	enp216s0f0	enp216s0f0.152	152	10.1.152.1/29	N.A
	bgp between proto2 and leaf1 server-2	proto2/svr4	enp94s0f0	enp94s0f0.151	151	10.1.151.2/29	N.A
	bgp between proto2 and leaf2 server-2	proto2/svr4	enp216s0f0	enp216s0f0.152	152	10.1.152.2/29	N.A
N4 External VIP	N4 VIP. External VIP	proto1/svr1	bd2	bd2.n4.161	161	10.1.1610.1/29	N4 Site 1 - 209.165.200.1/32 N4 Site 209.165.200.2/32 You can use different addresses
		proto2/sv4	bd2	bd2.n4.161	161	10.10.161.2/29	
N4 Internal VIP	N4 Internal VIP	proto1/svr1	bd2	bd2.intudp.163	163	10.1.163.1/29	10.1.163.100/32
		proto2/svr4	bd2	bd2.intudp.163	163	10.1.163.2/29	
Geo	Geo POD: Active/Standby Internal and External VIP. Grouping required for both	proto1/svr1	bd1	bd1.inttcp.164	164	10.1.164.1/29	Internal: 10.1.164.100/32 Ext: 10.1.164.101/32 You can use different addresses
		proto2/svr4				10.1.164.2/29	
		svr2				10.1.164.3/29	
		svr3				10.1.164.4/29	

Site 1							
Type	**Description**	**Node**	**Physical Interface**	**Logical Interface**	**VLAN**	**Physical IP**	**Vip IP if any**
CDL	CDL services	svr-2	bd1	bd1.cdl.165	165	10.1.165.1/29	CDL: 10.1.165.100, Kafka1: 10.1.165.101, Kafka2: 10.1.165.102. You can use different addresses
		svr-3	bd1	bd1.cdl.165	165	10.1.165.2/29	
K8s mgmt	K8s Management IP address VLAN 125	Primary1	eno5 & eno6	bd0.k8s.125	125	10.100.3.1/28	10.1.125.10/28 gw-10.1.125.101 You can use different addresses
		Primary2	eno5 & eno6	bd0.k8s.125	125	10.100.3.2/28	
		Primary3	eno5 & eno6	bd0.k8s.125	125	10.100.3.3/28	
		worker1	eno5 & eno6	bd0.k8s.125	125	10.100.3.4/28	
mgmt	Management IP address	Primary1	eno5 & eno6	bd0.mgmt.325	325	10.100.2.11/28	10.100.2.10/24 You can use different addresses
		Primary2	eno5 & eno6	bd0.mgmt.325	325	10.100.2.12/28	
		Primary3	eno5 & eno6	bd0.mgmt.325	325	10.100.2.13/28	
		worker1	eno5 & eno6	bd0.mgmt.325	325	10.100.2.14/28	

Sample Network Slicing Details - Site 2

Site-2							
Type	**Description**	**Node**	**Physical Interface**	**Logical Interface**	**VLAN**	**Physical IP**	**Vip IP if any**
BGP	bgp between proto1 and leaf1 server-1	proto1/svr1	enp94s0f0	enp94s0f0.151	151	10.2.151.1/29	N.A
	bgp between proto1 and leaf2 server-1	proto1/svr1	enp216s0f0	enp216s0f0.152	152	10.2.152.1/29	N.A
	bgp between proto2 and leaf1 server-2	proto2/svr4	enp94s0f0	enp94s0f0.151	151	10.2.151.2/29	N.A
	bgp between proto2 and leaf2 server-2	proto2/svr4	enp216s0f0	enp216s0f0.152	152	10.2.15102/29	N.A
N4 External VIP	N4 VIP. External VIP	proto1/svr1	bd2	bd2.n4.161	161	10.2.161.1/29	N4 Site 1- 209.165.200.1/32 N4 Site 2- 209.165.200.2/32
		proto2/sv4	bd2	bd2.n4.161	161	10.2.161.2/29	
N4 Internal VIP	N4 Internal VIP	proto1/svr1	bd2	bd2.intudp.163	163	10.2.163.1/29	10.2.163.200/32
		proto2/svr4	bd2	bd2.intudp.163	163	10.2.163.2/29	
Geo	Geo POD: Active/Standby Internal and External VIP. Grouping required for both	proto1/svr1	bd1	bd1.inttcp.164	164	10.2.164.1/29	Internal: 10.2.164.200/32 Ext: 10.2.164.201/32 You can use different addresses
		proto2/svr4				10.2.164.2/29	
		svr2				10.2.164.3/29	
		svr3				10.2.164.4/29	
CDL	CDL services	svr-2	bd1	bd1.cdl.165	165	10.2.165.1/29	CDL: 10.2.165.200, Kafka1: 10.2.165.201, Kafka2: 10.2.165.202
		svr-3	bd1	bd1.cdl.165	165	10.2.165.2/29	

Site-2							
Type	**Description**	**Node**	**Physical Interface**	**Logical Interface**	**VLAN**	**Physical IP**	**Vip IP if any**
K8s Management	K8s Management IP address VLAN 125	Primary1	eno5 & eno6	bd0.k8s.125	125	10.200.3.1/28	10.2.126.10/28 gw-10.2.126.101 You can use different addresses
		Primary2	eno5 & eno6	bd0.k8s.125	125	10.200.3.2/28	
		Primary3	eno5 & eno6	bd0.k8s.125	125	10.200.3.3/28	
		worker1	eno5 & eno6	bd0.k8s.125	125	10.200.3.4/28	
Management	Management IP address	Primary1	eno5 & eno6	bd0.mgmt.325	325	10.100.2.14/28	10.100.2.20/24 You can use different addresses
		Primary2	eno5 & eno6	bd0.mgmt.325	325	10.100.2.15/28	
		Primary3	eno5 & eno6	bd0.mgmt.325	325	10.100.2.16/28	
		worker1	eno5 & eno6	bd0.k8s.125	325	10.100.2.16/28	

Architecture

The following figure shows two sites with cnBNG cluster that is connected to the spine-leaf BGP core network.

Figure 3: cnBNG CP Geo Redundancy Architecture

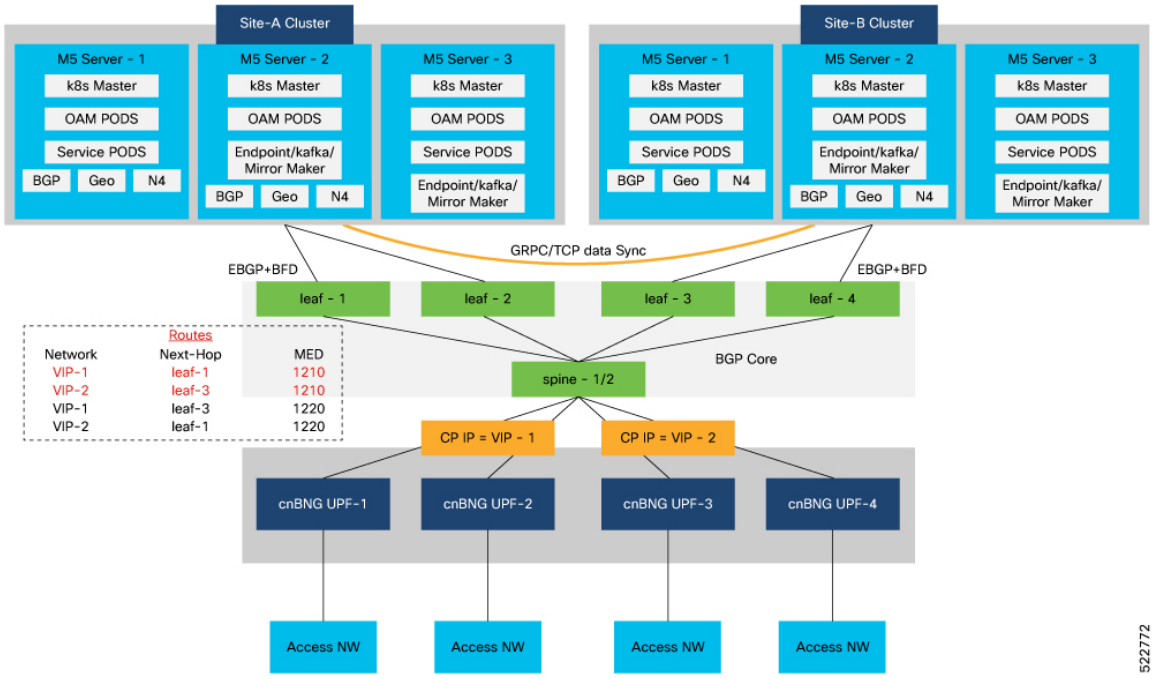

Each cnBNG cluster runs BGP and Geo redundancy pods on Protocol node. The protocol node provides high availability using active-standby topology.

BGP speaker pod runs on protocol node where the BGP routing protocol is hosted. It also runs BFD protocol for detecting BGP link failures.

The following sequence of steps set up the BGP speaker pods:

- The BGP speaker pods use TCP as the transport protocol, on port 179. These pods use the AS number that is configured in the Ops Center CLI.
- Connection is established with all the BGP peers provided by the Ops Center CLI.
- All VIP IP addresses of endpoints, which are configured in the Ops Center CLI are published.
- The import policies for routing are configured using CLI configuration.
- Similar to the cache pod, two BGP speaker pods run on each Namespace as Active-Active.

Active-Active GR Deployment

The following figure illustrates the dynamic routing of Active-Active GR deployment, consisting of site A and site B.

Figure 4: Site A

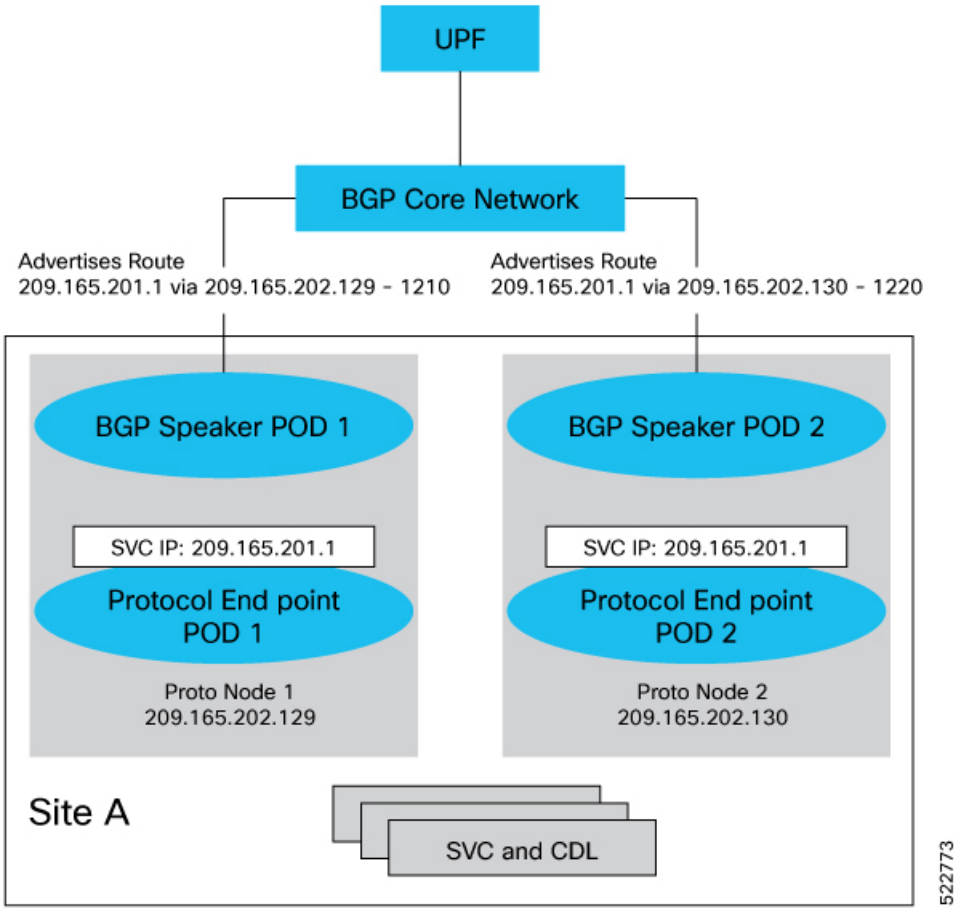

The Service IP address 209.165.201.1 is configured on both the nodes 209.165.202.129 and 209.165.202.130. POD1 is running on host 209.165.202.129 and POD2 on 209.165.202.130. The host IP address exposes the pod services. BGP speaker publishes the route 209.165.201.1 through 209.165.202.129 and 209.165.202.130. It also publishes the MED values 1210 and 1220 to determine the priority of pods.

Figure 5: Site B

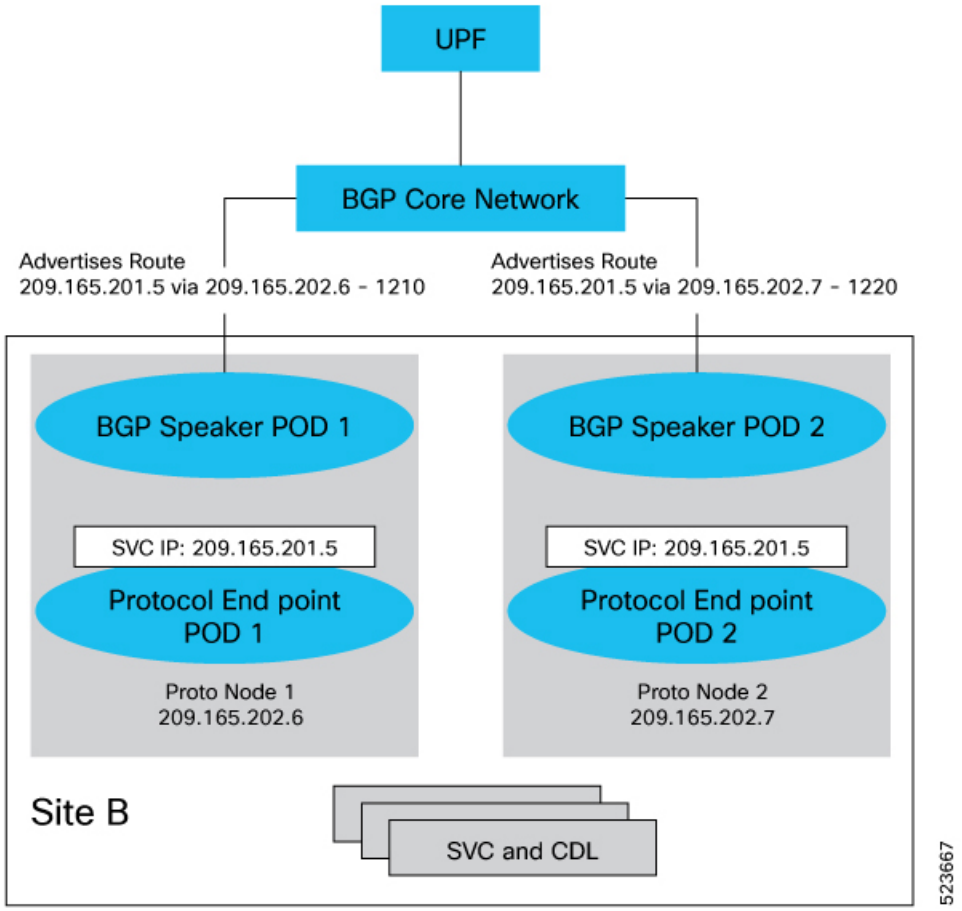

MED Value

The Local Preference is used only for IGP neighbours, whereas the Multi Exit Discriminator (MED) Attribute is used only for EGP neighbours. A lower MED value is the preferred choice for BGP.

Table 3: For Primary Role:

Bonding Interface Active	VIP Present	MED Value	Local Preference
Yes	Yes	1210	100
Yes	No	1220	100
No	Yes	1215	100
No	No	1225	100

Table 4: For Standby Role:

Bonding interface active	VIP present	MED value	Local Preference
Yes	Yes	2210	100
Yes	No	2220	100
No	Yes	2215	100
No	No	2225	100

Table 5: For Non Primary/Standby Role:

Bonding interface active	VIP present	MED value	Local Preference
NA	NA	3220	100

BGP Speaker POD periodically checks the VIP status, and Active interface of bonded interface on Protocol node. If a change is detected, then the BGP re-advertises routes based on the VIP/bonded interface state.

Geo Redundancy Support for AIO Control Plane Cluster

Table 6: Feature History

Feature Name	Release Information	Description
Geo Redundancy Support for AIO Control Plane Cluster	2024.03.0	This feature provides higher service availability using Geographical Redundancy for cnBNG all-in-one (AIO) Control Plane clusters, reducing the risk of outages. CP-GR feature, previously available for 3-server and 4-server clusters, has been expanded to include AIO clusters.

The implementation of Geographical redundancy on AIO control plane clusters allows for continuous operation even if one AIO Control Plane cluster experiences a failure, maintaining uninterrupted services.

Architecture

This figure shows two sites with cnBNG AIO Control Plane cluster that is connected to the spine-leaf BGP core network.

Figure 6: AIO CP Geo Redundancy Architecture

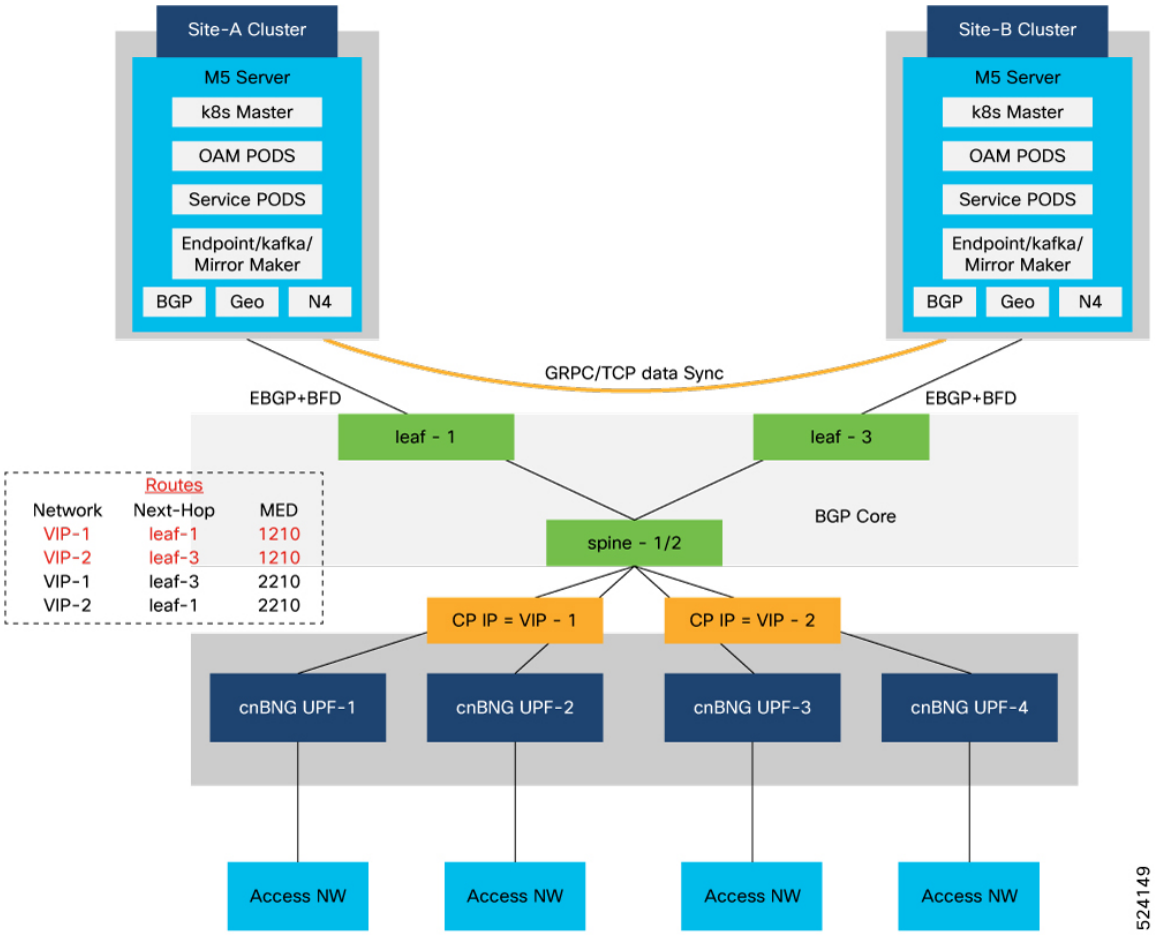

Each AIO cluster runs a single instance of BGP-Speaker pod and Geo-Replication pod.

You can use a single server to achieve GR functionality on an AIO CP cluster.

The BGP-Speaker pod is equipped with BGP routing protocol and BFD protocol, providing rapid BGP link failure detection to maintain uninterrupted network connectivity. It establishes secure connections with all BGP peers as per the user-defined configuration, fostering a reliable routing environment.

Furthermore, the BGP-Speaker pod dynamically publishes IPv4 and IPv6 Virtual IP addresses (VIPs) of endpoints, facilitating efficient network traffic management. It also imports and enforces routing policies based on the configuration settings.

CP-GR Switchover Scenarios

The scenarios that can trigger CP-GR switchover on an AIO cluster are:

- Pod monitoring failure
- BGP/BFD monitoring failure
- POD restart of bgpspeaker-pod
- POD restart of georeplication-pod

- Traffic monitoring failure, and
- Manual switchover using **geo switch-role** command.

Active-Active GR Deployment

The BGP speaker advertises Service IP addresses to manage incoming traffic from both the sites (site A and site B).

eBGP is configured between the AIO-site Control Plane and the Leaf switches, and iBGP is set up between Leaf1/2 and Spine switches. The use of Local Preference within iBGP neighbors allows for precise internal traffic prioritization, while the MED Attribute for eBGP neighbors dictates external routing preferences.

Routes advertised with a lower MED value are preferred in the BGP selection process, guiding traffic towards the most efficient path.

Geographical redundancy for L2TP sessions

Geographical redundancy for L2TP sessions is a solution for service providers that

- extends existing control plane geographical redundancy (CP-GR) to L2TP tunnels and sessions
- helps maintain session continuity and service availability during control plane (CP) failover events, and
- enables seamless failover and recovery of L2TP tunnels and sessions without manual intervention.

This feature supports the same redundancy capabilities previously available for IPoE and PPPoE, now extended to L2TP sessions. When a CP failover occurs, the system synchronizes critical state information to ensure that L2TP tunnels and sessions remain operational, minimizing service disruption for end users.

Table 7: Feature History

Feature Name	Release Information	Description
Geographical redundancy for L2TP sessions	2025.04.0	You can now maintain L2TP subscriber sessions without disruption during control plane failover using control plane geographical redundancy (CP-GR). When a failover occurs, the control plane automatically synchronizes critical L2TP tunnel and session state with the user plane, allowing tunnels and sessions to continue seamlessly.

Limitations of configuring geographical redundancy for L2TP sessions

- Do not reload or upgrade the User Plane while L2TP tunnels and sessions are active. Reloading or upgrading will disconnect all active tunnels and sessions.
- L2TP LAC sessions can be established over a SRG, but these sessions are disconnected after an SRG switchover.
- OpenShift deployment is currently not supported.

Configure CP-GR support for L2TP tunnels and sessions

Enable geographical redundancy (GR) for L2TP tunnels and sessions on the User Plane to support failover protection across remote sites.

Procedure

Step 1 Enable geographical redundancy for L2TP tunnels and sessions on the specific User Plane.

Example:

```
Router# configure
Router(config)# cnbng-nal location 0/RSP0/CPU0
Router(config-cnbng-nal-local)# l2tp track-ns-nr
```

Step 2 Use the **show cnbng-nal l2tp-tunnel** [*tunnel-id*] command on the User Plane to display tunnel context details for a specific tunnel or all tunnels.

Example:

```
show cnbng-nal l2tp-tunnel

Tunnel ID              NS             NR
=========             ====           ====
11                    500            501
12                    450            451
```

Step 3 Use the **show l2tp-tunnel detail instance-id** *instance_id* command on the Control Plane to view the configuration and status of a specific L2TP tunnel.

Example:

```
bng# show l2tp-tunnel detail instance-id 1
Wed Jul  2  11:27:52.590 UTC+00:00
tunnel-details
{
  "tunResponses": [
    {
      "state": "established",
      "profileName": "lns-prof1",
      "tunnelType": "lns",
      "sessionCount": 1,
      "IDs Allocated": 1,
      "routerID": "asr9k-lns",
      "srcIP": "41.41.41.1",
      "dstIP": "91.91.91.1",
      "localTunnelID": 39832,
      "remoteTunnelID": 6410,
      "tunnelClientAuthID": "Local-DC",
      "tunnelServerAuthID": "bng-lns"
    }
  ]
}
```

Step 4 Use the **show l2tp-tunnel count instance-id** *instance_id* command on the Control Plane to view the total number of L2TP tunnels.

Example:

```
bng# show l2tp-tunnel count instance-id 1
Thu Jul  3  15:55:02.172 UTC+00:00
```

```
tunnel-details
{
  "tunnelCount": 8996
}
```

Step 5 Use the **show subscriber lns count instance-id** *instance_id* command on the Control Plane to view the number of LNS sessions.

Example:

```
bng# show subscriber lns count instance-id 1
Thu Jul  3  15:55:04.665 UTC+00:00
subscriber-details
{
  "sessionCount": 55964
}
```

Use the **show subscriber pppoe count instance-id** *instance_id* command on the Control Plane to view the number of LAC sessions.

Step 6 Use the **show subscriber lns detail instance-id** *instance_id* command on the Control Plane to view the detailed information about a specific LNS session.

Example:

```
bng# show subscriber lns detail instance-id 1
Mon Oct  20 06:30:27.240 UTC+00:00
subscriber-details
{
  "subResponses": [
    {
      "state": "complete",
      "key": {
        "routerID": "asr9k-1",
        "portID": "Bundle-Ether10",
        "subLabel": "16777218",
        "upSubID": "1"
      },
      "flags": [
        "SM_START_DONE",
        "SM_ACTIVATE_DONE",
        "SM_UPDATE_DONE",
        "IPCP_UP",
        "IPV6CP_UP"
      ],
      "lcpInfo": {
        "state": "opened",
        "keepAliveInterval": 60,
        "keepAliveRetries": 5,
        "localMru": 1492,
        "peerMru": 1492,
        "localMagic": "0xe2ab84f",
        "peerMagic": "0xe2ab850",
        "authOption": "PAP",
        "authCompleted": true,
        "username": "cnbng"
      },
      "ipcpInfo": {
        "state": "opened",
        "peerIpv4Pool": "pool-ISP",
        "peerIpv4Address": "11.0.32.2",
        "peerIpv4Netmask": 22,
        "localIpv4Address": "11.0.32.1",
        "isIpamPoolIPaddr": true
      },
```

```
      "ipv6cpInfo": {
        "state": "opened",
        "localIntfID": "0x1",
        "peerIntfID": "0xcc11000000010001"
      },
      "lnsInfo": {
        "srcIP": "10.1.39.139",
        "dstIP": "10.1.34.52",
        "state": "established",
        "profileName": "l2tp-prof2",
        "tunnelClientAuthID": "bng-lac",
        "tunnelServerAuthID": "Local-DC",
        "callSerialNumber": 16777408,
        "localTunnelID": 12226,
        "localSessionID": 11428,
        "remoteTunnelID": 1017,
        "remoteSessionID": 24885
      },
      "sessionType": "lns",
      "vrf": "default",
      "AuditId": 4,
    }
  ]
}
```


Use the **show subscriber pppoe detail instance-id** *instance_id* command on the Control Plane to view the detailed information about a specific LAC session.

Synchronize L2TP tunnels between CP and UP for CP-GR

Procedure

Step 1 On the Control Plane, use the **subscriber tunnel-synchronize upf** *upf-name* command to manually trigger tunnel synchronization to UP after HA events.

Example:

```
bng# subscriber tunnel-synchronize upf upf1
```

Step 2 On the Control Plane, use the **show subscriber tunnel-synchronize upf** *upf-name* command to view the tunnel synchronization status.

Example:

```
bng# show subscriber tunnel-synchronize upf upf1
```

GR-Replication Pod

GR-replication pod performs the following functions:

- Replicates ETCD and Cache pods data across sites.

- Provides a communication channel between sites.
- Maintains local instances roles of a site in ETCD.
- Monitors local site status (pods status or BFD status or VIP status)

GR-replication pod works in a high availability (HA) setup to maintain the local instances roles of a site in ETCD. Monitoring (local and remote) is disabled in GR-Replication pod in a HA setup. When a site faces an issue, and fails to support the traffic handling at run-time, GR-replication pod internally detects the issue, and allows the standby site to handle the traffic with no or minimum impact.

GR-replication pod is a host networking pod, and it runs on actual worker IP address and not on IP address that is assigned internally by k8.

In a HA setup, one instance of GR-replication pod must be running, and activities related to GR setup such as pod monitoring, and VIP monitoring are not active.

In a GR setup:

- Two instances of GR-replication pod must be running for each cluster. One instance of GR-replication pod is active, and another instance is standby.
- Each GR-replication pod runs on a separate Proto node.
- GR-replication pod requires dedicated VIPs.
  - Internal-VIP for inter-pod (within the same cluster) communication.
  - External-VIP for communication with other clusters.
- The VIPs configured for GR-replication are active on one of the Proto nodes at a time. The GR-pod running on the same Proto node where the VIPs are active is marked as Active GR-replication pod, and the other GR-pod is marked as standby.
- If the active GR-pod is stopped or crashed during runtime, VIP (internal and external) switches to other Proto node, and the standby GR pod becomes Active. The switching of VIP from one Proto node to another Proto node is handled by Keepalived process.
- GR-replication pod uses base port as 15000 (default) + 4 for keepalived monitoring.

ETCD and Cache Pod Replication

Data from ETCD and Cache Pod are replicated to the remote site based on the following two categories:

- Immediate sync
- Deferred sync

Immediate Sync

Data that must be replicated immediately to the remote site belongs to the immediate sync category. Immediate sync data replication is a synchronous call, and replication failure on the remote site returns an error response. Data is replicated to the remote site only for instances whose role is PRIMARY.

Deferred Sync

Data that do not require immediate replication to the remote site belongs to the deferred sync category. This data is maintained in the in-memory cache in GR-replication pod. Data is replicated to the remote site only for instances whose role is PRIMARY.

Deferred sync happens periodically using background thread. Periodicity must be configured before deployment using the YAML file. By default, periodicity is set to 10s.

Deferred sync includes two processes that are executed in a single thread, which runs sequentially.

- **Deferred sync process:** Local site data is pushed to the remote site.
- **Checkpointing process:** Data of the instance whose role is PRIMARY on the remote site is pulled into the current site.

Pod Monitoring

You can configure each pod that need to be monitored. Based on the user configuration, GR-replication pod starts monitoring the pods and detects a pod failure. If the number of replica-sets failed for the pod is greater than the configured threshold, then the GR-replication pod switches over the Role to a mated pair. The current site moves to STANDBY_ERROR state indicating that the site has an issue and cannot serve the traffic.

The detection request timeout interval for the first request is set at 2s, and for subsequent request it is set at 1s. In worst-case scenario, the total time to detect a pod failure is approximately 5s to 6s, with the total convergence time between 7s to 9s.

Note Pod monitoring on GR-replication pod starts after 15 minutes of its configuration.

Traffic Monitoring

This figure illustrates the geo-redundant setup between AIO sites.

Figure 7: GR Setup for AIO Sites

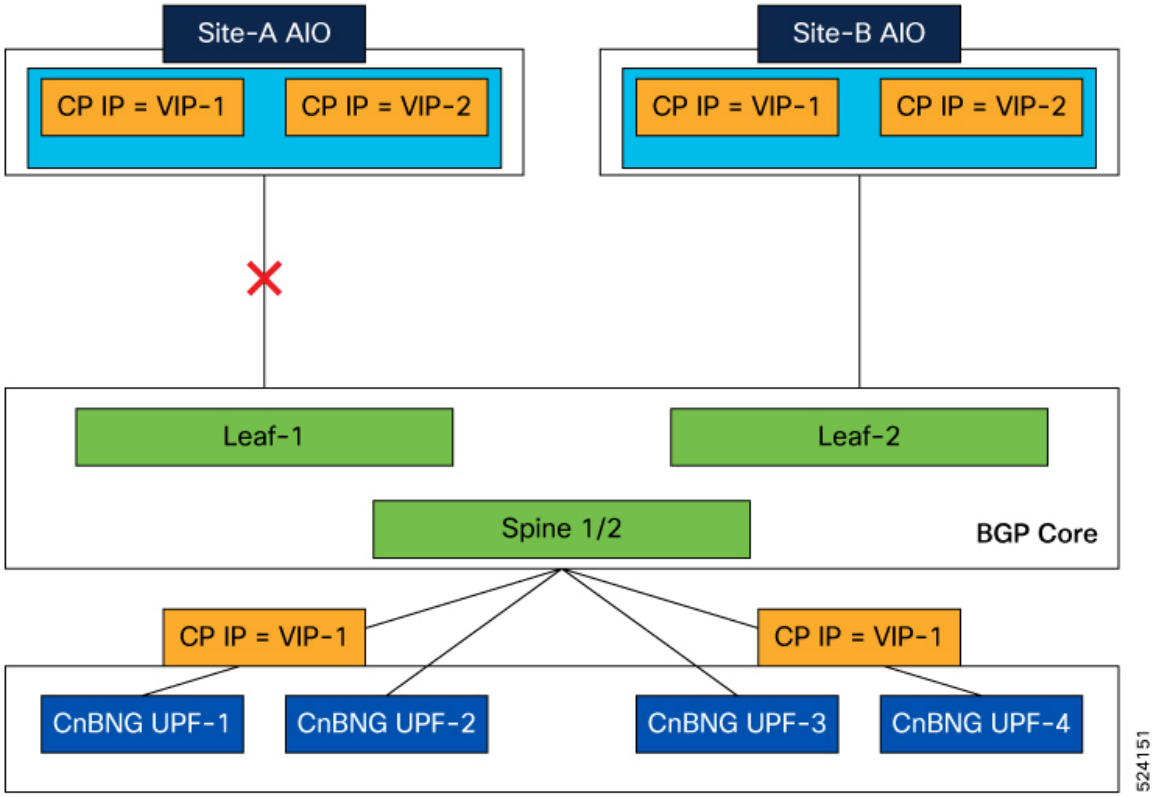

Our network architecture introduces a geo-redundant setup between Site-A and Site-B, ensuring continuous service availability. Geo-Redundancy (GR) instance-1 operates actively on Site-A and remains on standby on Site-B, while GR instance-2 functions actively on Site-B with a standby role on Site-A.

In the event of a failure or connectivity loss at Site-A, the Leaf/Spine switches automatically withdraw the BGP routes associated with Site-A. This triggers the switches to reroute incoming traffic towards Site-B. The Traffic Monitoring feature on Site-B detects the surge in traffic and, upon reaching a predefined packet threshold, the GR-pod initiates a transition for GR Instance-1 from Standby to Active status.

Simultaneously, the BGP-Speaker pod on Site-B proactively readvertises the routes for the GR Instance-1 endpoint, assigning a lower MED value to prioritize these routes. This dynamic response ensures minimal service disruption and maintains optimal traffic flow.

Configure Traffic Monitoring

Use this configuration to enable traffic monitoring functionality.

```
config
 geomonitor
  trafficMonitor
   thresholdCount value
   thresholdInterval interval_value
  exit
 exit
```

NOTES:

- **thresholdCount** *value*: Specifies the number of calls received for the standby instance.
- **thresholdInterval** *interval_value*: Specifies the maximum duration window to hit the threshold count value, in milliseconds.

The following is a sample configuration.

```
geomonitor trafficMonitor
thresholdCount 3
thresholdInterval 3000
```

Instance Roles

Each GR setup site contains multiple instances and roles.

- PRIMARY: Site is ready and actively taking traffic for the given instance.
- STANDBY: Site is standby, ready to take traffic but not taking traffic for the given instance.
- STANDBY_ERROR: Site is in problem, not active and not ready to take traffic for the given instance.
- FAILOVER_INIT: Site has started to failover and not in condition to take traffic. Buffer time is 2 sec for application to complete their activity.
- FAILOVER_COMPLETE: Site has completed the failover and attempted to inform the peer site about the failover for given instance. Buffer time is 2 seconds.
- FAILBACK_STARTED: Manual failover is triggered with delay from remote site for the given instance

For fresh installation, site boots up with:

- Role PRIMARY for local instance (each site has local instance-id configured to identify local instance). It is recommended not to configure the pods for monitoring during fresh installation. Once the setup is ready, you can configure the pods for monitoring.
- Role STANDBY for other instances.

For upgrades, site boots up with:

- STANDBY_ERROR role for all the instances as moving the traffic post upgrade needs manual intervention.
- ETCD stores instance roles.



Note Rolling upgrade or in-service upgrade isn't supported.

After SMI cluster upgrades, GR instance roles may come up as PRIMARY/PRIMARY at site-1, and STANDBY/STANDBY at site-2 sometimes. To make local GR-instance role as PRIMARY on the given site, you must trigger CP-GR switchover manually using the **geo switch-role instance-id** *gr_instanceId* command.

Automated standby-state recovery

This feature addresses the issue of instances in a CPGR cluster remaining in a persistent "STANDBY_ERROR" state after a geo-replication (GR) switchover.

Table 8: Feature History

Feature Name	Release Information	Description
Automated standby-state recovery	2025.02.0	This feature eliminates manual intervention by automatically transitioning CPGR cluster instances from the "STANDBY_ERROR" state to "STANDBY" after a geo-replication switchover.

Current failure response:

When failures such as pod failure or BFD failure occur, the active geo-replication pod triggers a switchover, and the cluster with the failures transitions to "STANDBY_ERROR." These instances then require manual intervention to change their state to "STANDBY."

Automated state transition:

This feature automates the transition, automatically changing the state from "STANDBY_ERROR" to "STANDBY" once the failure condition is resolved.

How automated standby-state recovery works

The feature monitors only specific failures that lead to GR switchovers.

- **POD failure:**

  The system switches to STANDBY_ERROR if the failure rate of pods exceeds the configured threshold. For example, if there are 10 pods and the threshold is set at 50%, the cluster GR state changes to STANDBY_ERR when more than 50% (6 or more pods) fail. The remote cluster then becomes Primary. This transition is referred to GR switchover.

  However, the automatic state change from STANDBY_ERROR back to STANDBY occurs only when all pods are fully restored. This means all 10 pods must be up for the system to return to the STANDBY state. A partial recovery (if only 6 to 9 pods are up) will not trigger the autoswitch of GR state to STANDBY.

- **BFD failure:** The geo-replication pod continuously monitors BFD link health. The health monitoring routine introduced by this feature monitors the ETCD BFD status of the leaves. As soon as any leaf is UP, the BFD link is considered UP, and the instance automatically transitions to `STANDBY`.



Note Failures that do not cause GR switchover are not monitored by this feature.

IPAM

The IP Address Management (IPAM) is a technique for tracking and managing the IP address space of a network.

IPAM stores operational data of active instances in Cache-POD. Cache-POD records are synced to respective standby-cluster of the instances.

During GR switchover of an instance, the new active instance restores IPAM data from the Cache-POD, and continues to allocate IPs for the instance.

The following figure illustrates the IPAM architecture:

Figure 8: IPAM Architecture

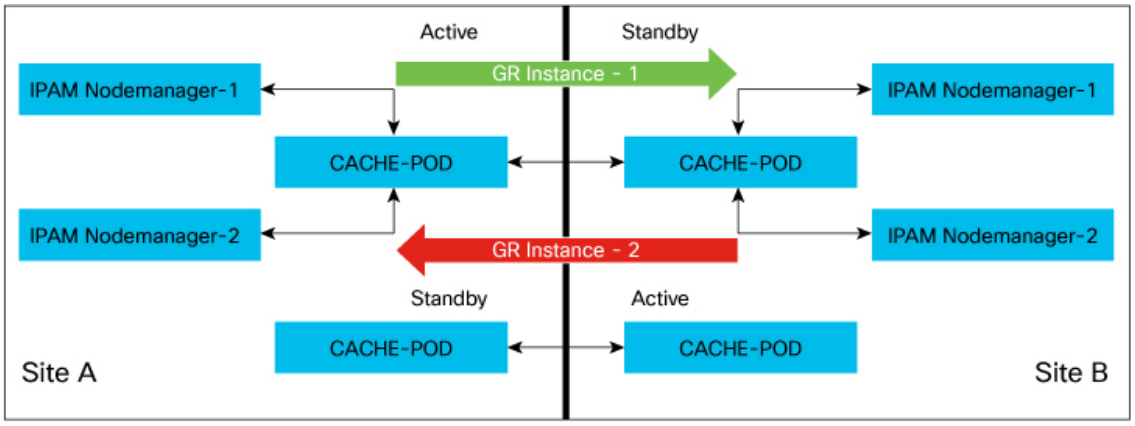

- GR Instance-1 is the local instance of Site A and geo-paired with Site B.
- GR Instance-2 is the local instance of Site B and geo-paired with Site A.

During normal operation, Site A handles UPF-association/release, address-allocation/release for subscribers coming up in GR-instance-1. IPAM writes GR Instance-1 specific content to Cache-POD in the Site A cluster. Then, the IPAM's Cache-POD content is synced to the Site B's Cache-POD (geo-paired cluster).

Similarly, Site B handles UPF-association/release, address-allocation/release for subscribers coming up in GR-instance-2. IPAM writes GR Instance-2 specific content to Cache-POD in Site B cluster. Then, the IPAM's Cache-POD content is synced to Site A Cache-POD (geo-paired cluster).

When one of the clusters goes-down, the respective geo-paired cluster restores the content from local Cache-POD. For example, If Site B goes down, Site A gets role-change trigger for GR Instance-2, and IPAM in Site A restores the content of GR Instance-2 from local Cache-POD (which was already synced). Also, IPAM in Site A handles UPF-register/release, and address-allocate/release for subscribers coming up with GR Instance-2 using the restored content.

IPAM uses both "immediate-sync" and "deferred-sync" options to sync Cache-POD content between clusters.

Limitations and Restrictions

The CP Geo Redundancy has the following limitations and restrictions in this release:

- CP Geo Redundancy is not triggered if both the Geo pods are down or deleted. CP GR is triggered only after both the Geo pods are up.
- Restarting Kafka in one site and Mirrormaker pod on the other site is not supported.
- On system reboot, instances are not automatically associated with the right roles. You must set the roles correctly the first time.
- IP address leaks can occur in IPAM. To address this issue, run the **reconcile ipam** CLI command.
- Pod Monitoring is not supported for CDL pods and few App-infra pods.
- Subscriber sessions can desynchronize between the CP and UP. The solution for this issue is to run CP to UP reconciliation for sessions between the CP and UP.
- Node or pod restart can cause mismatch of session records between pods in the cluster. You must use CP audit to rectify this issue.

Configuring CP Geo-Redundancy

CP Geo-Redundancy configuration is classified into the following categories:

- **NF Configuration**—This configuration is similar on all GR instances of the NF.
- **Cluster Instance Specific NF Configuration**—This configuration contains cluster specific data, which differs on each GR instance of the NF.

Configuring NF Instance

Use the following configuration to configure the NF instance. Each NF instance is identified by a unique number.

```
config
   instances instance instance_id
   exit
```

Example:

```
config
   instances instance 1
   exit
   instances instance 2
   exit
```

Local Instance ID Configuration

The local Instance is configured using the **local-instance** command.

```
local-instance instance instance_id
```

Only two instances can be configured on each local and remote site, and corresponding endpoints can be instantiated.

A local instance-id is the identity of the local site irrespective of whether the site is GR aware.

Note Changing the local instance while the system is running is not supported.

Configuring Endpoints

You must configure the endpoints under an instance specified by a unique instance ID.

Use the following configuration to configure endpoints:

```
config
  instance instance-id gr_instanceId
    endpoint radius
      replicas replicas_count
      nodes nodes_count
      interface coa-nas
        vip-ip vip_ipv4_address vip-port vip_port_number vip-interface interface_id
        vip-ipv6 vip_ipv6_address vip-port vip_port_number vip-interface interface_id

      exit
    exit
    endpoint udp-proxy
      nodes nodes_count
      internal-vip vip_ip_address
      vip-ip vip_ipv4_address vip-port vip_port_number vip-interface interface_id
      vip-ipv6 vip_ipv6_address vip-port vip_port_number vip-interface interface_id

      interface n4
        sla response seconds
        vip-ip vip_ipv4_address vip-interface interface_name
        vip-ipv6 vip_ipv6_address vip-interface interface_name
      exit
      interface gtpu
        sla response milliseconds
      exit
```

NOTES:

- **instance instance-id** *gr_instanceId*: Specifies the GR instance ID.
- **endpoint radius**: Configures the parameters for the RADIUS endpoint and enters the endpoint sub-mode.
- **endpoint udp-proxy**: Configures the parameters for the UDP-proxy endpoint and enters the endpoint sub-mode.
- **replicas** *replicas_count*: Specifies the number of replicas per node. Must be an integer.

  In a GR setup for AIO CP cluster, the replica count must be 1 for BGP speaker pod, GR-replication pod, and UDP-proxy pod. For other pods, the replica count should be based on capacity planning.
- **nodes** *nodes_count*: Specifies the number of nodes. Must be an integer.
- **interface coa-nas** : Defines a new interface "coa-nas", and allows to enter the CoA NAS interface configuration mode.

- **interface n4** : Defines the N4 interface, and allows to enter the N4 interface configuration mode.
- **interface gtpu** : Defines the GTPu interface, and allows to enter the GTPu interface configuration mode.
- **vip-ip** *vip_ipv4_address* **vip-port** *vip_port_number* : Specifies the VIP IPv4 address, and VIP port number of the interface.
- **vip-ipv6** *vip_ipv6_address* **vip-port** *vip_port_number* : Specifies the VIP IPv6 address, and VIP port number of the interface.
- **vip-interface** *interface_id*: Specifies the VIP interface name.
- **internal-vip** *vip_ip_address*: Specifies the internal VIP IP address of the additional endpoint.
- **sla response** *response_time*: Specifies the response time in milliseconds.

Examples:

```
endpoint radius
   replicas 1
   nodes 2
   memory limit 16384
   interface coa-nas
     sla response 140000
     vip-ip 209.72.100.1 vip-port 3799 vip-interface bd2.n4.162
   exit
exit

instance instance-id 1
   endpoint pfcp
      vip-ipv6 2001::1 vip-interface bd2.n4.2105
   interface n4
      vip-ipv6 2001::10 vip-interface bd2.n4.2602
```

Configuring Geo Replication

Endpoints must be configured under an instance. Two Geo-Redundancy pods are needed on each GR site. You should also configure VIP for internal and external Geo interface for ETCD/CachePod replication.

instance instance-id *instance_id* **endpoint geo interface { geo-internal | geo-external } { vip-ip** *vip_ipv4_address* **| vip-ipv6** *vip_ipv6_address* **} vip-port** *vip_port_number*

```
config
  instance instance-id instance_id
   endpoint geo
    replicas replicas_count
    nodes node_count
    interface geo-internal
     vip-ip vip_ipv4_address vip-port vip_port_number
     vip-ipv6 vip_ipv6_address vip-port vip_port_number
    exit
    interface geo-external
     vip-ip vip_ipv4_address vip-port vip_port_number
     vip-ipv6 vip_ipv6_address vip-port vip_port_number
    exit
```

```
  exit
exit
```

NOTES:

- **instance instance-id** *instance_id*: Specifies the GR instance ID. One instance ID for local site and the other for remote site.
- **replicas** *replicas_count*: Specifies the number of replicas per node. Must be an integer.

  In a GR setup for AIO CP cluster, the replica count for GR-replication pod must always be 1.
- **vip-ip** *vip_ip_address*: Specifies the VIP IPv4 address for Internal/External Geo interface.
- **vip-ipv6** *vip_ipv6_address*: Specifies the VIP IPv6 address for Internal/External Geo interface.
- **vip-port** *vip_port_number*: Specifies the VIP port number.

The following is a sample configuration:

```
instance instance-id 1
endpoint geo
  replicas 1
  nodes 2
  interface geo-internal
   vip-ip 209.165.201.8 vip-port 7001
  exit
  interface geo-external
   vip-ipv6 2001:DB8:1::1 vip-port 7002
  exit
exit
```

Configuring IPAM

You can configure all the IPAM parameters under an instance specified by a unique instance ID.

Configuring RADIUS

The following is a sample RADIUS configuration:

```
profile radius
 attribute
  nas-identifier CISCO-BNG-SITE-2
  instance 1
   nas-identifier CISCO-BNG-1
   nas-ip 209.165.100.1
  exit
  instance 2
   nas-identifier CISCO-BNG-2
   nas-ip 209.166.100.2
  exit
 exit
 accounting
  deadtime 3
  attribute
   instance 1
    nas-identifier cisco-acct-1
    nas-ip 209.165.100.1
   exit
   instance 2
```

```
    nas-identifier cisco-acct-2
    nas-ip 209.166.100.2
   exit
  exit
 exit
```

NOTES:

- **instance** *instance_id*: Configures multiple instances for the specified instance and enters the instance sub-mode.
- **nas-identifier** *value*: Specifies the attribute name by which the system will be identified in Accounting-Request messages. *value* must be an alphanumeric string.
- **nas-ip** *ipv4_address*: Specifies the NAS IPv4 address. *ipv4_address* must be an IPv4 address in dotted decimal notation.
- **deadtime** *value*: Sets the time to elapse between RADIUS server marked unreachable and when we can re-attempt to connect.

  value must be an integer from 0 through 65535. Default: 10 minutes.

Configuring a Subscriber Profile

Use the following commands to create a subscriber profile.

```
config
  profile subscriber subscriber_profile
      dhcp-profile dhcp_profile_name
      pppoe-profile pppoe_profile_name
      session-type { ipv4 | ipv4v6 | ipv6 }
      activate-feature-template feature_template_name
      aaa authorize aaa_profile_for_authorization }
    exit
```

NOTES:

- **profile subscriber** *subscriber_profile_name*: Specifies the profile subscriber name and enters the Profile Subscriber Configuraton mode.
- **dhcp-profile** *dhcp_profile_name*: Associates the DHCP first sign of life (FSOL) profile.
- **pppoe-profile** *pppoe_profile_name*: Associates the PPPoE FSOL profile.
- **session-type { ipv4 | ipv4v6 | ipv6 }**: Specifies the allowed session-types as IPv4, IPv4v6, and IPv6.
- **activate-feature-templates** *feature_template_name*: Specifies the list of feature-templates in sequence for activation.
- **aaa { authenticate** *aaa_profile_for_authentication* **| authorize** *aaa_profile_for_authorization* **}**: Specifies the AAA profile to associate for authentication and authorization.

Configuring the IPv4 DHCP Server Profile

Use the following commands to configure the IPv4 DHCP server profile.

```
config
  profile dhcp dhcp_profile_name
    ipv4
      mode server
      server
        pool-name ipam_pool_name
        dns-servers dns_server
        lease days value
        lease hours value
        lease minutes value
      exit
  exit
```

NOTES:

- **profile dhcp** *dhcp_profile_name*: Specifies the DHCP profile name.
- **ipv4**: Enters IPv4 configuration mode.
- **server** : Specifies the IPv4 server details.
  - **dns-servers** *dns_server*: Specifies the Domain Name System (DNS) IPv4 servers available to a DHCP for an IPv4 client.
  - **pool-name** *ipam_pool_name*: Specifies the IP Address Management (IPAM) assigned pool name.
  - **lease { days** *value* **| hours** *value* **| minutes** *value* **}**: Specifies the lease time duration in the number of days, hours, and minutes. The number of lease days supported is from 0 to 365. The number of lease hours supported ranges from 0 to 23 and minutes from 0 to 59.

Configuring the IPv6 DHCP Server Profile

Use the following commands to configure the IPv6 DHCP server profile.

```
config
  profile dhcp dhcp_profile_name
     ipv6
      mode server
      server
        iana-pool-name ipam_pool_name
        iapd-pool-name ipam_pool_name
        lease days value
        lease hours value
        lease minutes value
        exit
      exit
```

NOTES:

- **profile dhcp** *dhcp_profile_name*: Specifies the DHCP profile name.
- **ipv6**: Enters IPv6 configuration mode.
- **server** : Specifies the IPv6 server details.

- **iana-pool-name** *ipam_pool_name*: Specifies the Internet Assigned Numbers Authority (IANA) pool name.
- **iapd-pool-name** *ipam_pool_name*: Specifies the Identity Association for Prefix Delegation (IAPD) pool name.
- **lease { days** *value* **| hours** *value* **| minutes** *value* **}**: Specifies the lease time duration in the number of days, hours, and minutes. The number of lease days supported is from 0 to 365. The number of leave hours supported ranges from 0 to 23 and minutes from 0 to 59.

Creating PPPoE Profile

Use the following commands to create a PPPoE profile.

```
config
  profile pppoe pppoe_profile_name
  mtu mtu
```

NOTES:

- **profile pppoe** *pppoe_profile_name*: Specifies the PPPoE profile name.
- **mtu** *mtu*: Specifies the default PPP maximum transmission unit (MTU) value to use if the Max-Payload tag is not provided. The valid values range from 500 to 2000. The default value is 1492.

Creating the PPP Feature Template

Use the following commands to create a PPP feature template.

Note The PPP feature template allows per subscriber PPP parameters.

```
config
  profile feature-template feature_template_name
  ppp
    ipcp peer-address-pool ipam_pool_name
    ipcp renegotiation ignore
   exit
```

NOTES:

- **profile feature-template** *feature_template_name*: Specifies the profile feature template name.
- **ppp**: Enters the PPP Configuration mode to configure the PPP feature.
- **ipcp peer-address-pool** *ipam_pool_name*: Specifies the address pool to use to obtain an IPv4 address for the peer.
- **ipcp renegotiation ignore**: Specifies to ignore the attempts of the peer to renegotiate IPCP. The entire PPPoE session is terminated on renegotiation.

Configuring Dynamic Routing using BGP

This section describes how to configure dynamic routing using BGP.

Configuring AS and BGP Router IP Address

To configure the AS and IP address for the BGP router, use the following commands:

```
config
   router bgp local_as_number
   exit
exit
```

NOTES:

- **router bgp** *local_as_number*: Specifies the identification number for the local Autonomous Systems (AS).

  In a GR deployment, you need to configure two Autonomous Systems.

  - One AS for leaf and spine.
  - Second AS for both racks: Site-1 and Site-2

Configuring BGP Service Listening IP Address

To configure the BGP service listening IP address, use the following commands:

```
config
   router bgp local_as_number
      interface interface_name
   exit
exit
```

NOTES:

- **interface** *interface_name*: Specifies the name of the interface.

Configuring BGP Neighbors

To configure the BGP neighbors, use the following commands:

```
config
   router bgp local_as_number
      interface interface_name
      neighbor neighbor_ip_address remote-as as_number
   exit
exit
```

NOTES:

- **neighbor** *neighbor_ip_address*: Specifies the IPv4/IPv6 address of the neighbor BGP router.
- **remote-as** *as_number*: Specifies the identification number for the AS.

Configuring Bonding Interface

To configure the bonding interface related to the interfaces, use the following commands:

```
config
   router bgp local_as_number
      interface interface_name
      bondingInterface interface_name
   exit
exit
```

NOTES:

- **bondingInterface** *interface_name*: Specifies the related bonding interface for an interface. If the bonding interface is active, then the BGP gives a higher preference to the interface-service by providing a lower MED value.

Configuring Learn Default Route

If you want to configure specific routes on your system and need to support all routes, then set the **learnDefaultRoute** value as **true**.

Note This configuration is optional.

To configure the Learn Default Route, use the following commands:

```
config
   router bgp local_as_number
      learnDefaultRoute true/false
   exit
exit
```

NOTES:

- **learnDefaultRoute** *true/false*: Specifies the option to enable or disable the **learnDefaultRoute** parameter. When set to true, BGP learns default route and adds it in the kernel space. By default, it is false.

Configuring BGP Port

To configure the port number for a BGP service, use the following commands:

```
config
   router bgp local_as_number
      loopbackPort port_number
   exit
exit
```

NOTES:

- **loopbackPort** *port_number*: Specifies the port number for the BGP service. The default value is 179.

Policy Addition

The BGP speaker pods learns many route information from its neighbors. However, only a few of them are used for supporting the outgoing traffic. This is required for egress traffic handling only. Routes are filtered by configuring import policies on the BGP speakers and is used to send learned routes to the protocol pods.

A sample CLI code for policy addition and the corresponding descriptions for the parameters are shown below.

```
$bgp policy <policy_Name> ip-prefix 209.165.200.225/16 mask-range 21..24 as-path-set "^65100"
 interface bd2n.10 gateway 209.165.201.30
```

Table 9: Import Policies Parameters

Element	Description	Example	Optional
as-path-set	AS path value	"^65100"	Yes
ip-prefix	Prefix value in format { IPv4_address/prefix length | IPv6_address/prefix length }	"209.165.200.225/16" or "2001:DB8::1/32"	Yes
mask-range	IPv4 or IPv6 Mask range { 0..32 | 0..128 }	"21..24"	Yes
interface	Interface to set as source IP (default is VM IP)	eth0	Yes
gateWay	IPv4/IPv6 Gateway address in either format { IPv4_address | IPv6_address } based on the type of ip-prefix value given	209.165.201.30	Yes
modifySourceIp	Modify source IP of incoming route Default value is False.	true	Yes
isStaticRoute	Flag to add static IP address into kernel route Default value is False.	true	Yes

AS-Path Prepending for BGP VIP Routes

Table 10: Feature History

Feature Name	Release Information	Description
AS-Path Prepending for BGP VIP Routes	2024.02.0	This feature allows the cnBNG to prepend the AS-path attribute to BGP Virtual IP (VIP) routes when advertising to neighboring routers. By manipulating the AS-path length, cnBNG influences the route preference on the border leaf routers, which programs the BGP routes into the network. With this feature, you can ensure that the correct routing path is selected in a multi-VRF or multi-AS deployment scenario.

AS-Path Prepending for BGP VIP Routes feature enhances the CP-GR functionality in environments where multiple cnBNG clusters are configured across different Virtual Routing and Forwarding instances (VRFs) or Autonomous Systems (ASes).

cnBNG prepends its own AS number to the AS-path of BGP VIP routes before advertising them to BGP neighbors. This action effectively increases the AS-path length, making these routes less preferable compared to other routes with shorter AS-paths under normal BGP path selection criteria. The border leaf routers use this AS-path length information to determine the best route to the VIP, ensuring that traffic is routed through the appropriate cnBNG cluster.

Example Configuration

The following is a sample configuration to enable prepending AS-path attribute for BGP routes.

```
router bgp 65000
   prepend as-path true
```

Configuring BGP Speaker

This configuration controls the number of BGP speaker pods in deployment. BGP speaker advertises service IP information for incoming traffic from both the sites.

Note

- Use non-bonded interface in BGP speaker pods for BGP peering.
- BGP peering per Proto node is supported with only two BGP routers/leafs. Considering two Proto nodes, there can be a maximum of four BGP neighborships.
- In a GR setup for AIO CP cluster, the replica count for BGP speaker pods must always be 1.

```
config
  instance instance-id instance_id
   endpoint bgpspeaker
     replicas replicas_count
     nodes node_count
   exit
```

The following is a sample configuration:

```
config
  instance instance-id 1
    endpoint bgpspeaker
     replicas 1
     nodes    2
    exit
```

Configuring BFD

Bidirectional Forwarding Detection (BFD) protocol is used for Faster Network Failure Detection along with BGP. Whenever connectivity between BGP peering fails with cluster (NF), failover is triggered to minimize traffic failure impact.

```
config
  router bgp as
    bfd interval interval min_rx min_rx multiplier multiplier
    loopbackPort loopbackPort loopbackBFDPort loopbackBFDPort
  interface interface_id (BGP on non-bonded interface <-- loopbackEth)
    bondingInterface bondingInterface (leaf6-nic)
    bondingInterface bondingInterface (leaf6-nic)
    neighbor neighbor_ip_address remote-as remote_as fail-over fail_over_type
  exit
  interface interface_id (BGP on non-bonded interface <-- loopbackEth)
    bondingInterface bondingInterface (leaf7-nic)
    bondingInterface bondingInterface (leaf7-nic)
    neighbor bondingInterface remote-as remote_as fail-over fail_over_type
  exit
  policy-name policy_name
   as-path-set as_path_set
   gateWay gateWay_address
   interface interface_id_source
   ip-prefix ip_prefix_value
   isStaticRoute false | true
   mask-range mask_range
   modifySourceIp false | true
  exit
exit
```

NOTES:

- **bgp** *as*: Specifies the Autonomous System (AS) path set.
- **bfd**: Specifies BFD configuration.
  - **interval** *interval* : Specifies the BFD interval in milliseconds.
  - **min_rx** *min_rx*: Specifies the BFD minimum RX in milliseconds.
  - **multiplier** *multiplier*: Specifies the BFD interval multiplier.
- **interface** *interface_id*: Specifies BGP local interface.
  - **bondingInterface** *bondingInterface*: Specifies the linked bonding interface.

- **neighbor** *neighbor_ip_address*: Specifies the IPv4/IPv6 address of neighbor.
  - **fail-over** *fail_over_type*: Specifies the failover type.
  - **remote-as** *remote_as*: Specifies the Autonomous System (AS) number of BGP neighbor.

- **learnDefaultRoute**: Learns default route and adds it in kernel space
- **loopbackBFDPort** *loopbackBFDPort*: Specifies the BFD local port.
- **loopbackPort** *loopbackPort*: Specifies the BGP local port.
- **policy-name** *policy_name*: Specifies the policy name.
  - **as-path-set** *as_path_set*: Specifies the Autonomous System (AS) path set.
  - **gateWay** *gateWay_address*: Specifies the gateway address.
  - **interface** *interface_id_source*: Specifies the interface to set as source IP.
  - **ip-prefix** *ip_prefix_value*: Specifies the IP prefix value.
  - **isStaticRoute** *false | true*: Specifies whether to add static route in kernel space. Default value is false.
  - **mask-range** *mask_range*: Specifies the mask range.
  - **modifySourceIp** *false | true*: Modifies the source IP of the incoming route. Default value is false.

    true: This option is used for non-UDP related VIPs. Source IP of the given interface is used as Source IP while sending out packets from .

    false: This option is used for all UDP related VIPs. VIP is used as Source IP while sending out packets from .

The following is a sample configuration:

```
router bgp 65142
 learnDefaultRoute false
 bfd interval 250000 min_rx 250000 multiplier 3
 interface enp94s0f0.3921
  bondingInterface enp216s0f0
  bondingInterface enp94s0f0
  neighbor 209.165.201.24 remote-as 65141 fail-over bfd
 exit
 interface enp94s0f1.3922
  bondingInterface enp216s0f1
  bondingInterface enp94s0f1
  neighbor 2001::250 remote-as 65141 fail-over bfd
```

Configuring POD Monitoring

To configure POD monitoring and failover thresholds in the GR setup, use the following configuration. The GR pod monitors the configured POD name.

```
config
 geomonitor
  podmonitor pods pod_name
```

```
  retryCount value
  retryInterval interval_value
  retryFailOverInterval failover_interval
  failedReplicaPercent percent_value
 exit
exit
```

NOTES:

- **pods** *pod_name*: Specifies the name of the pod to be monitored. For example, Cache-pod, res-ep, and so on.
- **retryCount** *value*: Specifies the retry counter value to retry if the pod fails to ping. After that the pod is marked as down. Must be an integer in the range of 1-10.
- **retryInterval** *interval_value*: Specifies the retry interval in milliseconds if the pod successfully pings. Must be an integer in the range of 200-10000.
- **retryFailOverInterval** *failover_interval*: Specifies the retry interval in milliseconds if the pod fails to ping. Must be an integer in the range of 200-10000.
- **failedReplicaPercent** *percent_value*: Specifies the percent value of failed replica after which GR failover is triggered. Must be an integer in the range of 10-100.

The following is a sample configuration.

```
geomonitor podmonitor pods cache-pod
 retryCount 3
 retryInterval 5
 retryFailOverInterval 1
 failedReplicaPercent 40
exit
```

Configuring CDL Instance Awareness and Replication

In Common Data Layer (CDL), along with existing GR related parameters, GR instance awareness must be enabled using a feature flag on all sites. Also, the mapping of system-id to slice names should also be provided for this feature to work on all sites.

The CDL is also equipped with Geo Replication (GR) failover notifications, which can notify the timer expiry of session data and bulk notifications to the currently active site. The CDL uses Border Gateway Protocol (BGP) through App-Infra for the GR failover notifications.

The CDL subscribes to the key value on both the GR sites. The App-Infra sends notifications to the CDL when there is any change in these key values. A key value indicates the state of the CDL System ID or the GR instance. The GR instance is mapped to the CDL slices using the CDL system ID or the GR instance ID in the key.

The system ID is mandatory on both the sites. The GR instance ID in the NF configuration must match the CDL system ID.

CDL has instance-specific data slices. It also allows users to configure instance-specific slice information at the time of bringing up.

- CDL notifies the data on expiry or upon bulk notification request from the active slices.
- CDL determines the active instance based on the notification from app-infra memory-cache.

- CDL slice is a partition within a CDL instance to store a different kind of data. In this case, NF stores a different instance of data.



Note CDL slice name should match with the slice-name configured in GR.

Configuring CDL Instance Awareness

The following command is used to configure CDL instance awareness.

```
config
cdl
 datastore datastore_session_name
   features
    instance-aware-notification
      enable [ true | false ]
      system-id system_id
       slice-names slice_names
   end
```

NOTES:

- **datastore** *datastore_session_name*: Specifies the datastore name.
- **enable [true | false]**: Enables the GR instance state check for slices.
- **system-id** *system_id*: Maps the system ID to slice name.
- **slice-names** *slice_names*: Specifies the list of slice names associated with the system ID. CDL slice name should match with the slice-name configured in GR.

The following is a sample configuration:

```
cdl datastore session
 features instance-aware-notification enable true
 features instance-aware-notification system-id 1
  slice-names [ sgw1 smf1 ]
 exit
 features instance-aware-notification system-id 2
  slice-names [ sgw2 smf2 ]
 end
```

Configuring CDL Replication

This section describes the CDL replication configuration.

1. Configure Site-1 CDL HA system without any Geo-HA-related configuration parameters.
   a. Set the System ID as 1 in the configuration.
   b. Set the slot map/replica and index map/replica and Kafka replica as per the requirements.

   The following is a sample configuration:

   ```
   cdl system-id 1
   cdl node-type session
   ```

```
cdl datastore session
endpoint replica replica_id
  slot map 4
  slot replica 2
  index map 1
  index replica 2
cdl kafka replica 2
```

1. Configure external IPs on Site-1 for Site-2 to Site-1 communication.
   a. Enable geo-replication on Site-1 and configure the remote Site as 2 for Site-1.

      cdl enable-geo-replication *true*
   b. Configure the external IP for CDL endpoint to be accessed by Site-2.

      cdl datastore session endpoint external-ip *site-1_external_ip*
   c. Configure the external IP and port for all Kafka replicas.

      So, if two replicas (default) are configured for Kafka, user need to provide two different <*ip*>+<*port*> pairs.

      cdl kafka external-ip *site-1_external_ip port1* **cdl kafka external-ip** *site-1_external_ip port2*

2. Add remote site (Site-1) information on Site-2.
   - Remote site cdl-ep configuration on Site-2:

     cdl remote-site 1 db-endpoint host *site-1_cdl_ep_ip*

     cdl remote-site 1 db-endpoint port *site-1_cdl_ep_port*

     (Port Example: 8882)
   - Remote site Kafka configuration on Site-2:

     ```
     cdl remote-site 1 kafka-server site-1_kafka1_ip site-1_kafka1_port
     ```

     ```
     cdl remote-site 1 kafka-server site-1_kafka2_ip site-1_kafka2_port
     ```
   - Direct the session datastore configuration to remote Site-2 configuration:

     ```
     cdl datastore session geo-remote-site 1
     ```
   - (Optional) Configure the SSL certificates to establish a secure connection with remote site on Site-1. All the certificates are in multi-line raw text format. If the certificates are not valid, the server continues with non-secure connection.

     cdl ssl-config certs *site-2_external_ip* **ssl-key** *<ssl_key>*

     cdl ssl-config certs *site-2_external_ip* **ssl-crt** *<ssl_crt>*

3. Commit GR configuration on Site-2:
   - Commit the configuration and let the pods be deployed on Site-2.
   - Verify all pods are in running state.
   - Once both sites are deployed, verify that the mirror maker pods on both sites are running and in ready state.

Examples

HA:

```
cdl node-type db-ims

cdl datastore session
 endpoint replica 2
 index map    1
 index write-factor 1
 slot replica 2
 slot map     4
exit

k8 label cdl-layer key smi.cisco.com/node-type value oam
```

Site-1:

```
cdl system-id          1
cdl node-type          session
cdl enable-geo-replication true

cdl remote-site 2
 db-endpoint host 209.165.201.21 >> Site-2 external CDL IP
 db-endpoint port 8882
 kafka-server 209.165.201.21 10092 >> Site-2 external CDL IP
 exit
exit

cdl label-config session
 endpoint key smi.cisco.com/node-type1
 endpoint value cdl-node
 slot map 1
  key   smi.cisco.com/node-type1
  value cdl-node
 exit
 index map 1
  key   smi.cisco.com/node-type1
  value cdl-node
 exit
exit
cdl logging default-log-level debug

cdl datastore session
 label-config    session
 geo-remote-site [ 2 ]
 slice-names     [ 1 2 ]
 endpoint cpu-request 100
 endpoint replica 2
 endpoint external-ip 209.165.201.25 >> Site-1 external CDL IP
 endpoint external-port 8882
 index cpu-request 100
 index replica 2
 index map   1
 slot cpu-request 100
 slot replica 2
 slot map    1
exit

cdl kafka replica 1
cdl kafka label-config key smi.cisco.com/node-type1
cdl kafka label-config value cdl-node
cdl kafka external-ip 209.165.201.25 10092 >> Site-1 external CDL IP
```

Site-2:

```
cdl system-id          2
cdl node-type          session
cdl enable-geo-replication true

cdl remote-site 1
 db-endpoint host 209.165.201.25 >> Site-1 external CDL IP
 db-endpoint port 8882
 kafka-server 209.165.201.25 10092 >> Site-1 external CDL IP
 exit
exit

cdl label-config session
 endpoint key smi.cisco.com/node-type12
 endpoint value cdl-node
 slot map 1
  key   smi.cisco.com/node-type12
  value cdl-node
 exit
 index map 1
  key   smi.cisco.com/node-type12
  value cdl-node
 exit
exit

cdl datastore session
 label-config    session
 geo-remote-site [ 1 ]
 slice-names     [ 1 2 ]
 endpoint cpu-request 100
 endpoint replica 2
 endpoint external-ip 209.165.201.21 >> Site-2 external CDL IP
 endpoint external-port 8882
 index cpu-request 100
 index replica 2
 index map   1
 slot cpu-request 100
 slot replica 2
 slot map    1
exit

cdl kafka replica 1
cdl kafka label-config key smi.cisco.com/node-type12
cdl kafka label-config value cdl-node
cdl kafka external-ip 209.165.201.21 10092 >> Site-2 external CDL IP
```

CP-GR for AIO - Configuration Example

This is a sample configuration to bring up CP-GR for AIO cluster.

```
instance instance-id 1
 endpoint geo
  replicas 1
  interface geo-internal
   vip-ip 3.3.174.3 vip-port 7001
   vip-ipv6 2002:4888:3:3::174:3 vip-ipv6-port 7001
  exit
  interface geo-external
   vip-ip 3.3.174.4 vip-port 7002
   vip-ipv6 2002:4888:3:3::174:4 vip-ipv6-port 7002
  exit
 exit
 endpoint bgpspeaker
```

```
  replicas 1
 exit
 endpoint sm
  replicas 2
 exit
 endpoint nodemgr
  replicas 2
 exit
 endpoint n4-protocol
  replicas 2
  retransmission max-retry 1
 exit
 endpoint dhcp
  replicas 2
 exit
 endpoint radius
  replicas 2
  interface coa-nas
   sla response 140000
   vip-ip 3.4.100.1 vip-port 3799 vip-interface bd2.n4.172
   vip-ipv6 2002:4888:3:4::100:1 vip-ipv6-port 3799 vip-interface bd2.n4.172
  exit
 exit
 endpoint udp-proxy
  replicas 1
  vip-ip 3.4.100.1 vip-interface bd2.n4.172
  vip-ipv6 2002:4888:3:4::100:1 vip-interface bd2.n4.172
  interface n4
   sla response 140000
  exit
  interface gtpu
   sla response 180000
  exit
 exit
exit
instance instance-id 2
 endpoint geo
  replicas 1
  interface geo-internal
   vip-ip 4.4.184.3 vip-port 7001
   vip-ipv6 2002:4888:4:4::184:3 vip-ipv6-port 7001
  exit
  interface geo-external
   vip-ip 4.4.184.4 vip-port 7002
   vip-ipv6 2002:4888:4:4::184:4 vip-ipv6-port 7002
  exit
 exit
 endpoint bgpspeaker
  replicas 1
 exit
 endpoint sm
  replicas 2
 exit
 endpoint nodemgr
  replicas 2
 exit
 endpoint n4-protocol
  replicas 2
  retransmission max-retry 1
 exit
 endpoint dhcp
  replicas 2
 exit
 endpoint radius
```

```
  replicas 2
  interface coa-nas
   sla response 140000
   vip-ip 4.3.100.1 vip-port 3799 vip-interface bd2.n4.172
   vip-ipv6 2002:4888:4:3::100:1 vip-ipv6-port 3799 vip-interface bd2.n4.172
  exit
 exit
 endpoint udp-proxy
  replicas 1
  vip-ip 4.3.100.1 vip-interface bd2.n4.172
  vip-ipv6 2002:4888:4:3::100:1 vip-interface bd2.n4.172
  interface n4
   sla response 140000
  exit
  interface gtpu
   sla response 180000
  exit
 exit
exit
cdl system-id          1
cdl node-type          session
cdl enable-geo-replication true
cdl zookeeper replica 3
cdl remote-site 2
 db-endpoint host 4.4.185.3
 db-endpoint port 8882
 kafka-server 4.4.185.4 10001
 exit
exit
cdl label-config session
 endpoint key smi.cisco.com/sess-type
 endpoint value cdl-node
 slot map 1
  key   smi.cisco.com/sess-type
  value cdl-node
 exit
 index map 1
  key   smi.cisco.com/sess-type
  value cdl-node
 exit
exit
cdl logging default-log-level error
cdl datastore session
 label-config    session
 geo-remote-site [ 2 ]
 slice-names     [ aio1 aio2 ]
 overload-protection disable true
 endpoint go-max-procs 16
 endpoint replica 2
 endpoint copies-per-node 2
 endpoint settings slot-timeout-ms 750
 endpoint external-ip 3.3.175.3
 endpoint external-port 8882
 index go-max-procs 8
 index replica 2
 index map    1
 index write-factor 1
 features instance-aware-notification enable true
 features instance-aware-notification system-id 1
  slice-names [ aio1 ]
 exit
 features instance-aware-notification system-id 2
  slice-names [ aio2 ]
 exit
```

```
 slot go-max-procs 8
 slot replica 2
 slot map     1
 slot write-factor 1
 slot notification limit           1500
 slot notification max-concurrent-bulk-notifications 20
exit
cdl kafka replica 1
cdl kafka label-config key smi.cisco.com/sess-type
cdl kafka label-config value cdl-node
cdl kafka external-ip 3.3.175.4 10001
exit
etcd replicas 3
etcd backup disable false
```

Cluster Maintenance Mode

cnBNG-CP supports the maintenance mode flag to disable the impact on a cluster if the cluster in GR setup is scheduled for maintenance. This is useful so that the standby cluster executes its responsibility and other activities on the targeted cluster without any issue.

Use the **Geo maintenance mode { true | false }** CLI command to enable or disable the maintenance mode in a cluster.

When the **Geo maintenance mode** value is set to **true**,

- All monitoring activities are paused
- The standby cluster can't trigger failover in any case
- Only CLI-based failover is allowed from the cluster where the maintanence mode is enabled.
- Replication activities continue on the cluster.
- Maintenance mode doesn't change instance roles of the site implicitly. However, role change is possible using `geo switch-role role` CLI command.

Whenever there is a change in the maintenance mode flag value:

- The instance role of the cluster is unchanged
- The standby site is notified of the new flag value, so that the standby site refrains from sending any messages. It also stops remote cluster monitoring.

Note Both the clusters can be in maintenance mode at the same time. You can push the system into maintenance mode even if the standby cluster is already under maintenance mode.

Viewing the Maintenance Mode Status

To check the maintenance mode status, use the **show geo-maintenance-mode** command.

Manual CLI Switchover

The following section provides information on manual CLI based switchover commands.

Geo Switch Role

To switch GR role (for example, role Primary to Standby), use the following command.

geo switch-role { role *role* | **instance-id** *gr_instanceId* }

NOTES:

- **role** *role*: Specifies new role for the given site.

  Role can be primary or standby.

- **instance-id** *gr_instanceId*: Specifies the GR Instance ID

`geo switch-role` command triggers manual failover from one site to another site for specific instance ID. The site which triggers the failover is moved from PRIMARY role to STANDBY_ERROR role. In between, the site which triggers failover, sends a failover (trigger GR) message to another site. The other site which receives the failover message is moved from STANDBY role to PRIMARY role.

Geo Reset Role

To reset the GR instance role (for example, role from STANDBY_ERROR to STANDBY), use the following command:

geo reset-role { role *role* **instance-id** *gr_instanceId* }

NOTES:

- **role** *role*: Specifies new role for the given site.

  Role must be standby.

- **instance-id** *gr_instanceId*: Specifies the GR Instance ID.

`geo reset-role` command triggers change in the role for the given instance on local site. Remote site will not receive any message for the same command. It is only possible to change the role for the given instance ID from STANDBY_ERROR to STANDBY. Another role change is not possible.

Key Performance Indicators (KPIs)

The following section describes KPIs.

Table 11: Monitoring KPIs

KPI Name	Description	Labels	Possible Values
geo_monitoring_total	This KPI displays the total number of successful / failure messages of different kinds such as, heartbeat / remoteNotify / TriggerGR and so on.	ControlAction Type	AdminMonitoring ActionType / AdminRemote MessageAction Type / AdminRole ChangeActionType
		ControlAction NameType	MonitorPod / MonitorBfd / MonitorVip RemoteMsgHeartbeat / RemoteMsgNotify TriggerGRApi / ResetRoleApi
		Admin Node	Any string value. For example, GR Instance ID or instance key / pod name
		Status Code	Error / Success code
		Status Message	Message string
geo_RejectedRoleChanged_total	This KPI displays the total number of control packets coming to Standby GR-instance from the User Plane or RADIUS server.	RejectedCount GRInstanceId	{10, 1} / {20, 2}

Table 12: BGP Routing KPIs

KPI Name	Description	Labels	Possible Values
bgp_peers_total	Total number of peers added	peer_ip	BGP neighbor IP address
		as_path	AS value (in digit format) of BGP peer.

KPI Name	Description	Labels	Possible Values
bgp_failed_peerstotal	Total number of failed peers	peer_ip	BGP neighbor IP address
		as_path	AS value (in digit format) of BGP peer.
		error	Error message
bgp_incoming_routerequest_total	Total number of incoming routes	interface	Interface name of incoming route
		next_hop	Gateway IP address (next hop address).
		service_IP	Service IP to publish
bgp_incoming_failedrouterequest_total	Total number of failed incoming routes	peer_ip	BGP neighbor IP address
		as_path	AS value (in digit format) of BGP peer.
		service_IP	Service IP to publish
bgp_outgoing_routerequest_total	Total number of outgoing routes	local_pref	BGP neighbor IP address
		med	AS value (in digit format) of BGP peer.
		next_hop	Gateway IP address (next hop address).
		service_IP	Service IP to publish
bgp_outgoing_failedrouterequest_total	Total number of failed outgoing routes	local_pref	BGP neighbor IP address
		med	AS value (in digit format) of BGP peer.
		next_hop	Gateway IP address (next hop address).
		service_IP	Service IP to publish
bgp_speaker_bfd_status	BFD status	status	BFD_STATUS

Monitoring and Troubleshooting

This section provides information about the CLI commands available to monitor and troubleshoot the feature.

You can use the following monitor, show, and clear commands:

- monitor protocol interface pfcp instance-id <instance_id>
- show subscriber session count instance-id <instance_id>
- show subscriber dhcp count instance-id <instance_id>
- show subscriber pppoe count instance-id <instance_id>
- show subscriber pppoe detail instance-id <instance_id>
- show subscriber redundancy detail instance-id <instance_id>
- show role instance-id <instance_id>
- show role-additional-info instance-id <instance_id>
- clear subscriber sessmgr [srg-peer-id <srg_peer_id> | upf <upf_name> | instance-id <instance_id>]
- clear subscriber dhcp [srg-peer-id <srg_peer_id> | upf <upf_name> | instance-id <instance_id>]
- clear subscriber pppoe [srg-peer-id <srg_peer_id> | upf <upf_name> | instance-id <instance_id>]



Note

- All monitor and show commands must include an instance ID.
- The monitor and clear commands work only for instances whose role is PRIMARY.

From release 2024.02 onwards, we have enhanced the Show CLI commands with an address family specific filtering capability. With this feature you can filter output based on the address family type, either IPv4 or IPv6, enabling you to view the configurations and status of network elements that are specific to an address type.

"show bgp" Command Outputs in an AIO CP-GR Setup

In an AIO CP-GR setup, all **show bgp** command outputs display data only from **bgpspeaker-pod-0**.

show bgp kernel route

To view BGP kernel configured routes, use the following command:

show bgp-kernel-route [ipv4 | ipv6]

Example

The following is a sample configuration:

```
show bgp-kernel-route ipv4

-----bgpspeaker-pod-1  ----
```

```
 DestinationIP  SourceIP        Gateway

 209.165.202.133    209.165.202.148   209.165.202.142

-----bgpspeaker-pod-2 ----

 DestinationIP      SourceIP          Gateway

 209.165.202.134    209.165.202.148   209.165.202.142
```

show bgp global

To view BGP global configuration, use the following command:

show bgp-global [ipv4 | ipv6]

Example

The following is a sample configuration:

```
show bgp-global ipv4
global-details
-----bgpspeaker-pod-1  ----
AS:        65000
Router-ID: 209.165.202.149
Listening Port: 179, Addresses: 209.165.202.149
-----bgpspeaker-pod-2  ----
AS:        65000
Router-ID: 209.165.202.148
Listening Port: 179, Addresses: 209.165.202.148
```

show bgp neighbors

To view BGP neighbors status, use the following command:

show bgp-neighbors [ipv4 | ipv6]
show bgp-neighbors ip *ipv4_address | ipv6_address*

Example

The following is a list of few configuration examples:

```
show bgp-neighbors ipv4
-----bgpspeaker-pod-2  ----
Peer             AS  Up/Down State       |#Received  Accepted
209.165.202.142 60000 00:25:06 Establ      |        3         3
-----bgpspeaker-pod-1  ----
Peer             AS Up/Down State       |#Received  Accepted
209.165.202.142 60000   never Idle        |        0         0
```

```
show bgp-neighbors ip 209.165.202.142
-----bgpspeaker-pod-1  ----
BGP neighbor is 209.165.202.142, remote AS 60000
  BGP version 4, remote router ID unknown
  BGP state = ACTIVE
  BGP OutQ = 0, Flops = 0
  Hold time is 0, keepalive interval is 0 seconds
  Configured hold time is 90, keepalive interval is 30 seconds
```

```
  Neighbor capabilities:
    multiprotocol:
        ipv4-unicast:   advertised and received
    route-refresh:      advertised and received
    extended-nexthop:   advertised
        Local:  nlri: ipv4-unicast, nexthop: ipv6
    4-octet-as: advertised and received
  Message statistics:
                         Sent       Rcvd
    Opens:                  1          1
    Notifications:          0          0
    Updates:                1          2
    Keepalives:            70         70
    Route Refresh:          0          0
    Discarded:              0          0
    Total:                 72         73
  Route statistics:
    Advertised:             0
    Received:              10
    Accepted:              10

-----bgpspeaker-pod-2  ----
BGP neighbor is 209.165.202.142, remote AS 60000
  BGP version 4, remote router ID 209.165.202.136
  BGP state = ESTABLISHED, up for 00:25:20
  BGP OutQ = 0, Flops = 0
  Hold time is 90, keepalive interval is 30 seconds
  Configured hold time is 90, keepalive interval is 30 seconds

  Neighbor capabilities:
    multiprotocol:
        ipv4-unicast:   advertised and received
    route-refresh:      advertised and received
    extended-nexthop:   advertised
        Local:  nlri: ipv4-unicast, nexthop: ipv6
    4-octet-as: advertised and received
  Message statistics:
                         Sent       Rcvd
    Opens:                  1          1
    Notifications:          0          0
    Updates:                1          1
    Keepalives:            51         51
    Route Refresh:          0          0
    Discarded:              0          0
    Total:                 53         53
  Route statistics:
    Advertised:             0
    Received:               3
    Accepted:               3
```

show bgp route summary

To view BGP route summary, use the following command:

show bgp-route-summary [ipv4 | ipv6]

Example

The following is a sample configuration.

```
show bgp-route-summary ipv4
route-details
```

```
-----bgpspeaker-pod-1  ----
Table afi:AFI_IP safi:SAFI_UNICAST
Destination: 5, Path: 5
-----bgpspeaker-pod-2 ----
Table afi:AFI_IP safi:SAFI_UNICAST
Destination: 2, Path: 2
```

show bgp routes

To view BGP routes information, use the following command:

show bgp-routes [ipv4 | ipv6]

Example

The following is a sample configuration:

```
show bgp-routes ipv4
bgp-route

-----bgpspeaker-pod-1  ----
   Network              Next Hop             AS_PATH      Age        Attrs
*> 209.165.202.133/24   209.165.202.142        60000      00:25:55   [{Origin: i} {Med: 0}]
*> 209.165.200.225/32   209.165.202.148                  00:26:00   [{Origin: e} {LocalPref:
 100} {Med: 600}]
*> 209.165.202.134/24   209.165.202.142        60000      00:25:55   [{Origin: i} {Med: 0}]
*> 209.165.202.140/24   209.165.202.142        60000      00:25:55   [{Origin: i} {Med: 0}]
*> 209.165.202.146/32   209.165.202.148                  00:26:00   [{Origin: e} {LocalPref:
 100} {Med: 600}]

-----bgpspeaker-pod-2  ----
   Network              Next Hop             AS_PATH      Age        Attrs
*> 209.165.200.225/32   209.165.202.149                  00:26:24   [{Origin: e} {LocalPref:
 100} {Med: 600}]
*> 209.165.202.146/32   209.165.202.149                  00:26:24   [{Origin: e} {LocalPref:
 100} {Med: 600}]
```

show bfd neighbor

To view the BFD status of neighbors, use the following command:

show bfd-neighbor [ipv4 | ipv6]

Example

The following is a sample configuration.

```
show bfd-neighbor ipv4
Mon Jan 29 06:34:39.776 UTC+00:00
status-details

-----bgpspeaker-pod-0 ----

OurAddr NeighAddr Vrf State OurInt OurIntState

209.165.202.140 209.165.201.146 UP - -
-----bgpspeaker-pod-1 ----

OurAddr NeighAddr Vrf State OurInt OurIntState
```

```
209.165.202.141 209.165.202.146 UP - -
```

show bgp-learned-routes

To view information about BGP learned routes, use the following command:

show bgp-learned-routes [ipv4 | ipv6]

Example

The following is a sample configuration:

```
show bgp-learned-routes ipv4
bgp-route

-----bgpspeaker-pod-1 ----
   Network              Next Hop            AS_PATH
         Age        Interface           Vrf                  Attrs
*> 209.165.201.22/27   209.165.200.225      63100 65100
        03:06:15   enp216s0f0.2119      Default              [{Origin: i}]
*> 209.165.201.0/27    209.165.200.225      63100
        03:06:15   enp216s0f0.2119      Default              [{Origin: i}]

-----bgpspeaker-pod-0 ----
   Network              Next Hop            AS_PATH
         Age        Interface           Vrf                  Attrs
*> 209.165.201.22/27    209.165.200.225      63100 65100
         03:06:19   enp216s0f0.2119      Default              [{Origin: i}]
*> 209.165.200.25/27    209.165.200.225      63100
         03:06:19   enp216s0f0.2119      Default              [{Origin: i}]
```

show bgp-advertised-routes

To view BGP advertised routes information, use the following command:

show bgp-advertised-routes [ipv4 | ipv6]

Example

The following is a sample configuration:

```
show bgp-advertised-routes ipv4
bgp-route

-----bgpspeaker-pod-0 ----
   Network              Next Hop            AS_PATH
         Age        Interface           Vrf                  Attrs
*> 209.165.200.25/27   209.165.200.225      63200 63200 63200
        02:39:47   enp216s0f0.2119      Default             [{Origin: e} {LocalPref: 2210}
 {Med: 1220}]
*> 209.165.200.22/27   209.165.200.225      63200 63200 63200
        02:39:47   enp216s0f0.2119      Default             [{Origin: e} {LocalPref: 2210}
 {Med: 1220}]

-----bgpspeaker-pod-1 ----
   Network              Next Hop            AS_PATH
         Age        Interface           Vrf                  Attrs
*> 209.165.200.25/27   209.165.200.224      63200 63200 63200
        02:39:45   enp216s0f0.2119      Default             [{Origin: e} {LocalPref: 2220}
```

```
 {Med: 1210}]
*> 209.165.200.22/27   209.165.200.224       63200 63200 63200
        02:39:45   enp216s0f0.2119      Default             [{Origin: e} {LocalPref: 2220}
 {Med: 1210}]
```