G.8275.1 Telecom Profile

Precision Time Protocol (PTP) is a protocol for distributing precise time and frequency over packet networks. PTP is defined in the IEEE Standard 1588. It defines an exchange of timed messages

PTP allows for separate profiles to be defined in order to adapt PTP for use in different scenarios. A profile is a specific selection of PTP configuration options that are selected to meet the requirements of a particular application.

Effective Cisco IOS-XE Release 3.18S, Cisco ASR 920 Series Aggregation Services Routers support the G.8275.1 telecom profile. This profile targets accurate time and phase distribution and requires boundary clocks at every node in the network.

Effective Cisco IOS-XE Release 3.18SP, Cisco ASR 920 Series Aggregation Services Routers support the G.8273.2 telecom recommendation.

This recommendation allows for proper network operation for phase and time synchronization distribution when network equipment embedding a telecom boundary clock (T-BC) and a telecom time subordinaate clock (T-TSC) is timed from another T-BC or a telecom grandmaster clock (T-GM). This recommendation addresses only the distribution of phase and time synchronization with the full timing support architecture as defined in ITU-T G.8275.

- Why G.8275.1?, on page 1
- Configuring the G.8275.1 Profile, on page 6
- Feature Information for G.8275.1, on page 10

Why G.8275.1?

The G.8275.1 profile is used in mobile cellular systems that require accurate synchronization of time and phase. For example, the fourth generation (4G) of mobile telecommunications technology.

The G.8275.1 profile is also used in telecom networks where phase or time-of-day synchronization is required and where each network device participates in the PTP protocol.

Because a boundary clock is used at every node in the chain between PTP Grandmaster and PTP Subordinate, there is reduction in time error accumulation through the network.

More About G.8275.1

The G.8275.1 must meet the following requirements:

- Non-participant devices, that is, devices that only forward PTP packets, and PTP transparent clocks are not allowed.
- The telecom grandmaster (T-GM) provides timing to all other devices on the network. It does not synchronize its local clock with any other network element other than the Primary Reference Time Clock (PRTC). T-GM in locked mode must have phase and frequency sources that are traceable to PRTC. T-GM in locked mode must always have QL-PRC/PRS frequency. T-GM can be in holdover when losing phase. In such case, its default clock class is defined based on the available frequency source quality.
- The telecom time client/subordinate clock (T-TSC) synchronizes its local clock to another PTP clock (in most cases, the T-BC), and does not provide synchronization through PTP to any other device.
- The telecom boundary clock (T-BC) synchronizes its local clock to a T-GM or an upstream T-BC, and provides timing information to downstream T-BCs or T-TSCs. If at a given point in time there are no higher-quality clocks available to a T-BC to synchronize to, it may act as a grandmaster.

The following figure describes a sample G.8275.1 topology.

Figure 1: A Sample G.8275.1 Topology

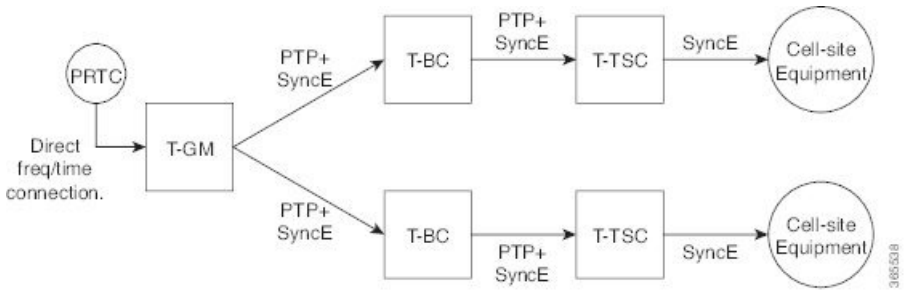

PTP Domain

A PTP domain is a logical grouping of clocks that communicate with each other using the PTP protocol.

A single computer network can have multiple PTP domains operating separately, for example, one set of clocks synchronized to one time scale and another set of clocks synchronized to another time scale. PTP can run over either Ethernet or IP, so a domain can correspond to a local area network or it can extend across a wide area network.

The allowed domain numbers of PTP domains within a G.8275.1 network are between 24 and 43 (both inclusive).

PTP Messages and Transport

The following PTP transport parameters are defined:

- For transmitting PTP packets, either the forwardable multicast MAC address (01-1B-19-00-00-00) or the non-forwardable multicast MAC address (01-80-C2-00-00-0E) must be used as the destination MAC address. The MAC address in use is selected on a per-port basis through the configuration. However, the non-forwardable multicast MAC address (01-80-C2-00-00-0E) will be used if no destination MAC is configured.

The source MAC address is the interface MAC address.

- For receiving PTP packets, both multicast MAC addresses (01-80-C2-00-00-0E and 01-1B-19-00-00-00) are supported.

- The packet rate for Announce messages is 8 packets-per-second. For Sync, Delay-Req, and Delay-Resp messages, the rate is 16 packets-per-second.
- Signaling and management messages are not used.

PTP Modes

Two-Way Operation

To transport phase and time synchronization and to measure propagation delay, PTP operation must be two-way in this profile. Therefore, only two-way operation is allowed in this profile.

One-Step and Two-Step Clock Mode

Both one-step and two-step clock modes are supported in the G.8275.1 profile.

A subordinate port must be capable of receiving and processing messages from both one-step clocks and two-step clocks, without any particular configuration. However, the primary clock supports only one-step mode.

PTP Clocks

Two types of ordinary clocks and boundary clocks are used in this profile:

Ordinary Clock (OC)

1. OC that can only be a grandmaster clock (T-GM). In this case, one or more PTP ports will be used as server ports.

   The T-GM uses the frequency, 1PPS, and ToD input from an upstream grandmaster clock.

Note The T-GM server port is a fixed server port.

Figure 2: Ordinary Clock As T-GM

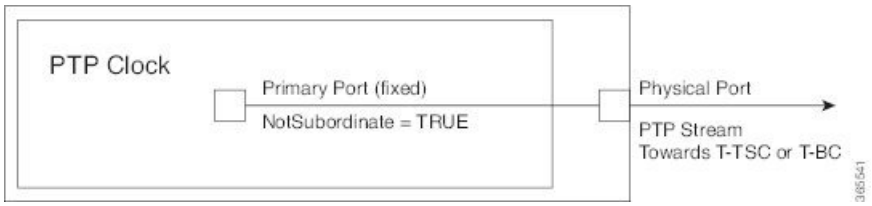

2. OC that can only be a subordinate/client clock (T-TSC). In this case, only one PTP port is used for T-TSC, which in turn will have only one PTP server clock associated with it.

Figure 3: Ordinary Clock As Subordinate/Client Clock (T-TSC)

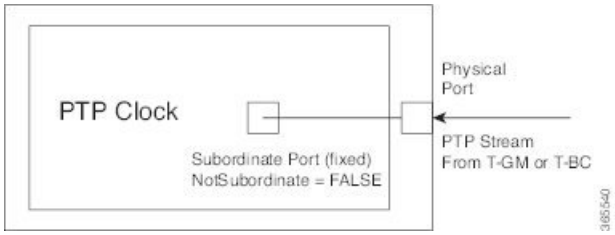

Boundary Clock (T-BC)

1. T-BC that can only be a grandmaster clock (T-GM).
2. T-BC that can become a server clock and can also be a server clock to another PTP clock.

If the BMCA selects a port on the T-BC to be a server port, all other ports are moved into the server role or a passive state.

Figure 4: Boundary Clock

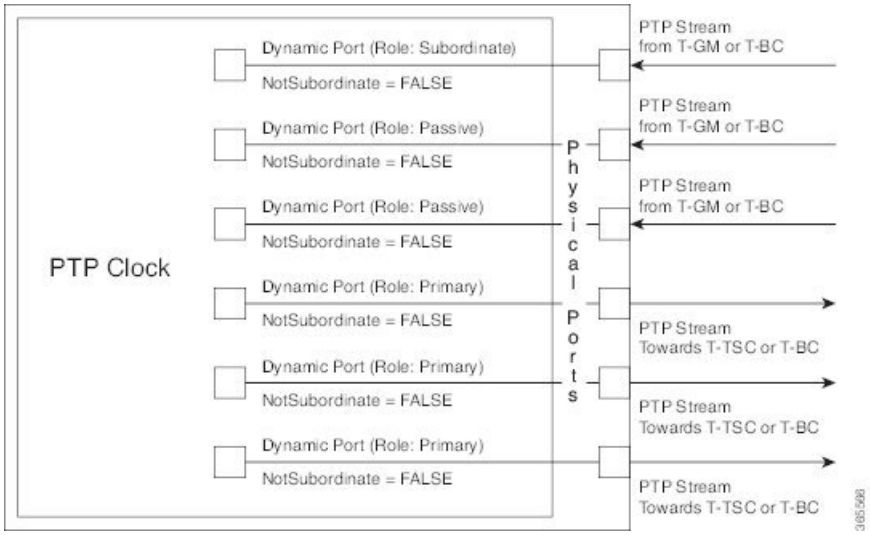

PTP Ports

A port can be configured to perform either fixed server or client role or can be configured to change its role dynamically. If no role is assigned to a port, it can dynamically assume a server, passive, or client role based on the BMCA.

A server port provides the clock to its downstream peers.

A client port receives clock from an upstream peer.

A dynamic port can work either as a server or a client clock based on the BMCA decision.

In Cisco's implementation of the G.8275.1:

- OC clocks can support only fixed server or client port.
- One PTP port can communicate with only one PTP peer.

- BC can have a maximum of 64 ports. Fixed client ports are not supported on the BC.

Virtual Port Support on T-BC

G.8275.1 introduces the concept of a virtual port on the T-BC. A virtual port is an external frequency, phase and time input interface on a T-BC, which can participate in the source selection.

Alternate Best Primary Clock Algorithm

Note The BMCA is referred to as the Best Primary Clock Algorithm in this document.

The Best Primary Clock Algorithm implementation in G.8275.1 is different from that in the default PTP profile. The G.8275.1 implementation is called the Alternate Best Primary Clock Algorithm. Each device uses the alternate Best Primary Clock Algorithm to select a clock to synchronize to, and to decide the port states of its local ports.

Benefits

With upcoming technologies like LTE-TDD, LTE-A CoMP, LTE-MBSFN and Location-based services, eNodeBs (base station devices) are required to be accurately synchronized in phase and time. Having GNSS systems at each node is not only expensive, but also introduces vulnerabilities. The G.8275.1 profile meets the synchronization requirements of these new technologies.

Prerequisites for Using the G.8275.1 Profile

- PTP over Multicast Ethernet must be used.
- Every node in the network must be PTP aware.
- It is mandatory to have a stable physical layer frequency whilst using PTP to define the phase.
- Multiple active grandmasters are recommended for redundancy.

Restrictions for Using the G.8275.1 Profile

- PTP Transparent clocks aren’t permitted in this profile.
- Changing the PTP profile under an existing clock configuration isn’t allowed. Different ports under the same clock can’t have different profiles. You must remove the clock configuration before changing the PTP profile. Only removing all the ports under a clock isn’t sufficient.
- One PTP port is associated with only one physical port in this profile.
- There’s no support for BDI and VLAN.
- Signaling and management messages aren’t used.
- PTP message rates aren’t configurable.
- Non-hybrid T-TSC and T-BC clock configurations aren’t supported.

- ITU-T G.8273.2 requires that standardized performance testing for boundary clocks to be conducted using *perfect inputs*, which means zero traffic load. When 1GE interfaces experience high utilization (for example, over 40-50%), the resulting time error may exceed the G.8273.2 Class A limits. If your application demands the highest level of time accuracy, we suggest configuring PTP and data traffic on separate interfaces. This is because a hardware limitation causes packet delay variations on the following Cisco ASR 920 Series Routers when configured with the G8275.1 profile on 1GE interfaces: ASR-920-12CZ-A/D, ASR-920-4SZ-A/D, ASR-920-24SZ-IM/M, ASR-920-24TZ-M, ASR-920-12SZ-IM.

Configuring the G.8275.1 Profile

Note To know more about the commands referenced in this module, see the Cisco IOS Interface and Hardware Component Command Reference or the Cisco IOS Master Command List.

Configuring Physical Frequency Source

For more information, see the Configuring Synchronous Ethernet ESMC and SSM section in the Clocking and Timing chapter of this book.

Creating a Server-Only Ordinary Clock

```
ptp clock ordinary domain 24
local-priority 1
priority2 128
clock-port server-port-1 master profile g8275.1 local-priority 1
transport ethernet multicast interface Gig 0/0/1
clock-port server-port-2 master profile g8275.1
transport ethernet multicast interface Gig 0/0/2
clock-port server-port-3 master profile g8275.1
transport ethernet multicast interface Gig 0/0/3
clock-port server-port-4 master profile g8275.1
transport ethernet multicast interface  Gig 0/0/4
```

Note It is mandatory that when electrical ToD is used, the **utc-offset** command is configured *before* configuring the **tod R0**, otherwise there will be a time difference of approximately 37 seconds between the server and client clocks.

The following example shows that the utc-offset is configured before configuring the ToD to avoid a delay of 37 seconds between the server and client clocks:

```
ptp clock ordinary domain 0
 utc-offset 37
tod R0 cisco
input 1pps R0
clock-port server-port master
  transport ipv4 unicast interface Loopback0 negotiation
```

Associated Commands

- ptp clock
- local-priority
- priority2

Creating an Ordinary Subordinate

```
ptp clock ordinary domain 24 hybrid
clock-port subordinate-port slave profile g8275.1
transport ethernet multicast interface Gig 0/0/0
```

Creating Dynamic Ports

Note Dynamic ports can be created when you do not specify whether a port is server or client. In such cases, the BMCA dynamically choses the role of the port.

```
ptp clock boundary domain 24 hybrid
time-properties persist 600
utc-offset 45 leap-second "01-01-2017 00:00:00" offset 1
clock-port bc-port-1 profile g8275.1 local-priority 1
transport ethernet multicast interface Gig 0/0/0
clock-port bc-port-2 profile g8275.1 local-priority 2
transport ethernet multicast interface Gig 0/0/1
```

Configuring Virtual Ports

Restrictions

- Virtual port configuration is not allowed under Ordinary Clocks.
- Virtual port configuration is not supported under non-hybrid T-BC cases.

```
ptp clock boundary domain 24 hybrid
utc-offset 45 leap-second "01-01-2017 00:00:00" offset 1
virtual-port virtual-port-1 profile g8275.1 local-priority 1
input 1pps R0
input tod R0 ntp
```

Note It is mandatory that when electrical ToD is used, the **utc-offset** command is configured *before* configuring the **tod R0**, otherwise there will be a time difference of approximately 37 seconds between the server and client clocks.

Associated Commands

input

Verifying the Local Priority of the PTP Clock

```
Router# show ptp clock dataset default
CLOCK [Boundary Clock, domain 24]
  Two Step Flag: No
  Clock Identity: 0x2A:0:0:0:58:67:F3:4
  Number Of Ports: 1
  Priority1: 128
  Priority2: 90
  Local Priority: 200
  Domain Number: 24
  Slave Only: No
  Clock Quality:
    Class: 224
    Accuracy: Unknown
    Offset (log variance): 4252
```

Verifying the Port Parameters

```
Router# show ptp port dataset port
PORT [SERVER]
  Clock Identity: 0x49:BD:D1:0:0:0:0:0
  Port Number: 0
  Port State: Unknown
  Min Delay Req Interval (log base 2): 42
  Peer Mean Path Delay: 648518346341351424
  Announce interval (log base 2): 0
  Announce Receipt Timeout: 2
  Sync Interval (log base 2): 0
  Delay Mechanism: End to End
  Peer Delay Request Interval (log base 2): 0
  PTP version: 2
  Local Priority: 1
  Not-slave: True
```

Verifying the Foreign Master Information

```
Router# show platform software ptp foreign-master domain 24
PTPd Foreign Master Information:

Current Master: SLA

Port: SLA
  Clock Identity: 0x74:A2:E6:FF:FE:5D:CE:3F
  Clock Stream Id: 0
  Priority1: 128
  Priority2: 128
  Local Priority: 128
  Clock Quality:
    Class: 6
    Accuracy: Within 100ns
    Offset (Log Variance): 0x4E5D
```

```
  Steps Removed: 1
  Not-Slave: FALSE
```

Verifying Current PTP Time

```
Router# show platform software ptpd tod
PTPd ToD information:

Time: 01/05/70 06:40:59
```

Verifying the Virtual Port Status

```
Router# show ptp port virtual domain 24
VIRTUAL PORT [vp]
  Status: down
  Clock Identity: 0x74:A2:E6:FF:FE:5D:CE:3F
  Port Number: 1
  Clock Quality:
    Class: 6
    Accuracy: 0x21
    Offset (log variance): 0x4E5D
  Steps Removed: 0
  Priority1: 128
  Priority2: 128
  Local Priority: 128
  Not-slave: False
```

G.8275.1 Deployment Scenario

The following example illustrates a possible configuration for a G.8275.1 network with two server clocks, a boundary clock and a client. Let's assume that server A is the server clock and B is the backup server clock.

Figure 5: Topology for a Configuration Example

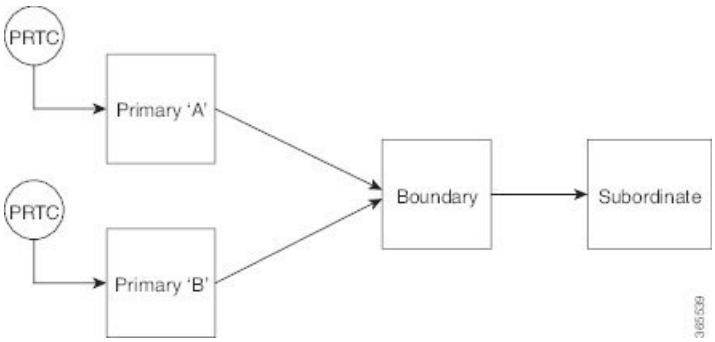

The configuration on server clock A is:

```
ptp clock ordinary domain 24
clock-port server-port profile g8275.1
transport ethernet multicast interface GigabitEthernet 0/0/0
```

The configuration on server clock B is:

```
ptp clock ordinary domain 25
 clock-port server-port profile g8275.1
transport ethernet multicast interface GigabitEthernet 0/1/0
```

The configuration on the boundary clock is:

```
ptp clock boundary domain 24 hybrid
  local-priority 3
  clock-port client-port-a profile g8275.1 local-priority 1
    transport ethernet multicast interface Gig 0/0/1
  clock-port client-port-b profile g8275.1 local-priority 2
    transport ethernet multicast interface Gig 0/1/1
  clock-port server-port profile g8275.1
    transport Ethernet multicast interface Gig 0/2/1
```

The configuration on the client clock is:

```
ptp clock ordinary domain 24 hybrid
  clock-port client-port slave profile g8275.1
    transport Ethernet multicast interface Gig 0/0/0
```

Feature Information for G.8275.1

Use Cisco Feature Navigator to find information about platform support and software image support. Cisco Feature Navigator enables you to determine which software images support a specific software release, feature set, or platform. To access Cisco Feature Navigator, go to http://www.cisco.com/go/cfn . An account on Cisco.com is not required.

Note Table 1: Feature Information for G.8275.1 , on page 11 lists only the software release that introduced support for a given feature in a given software release train. Unless noted otherwise, subsequent releases of that software release train also support that feature.

Table 1: Feature Information for G.8275.1

Feature Name	Releases	Feature Information
G.8275.1–Support for 1588 profile	XE 3.18	This PTP telecom profile introduces phase and time synchronization with full timing support from the network. The following commands were introduced • **local-priority** The following commands were modified: • **clock-port** • **show ptp clock dataset default** • **show ptp port dataset port** The following command is deprecated for the G.8275.1 profile clocks: • **show ptp port running** The alternate command is **show platform software ptp foreign-master [domain-number].** **Note** This command is applicable only for the G.8275.1 profile clocks.