Using Link Layer Discovery Protocol in Multivendor Networks

Link Layer Discovery Protocol (LLDP), standardized by the IEEE as part of 802.1ab, enables standardized discovery of nodes, which in turn facilitates future applications of standard management tools such as Simple Network Management Protocol (SNMP) in multivendor networks. Using standard management tools makes physical topology information available and helps network administrators detect and correct network malfunctions and inconsistencies in configuration.

Media Endpoint Discovery (MED) is an LLDP enhancement that was formalized by the Telecommunications Industry Association (TIA) for voice over IP (VoIP) applications.

The Cisco implementation of LLDP is based on the IEEE 802.1ab standard. This document describes LLDP and LLDP-MED and how they are supported in Cisco software.

- Prerequisites for Using Link Layer Discovery Protocol in Multivendor Networks, on page 1
- Restrictions for Using Link Layer Discovery Protocol in Multivendor Networks, on page 2
- Information About Using Link Layer Discovery Protocol in Multivendor Networks, on page 2
- How to Configure Link Layer Discovery Protocol in Multivendor Networks, on page 6
- Configuration Examples for Link Layer Discovery Protocol in Multivendor Networks, on page 16

Prerequisites for Using Link Layer Discovery Protocol in Multivendor Networks

- Type-Length-Value (TLV) types 0 through 127
- To support LLDP-MED, the following organizationally specific TLVs must be implemented:
  - Extended Power-via-Media Dependent Interface (MDI)
  - Inventory
  - LLDP-MED Capabilities
  - MAC/PHY Configuration Status
  - Network Policy
  - Port VLAN ID

Restrictions for Using Link Layer Discovery Protocol in Multivendor Networks

- Use of LLDP is limited to 802.1 media types such as Ethernet, Token Ring, and Fiber Distributed Data Interface (FDDI) networks.
- The maximum number of neighbor entries per chassis is limited on MED-capable network connectivity devices.

Information About Using Link Layer Discovery Protocol in Multivendor Networks

IEEE 802.1ab LLDP

IEEE 802.1ab Link Layer Discovery Protocol (LLDP) is an optional link layer protocol for network topology discovery in multivendor networks. Discovery information includes device identifiers, port identifiers, versions, and other details. As a protocol that aids network management, LLDP provides accurate network mapping, inventory data, and network troubleshooting information.

LLDP is unidirectional, operating only in an advertising mode. LLDP does not solicit information or monitor state changes between LLDP nodes. LLDP periodically sends advertisements to a constrained multicast address. Devices supporting LLDP can send information about themselves while they receive and record information about their neighbors. Additionally, devices can choose to turn off the send or receive functions independently. Advertisements are sent out and received on every active and enabled interface, allowing any device in a network to learn about all devices to which it is connected. Applications that use this information include network topology discovery, inventory management, emergency services, VLAN assignment, and inline power supply.

Note LLDP and Cisco Discovery Protocol can operate on the same interface.

The figure below shows a high-level view of LLDP operating in a network node.

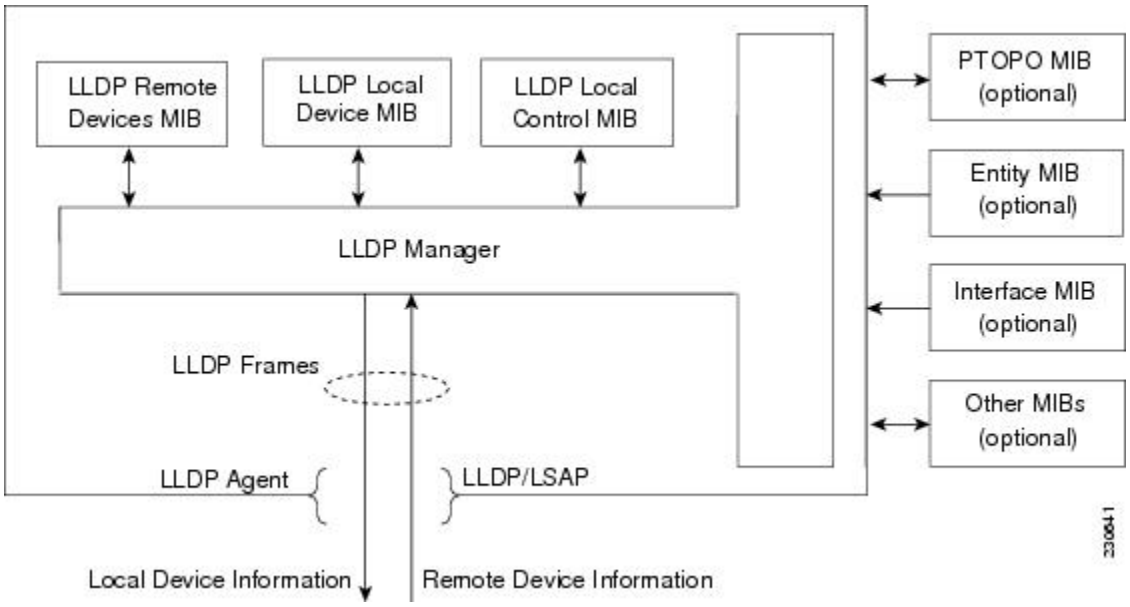

When you configure LLDP or Cisco Discovery Protocol location information on a per-port basis, remote devices can send Cisco medianet location information to the switch. For more information, see the *Using Cisco Discovery Protocol module.*

LLDP-MED

LLDP-MED operates between several classes of network equipment such as IP phones, conference bridges, and network connectivity devices such as routers and switches. By default, a network connectivity device sends out only LLDP packets until it receives LLDP-MED packets from an endpoint device. The network device then sends out LLDP-MED packets until the remote device to which it is connected ceases to be LLDP-MED capable.

Classes of Endpoints

LLDP-MED network connectivity devices provide IEEE 802 network access to LLDP-MED endpoints. LLDP-MED supports the following three classes of endpoints:

- Generic (class 1)—Basic participant endpoints; for example, IP communications controllers.
- Media (class 2)—Endpoints that support media streams; for example, media gateways and conference bridges.
- Communication Device (class 3)—Endpoints that support IP communications end users; for example, IP phones and Softphone.

The figure below shows an LLDP-MED-enabled LAN.

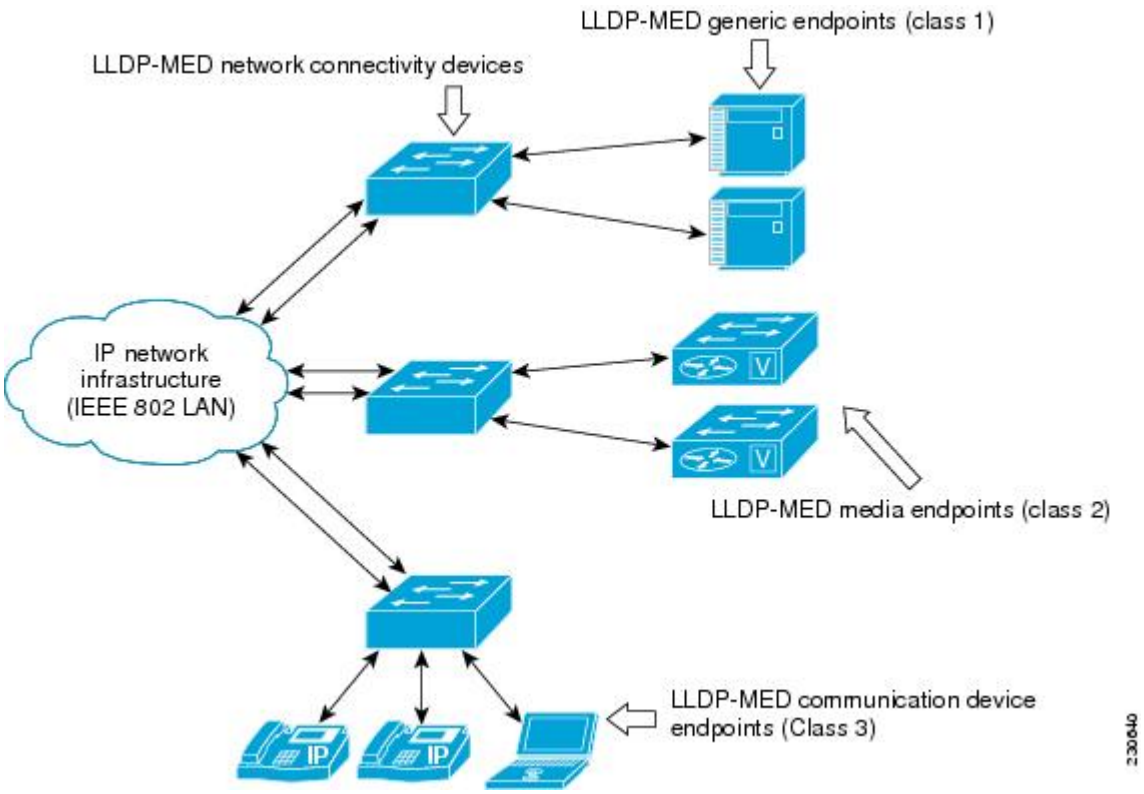

Types of Discovery Supported

LLDP-MED provides support to discover the following types of information, which are crucial to efficient operation and management of endpoint devices and the network devices supporting them:

- **Capabilities** —Endpoints determine the types of capabilities that a connected device supports and which ones are enabled.
- **Inventory** —LLDP-MED support exchange of hardware, software, and firmware versions, among other inventory details.
- **LAN speed and duplex** —Devices discover mismatches in speed and duplex settings.
- **Location identification** —An endpoint, particularly a telephone, learns its location from a network device. This location information may be used for location-based applications on the telephone and is important when emergency calls are placed.
- **Network policy** —Network connectivity devices notify telephones about the VLANs they should use.
- **Power** —Network connectivity devices and endpoints exchange power information. LLDP-MED provides information about how much power a device needs and how a device is powered. LLDP-MED also determines the priority of the device for receiving power.

Benefits of LLDP-MED

- Follows an open standard
- Supports E-911 emergency service, which is aided by location management

- Provides fast start capability
- Supports interoperability between multivendor devices
- Supports inventory management (location, version, etc.)
- Provides MIB support
- Supports plug and play installation
- Provides several troubleshooting (duplex, speed, network policy) mechanisms

TLV Elements

Link Layer Discovery Protocol (LLDP) and LLDP-Media Endpoint Discovery (MED) use Type-Length-Values (TLVs) to exchange information between network and endpoint devices. TLV elements are embedded in communications protocol advertisements and used for encoding optional information. The size of the type and length fields is fixed at 2 bytes. The size of the value field is variable. The type is a numeric code that indicates the type of field that this part of the message represents, and the length is the size of the value field, in bytes. The value field contains the data for this part of the message.

LLDP-MED supports the following TLVs:

- LLDP-MED capabilities TLV—Allows LLDP-MED endpoints to determine the capabilities that the connected device supports and has enabled.
- Network policy TLV—Allows both network connectivity devices and endpoints to advertise VLAN configurations and associated Layer 2 and Layer 3 attributes for the specific application on that port. For example, the switch can notify a phone of the VLAN number that it should use. The phone can connect to any switch, obtain its VLAN number, and then start communicating with the call control.

By defining a network-policy profile TLV, you can create a profile for voice and voice signalling by specifying the values for VLAN, class of service (CoS), differentiated services code point (DSCP), and tagging mode. These profile attributes are then maintained centrally on the switch and propagated to the phone.

- Power management TLV—Enables advanced power management between LLDP-MED endpoint and network connectivity devices. Allows switches and phones to convey power information, such as how the device is powered, power priority, and how much power the device needs. Supports advertisement of fractional wattage power requirements, endpoint power priority, and endpoint and network connectivity-device power status but does not provide for power negotiation between the endpoint and the network connectivity devices. When LLDP is enabled and power is applied to a port, the power TLV determines the actual power requirement of the endpoint device so that the system power budget can be adjusted accordingly. The switch processes the requests and either grants or denies power based on the current power budget. If the request is granted, the switch updates the power budget. If the request is denied, the switch turns off power to the port, generates a syslog message, and updates the power budget. If LLDP-MED is disabled or if the endpoint does not support the LLDP-MED power TLV, the initial allocation value is used throughout the duration of the connection.

Note A system power budget is the default power allocated to a device based on its device class. However, the total power that can be sourced from a switch is finite, and there will be some power budgeting done by the power module based on the number of ports already being served, total power that can be served, and how much new ports are requesting.

- Inventory management TLV—Allows an endpoint to send detailed inventory information about itself to the switch, including information hardware revision, firmware version, software version, serial number, manufacturer name, model name, and asset ID TLV.
- Location TLV—Provides location information from the switch to the endpoint device. The location TLV can send this information:
  - Civic location information—Provides the civic address information and postal information. Examples of civic location information are street address, road name, and postal community name information.
  - ELIN location information—Provides the location information of a caller. The location is determined by the Emergency location identifier number (ELIN), which is a phone number that routes an emergency call to the local public safety answering point (PSAP) and which the PSAP can use to call back the emergency caller.

Benefits of LLDP

- Follows IEEE 802.1ab standard.
- Enables interoperability among multivendor devices.
- Facilitates troubleshooting of enterprise networks and uses standard network management tools.
- Provides extension for applications such as VoIP.

How to Configure Link Layer Discovery Protocol in Multivendor Networks

Enabling and Disabling LLDP Globally

LLDP is disabled globally by default. This section describes the tasks for enabling and disabling LLDP globally.

Enabling LLDP Globally

Perform this task to enable LLDP globally.

SUMMARY STEPS

1. **enable**
2. **configure terminal**
3. **lldp run**
4. **end**

DETAILED STEPS

	Command or Action	Purpose
Step 1	**enable**	Enables privileged EXEC mode.

	Command or Action	Purpose
	Example: `Device> enable`	• Enter your password if prompted.
Step 2	**configure terminal** **Example:** `Device# configure terminal`	Enters global configuration mode.
Step 3	**lldp run** **Example:** `Device(config)# lldp run`	Enables LLDP globally. **Note** To disable LLDP globally, use the **no lldp run** command.
Step 4	**end** **Example:** `Device(config)# end`	Returns to privileged EXEC mode.

Disabling LLDP Globally

Perform this task to disable LLDP globally.

SUMMARY STEPS

1. **enable**
2. **configure terminal**
3. **no lldp run**
4. **end**

DETAILED STEPS

	Command or Action	Purpose
Step 1	**enable** **Example:** `Device> enable`	Enables privileged EXEC mode. • Enter your password if prompted.
Step 2	**configure terminal** **Example:** `Device# configure terminal`	Enters global configuration mode.
Step 3	**no lldp run** **Example:** `Device(config)# no lldp run`	Disables LLDP globally.

	Command or Action	Purpose
Step 4	**end** **Example:** `Device(config)# end`	Returns to privileged EXEC mode.

Disabling and Enabling LLDP on a Supported Interface

LLDP is enabled by default on all supported interfaces. This section describes the tasks for disabling and enabling LLDP on a supported interface.

Disabling LLDP on a Supported Interface

Perform this task to disable LLDP on a supported interface.

SUMMARY STEPS

1. **enable**
2. **configure terminal**
3. **interface** *type number*
4. **no lldp** {**med-tlv-select** *tlv* | **receive** | **transmit**}
5. **end**

DETAILED STEPS

	Command or Action	Purpose
Step 1	**enable** **Example:** `Device> enable`	Enables privileged EXEC mode. • Enter your password if prompted.
Step 2	**configure terminal** **Example:** `Device# configure terminal`	Enters global configuration mode.
Step 3	**interface** *type number* **Example:** `Device(config)# interface Gigabitethernet 0/1`	Specifies the interface type and number and enters interface configuration mode.
Step 4	**no lldp** {**med-tlv-select** *tlv* | **receive** | **transmit**} **Example:** `Device(config-if)# no lldp receive`	Disables an LLDP-MED TLV or LLDP packet reception on a supported interface. **Note** To enable LLDP on a Supported Interface, use the **lldp** {**med-tlv-select** *tlv* | **receive** | **transmit** command.

	Command or Action	Purpose
Step 5	**end** **Example:** `Device(config-if)# end`	Returns to privileged EXEC mode.

Enabling LLDP on a Supported Interface

LLDP information can be transmitted and received only on an interface where LLDP is configured and enabled. Perform this task to enable LLDP.

SUMMARY STEPS

1. **enable**
2. **configure terminal**
3. **interface** *type number*
4. **lldp** {**med-tlv-select** *tlv* | **receive** | **transmit**}
5. **end**

DETAILED STEPS

	Command or Action	Purpose
Step 1	**enable** **Example:** `Device> enable`	Enables privileged EXEC mode. • Enter your password if prompted.
Step 2	**configure terminal** **Example:** `Device# configure terminal`	Enters global configuration mode.
Step 3	**interface** *type number* **Example:** `Device(config)# interface ethernet 0/1`	Specifies the interface type and number and enters interface configuration mode.
Step 4	**lldp** {**med-tlv-select** *tlv* | **receive** | **transmit**} **Example:** `Device(config-if)# lldp transmit`	Enables an LLDP-MED TLV or LLDP packet transmission on a supported interface.
Step 5	**end** **Example:** `Device(config-if)# end`	Returns to privileged EXEC mode.

Setting LLDP Packet Hold Time

Hold time is the duration that a receiving device should maintain LLDP neighbor information before aging it. Perform this task to define a hold time for an LLDP-enabled device.

SUMMARY STEPS

1. **enable**
2. **configure terminal**
3. **lldp holdtime** *seconds*
4. **end**

DETAILED STEPS

	Command or Action	Purpose
Step 1	**enable** **Example:** `Device> enable`	Enables privileged EXEC mode. • Enter your password if prompted.
Step 2	**configure terminal** **Example:** `Device# configure terminal`	Enters global configuration mode.
Step 3	**lldp holdtime** *seconds* **Example:** `Device(config)# lldp holdtime 100`	Specifies the hold time.
Step 4	**end** **Example:** `Device(config)# end`	Returns to privileged EXEC mode.

Setting LLDP Packet Frequency

Perform this task to specify an interval at which the Cisco software sends LLDP updates to neighboring devices.

SUMMARY STEPS

1. **enable**
2. **configure terminal**
3. **lldp timer** *rate*
4. **end**

DETAILED STEPS

	Command or Action	Purpose
Step 1	**enable** **Example:** `Device> enable`	Enables privileged EXEC mode. • Enter your password if prompted.
Step 2	**configure terminal** **Example:** `Device# configure terminal`	Enters global configuration mode.
Step 3	**lldp timer** *rate* **Example:** `Device(config)# lldp timer 75`	Specifies the rate at which LLDP packets are sent every second.
Step 4	**end** **Example:** `Device(config)# end`	Returns to privileged EXEC mode.

Monitoring and Maintaining LLDP in Multivendor Networks

Perform this task to monitor and maintain LLDP in multivendor networks. This task is optional, and Steps 2 and 3 can be performed in any sequence.

SUMMARY STEPS

1. **enable**
2. **show lldp** [**entry** {***** | *word*} | **errors** | **interface** [**ethernet** *number*]| **neighbors** [**ethernet** *number*| **detail**]| **traffic**]
3. **clear lldp** {**counters** | **table**}
4. **end**

DETAILED STEPS

	Command or Action	Purpose
Step 1	**enable** **Example:** `Device> enable`	Enables privileged EXEC mode. • Enter your password if prompted.
Step 2	**show lldp** [**entry** {*****	*word*}	**errors**	**interface** [**ethernet** *number*]| **neighbors** [**ethernet** *number*| **detail**]| **traffic**]	Displays summarized and detailed LLDP information.

	Command or Action	Purpose
	Example: `Device# show lldp entry *`	**Note** When the **show lldp neighbors** command is issued, if the device ID has more than 20 characters, the ID is truncated to 20 characters in command output because of display constraints.
Step 3	**clear lldp** {**counters** | **table**} **Example:** `Device# clear lldp counters`	Resets LLDP traffic counters and tables to zero.
Step 4	**end** **Example:** `Device# end`	Returns to user EXEC mode.

Enabling and Disabling LLDP TLVs

LLDP TLV support is enabled by default if LLDP is enabled globally and locally on a supported interface. Specific TLVs, however, can be enabled and suppressed.

Enabling LLDP TLVs

Perform this task to enable an LLDP TLV on a supported interface.

SUMMARY STEPS

1. **enable**
2. **configure terminal**
3. **interface** *type number*
4. **lldp tlv-select** *tlv*
5. **end**

DETAILED STEPS

	Command or Action	Purpose
Step 1	**enable** **Example:** `Device> enable`	Enables privileged EXEC mode. • Enter your password if prompted.
Step 2	**configure terminal** **Example:** `Device# configure terminal`	Enters global configuration mode.

	Command or Action	Purpose
Step 3	**interface** *type number* **Example:** `Device(config)# interface Gigabitethernet 0/1`	Specifies the interface type and number on which to enable LLDP-MED and enters interface configuration mode.
Step 4	**lldp tlv-select** *tlv* **Example:** `Device(config-if)# lldp tlv-select power-management`	Enables a specific LLDP TLV on a supported interface. **Note** To disable LLDP TLVs, use the **no lldp tlv-select** *tlv*
Step 5	**end** **Example:** `Device(config-if)# end`	Returns to privileged EXEC mode.

Disabling LLDP TLVs

Perform this task to disable an LLDP TLV on a supported interface.

SUMMARY STEPS

1. **enable**
2. **configure terminal**
3. **interface** *type number*
4. **no lldp tlv-select** *tlv*
5. **end**

DETAILED STEPS

	Command or Action	Purpose
Step 1	**enable** **Example:** `Device> enable`	Enables privileged EXEC mode. • Enter your password if prompted.
Step 2	**configure terminal** **Example:** `Device# configure terminal`	Enters global configuration mode.
Step 3	**interface** *type number* **Example:** `Device(config)# interface ethernet 0/1`	Specifies the interface type and number on which to disable LLDP-MED and enters interface configuration mode.

	Command or Action	Purpose
Step 4	**no lldp tlv-select** *tlv* **Example:** `Device(config-if)# no lldp tlv-select system-description`	Disables a specific LLDP TLV on a supported interface.
Step 5	**end** **Example:** `Device(config-if)# end`	Returns to privileged EXEC mode.

Enabling and Disabling LLDP-MED TLVs

LLDP-MED TLV support is enabled by default if LLDP is enabled globally and locally on a supported interface. Specific TLVs, however, can be enabled and suppressed.

Enabling LLDP-MED TLVs

Perform this task to enable a specific LLDP-MED TLV on a supported interface.

SUMMARY STEPS

1. **enable**
2. **configure terminal**
3. **interface** *type number*
4. **lldp med-tlv-select** *tlv*
5. **end**

DETAILED STEPS

	Command or Action	Purpose
Step 1	**enable** **Example:** `Device> enable`	Enables privileged EXEC mode. • Enter your password if prompted.
Step 2	**configure terminal** **Example:** `Device# configure terminal`	Enters global configuration mode.
Step 3	**interface** *type number* **Example:** `Device(config)# interface Gigabitethernet 0/1`	Specifies the interface type and number on which to enable LLDP-MED and enters interface configuration mode.

	Command or Action	Purpose
Step 4	**lldp med-tlv-select** *tlv* **Example:** `Device(config-if)# lldp med-tlv-select inventory-management`	Enables a specific LLDP-MED TLV on a supported interface. **Note** To disable LLDP-MED TLVs, use the **no lldp med-tlv-select** *tlv* command.
Step 5	**end** **Example:** `Device(config-if)# end`	Returns to privileged EXEC mode.

Disabling LLDP-MED TLVs

Perform this task to disable a specific LLDP-MED TLV from a supported interface.

SUMMARY STEPS

1. **enable**
2. **configure terminal**
3. **interface** *type number*
4. **no lldp med-tlv-select** *tlv*
5. **end**

DETAILED STEPS

	Command or Action	Purpose
Step 1	**enable** **Example:** `Device> enable`	Enables privileged EXEC mode. • Enter your password if prompted.
Step 2	**configure terminal** **Example:** `Device# configure terminal`	Enters global configuration mode.
Step 3	**interface** *type number* **Example:** `Device(config)# interface ethernet 0/1`	Specifies the interface type and number on which to disable LLDP-MED and enters interface configuration mode.
Step 4	**no lldp med-tlv-select** *tlv* **Example:** `Device(config-if)# no lldp med-tlv-select inventory-management`	Disables a specific LLDP-MED TLV from a supported interface.

	Command or Action	Purpose
Step 5	**end** **Example:** `Device(config-if)# end`	Returns to privileged EXEC mode.

Configuration Examples for Link Layer Discovery Protocol in Multivendor Networks

Example Configuring LLDP on Two Devices

The following example shows how to configure LLDP timer, hold time, and TLVs on two devices in a network. In each case we assume that the Ethernet interfaces being configured are in the UP state.

```
! Configure LLDP on Device 1 with hold time, timer, and TLV options.

Device1> enable
Device1# configure terminal
Device1(config)# lldp run
Device1(config)# lldp holdtime 150
Device1(config)# lldp timer 15
Device1(config)# lldp tlv-select port-vlan
Device1(config)# lldp tlv-select mac-phy-cfg
Device1(config)# interface ethernet 0/0
Device1(config-if)# end
00:08:32: %SYS-5-CONFIG_I: Configured from console by console
! Show the updated running configuration. LLDP is enabled with hold time, timer, and TLV
options configured.

Device1# show running-config

Building configuration...
Current configuration : 1397 bytes
!
version 12.2
service timestamps debug uptime
service timestamps log uptime
no service password-encryption
!
hostname Device1
!
boot-start-marker
boot-end-marker
!
!
no aaa new-model
clock timezone PST -8
ip subnet-zero
!
!
lldp timer 15
lldp holdtime 150
!
```

```
! Configure LLDP on Device 2 with hold time, timer, and TLV options.

Device2> enable
Device2# configure terminal
Enter configuration commands, one per line.  End with CNTL/Z.
Device2(config)# lldp run
Device2(config)# lldp holdtime 150
Device2(config)# lldp timer 15
Device2(config)# lldp tlv-select port-vlan
Device2(config)# lldp tlv-select mac-phy-cfg
Device2(config)# interface ethernet 0/0
Device2(config-if)# end
00:08:32: %SYS-5-CONFIG_I: Configured from console by console

! Show the updated running configuration on Device 2. LLDP is enabled with hold time, timer,
 and TLV options configured.

Device2# show running-config
Building configuration...
Current configuration : 1412 bytes
!
version 12.2
service timestamps debug uptime
service timestamps log uptime
no service password-encryption
!
hostname R2
!
boot-start-marker
boot-end-marker
!
!
no aaa new-model
clock timezone PST -8
ip subnet-zero
!
!
lldp timer 15
lldp holdtime 150
!


! After both devices are configured for LLDP, issue the show
 command from each device to view traffic and device information.

Device1# show lldp traffic
LLDP traffic statistics:
    Total frames out: 20
    Total entries aged: 0
    Total frames in: 15
    Total frames received in error: 0
    Total frames discarded: 0
    Total TLVs unrecognized: 0
Device1# show lldp neighbors
Capability codes:
    (R) Router, (B) Bridge, (T) Telephone, (C) DOCSIS Cable Device
    (W) WLAN Access Point, (P) Repeater, (S) Station, (O) Other
Device ID           Local Intf     Hold-time  Capability      Port ID
Device2             Et0/0          150        R               Et0/0
Total entries displayed: 1
Device2# show lldp traffic
LLDP traffic statistics:
```

```
    Total frames out: 15
    Total entries aged: 0
    Total frames in: 17
    Total frames received in error: 0
    Total frames discarded: 2
    Total TLVs unrecognized: 0
Device2# show lldp neighbors
Capability codes:
    (R) Router, (B) Bridge, (T) Telephone, (C) DOCSIS Cable Device
    (W) WLAN Access Point, (P) Repeater, (S) Station, (O) Other
Device ID           Local Intf     Hold-time  Capability      Port ID
Device1             Et0/0          150        R               Et0/0
Total entries displayed: 1
```