# Segment Routing Configuration Guide for Cisco ASR 9000 Series Routers, IOS XR Release 7.8.x

**First Published:** 2022-11-30

**Americas Headquarters**
Cisco Systems, Inc.
170 West Tasman Drive
San Jose, CA 95134-1706
USA
http://www.cisco.com
Tel: 408 526-4000
800 553-NETS (6387)
Fax: 408 527-0883

THE SPECIFICATIONS AND INFORMATION REGARDING THE PRODUCTS IN THIS MANUAL ARE SUBJECT TO CHANGE WITHOUT NOTICE. ALL STATEMENTS, INFORMATION, AND RECOMMENDATIONS IN THIS MANUAL ARE BELIEVED TO BE ACCURATE BUT ARE PRESENTED WITHOUT WARRANTY OF ANY KIND, EXPRESS OR IMPLIED. USERS MUST TAKE FULL RESPONSIBILITY FOR THEIR APPLICATION OF ANY PRODUCTS.

THE SOFTWARE LICENSE AND LIMITED WARRANTY FOR THE ACCOMPANYING PRODUCT ARE SET FORTH IN THE INFORMATION PACKET THAT SHIPPED WITH THE PRODUCT AND ARE INCORPORATED HEREIN BY THIS REFERENCE. IF YOU ARE UNABLE TO LOCATE THE SOFTWARE LICENSE OR LIMITED WARRANTY, CONTACT YOUR CISCO REPRESENTATIVE FOR A COPY.

The Cisco implementation of TCP header compression is an adaptation of a program developed by the University of California, Berkeley (UCB) as part of UCB's public domain version of the UNIX operating system. All rights reserved. Copyright © 1981, Regents of the University of California.

NOTWITHSTANDING ANY OTHER WARRANTY HEREIN, ALL DOCUMENT FILES AND SOFTWARE OF THESE SUPPLIERS ARE PROVIDED “AS IS" WITH ALL FAULTS. CISCO AND THE ABOVE-NAMED SUPPLIERS DISCLAIM ALL WARRANTIES, EXPRESSED OR IMPLIED, INCLUDING, WITHOUT LIMITATION, THOSE OF MERCHANTABILITY, FITNESS FOR A PARTICULAR PURPOSE AND NONINFRINGEMENT OR ARISING FROM A COURSE OF DEALING, USAGE, OR TRADE PRACTICE.

IN NO EVENT SHALL CISCO OR ITS SUPPLIERS BE LIABLE FOR ANY INDIRECT, SPECIAL, CONSEQUENTIAL, OR INCIDENTAL DAMAGES, INCLUDING, WITHOUT LIMITATION, LOST PROFITS OR LOSS OR DAMAGE TO DATA ARISING OUT OF THE USE OR INABILITY TO USE THIS MANUAL, EVEN IF CISCO OR ITS SUPPLIERS HAVE BEEN ADVISED OF THE POSSIBILITY OF SUCH DAMAGES.

Any Internet Protocol (IP) addresses and phone numbers used in this document are not intended to be actual addresses and phone numbers. Any examples, command display output, network topology diagrams, and other figures included in the document are shown for illustrative purposes only. Any use of actual IP addresses or phone numbers in illustrative content is unintentional and coincidental.

All printed copies and duplicate soft copies of this document are considered uncontrolled. See the current online version for the latest version.

Cisco has more than 200 offices worldwide. Addresses and phone numbers are listed on the Cisco website at www.cisco.com/go/offices.

Cisco and the Cisco logo are trademarks or registered trademarks of Cisco and/or its affiliates in the U.S. and other countries. To view a list of Cisco trademarks, go to this URL: https://www.cisco.com/c/en/us/about/legal/trademarks.html. Third-party trademarks mentioned are the property of their respective owners. The use of the word partner does not imply a partnership relationship between Cisco and any other company. (1721R)

© 2022 Cisco Systems, Inc. All rights reserved.

# CONTENTS


PREFACE

**Preface** xiii

Changes to This Document xiii

Communications, Services, and Additional Information xiii

CHAPTER 1

**New and Changed Information for Segment Routing Features** 1

New and Changed Segment Routing Features 1

CHAPTER 2

**YANG Data Models for Segment Routing Features** 3

Using YANG Data Models 3

CHAPTER 3

**About Segment Routing** 5

Scope 5

Need 6

Benefits 6

Workflow for Deploying Segment Routing 7

CHAPTER 4

**Configure Segment Routing over IPv6 (SRv6) with Micro-SIDs** 9

Segment Routing over IPv6 Overview 10

SRv6 Micro-Segment (uSID) 14

SRv6 uSID Terminology 15

SRv6 uSID Carrier Format 16

SRv6 uSID Allocation Within a uSID Block 16

SRv6 Endpoint Behaviors Associated with uSID 20

SRv6 uSID in Action - Example 20

Usage Guidelines and Limitations 25

Configuring SRv6 26

Configuring SRv6 under IS-IS 31
Configuring SRv6 Locator Metric and Tag 32
Configuring SRv6 Flexible Algorithm under IS-IS 33
Configuring SRv6 Locator Prefix Summarization 35
Configuring TI-LFA with SRv6 IS-IS 35
Configuring SRv6 IS-IS Microloop Avoidance 38
Configuring Static SIDs 39
Configuring Static Adjacency SIDs 39
Configuring Explicit End.DT46 SRv6 SIDs 41
Configuring Explicit SRv6 uSID Allocation Start Range 44
Configuring SRv6 BGP-Based Services 45
SRv6 Services: IPv4 L3VPN 47
SRv6 Services: IPv6 L3VPN 59
SRv6 Services: IPv4 BGP Global 71
SRv6 Services: IPv6 BGP Global 74
SRv6 Services: IPv4 L3VPN Active-Standby Redundancy using Port-Active Mode 80
SRv6 Services for L3VPN Active-Standby Redundancy using Port-Active Mode: Operation 81
Configure SRv6 Services L3VPN Active-Standby Redundancy using Port-Active Mode 81
SRv6 Services: IPv4 L3VPN Active-Active Redundancy 84
SRv6 Services: EVPN VPWS — All-Active Multi-Homing 86
SRv6-Services: EVPN ELAN Layer 2 Gateway With Automated Steering To Flexible Algorithm Paths 90
SRv6/MPLS L3 Service Interworking Gateway 96
SRv6/MPLS Dual-Connected PE 100
SRv6 Provider Edge (PE) Lite Support 102
SRv6 SID Information in BGP-LS Reporting 108
DHCPv4 Relay Agent and Proxy Support over SRv6 108
DHCPv6 Relay Agent Support over SRv6 109
Full-Replace Migration to SRv6 Micro-SID 109
Full-Replace Migration to SRv6 Micro-SID Restrictions 113

CHAPTER 5 **Configure Segment Routing over IPv6 (SRv6) with Full-Length SIDs** 115
Segment Routing over IPv6 Overview 115
Configuring SRv6 under IS-IS 124

Configuring SRv6 IS-IS Flexible Algorithm 125
Configuring SRv6 IS-IS TI-LFA 127
Configuring SRv6 IS-IS Microloop Avoidance 130
SRv6 Services: IPv4 L3VPN 131
SRv6 Services: IPv6 L3VPN 139
SRv6 Services: IPv4 L3VPN Active-Standby Redundancy using Port-Active Mode 148
SRv6 Services for L3VPN Active-Standby Redundancy using Port-Active Mode: Operation 149
Configure SRv6 Services L3VPN Active-Standby Redundancy using Port-Active Mode 149
Configuration Example 149
Running Configuration 150
Verification 150
SRv6 Services: BGP Global IPv4 152
SRv6 Services: BGP Global IPv6 155
SRv6 Services: EVPN VPWS — All-Active Multi-Homing 161
SRv6 Services: SRv6 Services TLV Type 5 Support 163
SRv6/MPLS L3 Service Interworking Gateway 163
SRv6/MPLS Dual-Connected PE 168
SRv6 SID Information in BGP-LS Reporting 169

CHAPTER 6 **Configure SRv6 Traffic Engineering** 171
SRv6-TE Overview 171
Usage Guidelines and Limitations 172
Traffic Steering 174
SRv6 Flexible Algorithm 174
Automated Steering 178
SRv6-TE Policy Path Types 179
Explicit Paths 180
Configure SRv6-TE Policy with Explicit Path 180
SRv6-TE Explicit Segment List SID Validation 184
Dynamic Paths 186
Optimization Objectives 187
Constraints 188
Configure SRv6 Policy with Dynamic Path 191
Protocols 196

Path Computation Element Protocol 196
Configure the Head-End Router as PCEP PCC 197

CHAPTER 7 **Configure Segment Routing Global Block and Segment Routing Local Block** 203
About the Segment Routing Global Block 203
About the Segment Routing Local Block 205
Understanding Segment Routing Label Allocation 206
Setup a Non-Default Segment Routing Global Block Range 209
Setup a Non-Default Segment Routing Local Block Range 210

CHAPTER 8 **Configure Segment Routing for IS-IS Protocol** 213
Enabling Segment Routing for IS-IS Protocol 213
Configuring a Prefix-SID on the IS-IS Enabled Loopback Interface 216
Configuring an Adjacency SID 218
Protected Adjacency SID Backup Timer 221
Manually Configure a Layer 2 Adjacency SID 222
Configuring Bandwidth-Based Local UCMP 225
IS-IS Prefix Attributes for Extended IPv4 and IPv6 Reachability 226
Prefix Attribute Flags 227
IPv4 and IPv6 Source Router ID 228
Configuring Prefix Attribute N-flag-clear 229
IS-IS Multi-Domain Prefix SID and Domain Stitching: Example 230
Configure IS-IS Multi-Domain Prefix SID 231
Configure Common Router ID 231
Distribute IS-IS Link-State Data 232
IS-IS Unreachable Prefix Announcement 233
Configuration Steps 234
Conditional Prefix Advertisement 235

CHAPTER 9 **Configure Segment Routing for OSPF Protocol** 237
Enabling Segment Routing for OSPF Protocol 237
Configuring a Prefix-SID on the OSPF-Enabled Loopback Interface 239
Configuring an Adjacency SID 241
Protected Adjacency SID Backup Timer 244

Conditional Prefix Advertisement 245

CHAPTER 10 **Configure Segment Routing for BGP** 247

Segment Routing for BGP 247

Configure BGP Prefix Segment Identifiers 248

Segment Routing Egress Peer Engineering 249

Usage Guidelines and Limitations 250

Configure Segment Routing Egress Peer Engineering 250

Configuring Manual BGP-EPE Peering SIDs 252

Configure BGP Link-State 255

Use Case: Configuring SR-EPE and BGP-LS 259

Configure BGP Proxy Prefix SID 261

BGP-LU Inter-AS Option-C Interworking with LDP and IGP SR-MPLS using Proxy BGP-SR 264

BGP Best Path Computation using SR Policy Paths 268

CHAPTER 11 **Configure SR-TE Policies** 275

SR-TE Policy Overview 275

Usage Guidelines and Limitations 276

Instantiation of an SR Policy 276

On-Demand SR Policy – SR On-Demand Next-Hop 277

SR-ODN/Automated Steering Support at ASBR for L3VPN Inter-AS Option B and L3VPN Inline Route Reflector 278

SR-ODN Configuration Steps 281

Configuring SR-ODN: Examples 284

Configuring SR-ODN for EVPN-VPWS: Use Case 293

Manually Provisioned SR Policy 313

PCE-Initiated SR Policy 313

Cumulative Metric Bounds (Delay-Bound Use-Case) 314

SR-TE BGP Soft Next-Hop Validation For ODN Policies 316

SR-TE Policy Path Types 318

Dynamic Paths 319

Optimization Objectives 319

Constraints 320

Configure SR Policy with Dynamic Path 324

Anycast SID-Aware Path Computation 326
Explicit Paths 326
SR-TE Policy with Explicit Path 326
Configuring Explicit Path with Affinity Constraint Validation 329
Explicit Path with Affinity Constraint Validation for Anycast SIDs 331
Configure Explicit Path with Segment Protection-Type Constraint 333
Protocols 334
Path Computation Element Protocol 334
Configure the Head-End Router as PCEP PCC 334
Configure SR-TE PCE Groups 339
BGP SR-TE 344
Configure BGP SR Policy Address Family at SR-TE Head-End 344
Traffic Steering 346
Automated Steering 346
Color-Only Automated Steering 347
Setting CO Flag 348
Address-Family Agnostic Automated Steering 349
Per-Flow Automated Steering 350
Using Binding Segments 355
Stitching SR-TE Polices Using Binding SID: Example 356
L2VPN Preferred Path 360
Static Route over Segment Routing Policy 360
Autoroute Include 362
Policy-Based Tunnel Selection for SR-TE Policy 364
Miscellaneous 365
SR Policy Liveness Monitoring 365
Programming Non-Active Candidate Paths of an SR Policy 366
LDP over Segment Routing Policy 372
Configure Seamless Bidirectional Forwarding Detection 375
Configure the SBFD Reflector 376
Configure the SBFD Initiator 377
SR-TE Head-End IPv4 Unnumbered Interface Support 382
Path Invalidation Drop 384
SR-TE Reoptimization Timers 387

Circuit-Style SR-TE Policies 389
SR-TE Policy Path Protection 402

CHAPTER 12 **Segment Routing Tree Segment Identifier** 407
Usage Guidelines and Limitations 411
Bud Node Support 412
Configure Static Segment Routing Tree-SID via CLI at SR-PCE 412
Running Config 414
Multicast VPN: Dynamic Tree-SID MVPN (with TI-LFA) 416
Multicast: SR-PCE High Availability (HA) Support for Dynamic Tree-SID (mVPN) 431
Limitations and Guidelines 441
Configuration Steps 442

CHAPTER 13 **Enabling Segment Routing Flexible Algorithm** 449
Prerequisites for Flexible Algorithm 449
Building Blocks of Segment Routing Flexible Algorithm 449
Flexible Algorithm Definition 449
Flexible Algorithm Membership 450
Flexible Algorithm Definition Advertisement 450
Flexible Algorithm Link Attribute Advertisement 450
Flexible Algorithm Prefix-SID Advertisement 451
Calculation of Flexible Algorithm Path 451
Installation of Forwarding Entries for Flexible Algorithm Paths 452
Flexible Algorithm Prefix-SID Redistribution 453
Flexible Algorithm Prefix Metric 455
Configuring Flexible Algorithm 456
Flexible Algorithm Link Attribute Advertisement Behavior 459
Strict IS-IS ASLA Link Attribute 461
Flexible Algorithm-Specific TE Metric 461
Flexible Algorithm with Exclude SRLG Constraint 462
Maximum Paths Per IS-IS Flexible Algorithm 465
Example: Configuring IS-IS Flexible Algorithm 466
Example: Configuring OSPF Flexible Algorithm 467
Example: Traffic Steering to Flexible Algorithm Paths 468

BGP Routes on PE – Color Based Steering 468

CHAPTER 14 **Configure Segment Routing Path Computation Element** 473

About SR-PCE 474

Usage Guidelines and Limitations 475

Configure SR-PCE 475

Configure the Disjoint Policy (Optional) 478

Global Maximum-delay Constraint 479

PCE-Initiated SR Policies 480

SR-PCE Flexible Algorithm Multi-Domain Path Computation 481

Example: SR-PCE Flexible Algorithm Multi-Domain Path Computation Use Case 482

ACL Support for PCEP Connection 486

Anycast SID-Aware Path Computation 486

SR-PCE IPv4 Unnumbered Interface Support 491

Inter-Domain Path Computation Using Redistributed SID 493

Example: Inter-Domain Path Computation Using Redistributed SID 494

Configuring the North-Bound API on SR-PCE 496

CHAPTER 15 **Configure Performance Measurement** 499

Liveness Monitoring 500

IP Endpoint Liveness Monitoring 500

IP Endpoint Liveness Detection in an SR MPLS Network 502

SR Policy Liveness Monitoring 505

Configure SR Policy Liveness Monitoring in an MPLS Network 507

Delay Measurement 511

Measurement Modes 512

Link Delay Measurement 515

Delay Normalization 527

Link Anomaly Detection with IGP Penalty 530

Delay Measurement for IP Endpoint 531

IP Endpoint Delay Measurement over MPLS Network Usecases 532

SR Policy End-to-End Delay Measurement 540

Path Tracing in SRv6 Network 548

Limitations and Guidelines 549

Configure Midpoint, Sink, and Source Nodes 549

CHAPTER 16 **Configure Topology-Independent Loop-Free Alternate (TI-LFA)** 553

Usage Guidelines and Limitations 555

Configuring TI-LFA for IS-IS 557

Configuring TI-LFA for OSPF 558

TI-LFA Node and SRLG Protection: Examples 560

Configuring Global Weighted SRLG Protection 561

SR-MPLS over GRE as TI-LFA Backup Path 563

Limitations 566

Example: SR-MPLS over GRE as TI-LFA Backup Path 567

Unlabeled IPv6 Traffic Protection 574

CHAPTER 17 **Configure Segment Routing Microloop Avoidance** 577

About Segment Routing Microloop Avoidance 577

Usage Guidelines and Limitations 579

Configure Segment Routing Microloop Avoidance for IS-IS 579

Configure Segment Routing Microloop Avoidance for OSPF 581

CHAPTER 18 **Configure Segment Routing Mapping Server** 583

Segment Routing Mapping Server 583

Usage Guidelines and Restrictions 584

Segment Routing and LDP Interoperability 585

Example: Segment Routing LDP Interoperability 585

Configuring Mapping Server 588

Enable Mapping Advertisement 590

Configure Mapping Advertisement for IS-IS 590

Configure Mapping Advertisement for OSPF 591

Enable Mapping Client 592

CHAPTER 19 **Using Segment Routing Traffic Matrix** 595

Segment Routing Traffic Matrix 595

Traffic Collector Process 595

Configuring Traffic Collector 596

Displaying Traffic Information 598

CHAPTER 20 **Using Segment Routing OAM** 601

MPLS Ping and Traceroute for BGP and IGP Prefix-SID 601

Examples: MPLS Ping, Traceroute, and Tree Trace for Prefix-SID 602

MPLS LSP Ping and Traceroute Nil FEC Target 604

Examples: LSP Ping and Traceroute for Nil_FEC Target 604

Segment Routing Ping and Traceroute 606

Segment Routing Ping 606

Segment Routing Traceroute 608

Segment Routing Treetrace Enhancements 611

Segment Routing Ping and Traceroute for Flexible Algorithm 614

Segment Routing Ping for Flexible Algorithm 614

Segment Routing Traceroute for Flexible Algorithm 615

Segment Routing Policy Nil-FEC Ping and Traceroute 615

Segment Routing over IPv6 OAM 617

Segment Routing Data Plane Monitoring 618

Configure SR DPM 621

# Preface

From Release 6.1.2 onwards, Cisco introduces support for the 64-bit Linux-based IOS XR operating system. Extensive feature parity is maintained between the 32-bit and 64-bit environments. Unless explicitly marked otherwise, the contents of this document are applicable for both the environments. For more details on Cisco IOS XR 64 bit, refer to the Release Notes for Cisco ASR 9000 Series Routers, Release 6.1.2 document.

The *Segment Routing Configuration Guide for Cisco ASR 9000 Series Aggregation Services Routers* preface contains these sections:


- Changes to This Document, on page xiii
- Communications, Services, and Additional Information, on page xiii


## Changes to This Document

This table lists the changes made to this document since it was first printed.

| Date | Change Summary |
|---|---|
| November 2022 | Initial release of this document |

## Communications, Services, and Additional Information

- To receive timely, relevant information from Cisco, sign up at Cisco Profile Manager.
- To get the business impact you're looking for with the technologies that matter, visit Cisco Services.
- To submit a service request, visit Cisco Support.
- To discover and browse secure, validated enterprise-class apps, products, solutions and services, visit Cisco Marketplace.
- To obtain general networking, training, and certification titles, visit Cisco Press.
- To find warranty information for a specific product or product family, access Cisco Warranty Finder.

### Cisco Bug Search Tool

Cisco Bug Search Tool (BST) is a web-based tool that acts as a gateway to the Cisco bug tracking system that maintains a comprehensive list of defects and vulnerabilities in Cisco products and software. BST provides you with detailed defect information about your products and software.

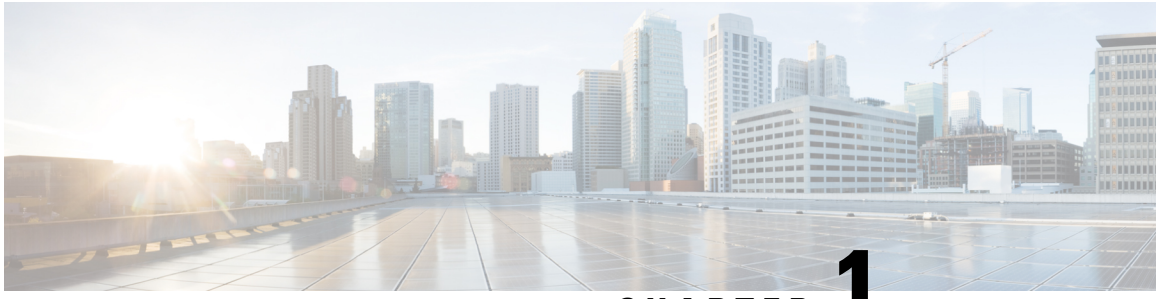

CHAPTER 1

# New and Changed Information for Segment Routing Features

This table summarizes the new and changed feature information for the *Segment Routing Configuration Guide for Cisco ASR 9000 Aggregation Services Routers* , and lists where they are documented.


- New and Changed Segment Routing Features, on page 1


## New and Changed Segment Routing Features

**Segment Routing Features Added or Modified in IOS XR Release 7.8.x**

| Feature | Description | Introduced/Changed in Release | Where Documented |
|---|---|---|---|
| Circuit-Style SR-TE Policies | This feature is introduced | Release 7.8.1 | Circuit-Style SR-TE Policies, on page 389 |
| SRv6 Traffic Engineering | This feature is introduced | Release 7.8.1 | Configure SRv6 Traffic Engineering, on page 171 |
| Explicit End.DT46 SRv6 SIDs | This feature is introduced | Release 7.8.1 | Configuring Explicit End.DT46 SRv6 SIDs, on page 41 |
| SRv6 — Static Adjacency SIDs | This feature is introduced | Release 7.8.1 | Configuring Static Adjacency SIDs, on page 39 |
| SRv6 Locator Metric and Tag | This feature is introduced | Release 7.8.1 | Configuring SRv6 Locator Metric and Tag, on page 32 |
| Wide LIB uSID Allocation for End.DT46 SRv6 SIDs | This feature is introduced | Release 7.8.1 | SRv6 uSID Allocation Within a uSID Block, on page 16 |

| Feature | Description | Introduced/Changed in Release | Where Documented |
|---|---|---|---|
| IS-IS Enhancements: max-metric and data plane updates | This feature is introduced | Release 7.8.1 | Configuring Flexible Algorithm |
| EVPN VPWS and EVPN ELAN ODN over SRv6-TE Policy | This feature is introduced | Release 7.8.1 | Support for EVPN VPWS and EVPN ELAN ODN over SRv6-TE Policy |
| Path Tracing Midpoint Node | This feature is introduced | Release 7.8.1 | Path Tracing in SRv6 Network, on page 548 |
| High Availability Support for Dynamic Tree-SID (Multicast VPN) | This feature is introduced | Release 7.8.1 | High Availability Support for Dynamic Tree-SID (Multicast VPN) |

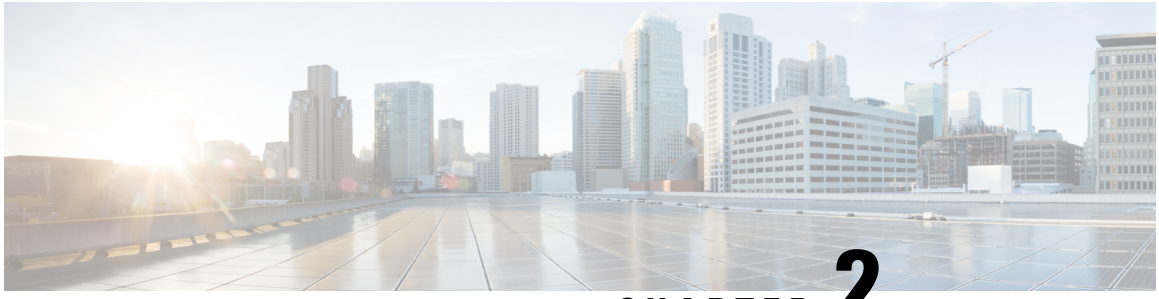

CHAPTER 2

# YANG Data Models for Segment Routing Features

This chapter provides information about the YANG data models for Segment Routing features.


- Using YANG Data Models, on page 3


## Using YANG Data Models

Cisco IOS XR supports a programmatic way of configuring and collecting operational data of a network device using YANG data models. Although configurations using CLIs are easier and human-readable, automating the configuration using model-driven programmability results in scalability.

The data models are available in the release image, and are also published in the Github repository. Navigate to the release folder of interest to view the list of supported data models and their definitions. Each data model defines a complete and cohesive model, or augments an existing data model with additional XPaths. To view a comprehensive list of the data models supported in a release, navigate to the **Available-Content.md** file in the repository.

You can also view the data model definitions using the YANG Data Models Navigator tool. This GUI-based and easy-to-use tool helps you explore the nuances of the data model and view the dependencies between various containers in the model. You can view the list of models supported across Cisco IOS XR releases and platforms, locate a specific model, view the containers and their respective lists, leaves, and leaf lists presented visually in a tree structure. This visual tree form helps you get insights into nodes that can help you automate your network.

To get started with using the data models, see the *Programmability Configuration Guide*.

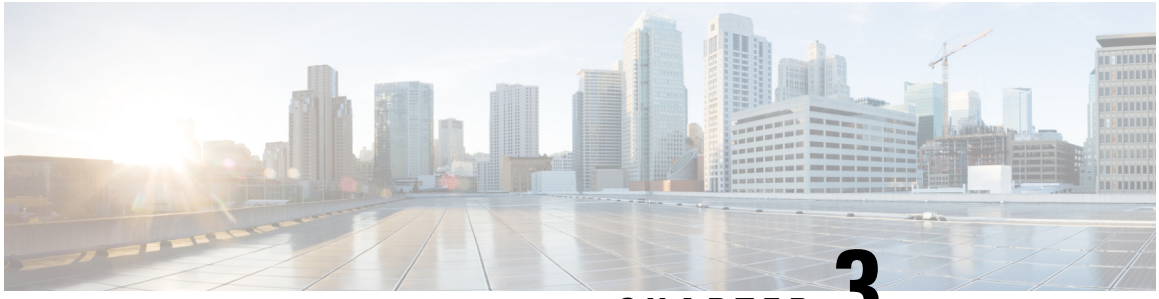

CHAPTER 3

# About Segment Routing

**Note** Segment Routing is not supported on 1st generation Cisco ASR 9000 Ethernet Line Cards or the Cisco ASR 9000 SIP-700 SPA Interface Processor. Refer to the Cisco ASR 9000 Ethernet Line Card Installation Guide for details about 1st generation line cards.

This chapter introduces the concept of segment routing and provides a workflow for configuring segment routing.


- Scope, on page 5
- Need, on page 6
- Benefits, on page 6
- Workflow for Deploying Segment Routing, on page 7


## Scope

Segment routing is a method of forwarding packets on the network based on the source routing paradigm. The source chooses a path and encodes it in the packet header as an ordered list of segments. Segments are an identifier for any type of instruction. For example, topology segments identify the next hop toward a destination. Each segment is identified by the segment ID (SID) consisting of a flat unsigned 20-bit integer.

### Segments

Interior gateway protocol (IGP) distributes two types of segments: prefix segments and adjacency segments. Each router (node) and each link (adjacency) has an associated segment identifier (SID).

- A prefix SID is associated with an IP prefix. The prefix SID is manually configured from the segment routing global block (SRGB) range of labels, and is distributed by IS-IS or OSPF. The prefix segment steers the traffic along the shortest path to its destination. A node SID is a special type of prefix SID that identifies a specific node. It is configured under the loopback interface with the loopback address of the node as the prefix.

  A prefix segment is a global segment, so a prefix SID is globally unique within the segment routing domain.

- An adjacency segment is identified by a label called an adjacency SID, which represents a specific adjacency, such as egress interface, to a neighboring router. An adjacency SID can be allocated dynamically from the dynamic label range or configured manually from the segment routing local block (SRLB) range

of labels. The adjacency SID is distributed by IS-IS or OSPF. The adjacency segment steers the traffic to a specific adjacency.

An adjacency segment is a local segment, so the adjacency SID is locally unique relative to a specific router.

By combining prefix (node) and adjacency segment IDs in an ordered list, any path within a network can be constructed. At each hop, the top segment is used to identify the next hop. Segments are stacked in order at the top of the packet header. When the top segment contains the identity of another node, the receiving node uses equal cost multipaths (ECMP) to move the packet to the next hop. When the identity is that of the receiving node, the node pops the top segment and performs the task required by the next segment.

### Dataplane

Segment routing can be directly applied to the Multiprotocol Label Switching (MPLS) architecture with no change in the forwarding plane. A segment is encoded as an MPLS label. An ordered list of segments is encoded as a stack of labels. The segment to process is on the top of the stack. The related label is popped from the stack, after the completion of a segment.

### Services

Segment Routing integrates with the rich multi-service capabilities of MPLS, including Layer 3 VPN (L3VPN), Virtual Private Wire Service (VPWS), Virtual Private LAN Service (VPLS), and Ethernet VPN (EVPN).

### Segment Routing for Traffic Engineering

Segment routing for traffic engineering (SR-TE) takes place through a policy between a source and destination pair. Segment routing for traffic engineering uses the concept of source routing, where the source calculates the path and encodes it in the packet header as a segment. Each segment is an end-to-end path from the source to the destination, and instructs the routers in the provider core network to follow the specified path instead of the shortest path calculated by the IGP. The destination is unaware of the presence of the policy.

# Need

With segment routing for traffic engineering (SR-TE), the network no longer needs to maintain a per-application and per-flow state. Instead, it simply obeys the forwarding instructions provided in the packet.

SR-TE utilizes network bandwidth more effectively than traditional MPLS-TE networks by using ECMP at every segment level. It uses a single intelligent source and relieves remaining routers from the task of calculating the required path through the network.

# Benefits

- **Ready for SDN**: Segment routing was built for SDN and is the foundation for Application Engineered Routing (AER). SR prepares networks for business models, where applications can direct network behavior. SR provides the right balance between distributed intelligence and centralized optimization and programming.
- **Minimal configuration**: Segment routing for TE requires minimal configuration on the source router.

- **Load balancing**: Unlike in RSVP-TE, load balancing for segment routing can take place in the presence of equal cost multiple paths (ECMPs).
- **Supports Fast Reroute (FRR)**: Fast reroute enables the activation of a pre-configured backup path within 50 milliseconds of path failure.
- **Plug-and-Play deployment**: Segment routing policies are interoperable with existing MPLS control and data planes and can be implemented in an existing deployment.

# Workflow for Deploying Segment Routing

Follow this workflow to deploy segment routing.

1. Configure the Segment Routing Global Block (SRGB)
2. Enable Segment Routing and Node SID for the IGP
3. Configure Segment Routing for BGP
4. Configure the SR-TE Policy
5. Configure TI-LFA and Microloop Avoidance
6. Configure the Segment Routing Mapping Server
7. Collect Traffic Statistics

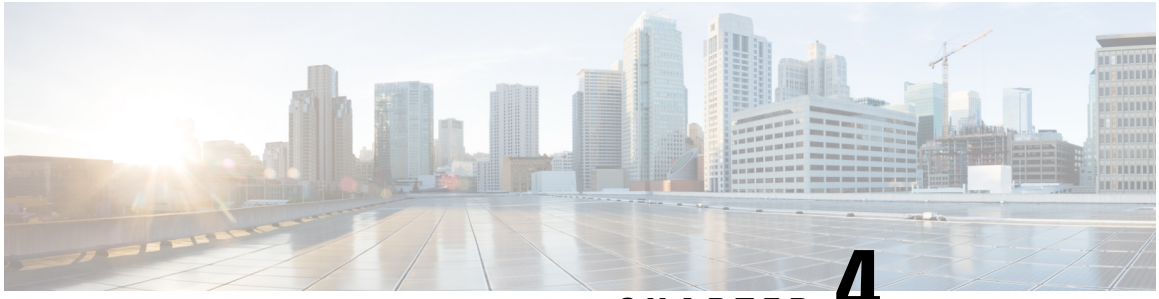

CHAPTER 4

# Configure Segment Routing over IPv6 (SRv6) with Micro-SIDs

**Note** IOS XR release 7.3.2 supports SRv6 with Full-length SID and Micro-SID formats; however, only one format is supported in the network at a time.

To use SRv6 Micro-SID (uSID), globally enable SRv6 and configure the 48-bit locator. See Configuring SRv6, on page 26.

To use SRv6 Full-length SID, see the Configure Segment Routing over IPv6 (SRv6) with Full-Length SIDs, on page 115.

Segment Routing for IPv6 (SRv6) is the implementation of Segment Routing over the IPv6 dataplane.


- Segment Routing over IPv6 Overview, on page 10
- SRv6 Micro-Segment (uSID), on page 14
- Usage Guidelines and Limitations, on page 25
- Configuring SRv6, on page 26
- Configuring SRv6 under IS-IS, on page 31
- Configuring SRv6 Flexible Algorithm under IS-IS, on page 33
- Configuring SRv6 Locator Prefix Summarization, on page 35
- Configuring TI-LFA with SRv6 IS-IS, on page 35
- Configuring SRv6 IS-IS Microloop Avoidance, on page 38
- Configuring Static SIDs, on page 39
- Configuring Explicit SRv6 uSID Allocation Start Range, on page 44
- Configuring SRv6 BGP-Based Services, on page 45
- SRv6/MPLS L3 Service Interworking Gateway, on page 96
- SRv6/MPLS Dual-Connected PE, on page 100
- SRv6 Provider Edge (PE) Lite Support, on page 102
- SRv6 SID Information in BGP-LS Reporting, on page 108
- DHCPv4 Relay Agent and Proxy Support over SRv6, on page 108
- DHCPv6 Relay Agent Support over SRv6, on page 109
- Full-Replace Migration to SRv6 Micro-SID, on page 109

# Segment Routing over IPv6 Overview

Segment Routing (SR) can be applied on both MPLS and IPv6 data planes. Segment Routing over IPv6 (SRv6) extends Segment Routing support with IPv6 data plane.

In an SR-MPLS enabled network, an MPLS label represents an instruction. The source nodes programs the path to a destination in the packet header as a stack of labels.

SRv6 introduces the Network Programming framework that enables a network operator or an application to specify a packet processing program by encoding a sequence of instructions in the IPv6 packet header. Each instruction is implemented on one or several nodes in the network and identified by an SRv6 Segment Identifier (SID) in the packet. The SRv6 Network Programming framework is defined in IETF RFC 8986 SRv6 Network Programming.

In SRv6, an IPv6 address represents an instruction. SRv6 uses a new type of IPv6 Routing Extension Header, called the Segment Routing Header (SRH), in order to encode an ordered list of instructions. The active segment is indicated by the destination address of the packet, and the next segment is indicated by a pointer in the SRH.

***Figure 1: Network Program in the Packet Header***

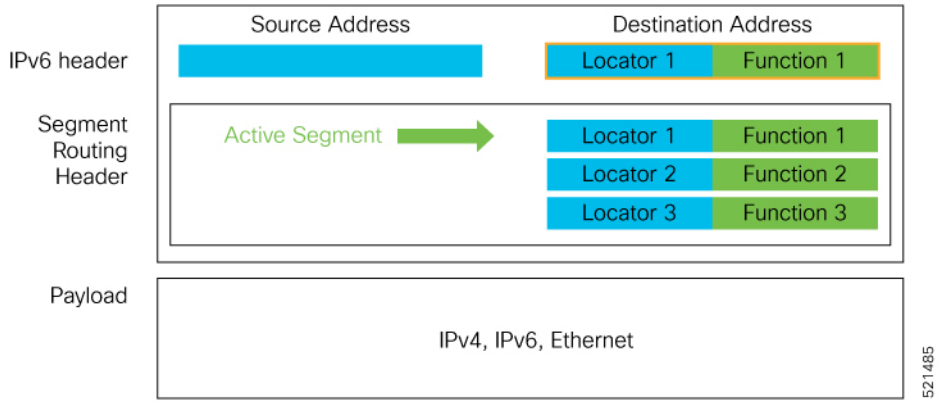


The SRv6 SRH is documented in IETF RFC IPv6 Segment Routing Header (SRH).

The SRH is defined as follows:

```
 0                   1                   2                   3
 0 1 2 3 4 5 6 7 8 9 0 1 2 3 4 5 6 7 8 9 0 1 2 3 4 5 6 7 8 9 0 1
+-+-+-+-+-+-+-+-+-+-+-+-+-+-+-+-+-+-+-+-+-+-+-+-+-+-+-+-+-+-+-+-+
| Next Header   |  Hdr Ext Len  | Routing Type  | Segments Left |
+-+-+-+-+-+-+-+-+-+-+-+-+-+-+-+-+-+-+-+-+-+-+-+-+-+-+-+-+-+-+-+-+
|  Last Entry   |     Flags     |              Tag              |
+-+-+-+-+-+-+-+-+-+-+-+-+-+-+-+-+-+-+-+-+-+-+-+-+-+-+-+-+-+-+-+-+
|                                                               |
|            Segment List[0] (128-bit IPv6 address)             |
|                                                               |
|                                                               |
+-+-+-+-+-+-+-+-+-+-+-+-+-+-+-+-+-+-+-+-+-+-+-+-+-+-+-+-+-+-+-+-+
|                                                               |
|                                                               |
                                ...
|                                                               |
```

```
|                                                               |
+-+-+-+-+-+-+-+-+-+-+-+-+-+-+-+-+-+-+-+-+-+-+-+-+-+-+-+-+-+-+-+-+
|                                                               |
|            Segment List[n] (128-bit IPv6 address)             |
|                                                               |
|                                                               |
+-+-+-+-+-+-+-+-+-+-+-+-+-+-+-+-+-+-+-+-+-+-+-+-+-+-+-+-+-+-+-+-+
//                                                             //
//         Optional Type Length Value objects (variable)       //
//                                                             //
+-+-+-+-+-+-+-+-+-+-+-+-+-+-+-+-+-+-+-+-+-+-+-+-+-+-+-+-+-+-+-+-+
```

The following list explains the fields in SRH:

- Next header—Identifies the type of header immediately following the SRH.
- Hdr Ext Len (header extension length)—The length of the SRH in 8-octet units, not including the first 8 octets.
- Segments left—Specifies the number of route segments remaining. That means, the number of explicitly listed intermediate nodes still to be visited before reaching the final destination.
- Last Entry—Contains the index (zero based) of the last element of the segment list.
- Flags— Contains 8 bits of flags.
- Tag—Tag a packet as part of a class or group of packets like packets sharing the same set of properties.
- Segment list—128-bit IPv6 addresses representing the *n*th segment in the segment list. The segment list encoding starts from the last segment of the SR policy (path). That means the first element of the segment list (Segment list [0]) contains the last segment of the SR policy, the second element contains the penultimate segment of the SR policy and so on.

In SRv6, a SID represents a 128-bit value, consisting of the following three parts:

- Locator: This is the first part of the SID with most significant bits and represents an address of a specific SRv6 node.
- Function: This is the portion of the SID that is local to the owner node and designates a specific SRv6 function (network instruction) that is executed locally on a particular node, specified by the locator bits.
- Args: This field is optional and represents optional arguments to the function.

The locator part can be further divided into two parts:

- SID Block: This field is the SRv6 network designator and is a fixed or known address space for an SRv6 domain. This is the most significant bit (MSB) portion of a locator subnet.
- Node Id: This field is the node designator in an SRv6 network and is the least significant bit (LSB) portion of a locator subnet.

### SRv6 Node Roles

Each node along the SRv6 packet path has a different functionality:

- Source node—A node that can generate an IPv6 packet with an SRH (an SRv6 packet), or an ingress node that can impose an SRH on an IPv6 packet.

- Transit node—A node along the path of the SRv6 packet (IPv6 packet and SRH). The transit node does not inspect the SRH. The destination address of the IPv6 packet does not correspond to the transit node.
- Endpoint node—A node in the SRv6 domain where the SRv6 segment is terminated. The destination address of the IPv6 packet with an SRH corresponds to the end point node. The segment endpoint node executes the function bound to the SID

### SRv6 Head-End Behaviors

The SR Headend with Encapsulation behaviors are documented in the IETF RFC 8986 SRv6 Network Programming.

The SR Headend with Insertion head-end behaviors are documented in the following IETF draft:

https://datatracker.ietf.org/doc/draft-filsfils-spring-srv6-net-pgm-insertion/

This section describes a set of SR Policy headend behaviors. The following list summarizes them:

- H.Encaps—SR Headend Behavior with Encapsulation in an SRv6 Policy
- H.Encaps.Red—H.Encaps with Reduced Encapsulation
- H.Insert—SR Headend with insertion of an SRv6 Policy
- H.Insert.Red—H.Insert with reduced insertion

### SRv6 Endpoint Behaviors

The SRv6 endpoint behaviors are documented in the IETF RFC 8986 SRv6 Network Programming.

The following is a subset of defined SRv6 endpoint behaviors that can be associated with a SID.

- End—Endpoint function. The SRv6 instantiation of a Prefix SID [RFC8402].
- End.X—Endpoint with Layer-3 cross-connect. The SRv6 instantiation of an Adj SID [RFC8402].
- End.DX6—Endpoint with decapsulation and IPv6 cross-connect (IPv6-L3VPN - equivalent to per-CE VPN label).
- End.DX4—Endpoint with decapsulation and IPv4 cross-connect (IPv4-L3VPN - equivalent to per-CE VPN label).
- End.DT6—Endpoint with decapsulation and IPv6 table lookup (IPv6-L3VPN - equivalent to per-VRF VPN label).
- End.DT4—Endpoint with decapsulation and IPv4 table lookup (IPv4-L3VPN - equivalent to per-VRF VPN label).
- End.DT46—Endpoint with decapsulation and specific IP table lookup (IP-L3VPN - equivalent to per-VRF VPN label).
- End.DX2—Endpoint with decapsulation and L2 cross-connect (L2VPN use-case).
- End.B6.Encaps—Endpoint bound to an SRv6 policy with encapsulation. SRv6 instantiation of a Binding SID.
- End.B6.Encaps.RED—End.B6.Encaps with reduced SRH. SRv6 instantiation of a Binding SID.

### SRv6 Endpoint Behavior Variants

Depending on how the SRH is handled, different behavior variants are defined for the End and End.X behaviors. The End and End.X behaviors can support these variants, either individually or in combinations.

- **Penultimate Segment Pop (PSP) of the SRH variant**—An SR Segment Endpoint Nodes receive the IPv6 packet with the Destination Address field of the IPv6 Header equal to its SID address.

  A penultimate SR Segment Endpoint Node is one that, as part of the SID processing, copies the last SID from the SRH into the IPv6 Destination Address and decrements the Segments Left value from one to zero.

  The PSP operation takes place only at a penultimate SR Segment Endpoint Node and does not happen at non-penultimate endpoint nodes. When a SID of PSP-flavor is processed at a non-penultimate SR Segment Endpoint Node, the PSP behavior is not performed since Segments Left would not be zero.

  The SR Segment Endpoint Nodes advertise the SIDs instantiated on them via control plane protocols. A PSP-flavored SID is used by the Source SR Node when it needs to instruct the penultimate SR Segment Endpoint Node listed in the SRH to remove the SRH from the IPv6 header.

- **Ultimate Segment Pop (USP) of the SRH variant**—The SRH processing of the End and End.X behaviors are modified as follows:

  If Segments Left is 0, then:

  1. Update the Next Header field in the preceding header to the Next Header value of the SRH
  2. Decrease the IPv6 header Payload Length by 8*(Hdr Ext Len+1)
  3. Remove the SRH from the IPv6 extension header chain
  4. Proceed to process the next header in the packet

  One of the applications of the USP flavor is when a packet with an SRH is destined to an application on hosts with smartNICs implementing SRv6. The USP flavor is used to remove the consumed SRH from the extension header chain before sending the packet to the host.

- **Ultimate Segment Decapsulation (USD) variant**—The Upper-layer header processing of the End and End.X behaviors are modified as follows:

  - **End** behavior: If the Upper-layer Header type is 41 (IPv6), then:

    1. Remove the outer IPv6 Header with all its extension headers
    2. Submit the packet to the egress IPv6 FIB lookup and transmission to the new destination
    3. Else, if the Upper-layer Header type is 4 (IPv4)
    4. Remove the outer IPv6 Header with all its extension headers
    5. Submit the packet to the egress IPv4 FIB lookup and transmission to the new destination
    6. Else, process as per Section 4.1.1 (Upper-Layer Header) of IETF RFC 8986 SRv6 Network Programming

  - **End.X** behavior: If the Upper-layer Header type is 41 (IPv6) or 4 (IPv4), then:

    1. Remove the outer IPv6 Header with all its extension headers
    2. Forward the exposed IP packet to the L3 adjacency J

3. Else, process as per Section 4.1.1 (Upper-Layer Header) of IETF RFC 8986 SRv6 Network Programming

One of the applications of the USD flavor is the case of TI-LFA in P routers with encapsulation with H.Encaps. The USD flavor allows the last Segment Endpoint Node in the repair path list to decapsulate the IPv6 header added at the TI-LFA Point of Local Repair and forward the inner packet.

# SRv6 Micro-Segment (uSID)

***Table 1: Feature History Table***

| Feature Name | Release Information | Feature Description |
|---|---|---|
| SRv6 Micro-Segment (uSID) | Release 7.3.1 | This feature is an extension of the SRv6 architecture. It leverages the existing SRv6 Network Programming architecture to encode up to six SRv6 Micro-SID (uSID) instructions within a single 128-bit SID address. Such a SID address is called a uSID Carrier.<br><br>In addition, this feature leverages the existing SRv6 data plane and control plane with no changes. It also provides low MTU overhead; for example, 6 uSIDs per uSID carrier results in 18 source-routing waypoints in only 40 bytes of overhead (in SRH). |

The SRv6 micro-segment (uSID) is an extension of the SRv6 architecture. It leverages the SRv6 Network Programming architecture to encode several SRv6 Micro-SID (uSID) instructions within a single 128-bit SID address. Such a SID address is called a uSID Carrier.

SRv6 uSID is documented in the IETF drafts Network Programming extension: SRv6 uSID instruction and Compressed SRv6 Segment List Encoding in SRH.

Throughout this chapter, we will refer to SRv6 micro-segment as “uSID”.

The SRv6 uSID provides the following benefits:

- Leverages the SRv6 Network Programming with no change. SRv6 uSID is a new pseudo code in the existing SRv6 network programming framework.
- Leverages the SRv6 data plane (SRH) with no change. Any SID in the destination address or SRH can be an SRv6 uSID carrier.
- Leverages the SRv6 control plane with no change.
- Ultra-Scale—Scalable number of globally unique nodes in the domain, for example:
  - 16-bit uSID ID size: 65k uSIDs per domain block
  - 32-bit uSID ID size: 4.3M uSIDs per domain block
- Lowest MTU overhead
  - 6 uSIDs per uSID carrier

    - For example, 18 source-routing waypoints in only 40 bytes of overhead

- Hardware-friendliness:
    - Leverages mature hardware capabilities (inline IP Destination Address edit, IP Destination Address longest match).
    - Avoids any extra lookup in indexed mapping tables.
    - A micro-program with 6 or fewer uSIDs requires only legacy IP-in-IP encapsulation behavior.
- Scalable Control Plane:
    - Summarization at area/domain boundary provides massive scaling advantage.
    - No routing extension is required, a simple prefix advertisement suffices.
- Seamless Deployment:
    - A uSID may be used as a SID (the carrier holds a single uSID).
    - The inner structure of an SR Policy can stay opaque to the source. A carrier with uSIDs is just seen as a SID by the policy headend Security.
    - Leverages SRv6's native SR domain security.

# SRv6 uSID Terminology

The SRv6 Network Programming is extended with the following terms:

- uSID—An identifier that specifies a micro-segment.

  A uSID has an associated behavior that is the SRv6 function (for example, a node SID or Adjacency SID) associated with the given ID. The node at which an uSID is instantiated is called the “Parent” node.
- uSID Carrier—A 128-bit IPv6 address (carried in either in the packet destination address or in the SRH) in the following format:

  ```
  <uSID-Block><Active-uSID><Next-uSID>...<Last-uSID><End-of-Carrier>...<End-of-Carrier>
  ```

  where:
    - uSID Block—An IPv6 prefix that defines a block of SRv6 uSIDs.
    - Active uSID—The first uSID that follows the uSID block.
    - Next uSID—The next uSID after the Active uSID.
    - Last uSID—The last uSID in the carrier before the End-of-Carrier uSID.
    - End-of-Carrier —A globally reserved uSID that marks the end of a uSID carrier. The End-of-Carrier ID is **0000**. All empty uSID carrier positions must be filled with the End-of-Carrier ID; therefore, a uSID carrier can have more than one End-of-Carrier.

  The following is an example of an SRH with 3 Micro-SID carriers for a total of up to 18 micro-instructions:

  | |
  |---|
  | Micro-SID Carrier1: {uInstruction1, uInstruction2… uInstruction6} |

| |
|---|
| Micro-SID Carrier2: {uInstruction7, uInstruction8… uInstruction12} |
| Micro-SID Carrier3: {uInstruction13, uInstruction14… uInstruction18} |

# SRv6 uSID Carrier Format

The uSID carrier format specifies the type of uSID carrier supported in an SRv6 network. The format specification includes Block size and ID size.

- **uSID Block**

  The uSID block is an IPv6 prefix that defines a block of SRv6 uSIDs. This can be an IPv6 prefix allocated to the provider (for example, /22, /24, and so on.), or it can be any well-known IPv6 address block generally available for private use, such as the ULA space FC/8, as defined in IETF draft RFC4193.

  An SRv6 network may support more than a single uSID block.

  The length of block [prefix] is defined in bits. From a hardware-friendliness perspective, it is expected to use sizes on byte boundaries (16, 24, 32, and so on).

- **uSID ID**

  The length of uSID ID is defined in bits. From a hardware-friendliness perspective, it is expected to use sizes on byte boundaries (8, 16, 24, 32, and so on).

The uSID carrier format is specified using the notation "F*bbuu*" , where “*bb*” is size of block and “*uu*” is size of ID. For example, "F3216" is a format with a 32-bit uSID block and 16-bit uSID IDs.

**Note** F3216 is the default format, and the only format that is supported in IOS XR 7.3.1 release.

# SRv6 uSID Allocation Within a uSID Block

***Table 2: Feature History Table***

| Feature Name | Release | Description |
|---|---|---|
| Wide LIB uSID Allocation for End.DT46 SRv6 SIDs | Release 7.8.1 | This feature introduces support for Wide Local ID block (W-LIB).<br>W-LIB provides an extended set of IDs available for local uSID allocation that can be used when a PE with large-scale pseudowire termination requires more local uSIDs than provided from the LIB.<br>W-LIB uSID allocation is supported for End.DT46 SRv6 SIDs. |

### Key Concepts and Terminologies

The architecture for uSID specifies both globally scoped and locally scoped uSIDs.

- Global ID block (GIB): The set of IDs available for globally scoped uSID allocation.

  A globally scoped uSID is the type of uSID that provides reachability to a node. A globally scoped uSID typically identifies a shortest path to a node in the SR domain. An IP route (for example, /48) is advertised by the parent node to each of its globally scoped uSIDs, under the associated uSID block. The parent node executes a variant of the END behavior.

  The “nodal” uSID (uN) is an example of a globally scoped behavior defined in uSID architecture.

  A node can have multiple globally scoped uSIDs under the same uSID blocks (for example, one uSID per IGP flex-algorithm). Multiple nodes may share the same globally scoped uSID (Anycast).

- Local ID block (LIB): The set of IDs available for locally scoped uSID allocation.

  A locally scoped uSID is associated to a local behavior, and therefore *must* be preceded by a globally scoped uSID of the parent node when relying on routing to forward the packet.

  A locally scoped uSID identifies a local micro-instruction on the parent node; for example, it may identify a cross-connect to a direct neighbor over a specific interface or a VPN context. Locally scoped uSIDs are not routeable.

  For example, if N1 and N2 are two different physical nodes of the uSID domain and *L* is a locally scoped uSID value, then N1 and N2 may bind two different behaviors to *L*.

- Wide LIB (W-LIB): The extended set of IDs available for local uSID allocation.

  The extended set of IDs is useful when a PE with large-scale Pseudowire termination requires more local uSIDs than provided from the LIB.

### Example: uSID Allocation

The request to allocate locally scoped uSIDs comes from SRv6 clients (such as IS-IS or BGP). The request can be to allocate any available ID (dynamic allocation) or to allocate a specific ID (explicit allocation).

Consider the following example:

- uSID Locator Block length: 32 bits
- uSID Locator Block: FCBB:BB00::/32 (with B being a nibble value picked by operator)
- uSID length (Locator Node ID / Function ID): 16 bits
- uSID: FCBB:BB00:XYWZ::/48 (with XYWZ being variable nibbles)

A uSID FCBB:BB00:XYWZ::/48 is said to be allocated from its block (FCBB:BB00::/32).

A uSID is allocated from the GIB or LIB of block FCBB:BB00::/32 depending on the value of the "**X**" nibble:

- GIB: nibble **X** from hex(0) to hex(D)
- LIB: nibble **X** hex(E) or hex(F)

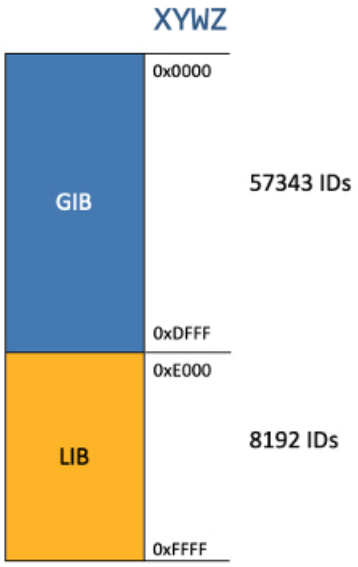


With this allocation scheme, the uSID Block **FCBB:BB00::/32** supports up to 57343 global uSIDs (routers) with each router supporting up to 8192 local uSIDs.

For example, the following picture depicts the global uSIDs allocated for 3 nodes within the SRv6 domain.

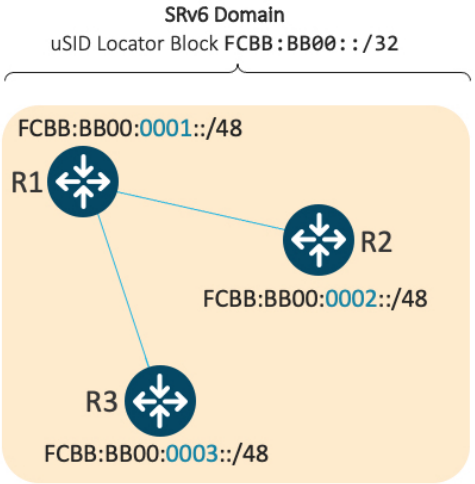


Looking further into R1, this node also has Local uSIDs associated with uA end-point behaviors:

- Function ID 0xE000 – cross-connect to L3 neighbor R2
- Function ID 0xE001 – cross-connect to L3 neighbor R3

The underlay uSIDs present on R1 are:

- FCBB:BB00:0001::/48
- FCBB:BB00:0001:E000::/64
- FCBB:BB00:0001:E001::/64

### GIB and LIB – IOS-XR Implementation

The following functionality is supported:

- GIB for user-assigned IDs of global segments (uNs)
- LIB for dynamically assigned IDs of local segments
  - uA end-point behavior
  - Service de-multiplexing end-point behaviors: End.DT, End.DX, End.DX2
- Explicit LIB for user-assigned IDs of local segments
  - Configurable explicit LIB range
  - Service de-multiplexing end-point behaviors: End.DT46
- Wide LIB (W-LIB)
  - Explicit W-LIB for user-assigned IDs of local segments
  - Configurable explicit W-LIB range
  - Service de-multiplexing end-point behaviors: End.DT46

The range of IDs supported by the Cisco IOS XR implementation are as follows:

- The range of IDs in the GIB is 0x000 to 0xDFFF.
- The range of IDs by default in the LIB is divided as follows:
  - Dynamic: 0xE000 to 0xFDFF
  - Explicit: 0xFE00 to 0xFEFF
  - Reserved: 0xFF00 to 0xFFEF and 0xFFF8 to 0xFFFF
- The range of IDs by default in the W-LIB is divided as follows:
  - Reserved: 0xFFF0 to 0xFFF6
  - Explicit: 0xFFF7

*Figure 2: GIB/LIB/W-LIB*

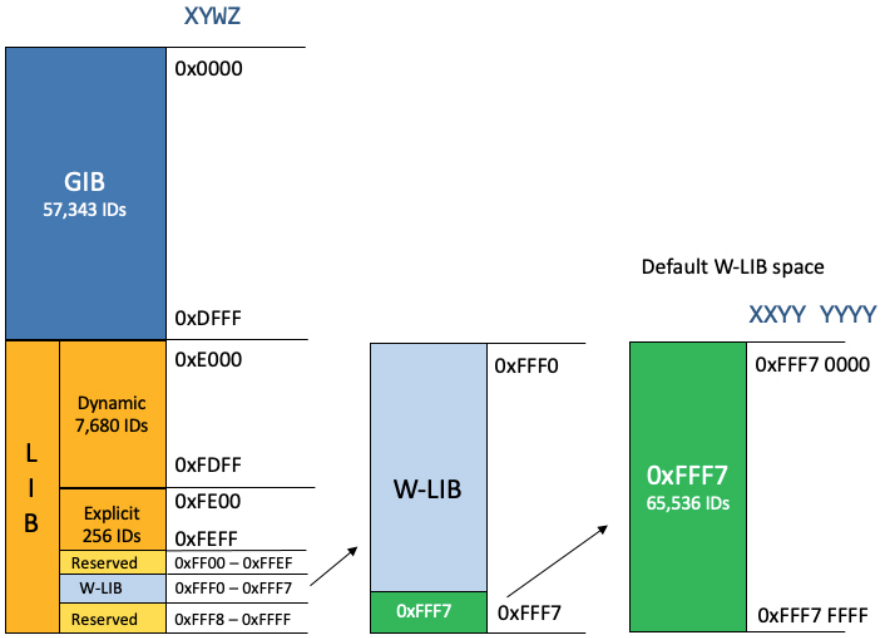


# SRv6 Endpoint Behaviors Associated with uSID

The SRv6 Network Programming is extended with new types of SRv6 SID endpoint behaviors:

- uN—A short notation for the NEXT-CSID (Compressed SID) End behavior with a pseudocode of shift-and-lookup, and PSP/USD flavors
- uA—A short notation for the NEXT-CSID End.X behavior with a pseudocode of shift-and-xconnect, and PSP/USD flavors
- uDT—A short notation for the NEXT-CSID End.DT behavior with the same pseudocode as End.DT4/End.DT6/End.DT46/End.DT2U/End.DT2M
- uDX—A short notation for the NEXT-CSID End.DX behavior with the same pseudocode as End.DX4/End.DX6/End.DX2

# SRv6 uSID in Action - Example

This example highlights an integrated VPN and Traffic Engineering use-case leveraging SRv6 uSID.

VPNv4 site A connected to Node 1 sends packets to VPNv4 site B connected to Node 2 alongside a traffic engineered path via Node 8 and Node 7 using a single 128-bit SRv6 SID.

Node 1 is the ingress PE; Node 2 is the egress PE.

Nodes 3, 4, 5, and 6 are classic IPv6 nodes. Traffic received on these nodes use classic IP forwarding without changing the outer DA.

Nodes 1, 8, 7 and 2 are SRv6 capable configured with:

- 32-bit SRv6 block = fcbb:bb01

- 16-bit SRv6 ID

  For example:

  - Node 7 uN = fcbb:bb01:0700::/48
  - Node 8 uN = fcbb:bb01:0800::/48

The following IGP routes are advertised:

- Node 8 advertises the IGP route fcbb:bb01:**0800**::/48
- Node 7 advertises the IGP route fcbb:bb01:**0700**::/48
- Node 2 advertises the IGP route fcbb:bb01:**0200**::/48

***Figure 3: Integrated VPN and Traffic Engineering SRv6 uSID Use-case***

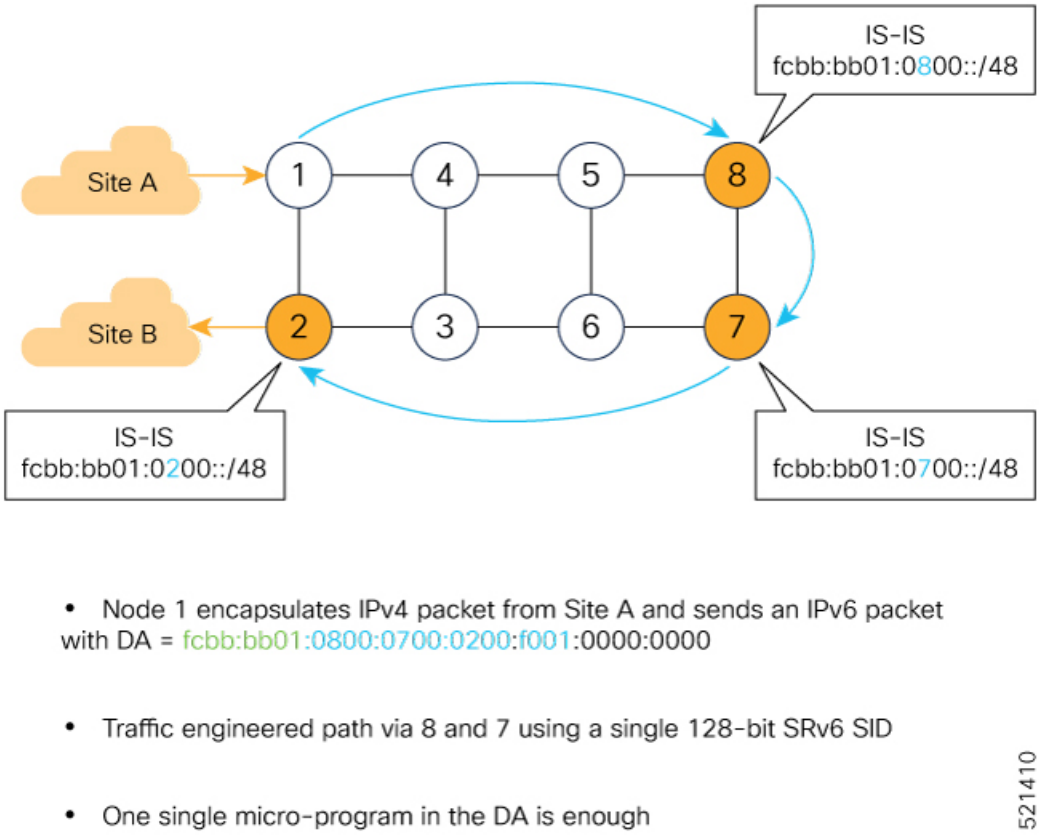


Node 1 encapsulates an IPv4 packet from VPN Site A and sends an IPv6 packet with destination address fcbb:bb01:**0800**:**0700**:**0200**:f001:0000:0000. This is a uSID carrier, with a list of micro-instructions (uSIDs) (0800, 0700, 0200, f001, and 0000 – indicating the end of the instruction).

uSIDs (uNs) 0800, 0700, 0200 are used to realize the traffic engineering path to Node 2 with way points at Nodes 8 and 7. uSID f001 is the BGP-signalled instruction (uDT4) advertized by Node 2 for the VPNv4 service

*Figure 4: Node 1: End.B6.Encaps Behavior*

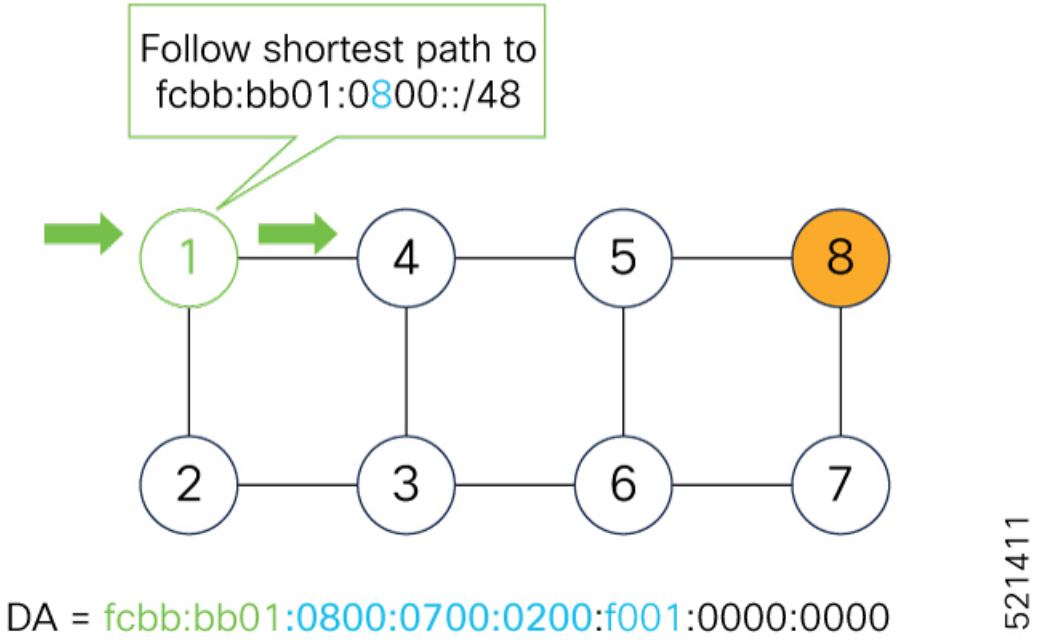


Nodes 4 and 5 simply forward the packet along the shortest path to Node 8, providing seamless deployment through classic IPv6 nodes.

*Figure 5: Node 4 and Node 5: Classic IPv6 Nodes*

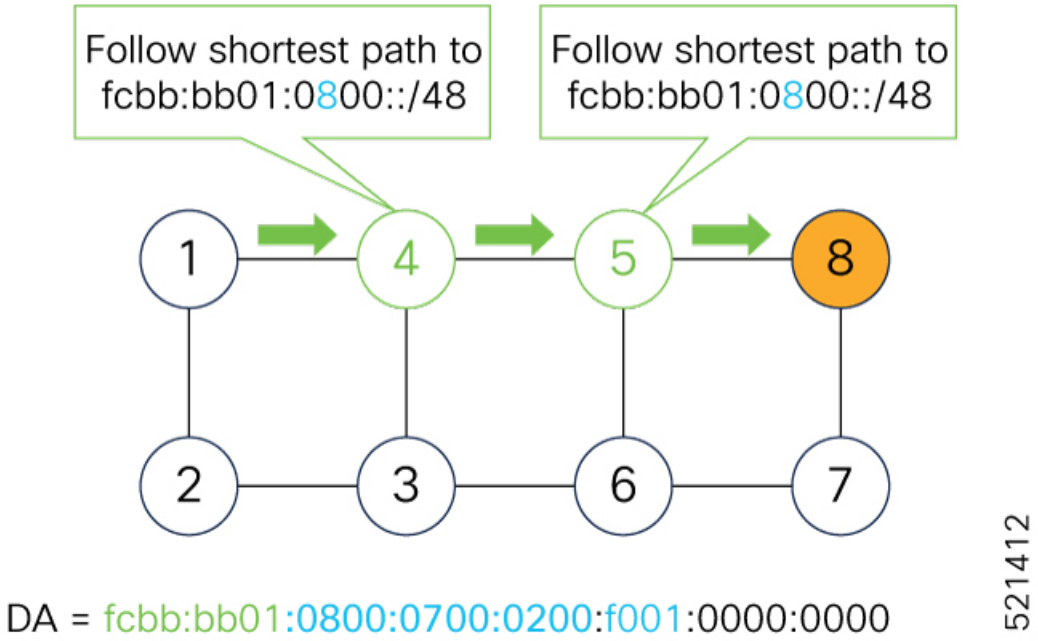


When Node 8 receives the packet, it performs SRv6 uN behavior (shift-and-lookup with PSP/USD). It removes its outer DA (0800) and advances the micro program to the next micro instruction by doing the following:

1. Pops its own uSID (0800)

2. **Shifts** the remaining DA by 16-bits to the left
3. Fills the remaining bits with 0000 (End-of-Carrier)
4. Performs a **lookup** for the shortest path to the next DA (fcbb:bb01:**0700::/48**)
5. Forwards it using the new DA fcbb:bb01:**0700**:0200:f001:0000:0000:0000

***Figure 6: Node 8: SRv6 uN Behavior (Shift and Forward)***

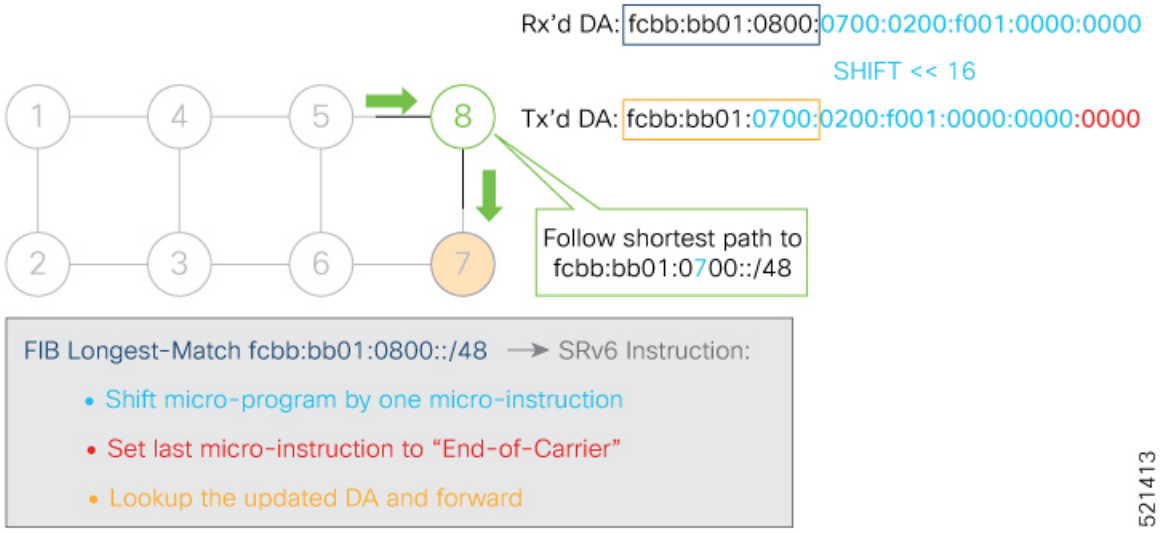


When Node 7 receives the packet, it performs the same SRv6 uN behavior (shift-and-lookup with PSP/USD), forwarding it using the new DA fcbb:bb01:**0200**:f001:0000:0000:0000:0000

***Figure 7: Node 7: SRv6 uN Behavior (Shift and Forward)***

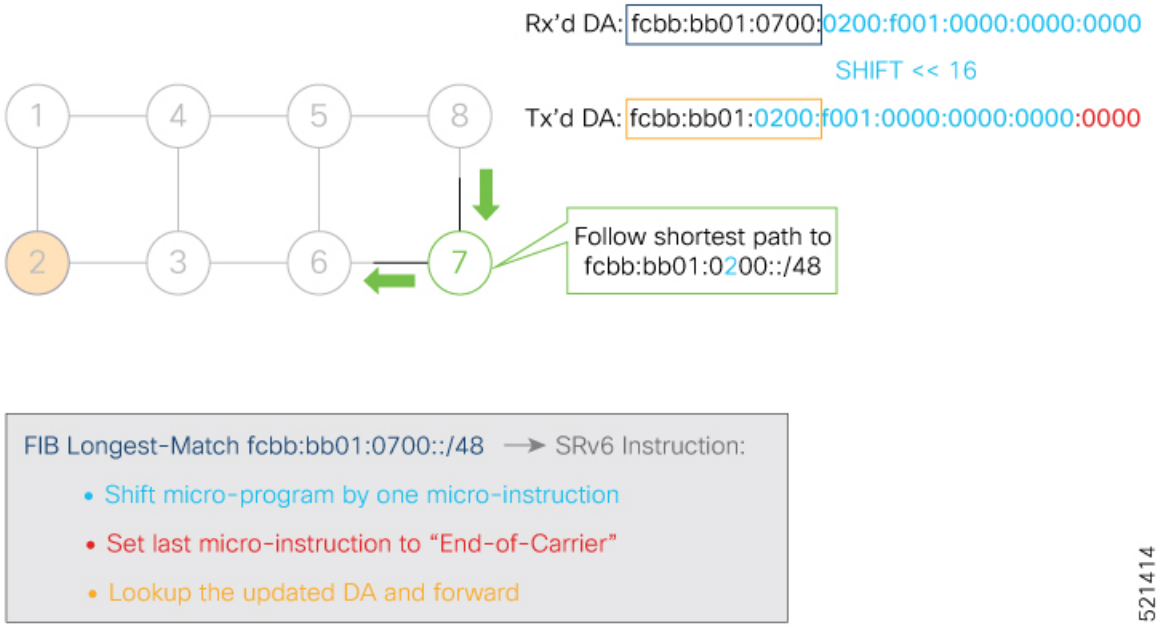

Nodes 6 and 3 simply forward the packet along the shortest path to Node 2, providing seamless deployment through classic IPv6 nodes.

***Figure 8: Node 6 and Node 3: Classic IPv6 Nodes***

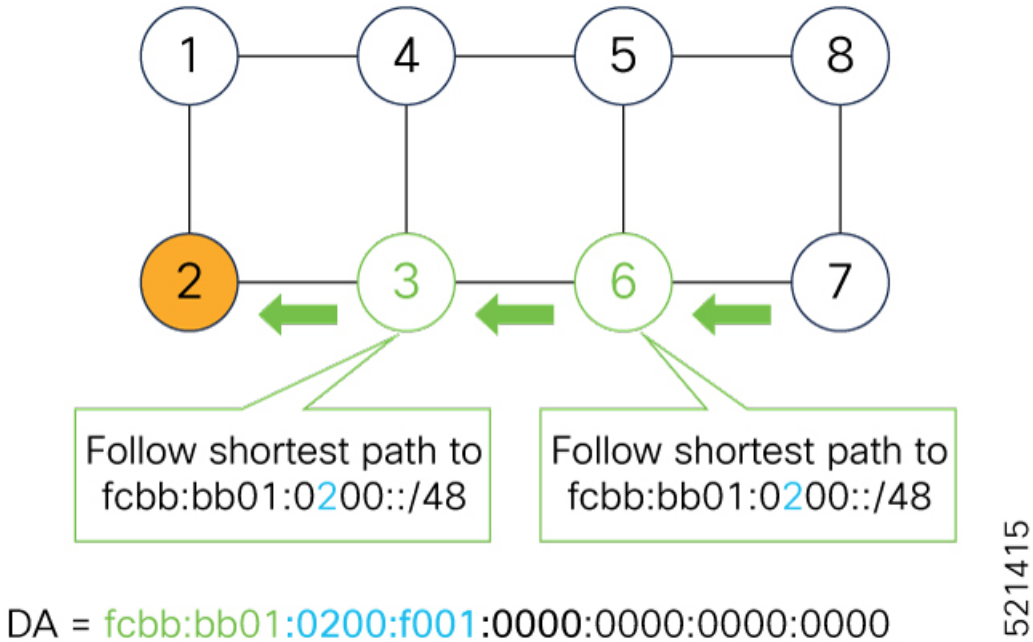


When Node 2 receives the packet, it performs an SRv6 uDT4 behavior (End.DT4—Endpoint with decapsulation and IPv4 table lookup) to VPNv4 Site B.

***Figure 9: Node 2: SRv6 uDT4 Behavior***

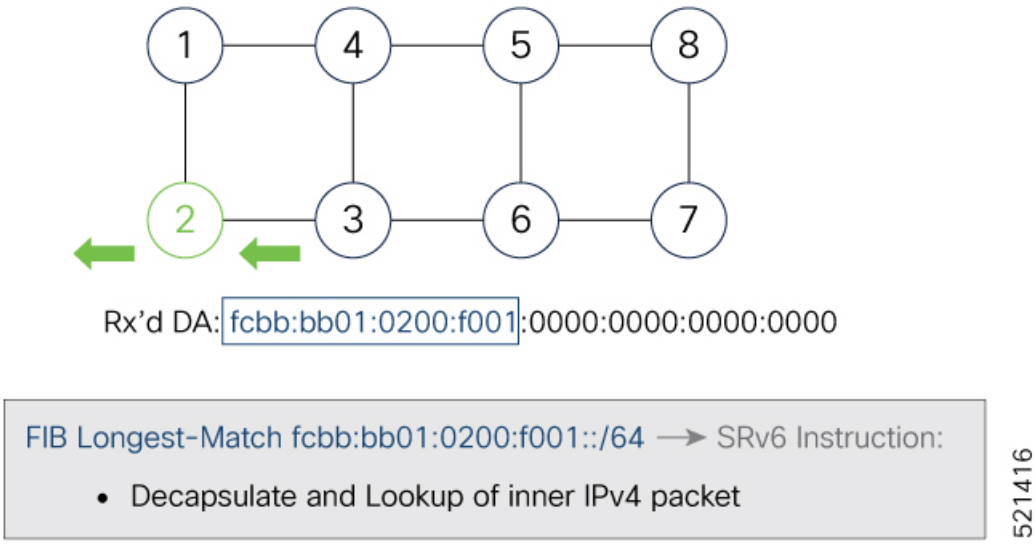


To recap, this example showed an integrated VPN and Traffic Engineering use-case, where VPNv4 site A connected to Node 1 sent packets to VPNv4 site B connected to Node 2 alongside a traffic engineered path via Node 8 and Node 7 using a single 128-bit SRv6 SID:

- @1: inner packet P encapsulated with outer DA fcbb:bb01:**0800**:**0700**:**0200**:f001:0000:0000

- @4 & @5: classic IP forwarding, outer DA unchanged
- @8: SRv6 uN behavior: shift and lookup, outer DA becomes fcbb:bb01:**0700**:**0200**:f001:0000:0000:0000
- @7: SRv6 uN behavior: shift and lookup, outer DA becomes fcbb:bb01:**0200**:f001:0000:0000:0000:0000
- @6 & @3: classic IP forwarding, outer DA unchanged
- @2: SRv6 End.DT4: Decapsulate and IPv4 table lookup

# Usage Guidelines and Limitations

### General Guidelines and Limitations

- Cisco IOS XR supports uSIDs with 32-bit uSID block and 16-bit uSID IDs (3216).

  A single UCF format must be used for uSID locators in a SRv6 uSID domain.
- Cisco IOS XR supports up to 8 uSID locator prefixes.

  Multiple locator prefixes are used when configuring Anycast locators or SRv6 Flexible Algorithm instances, for example.
- Cisco IOS XR supports uSID locator prefixes from different uSID blocks.

  Up to 64 uSID blocks can be used across all uSID locators in the network.
- Cisco IOS XR Release 7.3.1 and later supports the following SRv6 uSID behaviors and variants:
  - uN with PSP/USD
  - uA with PSP/USD
  - uDT4
  - uDT6
  - uDT46
- SRv6 Underlay support includes:
  - IGP redistribution/leaking between levels
  - Prefix Summarization on ABR routers
  - IS-IS TI-LFA
  - Microloop Avoidance
  - Flex-algo
- SRv6 over GRE interface is not supported
- SRv6 over BVI interface is not supported

### uSID Allocation Recommendation

We recommend that the uSID block allocation is made from the IPv6 Unique Local Address (ULA) range.

**Note** Allocation from the public Global Unicast Addresses (GUA) range is also supported.

- Use ULA /24 base from FC00::/8 space
  - FC*BB*:*BB*/24, with *B* indicating a nibble value picked by operator
- 256 uSID blocks possible from this allocation
  - In this release, 64 uSID blocks are supported
  - FC*BB*:*BBVV*/32, with *VV* two variable nibbles. The supported values for *VV* in Cisco IOS XR Release 7.3.1 are 0x00 to 0x3F.

For example:

- ULA /24 base = FC00:01/24
- uSID block space = 64 uSID blocks (from FC00:01**00**/32 to FC00:01**3F**/32)

### Platform-Specific Guidelines and Limitations

This release supports SRv6 on the Cisco ASR 9000 series 3rd, 4th, and 5th generation line cards and the Cisco IOS XRv 9000.

This release supports SRv6 with ACL Chaining on Cisco ASR 9000 series 4th and 5th generation line cards.

**Note** SRv6 with ACL Chaining is supported for permit and deny ACL traffic options only.

On fourth and fifth generations of the Cisco ASR 9000 Series High-Density Ethernet line cards, enabling SRv6 and BGP Flowspec or local policy-based routing (PBR) is not supported.

This release supports the following SID Encap budget:

- P role:
  - Underlay H-Insert: 12 sids (2 carriers with 6 sids per carrier)
- PE role:
  - Underlay H-Insert: 12 sids (2 carriers with 6 sids per carrier)
  - Overlay H-Encaps: 3 sids (1 carrier with 3 sids per carrier)

# Configuring SRv6

Enabling SRv6 involves the following high-level configuration steps:

- Configure SRv6 locator(s)
- Enable SRv6 under IS-IS
- Enable SRv6 Services under BGP

### Configure SRv6 Locator Name, Prefix, and uSID-Related Parameters

This section shows how to globally enable SRv6 and configure locator.

- **segment-routing srv6 locators locator** *locator*—Globally enable SRv6 and configure the locator.
- **segment-routing srv6 locators locator** *locator* **prefix** *ipv6_prefix*/*length*—Configure the locator prefix value.
- **segment-routing srv6 locators locator** *locator* **micro-segment behavior unode psp-usd**—Specifies the locator as a micro-segment (uSID) locator as well as specifies that IGP underlay uSID (uN/uA) variant is PSP-USD for this locator.

### (Optional) Configure Algorithm Associated with Locator

- **segment-routing srv6 locators locator** *locator* **algorithm** *algo*—(Optional) Configure Algorithm associated with the locator. Valid values for *algo* are from 128 to 255.

  For additional information about SRv6 Flexible Algorithm, see Configuring SRv6 Flexible Algorithm under IS-IS, on page 33.

  For detailed information about Flexible Algorithm, see Enabling Segment Routing Flexible Algorithm, on page 449.

### (Optional) Configure Anycast Locator

***Table 3: Feature History Table***

| Feature Name | Release Information | Feature Description |
|---|---|---|
| SRv6 Anycast Locator | Release 7.3.1 | An SRv6 Anycast locator is a type of locator that identifies a set of nodes (END SIDs). SRv6 Anycast Locators and their associated END SIDs may be provisioned at multiple places in a topology. One use case is to advertise Anycast END SIDs at exit points from an SRv6 network. |

An SRv6 Anycast locator is a type of locator that identifies a set of nodes (uN SIDs). SRv6 Anycast Locators and their associated uN SIDs may be provisioned at multiple places in a topology.

The set of nodes (Anycast group) is configured to advertise a shared Anycast locator and uN SID. Anycast routing enables the steering of traffic toward multiple advertising nodes. Packets addressed to an Anycast address are forwarded to the topologically nearest nodes.

One use case is to advertise Anycast uN SIDs at exit points from an SRv6 network. Any of the nodes that advertise the common uN SID could be used to forward traffic out of the SRv6 portion of the network to the topologically nearest node.

The following behaviors apply to Anycast Locator:

- Unlike a normal locator, IS-IS does not program or advertise uA SIDs associated with an Anycast locator.
- uN SIDs allocated from Anycast locators will not be used in constructing TI-LFA backup paths or Microloop Avoidance primary paths. TI-LFA backup and Microloop Avoidance paths for an Anycast locator prefix may terminate on any node advertising that locator, which may be different from the node terminating the original primary path.
- SRv6 anycast locators may have non-zero algorithm (Flexible Algorithm) values.

Use the following commands to configure the Anycast locator and advertise Anycast prefixes associated with an interface.

- **segment-routing srv6 locators locator** *locator* **anycast**—Configure the Anycast locator
- **router isis** *instance-id* **interface Loopback** *instance* **prefix-attributes anycast level** *level*—Advertise the Anycast prefixes associated with an interface.

**Example 1:**

The following example shows how to globally enable SRv6 and configure a locator.

```
Router(config)# segment-routing srv6
Router(config-srv6)# locators
Router(config-srv6-locators)# locator myLoc1
Router(config-srv6-locator)# micro-segment behavior unode psp-usd
Router(config-srv6-locator)# prefix 2001:0:8::/48
```

**Example 2:**

The following example shows how to configure Flexible Algorithm associated with locator.

```
Router(config)# segment-routing srv6
Router(config-srv6)# locators
Router(config-srv6-locators)# locator myLocAlgo128
Router(config-srv6-locator)# algorithm 128
Router(config-srv6-locator)# micro-segment behavior unode psp-usd
Router(config-srv6-locator)# prefix 2001:0:88::/48
```

**Example 3:**

The following example shows how to configure Anycast locator.

```
Router(config)# segment-routing srv6
Router(config-srv6)# locators
Router(config-srv6-locators)# locator myLocAnycast
Router(config-srv6-locator)# anycast
Router(config-srv6-locator)# micro-segment behavior unode psp-usd
Router(config-srv6-locator)# prefix 2001:0:100::/48
```

The following example shows how to advertise the Anycast prefixes associated with an interface.

```
Router(config)# router isis core
Router(config-isis)# interface Loopback100
Router(config-isis-if)# prefix-attributes anycast level 1
```

### (Optional) Customize SRv6 Encapsulation Parameters

This section describes the configurable SRv6 encapsulation parameters. These optional parameters include:

- **segment-routing srv6 encapsulation source-address** *ipv6-addr*—Source Address of outer encapsulating IPv6 header. The default source address for encapsulation is one of the loopback addresses.
- **segment-routing srv6 encapsulation hop-limit** {*count* | **propagate**}—The hop limit of outer-encapsulating IPv6 header. The range for *count* is from 1 to 255; the default value for hop-limit is 255. Use **propagate** to set the hop-limit value by propagation (from incoming packet/frame).
- **segment-routing srv6 encapsulation evpn next-header** *protocol-number*—The protocol number to use in the Next-header field of the IPv6 or SRH header. The range for *protocol-number* is from 59 to 252.
- **segment-routing srv6 encapsulation traffic-class** {*value* | **propagate**}—The traffic-class field settings on the IPv6 header. Specify the *value* (as 2 hexadecimal nibbles) for traffic class; valid values are from 0x0 to 0xff. Use **propagate** to set the traffic-class value by propagation (from incoming packet/frame).

### (Optional) Customize SRv6 Logging for Locator Status Changes

- **segment-routing srv6 logging locator status**—Enable the logging of locator status.

### (Optional) Customize SRv6 SID Parameters

- **segment-routing srv6 sid holdtime** *minutes*—The holdtime for a stale or freed SID. The range of *minutes* is from 0 (disabled) to 60 minutes.

**Example 4:**

The following example shows how to configure optional SRv6 parameters:

```
RP/0/RSP0/CPU0:Node1(config)# segment-routing srv6 encapsulation
RP/0/RSP0/CPU0:Node1(config-srv6-encap)# source-address 1::1
RP/0/RSP0/CPU0:Node1(config-srv6-encap)# hop-limit 60
RP/0/RSP0/CPU0:Node1(config-srv6-encap)# traffic-class propagate
RP/0/RSP0/CPU0:Node1(config-srv6-encap)# evpn next-header 65
RP/0/RSP0/CPU0:Node1(config-srv6-encap)# exit
RP/0/RSP0/CPU0:Node1(config-srv6)# logging locator status
RP/0/RSP0/CPU0:Node1(config-srv6)# sid holdtime 10

RP/0/RSP0/CPU0:Node1(config-srv6)#
```

### Verifying SRv6 Manager

This example shows how to verify the overall SRv6 state from SRv6 Manager point of view. The output displays parameters in use, summary information, and platform specific capabilities.

```
Router# show segment-routing srv6 manager
Parameters:
  SRv6 Enabled: Yes
  SRv6 Operational Mode:
    Micro-segment:
      SID Base Block: 2001::/24
  Encapsulation:
    Source Address:
      Configured: ::
      Default: ::
```

```
    Hop-Limit: Default
    Traffic-class: Default
Summary:
  Number of Locators: 3 (3 operational)
  Number of SIDs: 3 (0 stale)
  Max SIDs: 64000
  OOR:
    Thresholds: Green 3200, Warning 1920
    Status: Resource Available
        History: (0 cleared, 0 warnings, 0 full)
    Block 2001::/32:
        Number of SIDs free: 7680
        Max SIDs: 7680
        Thresholds: Green 384, Warning 231
        Status: Resource Available
            History: (0 cleared, 0 warnings, 0 full)
Platform Capabilities:
  SRv6: Yes
  TILFA: Yes
  Microloop-Avoidance: Yes
  Endpoint behaviors:
    End (PSP)
    End.X (PSP)
    End.DX6
    End.DX4
    End.DT6
    End.DT4
    End.OP
    uN (PSP/USD)
    uA (PSP/USD)
    uDT6
    uDT4
    uDX2
    uB6 (Insert.Red)
  Headend behaviors:
    T
    H.Insert.Red
    H.Encaps.Red
  Security rules:
    SEC-1
    SEC-2
    SEC-3
  Counters:
    CNT-1
    CNT-3
  Signaled parameters:
    Max-SL          : 3
    Max-End-Pop-SRH : 3
    Max-H-Insert    : 3 sids
    Max-H-Encap     : 3 sids
    Max-End-D       : 4
  Configurable parameters (under srv6):
    Encapsulation:
      Source Address: Yes
      Hop-Limit     : value=Yes, propagate=No
      Traffic-class : value=Yes, propagate=Yes
  Max SIDs: 64000
  SID Holdtime: 3 mins
```

### Verifying SRv6 Locator

This example shows how to verify the locator configuration and its operational status.

```
Router# show segment-routing srv6 locator myLoc1 detail

Name                  ID       Algo  Prefix                    Status   Flags
--------------------  -------  ----  ------------------------  -------  --------
myLoc1                3        0     2001:0:8::/48             Up       U
  (U): Micro-segment (behavior: uN (PSP/USD))
  Interface:
    Name: srv6-myLoc1
    IFH : 0x02000120
    IPv6 address: 2001:0:8::/48
  Number of SIDs: 1
  Created: Dec 10 21:26:54.407 (02:52:26 ago)
```

### Verifying SRv6 SIDs

This example shows how to verify the allocation of SRv6 local SIDs off locator(s).

```
Router# show segment-routing srv6 locator myLoc1 sid
SID                         Behavior          Context                          Owner
          State  RW
--------------------------  ----------------  ------------------------------
------------------  -----  --
2001:0:8::                  uN (PSP/USD)      'default':1                      sidmgr
          InUse  Y
```

The following example shows how to display detail information regarding an allocated SRv6 local SID.

```
Router# show segment-routing srv6 locator myLoc1 sid 2001:0:8:: detail
SID                         Behavior          Context                          Owner
          State  RW
--------------------------  ----------------  ------------------------------
------------------  -----  --
2001:0:8::                  uN (PSP/USD)      'default':8                      sidmgr
          InUse  Y
  SID Function: 0x8
  SID context: { table-id=0xe0800000 ('default':IPv6/Unicast), opaque-id=8 }
  Locator: 'myLoc1'
  Allocation type: Dynamic
  Created: Dec 10 22:10:51.596 (02:10:05 ago)
```

Similarly, you can display SID information across locators by using the **show segment-routing srv6 sid** command.

# Configuring SRv6 under IS-IS

Intermediate System-to-Intermediate System (IS-IS) protocol already supports segment routing with MPLS dataplane (SR-MPLS). This feature enables extensions in IS-IS to support Segment Routing with IPv6 data plane (SRv6). The extensions include advertising the SRv6 capabilities of nodes and node and adjacency segments as SRv6 SIDs.

SRv6 IS-IS performs the following functionalities:

1. Interacts with SID Manager to learn local locator prefixes and announces the locator prefixes in the IGP domain.

2. Learns remote locator prefixes from other IS-IS neighbor routers and installs the learned remote locator IPv6 prefix in RIB or FIB.
3. Allocate or learn prefix SID and adjacency SIDs, create local SID entries, and advertise them in the IGP domain.

### Usage Guidelines and Restrictions

The following usage guidelines and restrictions apply for SRv6 IS-IS:

- An IS-IS address-family can support either SR-MPLS or SRv6, but both at the same time is not supported.

### Configuring SRv6 under IS-IS

To configure SRv6 IS-IS, use the following command:

- **router isis** *instance* **address-family ipv6 unicast segment-routing srv6 locator** *locator* [**level** {**1** | **2**}]—Enable SRv6 under the IS-IS IPv6 address-family and assign SRv6 locator(s) to it. Use the **level** {**1** | **2**} keywords to advertise the locator only in the specified IS-IS level.

The following example shows how to configure SRv6 under IS-IS.

```
Router(config)# router isis core
Router(config-isis)# address-family ipv6 unicast
Router(config-isis-af)# segment-routing srv6
Router(config-isis-srv6)# locator myLoc1 level 1
Router(config-isis-srv6-loc)# exit
```

For more information about configuring IS-IS, refer to the "Implementing IS-IS" chapter in the *Routing Configuration Guide for Cisco ASR 9000*.

# Configuring SRv6 Locator Metric and Tag

You can configure an SRv6 locator metric. Valid values are 0 (default) through 16777215.

You can configure an SRv6 locator tag. Valid values are 1 through 4294967295.

By default, the metric and tag are advertised for both levels. You can configure the specific level for these metrics.

### Example

```
Router(config)# router isis CORE
Router(config-isis)# address-family ipv6 unicast
Router(config-isis-af)# segment-routing srv6
Router(config-isis-srv6)# locator myLoc
Router(config-isis-srv6-loc)# metric 450 level 1
Router(config-isis-srv6-loc)# tag 350 level 1
```

### Running Configuration

```
router isis CORE
 address-family ipv6 unicast
  segment-routing srv6
   locator myLoc
    metric 450 level 1
```

```
    tag 350 level 1
   !
  !
 !
!
```

# Configuring SRv6 Flexible Algorithm under IS-IS

This feature introduces support for implementing Flexible Algorithm using IS-IS SRv6.

SRv6 Flexible Algorithm allows operators to customize IGP shortest path computation according to their own needs. An operator can assign custom SR prefix-SIDs to realize forwarding beyond link-cost-based SPF. As a result, Flexible Algorithm provides a traffic-engineered path automatically computed by the IGP to any destination reachable by the IGP.

For detailed information about Flexible Algorithm, see Enabling Segment Routing Flexible Algorithm, on page 449.

### Usage Guidelines and Restrictions

Observe the following usage guidelines and restrictions:

- You can configure up to 8 locators to support SRv6 Flexible Algorithm.
- The Flexible Algorithm locator prefix follows the same usage guidelines and restrictions of algo-0 locator prefixes. See Usage Guidelines and Limitations, on page 25.
- The Locator Algorithm value range is 128 to 255.

### Configuring SRv6 Flexible Algorithm under IS-IS

The following sections show you the steps to enable SRv6 Flexible Algorithm. The example highlights a delay-based Flexible Algorithm instance.

1. Configure SRv6 locators
2. Assign SRv6 locators under IS-IS
3. Configure Flexible Algorithm definition and associated metric (for example, delay)
4. Configure the delay probe under the interface. For more information on SR performance measurement, see Configure performance measurement.

The following section shows how to configure two SRv6 locators: one associated with Algo 0, and the other associated with Algo 128.

```
Router(config)# segment-routing srv6
Router(config-srv6)# locators
Router(config-srv6-locators)# locator myLocBestEffort // best-effort locator
Router(config-srv6-locator)# micro-segment behavior unode psp-usd
Router(config-srv6-locator)# prefix 2001:0:1::/48
Router(config-srv6-locator)# exit

Router(config-srv6-locators)# locator myLocLowLat // low-latency (flex algo 128) locator
Router(config-srv6-locator)# micro-segment behavior unode psp-usd
Router(config-srv6-locator)# prefix 2001:0:2::/48
```

```
Router(config-srv6-locator)# algorithm 128
Router(config-srv6-locator)# exit
Router(config-srv6)# exit
```

The following section shows how to assign multiple SRv6 locators under IS-IS.

```
Router(config)# router isis core
Router(config-isis)# address-family ipv6 unicast
Router(config-isis-af)# segment-routing srv6
Router(config-isis-srv6)# locator myLocBestEffort
Router(config-isis-srv6-loc)# exit
Router(config-isis-srv6)# locator myLocLowLat
Router(config-isis-srv6-loc)# exit
```

The following section shows how to configure the Flexible Algorithm definition.

```
Router(config)# router isis core
Router(config-isis)# flex-algo 128
Router(config-isis-flex-algo)# metric-type delay
Router(config-isis-flex-algo)# exit
Router(config-isis)# interface GigabitEthernet0/0/0/0
Router(config-isis-if)# address-family ipv6 unicast
```

The following section shows how to configure the delay probe under the interface.

```
Router(config)# performance-measurement
Router(config-perf-meas)# interface GigabitEthernet0/0/0/0
Router(config-pm-intf)# delay-measurement
Router(config-pm-intf-dm)# commit
```

### Verification

```
Router# show segment-routing srv6 locator

Name                  ID       Algo  Prefix                    Status   Flags
--------------------  -------  ----  ------------------------  -------  --------
myLoc1                3        0     2001:0:8::/48             Up       U
myLocBestEffort       5        0     2001:0:1::/48             Up       U
myLocLowLat           4        128   2001:0:2::/48             Up       U


Router# show isis flex-algo 128

IS-IS core Flex-Algo Database

Flex-Algo 128:

Level-2:
        Definition Priority: 128
        Definition Source: Router.00, (Local)
        Definition Equal to Local: Yes
        Disabled: No


Level-1:
        Definition Priority: 128
        Definition Source: Router.00, (Local)
        Definition Equal to Local: Yes
```

```
        Disabled: No

    Local Priority: 128
    FRR Disabled: No
    Microloop Avoidance Disabled: No
```

# Configuring SRv6 Locator Prefix Summarization

*Table 4: Feature History Table*

| Feature Name | Release Information | Feature Description |
|---|---|---|
| SRv6 IS-IS Prefix Summarization | Release 7.3.1 | SRv6 leverages longest-prefix-match IP forwarding. This feature enables summarizing of locators at ABRs and ASBRs, which achieves massive-scale reachability. |

SRv6 leverages longest-prefix-match IP forwarding. Massive-scale reachability can be achieved by summarizing locators at ABRs and ASBRs.

Use the **summary-prefix** *locator* [**algorithm** *algo*] [**explicit**] command in IS-IS address-family configuration mode to specify that only locators from the specified algorithm contribute to the summary. The **explicit** keyword limits the contributing prefixes to only those belonging to the same algorithm.

The following example shows how to configure SRv6 IS-IS Algorithm Summarization for regular algorithm and Flexible Algorithm (128).

```
Router(config)# router isis core
Router(config-isis)# address-family ipv6 unicast
Router(config-isis-af)# summary-prefix 2001:0:1::/48
Router(config-isis-af)# summary-prefix 2001:0:2::/48 algorithm 128 explicit
```

# Configuring TI-LFA with SRv6 IS-IS

This feature introduces support for implementing Topology-Independent Loop-Free Alternate (TI-LFA) using SRv6 IS-IS.

TI-LFA provides link protection in topologies where other fast reroute techniques cannot provide protection. The goal of TI-LFA is to reduce the packet loss that results while routers converge after a topology change due to a link failure. TI-LFA leverages the post-convergence path which is planned to carry the traffic and ensures link and node protection within 50 milliseconds. TI-LFA with IS-IS SR-MPLS is already supported.

TI-LFA provides link, node, and Shared Risk Link Groups (SRLG) protection in any topology.

For more information, see Configure Topology-Independent Loop-Free Alternate (TI-LFA), on page 553.

### Usage Guidelines and Limitations

The following usage guidelines and limitations apply:

- TI-LFA provides link protection by default. Additional tiebreaker configuration is required to enable node or SRLG protection.
- Usage guidelines for node and SRLG protection:
  - TI-LFA node protection functionality provides protection from node failures. The neighbor node is excluded during the post convergence backup path calculation.
  - Shared Risk Link Groups (SRLG) refer to situations in which links in a network share a common fiber (or a common physical attribute). These links have a shared risk: when one link fails, other links in the group might also fail. TI-LFA SRLG protection attempts to find the post-convergence backup path that excludes the SRLG of the protected link. All local links that share any SRLG with the protecting link are excluded.
  - When you enable link protection, you can also enable node protection, SRLG protection, or both, and specify a tiebreaker priority in case there are multiple LFAs.
  - Valid priority values are from 1 to 255. The lower the priority value, the higher the priority of the rule. Link protection always has a lower priority than node or SRLG protection.

### Configuring SRv6 IS-IS TI-LFA

The following example shows how to configure different types of TI-LFA protection for SRv6 IS-IS.

```
Router(config)# router isis core
Router(config-isis)# interface bundle-ether 1201
Router(config-isis-if)# address-family ipv6 unicast
Router(config-isis-if-af)# fast-reroute per-prefix
Router(config-isis-if-af)# fast-reroute per-prefix ti-lfa
Router(config-isis-if-af)# exit
Router(config-isis-if)# exit
Router(config-isis)# interface bundle-ether 1301
Router(config-isis-if)# address-family ipv6 unicast
Router(config-isis-if-af)# fast-reroute per-prefix
Router(config-isis-if-af)# fast-reroute per-prefix ti-lfa
Router(config-isis-if-af)# fast-reroute per-prefix tiebreaker node-protecting index 100
Router(config-isis-if-af)# fast-reroute per-prefix tiebreaker srlg-disjoint index 200
Router(config-isis-if-af)# exit
```

### Verification

This example shows how to verify the SRv6 IS-IS TI-LFA configuration using the **show isis ipv6 fast-reroute** *ipv6-prefix* **detail** command.

```
Router# show isis ipv6 fast-reroute cafe:0:2::2/128 detail

L2 cafe:0:2::2/128 [20/115] Label: None, medium priority
     via fe80::e00:ff:fe3a:c700, HundredGigE0/0/0/0, Node2, Weight: 0
       Backup path: TI-LFA (link), via fe80::1600:ff:feec:fe00, HundredGigE0/0/0/1 Node3,
Weight: 0, Metric: 40
         P node: Node4.00 [cafe:0:4::4], SRv6 SID: cafe:0:4:: uN (PSP/USD)
         Backup-src: Node2.00
       P: No, TM: 40, LC: No, NP: No, D: No, SRLG: Yes
```

```
     src Node2.00-00, cafe:0:2::2
```

This example shows how to verify the SRv6 IS-IS TI-LFA configuration using the **show route ipv6** *ipv6-prefix* **detail** command.

```
Router# show route ipv6 cafe:0:2::2/128 detail
Tue Feb 23 23:08:48.151 UTC

Routing entry for cafe:0:2::2/128
  Known via "isis 1", distance 115, metric 20, type level-2
  Installed Feb 23 22:57:38.900 for 00:11:09
  Routing Descriptor Blocks
    fe80::1600:ff:feec:fe00, from cafe:0:2::2, via HundredGigE0/0/0/1, Backup (TI-LFA)
      Repair Node(s): cafe:0:4::4
      Route metric is 40
      Label: None
      Tunnel ID: None
      Binding Label: None
      Extended communities count: 0
      Path id:65              Path ref count:1
      NHID:0x20002(Ref:19)
      SRv6 Headend: H.Insert.Red [f3216], SID-list {cafe:0:4::}
    fe80::e00:ff:fe3a:c700, from cafe:0:2::2, via HundredGigE0/0/0/0, Protected
      Route metric is 20
      Label: None
      Tunnel ID: None
      Binding Label: None
      Extended communities count: 0
      Path id:1       Path ref count:0
      NHID:0x20001(Ref:19)
      Backup path id:65
  Route version is 0x4 (4)
  No local label
  IP Precedence: Not Set
  QoS Group ID: Not Set
  Flow-tag: Not Set
  Fwd-class: Not Set
  Route Priority: RIB_PRIORITY_NON_RECURSIVE_MEDIUM (7) SVD Type RIB_SVD_TYPE_LOCAL
  Download Priority 1, Download Version 66
  No advertising protos.
```

This example shows how to verify the SRv6 IS-IS TI-LFA configuration using the **show cef ipv6** *ipv6-prefix* **detail location** *location* command.

```
Router# show cef ipv6 cafe:0:2::2/128 detail location 0/0/cpu0
Tue Feb 23 23:09:07.719 UTC
cafe:0:2::2/128, version 66, SRv6 Headend, internal 0x1000001 0x210 (ptr 0x8e96fd2c) [1],
0x0 (0x8e93fae0), 0x0 (0x8f7510a8)
 Updated Feb 23 22:57:38.904
 local adjacency to HundredGigE0/0/0/0

 Prefix Len 128, traffic index 0, precedence n/a, priority 1
  gateway array (0x8e7b5c78) reference count 1, flags 0x500000, source rib (7), 0 backups
                [2 type 3 flags 0x8401 (0x8e86ea40) ext 0x0 (0x0)]
  LW-LDI[type=3, refc=1, ptr=0x8e93fae0, sh-ldi=0x8e86ea40]
  gateway array update type-time 1 Feb 23 22:57:38.904
 LDI Update time Feb 23 22:57:38.913
 LW-LDI-TS Feb 23 22:57:38.913
   via fe80::1600:ff:feec:fe00/128, HundredGigE0/0/0/1, 9 dependencies, weight 0, class 0,
 backup (TI-LFA) [flags 0xb00]
    path-idx 0 NHID 0x20002 [0x8f5850b0 0x0]
    next hop fe80::1600:ff:feec:fe00/128, Repair Node(s): cafe:0:4::4
    local adjacency
```

```
    SRv6 H.Insert.Red SID-list {cafe:0:4::}
   via fe80::e00:ff:fe3a:c700/128, HundredGigE0/0/0/0, 6 dependencies, weight 0, class 0,
protected [flags 0x400]
    path-idx 1 bkup-idx 0 NHID 0x20001 [0x8f8420b0 0x0]
    next hop fe80::e00:ff:fe3a:c700/128

    Load distribution: 0 (refcount 2)

    Hash  OK  Interface                 Address
    0     Y   HundredGigE0/0/0/0        fe80::e00:ff:fe3a:c700
```

# Configuring SRv6 IS-IS Microloop Avoidance

*Table 5: Feature History Table*

| Feature Name | Release Information | Feature Description |
|---|---|---|
| SRv6 IS-IS Microloop Avoidance with Flexible Algorithm | Release 7.3.1 | The SRv6 Microloop Avoidance feature detects and addresses microloops that (might) occur after a topology change. |

This feature introduces support for implementing microloop avoidance using IS-IS SRv6.

Microloops are brief packet loops that occur in the network following a topology change (link down, link up, or metric change events). Microloops are caused by the non-simultaneous convergence of different nodes in the network. If nodes converge and send traffic to a neighbor node that has not converged yet, traffic may be looped between these two nodes, resulting in packet loss, jitter, and out-of-order packets.

The SRv6 Microloop Avoidance feature detects if microloops are possible following a topology change. If a node computes that a microloop could occur on the new topology, the node creates a loop-free SR-TE policy path to the destination using a list of segments. After the RIB update delay timer expires, the SR-TE policy is replaced with regular forwarding paths.

### Usage Guidelines and Limitations

The following usage guidelines and limitations apply:

- The Routing Information Base (RIB) update delay value specifies the amount of time the node uses the microloop avoidance policy before updating its forwarding table. The *delay-time* range is from 1 to 60000 milliseconds; the default value is 5000.

### Configuring SRv6 IS-IS Microloop Avoidance

The following example shows how to configure SRv6 IS-IS Microloop Avoidance and set the Routing Information Base (RIB) update delay value.

**Note** Complete the Configuring SRv6, on page 26 before performing these steps.

```
Router(config)# router isis test-igp
```

```
Router(config-isis)# address-family ipv6 unicast
Router(config-isis-af)# microloop avoidance segment-routing
Router(config-isis-af)# microloop avoidance rib-update-delay 2000
Router(config-isis-af)# commit
```

### Configuring SRv6 IS-IS Microloop Avoidance with Flexible Algorithm

Microloop Avoidance paths for particular Flexible Algorithm are computed using the same constraints as the calculation of the primary paths for such Flexible Algorithm. These paths use the Locator prefix advertised specifically for such Flexible Algorithm in order to enforce a microloop avoidance path.

By default, Microloop Avoidance for SRv6 Flexible Algorithm uses the Microloop Avoidance configuration of Algo 0.

Use the **microloop avoidance disable** command to disable the microloop calculation on a per-algorithm basis:

```
Router(config)# router isis test-tilfa
Router(config-isis)# flex-algo 128
Router(config-isis-flex-algo)# microloop avoidance disable
```

# Configuring Static SIDs

Manually allocated (static) SIDs are persistent over reloads and restarts, making them a reliable option to be used in explicit paths.

## Configuring Static Adjacency SIDs

An adjacency SID (Adj-SID) is associated with an adjacency to a neighboring node. The adjacency SID steers the traffic to a specific adjacency. Adjacency SIDs have local significance and are only valid on the node that allocates them.

Adjacency SIDs that are dynamically allocated do not require any special configuration, however there are some limitations:

- A dynamically allocated Adj-SID value is not known until it has been allocated, and a controller will not know the Adj-SID value until the information is flooded by the IGP.
- Dynamically allocated Adj-SIDs are not persistent and can be reallocated after a reload or a process restart.
- Each link is allocated a unique Adj-SID, so the same Adj-SID cannot be shared by multiple links.

Manually allocated (static) Adj-SIDs are persistent over reloads and restarts, making them a reliable option to be used in explicit paths. They can be provisioned for multiple adjacencies to the same neighbor or to different neighbors.

You can specify that the Adj-SID is protected. If the Adj-SID is protected on the primary interface and a backup path is available, a backup path is installed. By default, static Adj-SIDs are not protected.

### Usage Guidelines and Limitations

- Static Adj-SIDs are allocated from the explicit Local ID block (LIB). The default range for explicit SID allocation is 0xFE00 to 0xFEFF (256 IDs).

- You can increase the size of the explicit LIB range by modifying the start of the range of IDs available in the explicit LIB range. See Configuring Explicit SRv6 uSID Allocation Start Range, on page 44 for more information.

- Static Adj-SIDs are allocated independent of IS-IS. If a static Adj-SID is successfully allocated, then the SID Manager notifies IS-IS. IS-IS then claims the allocated static Adj-SID and installs the Adj-SID in RIB or FIB.
- If you remove the static Adj-SID configuration, the SID Manager does not clear the allocated static Adj-SID; IS-IS will continue to use the allocated static Adj-SID. This is expected behavior. If you configure a different static Adj-SID, SID manager resolves the conflict and installs the new Adj-SID and notifies IS-IS.
- Static Adj-SID allocation does not follow the interface manager (IM) interface state. The static Adj-SID will be allocated even if the interface is down or doesn't exist in the system. However, the static Adj-SID is not installed in forwarding, since IS-IS didn't claim this Adj-SID.
- Static Adj-SID follows the locator state. Static Adj-SID allocation will fail if the locator is down or invalid.
- Static Adj-SID can be allocated as a protected Adj-SID.
- Static Adj-SID can be allocated to a specific algorithm.

### Configuration

Use the **segment-routing srv6 static endpoint** command to configure static adjacency SID and SID allocation context.

Use the **sid** <*srv6-sid*> **behavior end-ua-psp-usd** command in srv6-static-endpoint config mode to configure the static Adj SID and endpoint behavior.

Use the **allocation-context nexthop** <*nhop-int*> [**algo-id** <*algo*> | **protected**] command in srv6-static-sid config mode to configure the next-hop interface. You can also configure the following options:

- **algo-id** *algo* — Specify a Flex Algo value for the static Adj-SID. Valid values for *algo* are 128 to 255; the default is 0 (SPF).
- **protected** — Specify if the static Adj-SID is protected

### Example

```
Router(config)# segment-routing
Router(config-sr)# srv6
Router(config-srv6)# static
Router(config-srv6-static)# endpoint
Router(config-srv6-static-endpoint)# sid fccc:0:200:fe01:: behavior end-ua-psp-usd
Router(config-srv6-static-sid)# allocation-context nexthop TenGigE0/1/0/30/1
Router(config-srv6-static-sid)# exit
Router(config-srv6-static-endpoint)# sid fccc:0:200:fe88:: behavior end-ua-psp-usd
Router(config-srv6-static-sid)# allocation-context nexthop TenGigE0/1/0/0/3 protected
Router(config-srv6-static-sid)# exit
Router(config-srv6-static-endpoint)# sid fccc:3a:200:fe01:: behavior end-ua-psp-usd
Router(config-srv6-static-sid)# allocation-context nexthop TenGigE0/1/0/0/3 algo-id 132
protected
```

```
Router(config-srv6-static-sid)#
```

### Running Configuration

```
segment-routing
 srv6
  static
   endpoint
    sid fccc:0:200:fe01:: behavior end-ua-psp-usd
     allocation-context nexthop TenGigE0/1/0/30/1
    !
    sid fccc:0:200:fe88:: behavior end-ua-psp-usd
     allocation-context nexthop TenGigE0/1/0/0/3 protected
    !
    sid fccc:3a:200:fe01:: behavior end-ua-psp-usd
     allocation-context nexthop TenGigE0/1/0/0/3 algo-id 132 protected
    !
```

# Configuring Explicit End.DT46 SRv6 SIDs

*Table 6: Feature History Table*

| Feature Name | Release | Description |
|---|---|---|
| Support for End.DT46 SRv6 Endpoint Behavior | Release 7.8.1 | This feature adds support for the “Endpoint with decapsulation and specific IP table lookup” SRv6 end-point behavior (End.DT46).<br>The End.DT46 behavior is used for dual-stack L3VPNs. This behavior is equivalent to the single per-VRF VPN label (for IPv4 and IPv6) in MPLS. |
| Support for Explicit End.DT46 SRv6 SIDs | Release 7.8.1 | This feature allows you to configure explicit SIDs associated with SRv6-based L3VPN/Internet BGP services. In previous releases, these SIDs were only allocated dynamically by BGP.<br>Explicit End.DT46 SRv6 SIDs are persistent over reloads and restarts. |

Explicit End.DT46 SRv6 SIDs are persistent over reloads and restarts.

Multiple explicit uDT46 IDs allocated from the LIB or W-LIB range can be created under the same SRv6 locator. Each ID is uniquely associated to a VRF.

**Note** See GIB and LIB – IOS-XR Implementation, on page 19 for information about the LIB and W-LIB

**Example: Explicit uDT46 (LIB)**

- Locator: fcbb:bb**00**:**11**::/48
- Explicit functions: fe0a (VRF-A), fe0b (VRF-B), fe0c (VRF-C)

- fcbb:bb00:**11**:fe0a::/64 — Explicit 16-bit DT46 function from LIB for VRF-A
- fcbb:bb00:**11**:fe0b::/64 — Explicit 16-bit DT46 function from LIB for VRF-B
- fcbb:bb00:**11**:fe0c::/64 — Explicit 16-bit DT46 function from LIB for VRF-C

**Example: Explicit uDT46 (W-LIB)**

- Locator: fcbb:bb**00**:**11**::/48
- Explicit functions: fff7:d (VRF-D), fff7:e (VRF-E), fff7:f (VRF-F)
  - fcbb:bb00:**11**:fff7:d::/80 — Explicit 32-bit DT46 function from W-LIB for VRF-D
  - fcbb:bb00:**11**:fff7:e::/80 — Explicit 32-bit DT46 function from W-LIB for VRF-E
  - fcbb:bb00:**11**:fff7:f::/80 — Explicit 32-bit DT46 function from W-LIB for VRF-F

An explicit uDT46 ID allocated from the LIB or W-LIB range can be associated to the same VRF under multiple SRv6 locators.

This association is useful when a look-up under a given VPN table is desired for a node with multiple locators (for example, unicast and Anycast locators).

The locators can be from the same ID block or different ID blocks:

- When the locators are from the same block, the manual uDT46 IDs for a given VRF must have the same value across locators.
- When the locators are from different blocks, the manual uDT46 IDs for a given VRF could be either the same value or different values.

We recommend using the same function ID across locators since it allows for simpler identification to the associated VRF table.

**Example 1**: Explicit uDT46 SIDs (LIB) with a common function ID under 2 locators of the same block-id

- Locator 1: fcbb:bb**00**:**10**::/48 (unicast locator)
- Locator 2: fcbb:bb**00**:**100**::/48 (Anycast locator)
- Explicit function: fe0a
- VRF lookup: VRF-A

```
fcbb:bb00:10:fe0a::/64 segment-routing srv6 endpoint behavior uDT46 vrf VRF-A
fcbb:bb00:100:fe0a::/64 segment-routing srv6 endpoint behavior uDT46 vrf VRF-A
```

**Example 2**: Explicit uDT46 SIDs (LIB) with a common function ID under 2 locators of different block-id

- Locator 1: fcbb:bb**00**:**11**::/48 (unicast locator – algo0)
- Locator 2: fcbb:bb**01**:**11**::/48 (unicast locator – algo128)
- Explicit function: fe0b
- VRF lookup: VRF-B

```
fcbb:bb00:11:fe0b::/64 segment-routing srv6 endpoint behavior uDT46 vrf VRF-B
fcbb:bb01:11:fe0b::/64 segment-routing srv6 endpoint behavior uDT46 vrf VRF-B
```

**Example 3**: Explicit uDT46 SIDs (W-LIB) with a common function ID under 2 locators of the same block-id

- Locator 1: fcbb:bb**00**:**10**::/48 (unicast locator)
- Locator 2: fcbb:bb**00**:**100**::/48 (Anycast locator)
- Explicit function: fff7:d
- VRF lookup: VRF-D

```
fcbb:bb00:11:fff7:d::/80 segment-routing srv6 endpoint behavior uDT46 vrf VRF-D
fcbb:bb00:100:fff7:d::/80 segment-routing srv6 endpoint behavior uDT46 vrf VRF-D
```

**Example 4**: Explicit uDT46 SIDs (W-LIB) with a common function ID under 2 locators of different block-id

- Locator 1: fcbb:bb**00**:**11**::/48 (unicast locator – algo0)
- Locator 2: fcbb:bb**01**:**11**::/48 (unicast locator – algo128)
- Explicit function: fff7:e
- VRF lookup: VRF-E

```
fcbb:bb00:11:fff7:e::/80 segment-routing srv6 endpoint behavior uDT46 vrf VRF-E
fcbb:bb01:11:fff7:e::/80 segment-routing srv6 endpoint behavior uDT46 vrf VRF-E
```

### Configuration

To configure explicit uDT46 IDs allocated from the LIB or W-LIB range, use the **router static address-family ipv6 unicast** *prefix/ mask* **segment-routing srv6 endpoint behavior uDT46 vrf** *vrf-name* command:

```
RP/0/RP0/CPU0:ios(config)# router static
RP/0/RP0/CPU0:ios(config-static)# address-family ipv6 unicast
RP/0/RP0/CPU0:ios(config-static-afi)# fcbb:bb00:10:fe0a::/64 segment-routing srv6 endpoint
 behavior uDT46 vrf VRF-A
RP/0/RP0/CPU0:ios(config-static-afi)# fcbb:bb00:100:fe0a::/64 segment-routing srv6 endpoint
 behavior uDT46 vrf VRF-A
RP/0/RP0/CPU0:ios(config-static-afi)# fcbb:bb00:11:fff7:d::/80 segment-routing srv6 endpoint
 behavior uDT46 vrf VRF-D
RP/0/RP0/CPU0:ios(config-static-afi)# fcbb:bb00:100:fff7:d::/80 segment-routing srv6 endpoint
 behavior uDT46 vrf VRF-D
```

### Running Config

```
router static
 address-family ipv6 unicast
  fcbb:bb00:10:fe0a::/64 segment-routing srv6 endpoint behavior uDT46 vrf VRF-A
  fcbb:bb00:100:fe0a::/64 segment-routing srv6 endpoint behavior uDT46 vrf VRF-A
  fcbb:bb00:11:fff7:d::/80 segment-routing srv6 endpoint behavior uDT46 vrf VRF-D
  fcbb:bb00:100:fff7:d::/80 segment-routing srv6 endpoint behavior uDT46 vrf VRF-D
```

# Configuring Explicit SRv6 uSID Allocation Start Range

You can increase the range of IDs available in the explicit LIB and explicit W-LIB by modifying their starting values.

See SRv6 uSID Allocation Within a uSID Block, on page 16 for information about the default range of IDs in the explicit LIB and W-LIB.

To modify the start value for the explicit LIB, use the following command:

- **segment-routing srv6 formats format usid-f3216 usid local-id-block explicit start** *lib-start-value*, where *lib-start-value* is from 0xE064 to 0xFEFF

**Note** When you increase the size of the explicit LIB range, you effectively decrease the number of available IDs in the dynamic LIB range. For example, if you configure the explicit LIB starting value to 0xE064, the dynamic LIB range is 0xE000 to 0xE063 (100 IDs).

To modify the start value for the explicit W-LIB, use the following command:

- **segment-routing srv6 formats format usid-f3216 usid wide-local-id-block explicit start** *wlib -start-value*, where *wlib-start-value* is from 0xFFF0 to 0xFFF7

### Example

Use the **show segment-routing srv6 manager** command to display the default start values of the explicit LIB and W-LIB:

```
RP/0/RP0/CPU0:ios# show segment-routing srv6 manager
Fri Sep  9 18:30:06.503 UTC
Parameters:
  SRv6 Enabled: No
  SRv6 Operational Mode: None
  Encapsulation:
    Source Address:
      Configured: ::
      Default: ::
    Hop-Limit: Default
    Traffic-class: Default
  SID Formats:
    f3216 <32B/16NFA> (2)
      uSID LIB Range:
        LIB Start   : 0xe000
        ELIB Start  : 0xfe00
      uSID WLIB Range:
        EWLIB Start : 0xfff7

. . .
```

The following example shows how to modify the start of the range for explicit LIB and W-LIB:

```
RP/0/RP0/CPU0:ios(config)# segment-routing
RP/0/RP0/CPU0:ios(config-sr)# srv6
RP/0/RP0/CPU0:ios(config-srv6)# formats
RP/0/RP0/CPU0:ios(config-srv6-fmts)# format usid-f3216
```

```
RP/0/RP0/CPU0:ios(config-srv6-fmt)# usid local-id-block explicit start 0xE064
RP/0/RP0/CPU0:ios(config-srv6-fmt)# usid wide-local-id-block explicit start 0xFFF0
```

### Running Config

```
segment-routing
 srv6
  formats
   format usid-f3216
    usid local-id-block explicit start 0xe064
    usid wide-local-id-block explicit start 0xfff0
   !
  !
 !
!
```

Use the **show segment-routing srv6 manager** command to display the configured starting values of the explicit LIB and W-LIB:

```
RP/0/RP0/CPU0:ios# show segment-routing srv6 manager
Fri Sep  9 18:31:06.033 UTC
Parameters:
  SRv6 Enabled: Yes
  SRv6 Operational Mode: None
  Encapsulation:
    Source Address:
      Configured: ::
      Default: ::
    Hop-Limit: Default
    Traffic-class: Default
  SID Formats:
    f3216 <32B/16NFA> (2)
      uSID LIB Range:
        LIB Start   : 0xe000
        ELIB Start  : 0xe064 (configured)
      uSID WLIB Range:
        EWLIB Start : 0xfff0 (configured)

. . .
```

# Configuring SRv6 BGP-Based Services

Building on the messages and procedures defined in IETF draft "BGP/MPLS IP Virtual Private Networks (VPNs)", BGP has been extended to provide services over an SRv6 network, such as:

- IPv4 Layer-3 VPNs
- IPv6 Layer-3 VPNs
- IPv4 BGP global
- IPv6 BGP global
- Layer-2 VPNs - Ethernet VPNs (EVPN)

For more information about BGP, refer to the "Implementing BGP" chapter in the *Routing Configuration Guide for Cisco ASR 9000 Series Routers* BGP Configuration Guide.

In SRv6-based services, the egress PE signals an SRv6 Service SID with the BGP service route. The ingress PE encapsulates the payload in an outer IPv6 header where the destination address is the SRv6 Service SID advertised by the egress PE. BGP messages between PEs carry SRv6 Service SIDs as a means to interconnect PEs and form VPNs. SRv6 Service SID refers to a segment identifier associated with one of the SRv6 service-specific behaviors advertised by the egress PE router, such as:

- uDT4 (Endpoint with decapsulation and IPv4 table lookup)
- uDT6 (Endpoint with decapsulation and IPv6 table lookup)
- uDX4 (Endpoint with decapsulation and IPv4 cross-connect)
- uDX6 (Endpoint with decapsulation and IPv6 cross-connect)

Based on the messages and procedures defined in IETF draft "SRv6 BGP based Overlay services", BGP encodes the SRv6 Service SID in the prefix-SID attribute of the corresponding BGP Network Layer Reachability Information (NLRI) and advertises it to its IPv6 BGP peers.

### Usage Guidelines and Restrictions

- The following SRv6 BGP-based services are supported:
  - SRv6 Services: IPv4 L3VPN
  - SRv6 Services: IPv6 L3VPN
  - SRv6 Services: IPv4 BGP Global
  - SRv6 Services: IPv6 BGP Global
- uDT4 and uDT6 for L3VPN and BGP global are supported.
- Dual-Stack L3 Services (IPv4 L3VPN, IPv6 L3VPN, IPv4 BGP global, IPv6 BGP global) are supported.

### SRv6 Locator Inheritance Rules

SRv6 locators can be assigned at different levels inside the BGP routing process. BGP allocates SRv6 Service SIDs from configured locator spaces according to the following inheritance rules:

1. Use the locator as defined under the service.

   If not defined under the specific service, then:

2. Use the locator as defined under the corresponding address-family.

   If not defined under the corresponding address-family, then:

3. Use the locator as defined globally under BGP.

### Enabling SRv6 Globally under BGP

Use the **router bgp** *as-number* **segment-routing srv6** command to enable SRv6 globally under the BGP routing process. The *as-number* is from 1-65535.

```
RP/0/0/CPU0:Node1(config)# router bgp 100 segment-routing srv6
```

### Assigning SRv6 Locator Globally under BGP

Use the **router bgp** *as-number* **segment-routing srv6 locator** *WORD* command to assign an SRv6 locator globally under the BGP routing process. The *as-number* is from 1-65535.

This example shows how to assign a locator:

```
RP/0/0/CPU0:Node1(config)# router bgp 100 segment-routing srv6 locator Node1-locator
```

For more information on how to configure an SRv6 locator, see Configuring SRv6, on page 26.

For more information on how to assign an SRv6 locator under the BGP service or BGP address-family, see the following SRv6 Services sections.

# SRv6 Services: IPv4 L3VPN

***Table 7: Feature History Table***

| Feature Name | Release | Description |
|---|---|---|
| Per-Prefix SRv6 Locator Assignment | Release 7.5.1 | This feature provides the ability to assign a specific SRv6 locator for a given prefix or a set of prefixes (IPv4/IPv6 GRT, IPv4/IPv6 VPN).<br>The egress PE advertises the prefix with the specified locator. This allows for per-prefix steering into desired transport behaviors, such as Flex Algo. |
| Support for iBGP as PE-CE protocol | Release 7.5.1 | This feature introduces support for iBGP as PE-CE protocol. |
| BGP Route Leaking | Release 7.5.1 | This feature adds support for importing routes from default-VRF to non-default VRF and routes from non-default VRF to default VRF. |

***Table 8: Feature History Table***

| Feature Name | Release | Description |
|---|---|---|
| Dual-Stack L3VPN Services (IPv4, IPv6) (SRv6 Micro-SID) | Release 7.3.2 | This feature introduces support for Dual-stack (VPNv4/VPNv6) VRFs.<br>VPNv4/VPNv6 Dual-stack supports both IPv4 (uDT4) and IPv6 (uDT6) based SRv6 L3VPN service on the same interface, sub-interface, or VRF. |

This feature provides IPv4 L3VPNs (VPNv4) over an SRv6 network.

### Usage Guidelines and Limitations

- SRv6 locator can be assigned globally, for all VRFs, for an individual VRF, or per-prefix.
- Per-VRF allocation mode is supported (uDT4 behavior)
- Dual-Stack L3VPN Services (IPv4, IPv6) are supported
- Equal-Cost Multi-path (ECMP) and Unequal Cost Multipath (UCMP) are supported.
- BGP (iBGP, eBGP), OSPF, Static are supported as PE-CE protocol.
- BGP route leaking between BGP Global and L3VPN is supported. Refer to the Implementing BGP chapter in the *Routing Configuration Guide for Cisco ASR 9000 Series Routers*.
- MPLS L3VPN and SRv6 L3VPN interworking gateway is supported.
- Per-CE allocation mode is not supported (uDX4 behavior)

### Configuring SRv6 based IPv4 L3VPN

To enable SRv6-based L3VPN, you need to enable SRv6 under BGP, specify the locator, and configure the SID allocation mode. The assignment of the locator can be done in different places under the **router bgp** configuration. See SRv6 Locator Inheritance Rules, on page 46.

#### Use Case 1: Assigning SRv6 Locator Globally

This example shows how to enable SRv6 and configure the SRv6 locator name under BGP Global:

```
Node1(config)# router bgp 100
Node1(config-bgp)# segment-routing srv6
Node1(config-bgp-gbl-srv6)# locator Node1-locator
Node1(config-bgp-gbl-srv6)# exit
Node1(config-bgp)# address-family vpnv4 unicast
Node1(config-bgp-af)# exit
Node1(config-bgp)# neighbor 3001::1:1:1:4
Node1(config-bgp-nbr)# remote-as 100
Node1(config-bgp-nbr)# address-family vpnv4 unicast
Node1(config-bgp-nbr-af)# exit
Node1(config-bgp-nbr)# exit
Node1(config-bgp)# vrf vrf_cust1
Node1(config-bgp-vrf)# rd 100:1
Node1(config-bgp-vrf)# address-family ipv4 unicast
Node1(config-bgp-vrf-af)# commit
```

#### Running Config

```
router bgp 100
 segment-routing srv6
  locator Node1-locator
 !
 address-family vpnv4 unicast
 !
 neighbor 3001::1:1:1:4
  remote-as 100
  address-family vpnv4 unicast
  !
 !
 vrf vrf_cust1
  rd 100:1
  address-family ipv4 unicast
```

```
  !
 !
!
end
```

### Use Case 2: Assigning SRv6 Locator for All VRFs

To configure the SRv6 locator for all VRFs under VPNv4 Address Family and specify the allocation mode, use the following commands:

- **router bgp** *as-number* **address-family vpnv4 unicast vrf all segment-routing srv6**: Enable SRv6
- **router bgp** *as-number* **address-family vpnv4 unicast vrf all segment-routing srv6 alloc mode** {**per-vrf**}: Specify the SID behavior (allocation mode)
  - Use the **per-vrf** keyword to specify that the same service SID (uDT4 behavior) be used for all the routes advertised from a unique VRF.
- **router bgp** *as-number* **address-family vpnv4 unicast vrf all segment-routing srv6 locator** *WORD*: Specify the locator

This example shows how to enable SRv6 and configure the SRv6 locator for all VRFs under VPNv4 Address Family, with per-VRF label allocation mode:

```
Node1(config)# router bgp 100
Node1(config-bgp)# address-family vpnv4 unicast
Node1(config-bgp-af)# vrf all
Node1(config-bgp-af-vrfall)# segment-routing srv6
Node1(config-bgp-af-vrfall-srv6)# locator Node1-locator
Node1(config-bgp-af-vrfall-srv6)# alloc mode per-vrf
Node1(config-bgp-af-vrfall-srv6)# exit
Node1(config-bgp-af-vrfall)# exit
Node1(config-bgp-af)# exit
Node1(config-bgp)# neighbor 3001::1:1:1:4
Node1(config-bgp-nbr)# remote-as 100
Node1(config-bgp-nbr)# address-family vpnv4 unicast
Node1(config-bgp-nbr-af)# exit
Node1(config-bgp-nbr)# exit
Node1(config-bgp)# vrf vrf_cust1
Node1(config-bgp-vrf)# rd 100:1
Node1(config-bgp-vrf)# address-family ipv4 unicast
Node1(config-bgp-vrf-af)# commit
```

### Running Config

```
router bgp 100
 address-family vpnv4 unicast
  vrf all
   segment-routing srv6
    locator Node1-locator
    alloc mode per-vrf
   !
  !
 !
 neighbor 3001::1:1:1:4
  remote-as 100
  address-family vpnv4 unicast
  !
 !
 vrf vrf_cust1
  rd 100:1
```

```
  address-family ipv4 unicast
  !
 !
!
end
```

### Use Case 3: Assigning SRv6 Locator for a specific VRF

To configure the SRv6 locator for a specific VRF under IPv4 Address Family and specify the allocation mode, use the following commands:

- **router bgp** *as-number* **vrf** *WORD* **address-family ipv4 unicast segment-routing srv6**: Enable SRv6
- **router bgp** *as-number* **vrf** *WORD* **address-family ipv4 unicast segment-routing srv6 alloc mode** { **per-vrf**}: Specify the SID behavior (allocation mode)
  - Use the **per-vrf** keyword to specify that the same service SID (uDT4 behavior) be used for all the routes advertised from a unique VRF.
- **router bgp** *as-number* **vrf** *WORD* **address-family ipv4 unicast segment-routing srv6 locator** *WORD*: Specify the locator

This example shows how to configure the SRv6 locator for an individual VRF, with per-VRF label allocation mode:

```
Node1(config)# router bgp 100
Node1(config-bgp)# address-family vpnv4 unicast
Node1(config-bgp-af)# exit
Node1(config-bgp)# neighbor 3001::1:1:1:4
Node1(config-bgp-nbr)# remote-as 100
Node1(config-bgp-nbr)# address-family vpnv4 unicast
Node1(config-bgp-nbr-af)# exit
Node1(config-bgp-nbr)# exit
Node1(config-bgp)# vrf vrf_cust1
Node1(config-bgp-vrf)# rd 100:1
Node1(config-bgp-vrf)# address-family ipv4 unicast
Node1(config-bgp-vrf-af)# segment-routing srv6
Node1(config-bgp-vrf-af-srv6)# locator Node1-locator
Node1(config-bgp-vrf-af-srv6)# alloc mode per-vrf
Node1(config-bgp-vrf-af-srv6)# commit
```

### Running Config

```
router bgp 100
 address-family vpnv4 unicast
 !
 neighbor 3001::1:1:1:4
  remote-as 100
  address-family vpnv4 unicast
  !
 !
 vrf vrf_cust1
  rd 100:1
  address-family ipv4 unicast
   segment-routing srv6
    locator Node1-locator
    alloc mode per-vrf
   !
  !
 !
```

```
!
end
```

### Use Case 4: Assigning SRv6 Locator for a Specific Prefix

This use case provides the ability to assign a specific SRv6 locator for a given prefix or a set of prefixes. The egress PE advertises the prefix with the specified locator. This allows for per-prefix steering into desired transport behaviors, such as Flex Algo.

To assign an SRv6 locator for a specific prefix, configure a route policy to specify the SID allocation mode based on match criteria. Examples of match criteria are destination-based match or community-based match.

- Supported SID allocation mode is per-VRF.
- For per-VRF allocation mode, you can also specify the SRv6 locator.
  - If an SRv6 locator is specified in the route policy, BGP will use that to allocate per-VRF SID. If the specified locator is invalid, the SID will not be allocated.
  - If an SRv6 locator is not specified in the route policy, the default locator configured under BGP is used to allocate the SID. If the default locator is not configured, then the SID will not be allocated.

For more information on configuring routing policies, refer to the "Implementing Routing Policy" chapter in the *Routing Configuration Guide for Cisco ASR 9000 Series Routers*.

The following example shows a route policy specifying the SID allocation mode with destination-based match:

```
Node1(config)# route-policy set_per_prefix_locator_rpl
Node1(config-rpl)# if destination in (10.1.1.0/24) then
Node1(config-rpl-if)# set srv6-alloc-mode per-vrf locator locator1
Node1(config-rpl-if)# elseif destination in (2.2.2.0/24) then
Node1(config-rpl-elseif)# set srv6-alloc-mode per-vrf locator locator2
Node1(config-rpl-elseif)# elseif destination in (3.3.3.0/24) then
Node1(config-rpl-elseif)# set srv6-alloc-mode per-vrf
Node1(config-rpl-elseif)# else
Node1(config-rpl-else)# drop
Node1(config-rpl-else)# endif
Node1(config-rpl)# end-policy
Node1(config)#
```

To specify per-prefix allocation mode for a specific VRF under IPv4 address family, use the following command:

- **router bgp** *as-number* **vrf** *WORD* **address-family ipv4 unicast segment-routing srv6 alloc mode route-policy** *policy_name*

This example shows how to configure per-prefix allocation mode for a specific VRF (vrf_cust1) under IPv4 address family

```
Node1(config)# router bgp 100
Node1(config-bgp)# vrf vrf_cust1
Node1(config-bgp-vrf)# address-family ipv4 unicast
Node1(config-bgp-vrf-af)# segment-routing srv6
Node1(config-bgp-vrf-af-srv6)# alloc mode route-policy set_per_prefix_locator_rpl
```

### Running Configuration

```
route-policy set_per_prefix_locator_rpl
  if destination in (10.1.1.0/24) then
    set srv6-alloc-mode per-vrf locator locator1
```

```
  elseif destination in (2.2.2.0/24) then
    set srv6-alloc-mode per-vrf locator locator2
  elseif destination in (3.3.3.0/24) then
    set srv6-alloc-mode per-vrf
  else
    drop
  endif
end-policy
!
router bgp 100
 vrf vrf_cust1
  address-family ipv6 unicast
   segment-routing srv6
    alloc mode route-policy set_per_prefix_locator_rpl
   !
  !
 !
!
```

Verify that the local and received SIDs have been correctly allocated under VPNv4 and specific VRF (vrf_cust1):

```
Node1# show bgp vpnv4 unicast local-sids
BGP router identifier 10.1.1.1, local AS number 100
BGP generic scan interval 60 secs
Non-stop routing is enabled
BGP table state: Active
Table ID: 0x0   RD version: 0
BGP main routing table version 50
BGP NSR Initial initsync version 18 (Reached)
BGP NSR/ISSU Sync-Group versions 0/0
BGP scan interval 60 secs

Status codes: s suppressed, d damped, h history, * valid, > best
              i - internal, r RIB-failure, S stale, N Nexthop-discard
Origin codes: i - IGP, e - EGP, ? - incomplete
   Network            Local Sid                                 Alloc mode   Locator
Route Distinguisher: 8:8
*>i8.8.8.8/32         NO SRv6 Sid                               -            -
* i                   NO SRv6 Sid                               -            -
Route Distinguisher: 10.1.1.1:0 (default for vrf vrf_cust1)
*> 10.1.1.0/24        fc00:0:1:40::                             per-vrf      locator1
*> 2.2.2.0/24         fc00:8:1:40::                             per-vrf      locator2
*> 3.3.3.0/24         fc00:9:1:40::                             per-vrf      locator4
*> 10.1.1.5/32        NO SRv6 Sid                               -            -
*> 3.3.3.3/32         NO SRv6 Sid                               -            -
*>i8.8.8.8/32         NO SRv6 Sid                               -            -


Node1# show bgp vpnv4 unicast received-sids
BGP router identifier 10.1.1.1, local AS number 100
BGP generic scan interval 60 secs
Non-stop routing is enabled
BGP table state: Active
Table ID: 0x0   RD version: 0
BGP main routing table version 50
BGP NSR Initial initsync version 18 (Reached)
BGP NSR/ISSU Sync-Group versions 0/0
BGP scan interval 60 secs

Status codes: s suppressed, d damped, h history, * valid, > best
              i - internal, r RIB-failure, S stale, N Nexthop-discard
Origin codes: i - IGP, e - EGP, ? - incomplete
   Network            Next Hop                            Received Sid
Route Distinguisher: 8:8
```

```
*>i8.8.8.8/32         10.1.1.2                           fc00:0:2:42::
* i                   2400:2020:42:2fff::1
                                                        fc00:0:2:42::
Route Distinguisher: 10.1.1.1:0 (default for vrf vrf_cust1)
*> 10.1.1.0/24        11.1.1.2                           NO SRv6 Sid
*> 2.2.2.0/24         11.1.1.2                           NO SRv6 Sid
*> 3.3.3.0/24         11.1.1.2                           NO SRv6 Sid
*> 10.1.1.5/32        11.1.1.2                           NO SRv6 Sid
*> 3.3.3.3/32         13.2.2.2                           NO SRv6 Sid
*>i8.8.8.8/32         10.1.1.2                           fc00:0:2:42::

Node1# show bgp vrf vrf_cust1 local-sids
BGP VRF vrf_cust1, state: Active
BGP Route Distinguisher: 10.1.1.1:0
VRF ID: 0x60000004
BGP router identifier 10.1.1.1, local AS number 1
Non-stop routing is enabled
BGP table state: Active
Table ID: 0xe0000013   RD version: 37
BGP main routing table version 37
BGP NSR Initial initsync version 18 (Reached)
BGP NSR/ISSU Sync-Group versions 0/0

Status codes: s suppressed, d damped, h history, * valid, > best
              i - internal, r RIB-failure, S stale, N Nexthop-discard
Origin codes: i - IGP, e - EGP, ? - incomplete
   Network            Local Sid                                Alloc mode   Locator
Route Distinguisher: 10.1.1.1:0 (default for vrf vrf_cust1)
*> 10.1.1.0/24        fc00:0:1:40::                            per-vrf      locator1
*> 2.2.2.0/24         fc00:8:1:40::                            per-vrf      locator2
*> 3.3.3.0/24         fc00:9:1:40::                            per-vrf      locator4
*> 10.1.1.5/32        NO SRv6 Sid                              -            -
*> 3.3.3.3/32         NO SRv6 Sid                              -            -
*>i8.8.8.8/32         NO SRv6 Sid                              -            -

Node1# show bgp vrf vrf_cust1 received-sids
BGP VRF vrf_cust1, state: Active
BGP Route Distinguisher: 10.1.1.1:0
VRF ID: 0x60000004
BGP router identifier 10.1.1.1, local AS number 1
Non-stop routing is enabled
BGP table state: Active
Table ID: 0xe0000013   RD version: 37
BGP main routing table version 37
BGP NSR Initial initsync version 18 (Reached)
BGP NSR/ISSU Sync-Group versions 0/0

Status codes: s suppressed, d damped, h history, * valid, > best
              i - internal, r RIB-failure, S stale, N Nexthop-discard
Origin codes: i - IGP, e - EGP, ? - incomplete
   Network            Next Hop                           Received Sid
Route Distinguisher: 10.1.1.1:0 (default for vrf vrf_cust1)
*> 10.1.1.0/24        11.1.1.2                           NO SRv6 Sid
*> 2.2.2.0/24         11.1.1.2                           NO SRv6 Sid
*> 3.3.3.0/24         11.1.1.2                           NO SRv6 Sid
*> 10.1.1.5/32        11.1.1.2                           NO SRv6 Sid
*> 3.3.3.3/32         13.2.2.2                           NO SRv6 Sid
*>i8.8.8.8/32         10.1.1.2                           fc00:0:2:42::
```

### Verification

The following figure shows a VPNv4 scenario. The sequence of commands included correspond to router Node1 acting as Ingress PE, and routers Node4 and Node5 acting as Egress PEs.

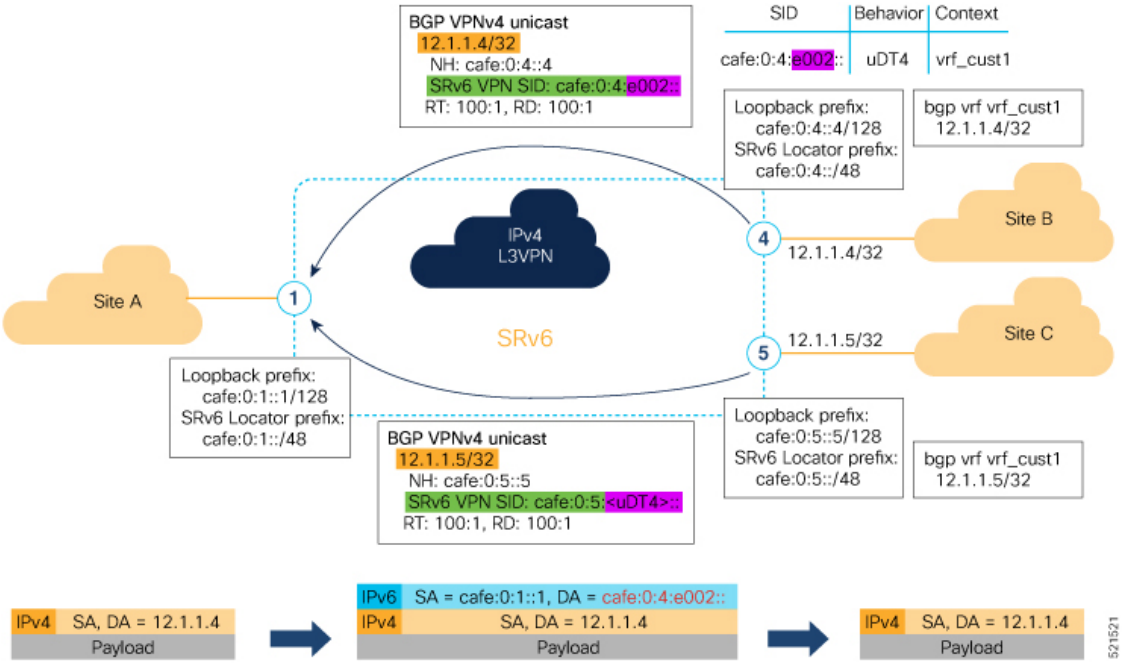


The following example shows how to verify the SRv6 based L3VPN configuration using the **`show segment-routing srv6 sid`** command.

In this example, we can observe the uDT4 SIDs associated with the IPv4 L3VPN; where uDT4 behavior represents Endpoint with decapsulation and IPv4 table lookup.

```
Node1# show segment-routing srv6 sid

*** Locator: 'Node1-locator' ***

SID                         Behavior          Context                          Owner
          State  RW
--------------------------  ----------------  ------------------------------
------------------  -----  --
cafe:0:1::                  uN (PSP/USD)      'default':1                      sidmgr
          InUse  Y
cafe:0:1:e000::             uA (PSP/USD)      [Hu0/0/0/0, Link-Local]:0        isis-1
          InUse  Y
cafe:0:1:e001::             uA (PSP/USD)      [Hu0/0/0/1, Link-Local]:0        isis-1
          InUse  Y
cafe:0:1:e002::             uDT4              'vrf_cust1'                      bgp-100
          InUse  Y
cafe:0:1:e003::             uDT4              'vrf_cust2'                      bgp-100
          InUse  Y
cafe:0:1:e004::             uDT4              'vrf_cust3'                      bgp-100
          InUse  Y
cafe:0:1:e005::             uDT4              'vrf_cust4'                      bgp-100
          InUse  Y
cafe:0:1:e006::             uDT4              'vrf_cust5'                      bgp-100
          InUse  Y
```

The following example shows how to verify the SRv6 based L3VPN configuration using the **show segment-routing srv6***SID-prefix***detail** command.

```
Node1# show segment-routing srv6 sid cafe:0:1:e002:: detail
Tue Feb  9 17:50:40.621 UTC

*** Locator: 'Node1-locator' ***

SID                         Behavior          Context                                 Owner
               State  RW
-------------------------  ----------------  ------------------------------
------------------  -----  --
cafe:0:1:e002::             uDT4              'vrf_cust1'                            bgp-100
             InUse  Y
  SID Function: 0xe002
  SID context: { table-id=0xe0000011 ('vrf_cust1':IPv4/Unicast) }
  Locator: 'Node1-locator'
  Allocation type: Dynamic
  Created: Feb  9 17:41:07.475 (00:09:33 ago)
```

The following example shows how to verify the SRv6 based L3VPN configuration using the **show bgp vpnv4 unicast** commands on Egress PE.

```
Node1# show bgp vpnv4 unicast summary

BGP router identifier 10.1.1.1, local AS number 100
BGP generic scan interval 60 secs
Non-stop routing is enabled
BGP table state: Active
Table ID: 0x0   RD version: 0
BGP main routing table version 36
BGP NSR Initial initsync version 16 (Reached)
BGP NSR/ISSU Sync-Group versions 0/0
BGP scan interval 60 secs

BGP is operating in STANDALONE mode.


Process       RcvTblVer   bRIB/RIB   LabelVer  ImportVer  SendTblVer  StandbyVer
Speaker              36         36         36         36          36           0

Neighbor        Spk    AS MsgRcvd MsgSent   TblVer  InQ OutQ  Up/Down  St/PfxRcd
cafe:0:4::4       0   100      47      48       36    0    0 00:40:05          5
cafe:0:5::5       0   100      47      47       36    0    0 00:39:56          5


Node1# show bgp vpnv4 unicast rd 100:1

BGP router identifier 10.1.1.1, local AS number 100
BGP generic scan interval 60 secs
Non-stop routing is enabled
BGP table state: Active
Table ID: 0x0   RD version: 0
BGP main routing table version 36
BGP NSR Initial initsync version 16 (Reached)
BGP NSR/ISSU Sync-Group versions 0/0
BGP scan interval 60 secs

Status codes: s suppressed, d damped, h history, * valid, > best
              i - internal, r RIB-failure, S stale, N Nexthop-discard
Origin codes: i - IGP, e - EGP, ? - incomplete
   Network            Next Hop            Metric LocPrf Weight Path
Route Distinguisher: 100:1 (default for vrf vrf_cust1)
```

```
*> 12.1.1.1/32        0.0.0.0                  0         32768 ?
*>i12.4.4.4/32        cafe:0:4::4              0    100      0 ?
*>i12.5.5.5/32        cafe:0:5::5              0    100      0 ?

Processed 3 prefixes, 3 paths


Node1# show bgp vpnv4 unicast rd 100:1 12.4.4.4/32

BGP routing table entry for 12.4.4.4/32, Route Distinguisher: 100:1
Versions:
  Process           bRIB/RIB  SendTblVer
  Speaker                 22          22
Last Modified: Feb 23 22:57:56.756 for 00:40:08
Paths: (1 available, best #1)
  Not advertised to any peer
  Path #1: Received by speaker 0
  Not advertised to any peer
  Local, (received & used)
    cafe:0:4::4 (metric 30) from cafe:0:4::4 (10.1.1.4)
      Received Label 0xe00400
      Origin incomplete, metric 0, localpref 100, valid, internal, best, group-best,
import-candidate, imported
      Received Path ID 0, Local Path ID 1, version 22
      Extended community: RT:1:1 RT:100:1
      PSID-Type:L3, SubTLV Count:1
       SubTLV:
        T:1(Sid information), Sid:cafe:0:4::, Behavior:63, SS-TLV Count:1
         SubSubTLV:
          T:1(Sid structure):
      Source AFI: VPNv4 Unicast, Source VRF: vrf_cust1, Source Route Distinguisher: 100:1
```

The following examples show how to verify the BGP prefix information for VRF instances using the **show bgp vrf** commands:

```
Node1# show bgp vrf vrf_cust1 ipv4 unicast

BGP VRF vrf_cust1, state: Active
BGP Route Distinguisher: 100:1
VRF ID: 0x60000002
BGP router identifier 10.1.1.1, local AS number 100
Non-stop routing is enabled
BGP table state: Active
Table ID: 0xe0000011   RD version: 32
BGP main routing table version 36
BGP NSR Initial initsync version 16 (Reached)
BGP NSR/ISSU Sync-Group versions 0/0

Status codes: s suppressed, d damped, h history, * valid, > best
              i - internal, r RIB-failure, S stale, N Nexthop-discard
Origin codes: i - IGP, e - EGP, ? - incomplete
   Network           Next Hop            Metric LocPrf Weight Path
Route Distinguisher: 100:1 (default for vrf vrf_cust1)
*> 12.1.1.1/32        0.0.0.0                  0         32768 ?
*>i12.4.4.4/32        cafe:0:4::4              0    100      0 ?
*>i12.5.5.5/32        cafe:0:5::5              0    100      0 ?

Processed 3 prefixes, 3 paths


Node1# show bgp vrf vrf_cust1 ipv4 unicast 12.4.4.4/32
Tue Feb 23 23:39:57.499 UTC
BGP routing table entry for 12.4.4.4/32, Route Distinguisher: 100:1
```

```
Versions:
  Process           bRIB/RIB  SendTblVer
  Speaker                 22          22
Last Modified: Feb 23 22:57:56.756 for 00:42:01
Paths: (1 available, best #1)
  Not advertised to any peer
  Path #1: Received by speaker 0
  Not advertised to any peer
  Local, (received & used)
    cafe:0:4::4 (metric 30) from cafe:0:4::4 (10.1.1.4)
      Received Label 0xe00400
      Origin incomplete, metric 0, localpref 100, valid, internal, best, group-best,
import-candidate, imported
      Received Path ID 0, Local Path ID 1, version 22
      Extended community: RT:1:1 RT:100:1
      PSID-Type:L3, SubTLV Count:1
       SubTLV:
        T:1(Sid information), Sid:cafe:0:4::, Behavior:63, SS-TLV Count:1
         SubSubTLV:
          T:1(Sid structure):
      Source AFI: VPNv4 Unicast, Source VRF: vrf_cust1, Source Route Distinguisher: 100:1
```

The following example shows how to verify the SRv6 based L3VPN configuration using the **show route vrf** commands.

```
Node1# show route vrf vrf_cust1

Codes: C - connected, S - static, R - RIP, B - BGP, (>) - Diversion path
       D - EIGRP, EX - EIGRP external, O - OSPF, IA - OSPF inter area
       N1 - OSPF NSSA external type 1, N2 - OSPF NSSA external type 2
       E1 - OSPF external type 1, E2 - OSPF external type 2, E - EGP
       i - ISIS, L1 - IS-IS level-1, L2 - IS-IS level-2
       ia - IS-IS inter area, su - IS-IS summary null, * - candidate default
       U - per-user static route, o - ODR, L - local, G  - DAGR, l - LISP
       A - access/subscriber, a - Application route
       M - mobile route, r - RPL, t - Traffic Engineering, (!) - FRR Backup path

Gateway of last resort is not set

L    12.1.1.1/32 is directly connected, 00:44:43, Loopback100
B    12.4.4.4/32 [200/0] via cafe:0:4::4 (nexthop in vrf default), 00:42:45
B    12.5.5.5/32 [200/0] via cafe:0:5::5 (nexthop in vrf default), 00:42:45


Node1# show route vrf vrf_cust1 12.4.4.4/32

Routing entry for 12.4.4.4/32
  Known via "bgp 100", distance 200, metric 0, type internal
  Installed Feb 23 22:57:56.746 for 00:43:12
  Routing Descriptor Blocks
    cafe:0:4::4, from cafe:0:4::4
      Nexthop in Vrf: "default", Table: "default", IPv6 Unicast, Table Id: 0xe0800000
      Route metric is 0
  No advertising protos.


Node1# show route vrf vrf_cust1 12.4.4.4/32 detail

Routing entry for 12.4.4.4/32
  Known via "bgp 100", distance 200, metric 0, type internal
  Installed Feb 23 22:57:56.746 for 00:43:37
  Routing Descriptor Blocks
    cafe:0:4::4, from cafe:0:4::4
```

```
      Nexthop in Vrf: "default", Table: "default", IPv6 Unicast, Table Id: 0xe0800000
      Route metric is 0
      Label: None
      Tunnel ID: None
      Binding Label: None
      Extended communities count: 0
      Source RD attributes: 0x0000:100:1
      NHID:0x0(Ref:0)
      SRv6 Headend: H.Encaps.Red [f3216], SID-list {cafe:0:4:e004::}
  Route version is 0x1 (1)
  No local label
  IP Precedence: Not Set
  QoS Group ID: Not Set
  Flow-tag: Not Set
  Fwd-class: Not Set
  Route Priority: RIB_PRIORITY_RECURSIVE (12) SVD Type RIB_SVD_TYPE_REMOTE
  Download Priority 3, Download Version 3
  No advertising protos.
```

The following example shows how to verify the SRv6 based L3VPN configuration using the **show cef vrf** commands.

```
Node1# show cef vrf vrf_cust1

Prefix              Next Hop            Interface
------------------- ------------------- ------------------
0.0.0.0/0           drop                default handler
0.0.0.0/32          broadcast
12.1.1.1/32         receive             Loopback100
12.4.4.4/32         cafe:0:4::/128      <recursive>
12.5.5.5/32         cafe:0:5::/128      <recursive>
224.0.0.0/4         0.0.0.0/32
224.0.0.0/24        receive
255.255.255.255/32  broadcast


Node1# show cef vrf vrf_cust1 12.4.4.4/32

12.4.4.4/32, version 3, SRv6 Headend, internal 0x5000001 0x30 (ptr 0x78b9a61c) [1], 0x0
(0x0), 0x0 (0x88873720)
 Updated Feb 23 22:57:56.749
 Prefix Len 32, traffic index 0, precedence n/a, priority 3
   via cafe:0:4::/128, 3 dependencies, recursive [flags 0x6000]
    path-idx 0 NHID 0x0 [0x78e2da14 0x0]
    next hop VRF - 'default', table - 0xe0800000
    next hop cafe:0:4::/128 via cafe:0:4::/48
    SRv6 H.Encaps.Red SID-list {cafe:0:4:e004::}


Node1# show cef vrf vrf_cust1 12.4.4.4/32 detail

12.4.4.4/32, version 3, SRv6 Headend, internal 0x5000001 0x30 (ptr 0x78b9a61c) [1], 0x0
(0x0), 0x0 (0x88873720)
 Updated Feb 23 22:57:56.749
 Prefix Len 32, traffic index 0, precedence n/a, priority 3
  gateway array (0x88a740a8) reference count 5, flags 0x2010, source rib (7), 0 backups
               [1 type 3 flags 0x48441 (0x789cbcc8) ext 0x0 (0x0)]
  LW-LDI[type=0, refc=0, ptr=0x0, sh-ldi=0x0]
  gateway array update type-time 1 Feb 23 22:57:56.749
 LDI Update time Feb 23 22:57:56.754

  Level 1 - Load distribution: 0
  [0] via cafe:0:4::/128, recursive
```

```
via cafe:0:4::/128, 3 dependencies, recursive [flags 0x6000]
 path-idx 0 NHID 0x0 [0x78e2da14 0x0]
 next hop VRF - 'default', table - 0xe0800000
 next hop cafe:0:4::/128 via cafe:0:4::/48
 SRv6 H.Encaps.Red SID-list {cafe:0:4:e004::}

 Load distribution: 0 1 (refcount 1)

 Hash  OK  Interface                Address
 0     Y   HundredGigE0/0/0/1       remote
 1     Y   HundredGigE0/0/0/0       remote
```

# SRv6 Services: IPv6 L3VPN

*Table 9: Feature History Table*

| Feature Name | Release Information | Feature Description |
|---|---|---|
| SRv6 Services: IPv6 L3VPN | Release 7.3.1 | With this feature, the egress PE can signal an SRv6 Service SID with the BGP overlay service route. The ingress PE encapsulates the IPv4/IPv6 payload in an outer IPv6 header where the destination address is the SRv6 Service SID provided by the egress PE. BGP messages between PEs carry SRv6 Service SIDs as a means to interconnect PEs and form VPNs. |

This feature provides IPv6 L3VPNs (VPNv6) over an SRv6 network.

### Usage Guidelines and Limitations

- SRv6 locator can be assigned globally, for all VRFs, for an individual VRF, or per-prefix.
- Per-VRF allocation mode is supported (uDT6 behavior)
- Dual-Stack L3VPN Services (IPv4, IPv6) are supported
- Equal-Cost Multi-path (ECMP) and Unequal Cost Multipath (UCMP) are supported.
- BGP (iBGP, eBGP), OSPF, Static are supported as PE-CE protocol.
- BGP route leaking between BGP Global and L3VPN is supported. Refer to the Implementing BGP chapter in the *Routing Configuration Guide for Cisco ASR 9000 Series Routers*.
- MPLS L3VPN and SRv6 L3VPN interworking gateway is supported.
- Per-CE allocation mode is not supported (uDX6 behavior)

### Configuring SRv6-based IPv6 L3VPN

To enable SRv6-based L3VPN, you need to enable SRv6 under BGP, specify the locator, and configure the SID allocation mode. The assignment of the locator can be done in different places under the **router bgp** configuration. See SRv6 Locator Inheritance Rules, on page 46.

#### Use Case 1: Assigning SRv6 Locator Globally

This example shows how to configure the SRv6 locator name under BGP Global:

```
Node1(config)# router bgp 100
Node1(config-bgp)# segment-routing srv6
Node1(config-bgp-gbl-srv6)# locator Node1-locator
Node1(config-bgp-gbl-srv6)# exit
Node1(config-bgp)# address-family vpnv6 unicast
Node1(config-bgp-af)# exit
Node1(config-bgp)# neighbor 3001::12:1:1:4
Node1(config-bgp-nbr)# remote-as 100
Node1(config-bgp-nbr)# address-family vpnv6 unicast
Node1(config-bgp-nbr-af)# exit
Node1(config-bgp-nbr)# exit
Node1(config-bgp)# vrf vrf_cust6
Node1(config-bgp-vrf)# rd 100:6
Node1(config-bgp-vrf)# address-family ipv6 unicast
Node1(config-bgp-vrf-af)# commit
```

#### Running Configuration

```
router bgp 100
 segment-routing srv6
  locator Node1-locator
 !
 address-family vpnv6 unicast
 !
 neighbor 3001::12:1:1:4
  remote-as 100
  address-family vpnv6 unicast
  !
 !
 vrf vrf_cust6
  rd 100:6
  address-family ipv6 unicast
  !
 !
!
end
```

#### Use Case 2: Assigning SRv6 Locator for All VRFs

To configure the SRv6 locator for all VRFs under VPNv6 Address Family and specify the allocation mode, use the following commands:

- **router bgp** *as-number* **address-family vpnv6 unicast vrf all segment-routing srv6**: Enable SRv6
- **router bgp** *as-number* **address-family vpnv6 unicast vrf all segment-routing srv6 alloc mode** {**per-vrf**}: Specify the SID behavior (allocation mode)
  - Use the **per-vrf** keyword to specify that the same service SID (uDT6 behavior) be used for all the routes advertised from a unique VRF.
- **router bgp** *as-number* **address-family vpnv6 unicast vrf all segment-routing srv6 locator** *WORD*: Specify the locator

This example shows how to configure the SRv6 locator for all VRFs under VPNv6 Address Family, with per-VRF label allocation mode:

```
Node1(config)# router bgp 100
Node1(config-bgp)# address-family vpnv6 unicast
Node1(config-bgp-af)# vrf all
Node1(config-bgp-af-vrfall)# segment-routing srv6
Node1(config-bgp-af-vrfall-srv6)# locator Node1-locator
Node1(config-bgp-af-vrfall-srv6)# alloc mode per-vrf
Node1(config-bgp-af-vrfall-srv6)# exit
Node1(config-bgp-af-vrfall)# exit
Node1(config-bgp-af)# exit
Node1(config-bgp)# neighbor 3001::12:1:1:4
Node1(config-bgp-nbr)# remote-as 100
Node1(config-bgp-nbr)# address-family vpnv6 unicast
Node1(config-bgp-nbr-af)# exit
Node1(config-bgp-nbr)# exit
Node1(config-bgp)# vrf vrf_cust6
Node1(config-bgp-vrf)# rd 100:6
Node1(config-bgp-vrf)# address-family ipv6 unicast
Node1(config-bgp-vrf-af)# commit
```

### Running Configuration

```
router bgp 100
 address-family vpnv6 unicast
  vrf all
   segment-routing srv6
    locator Node1-locator
    alloc mode per-vrf
   !
  !
 !
 neighbor 3001::12:1:1:4
  remote-as 100
  address-family vpnv6 unicast
  !
 !
 vrf vrf_cust6
  rd 100:6
  address-family ipv6 unicast
  !
 !
!
end
```

### Use Case 3: Assigning SRv6 Locator for a specific VRF

To configure the SRv6 locator for a specific VRF under IPv6 Address Family and specify the allocation mode, use the following commands:

- **router bgp** *as-number* **vrf** *WORD* **address-family ipv6 unicast segment-routing srv6**: Enable SRv6
- **router bgp** *as-number* **vrf** *WORD* **address-family ipv6 unicast segment-routing srv6 alloc mode** { **per-vrf**}: Specify the SID behavior (allocation mode)
  - Use the **per-vrf** keyword to specify that the same service SID (uDT6 behavior) be used for all the routes advertised from a unique VRF.
- **router bgp** *as-number* **vrf** *WORD* **address-family ipv6 unicast segment-routing srv6 locator** *WORD*: Specify the locator

This example shows how to configure the SRv6 locator for an individual VRF, with per-VRF label allocation mode:

```
Node1(config)# router bgp 100
Node1(config-bgp)# address-family vpnv6 unicast
Node1(config-bgp-af)# exit
Node1(config-bgp)# neighbor 3001::12:1:1:4
Node1(config-bgp-nbr)# remote-as 100
Node1(config-bgp-nbr)# address-family vpnv6 unicast
Node1(config-bgp-nbr-af)# exit
Node1(config-bgp-nbr)# exit
Node1(config-bgp)# vrf vrf_cust6
Node1(config-bgp-vrf)# rd 100:6
Node1(config-bgp-vrf)# address-family ipv6 unicast
Node1(config-bgp-vrf-af)# segment-routing srv6
Node1(config-bgp-vrf-af-srv6)# locator Node1-locator
Node1(config-bgp-vrf-af-srv6)# alloc mode per-vrf
Node1(config-bgp-vrf-af-srv6)# commit
```

### Running Configuration

```
router bgp 100
 address-family vpnv6 unicast
 !
 neighbor 3001::12:1:1:4
  remote-as 100
  address-family vpnv6 unicast
  !
 !
 vrf vrf_cust6
  rd 100:6
  address-family ipv6 unicast
   segment-routing srv6
    locator Node1-locator
    alloc mode per-vrf
   !
  !
 !
!
end
```

### Use Case 4: Assigning SRv6 Locator for a Specific Prefix

This use case provides the ability to assign a specific SRv6 locator for a given prefix or a set of prefixes. The egress PE advertises the prefix with the specified locator. This allows for per-prefix steering into desired transport behaviors, such as Flex Algo.

To assign an SRv6 locator for a specific prefix, configure a route policy to specify the SID allocation mode based on match criteria. Examples of match criteria are destination-based match or community-based match.

- Supported SID allocation mode is per-VRF.
- For per-VRF allocation mode, you can also specify the SRv6 locator.
  - If an SRv6 locator is specified in the route policy, BGP will use that to allocate per-VRF SID. If the specified locator is invalid, the SID will not be allocated.
  - If an SRv6 locator is not specified in the route policy, the default locator is used to allocate the SID. If the default locator is not configured in BGP, then the SID will not be allocated.

For more information on configuring routing policies, refer to the "Implementing Routing Policy" chapter in the *Routing Configuration Guide Cisco ASR 9000 Series Routers*.

The following example shows a route policy specifying the SID allocation mode with destination-based match:

```
Node1(config)# route-policy set_per_prefix_locator_rpl
Node1(config-rpl)# if destination in (3001::1:1:1:1/128) then
Node1(config-rpl-if)# set srv6-alloc-mode per-vrf locator locator1
Node1(config-rpl-if)# elseif destination in (3001::2:2:2:2/128) then
Node1(config-rpl-elseif)# set srv6-alloc-mode per-vrf locator locator2
Node1(config-rpl-elseif)# elseif destination in (3001::3:3:3:3/128) then
Node1(config-rpl-elseif)# set srv6-alloc-mode per-vrf
Node1(config-rpl-elseif)# else
Node1(config-rpl-else)# drop
Node1(config-rpl-else)# endif
Node1(config-rpl)# end-policy
```

To specify per-prefix allocation mode for a specific VRF under IPv6 Address Family, use the following command:

- **router bgp** *as-number* **vrf** *WORD* **address-family ipv6 unicast segment-routing srv6 alloc mode route-policy** *policy_name*

This example shows how to specify per-prefix allocation mode for a specific VRF (vrf_cust6) under the IPv6 address family:

```
Node1(config)# router bgp 100
Node1(config-bgp)# vrf vrf_cust6
Node1(config-bgp-vrf)# address-family ipv6 unicast
Node1(config-bgp-vrf-af)# segment-routing srv6
Node1(config-bgp-vrf-af-srv6)# alloc mode route-policy set_per_prefix_locator_rpl
```

### Running Configuration

```
route-policy set_per_prefix_locator_rpl
  if destination in (3001::1:1:1:1/128) then
    set srv6-alloc-mode per-vrf locator locator1
  elseif destination in (3001::2:2:2:2/128) then
    set srv6-alloc-mode per-vrf locator locator2
  elseif destination in (3001::3:3:3:3/128) then
    set srv6-alloc-mode per-vrf
  else
    drop
  endif
end-policy
!
router bgp 100
 vrf vrf_cust6
  address-family ipv6 unicast
   segment-routing srv6
    alloc mode route-policy set_per_prefix_locator_rpl
   !
  !
 !
!
```

Verify that the local and received SIDs have been correctly allocated under VPNv6 and specific VRF (vrf_cust6):

```
Node1# show bgp vpnv6 unicast local-sids
```

```
BGP router identifier 10.1.1.1, local AS number 1
BGP generic scan interval 60 secs
Non-stop routing is enabled
BGP table state: Active
Table ID: 0x0   RD version: 0
BGP main routing table version 50
BGP NSR Initial initsync version 18 (Reached)
BGP NSR/ISSU Sync-Group versions 0/0
BGP scan interval 60 secs

Status codes: s suppressed, d damped, h history, * valid, > best
              i - internal, r RIB-failure, S stale, N Nexthop-discard
Origin codes: i - IGP, e - EGP, ? - incomplete
   Network            Local Sid                                Alloc mode   Locator
Route Distinguisher: 8:8
*>i3008::8:8:8:8/128  NO SRv6 Sid                              -            -
* i                   NO SRv6 Sid                              -            -
Route Distinguisher: 100:6 (default for vrf vrf_cust6)
*> 3001::1:1:1:1/128  fc00:0:1:40::                            per-vrf      locator1
*> 3001::2:2:2:2/128  fc00:8:1:40::                            per-vrf      locator2
*> 3001::3:3:3:3/128  fc00:9:1:40::                            per-vrf      locator4
*> 3001::5:5:5:5/128  NO SRv6 Sid                              -            -
*> 3001::12:1:1:5/128 NO SRv6 Sid                              -            -
*>i3008::8:8:8:8/128  NO SRv6 Sid                              -            -


Node1# show bgp vpnv6 unicast received-sids

BGP router identifier 10.1.1.1, local AS number 1
BGP generic scan interval 60 secs
Non-stop routing is enabled
BGP table state: Active
Table ID: 0x0   RD version: 0
BGP main routing table version 50
BGP NSR Initial initsync version 18 (Reached)
BGP NSR/ISSU Sync-Group versions 0/0
BGP scan interval 60 secs

Status codes: s suppressed, d damped, h history, * valid, > best
              i - internal, r RIB-failure, S stale, N Nexthop-discard
Origin codes: i - IGP, e - EGP, ? - incomplete
   Network            Next Hop                            Received Sid
Route Distinguisher: 8:8
*>i3008::8:8:8:8/128  10.1.1.2                            fc00:0:2:42::
* i                   2400:2020:42:2fff::1
                                                          fc00:0:2:42::
Route Distinguisher: 100:6 (default for vrf vrf_cust6)
*> 3001::1:1:1:1/128  11.1.1.2                            NO SRv6 Sid
*> 3001::2:2:2:2/128  11.1.1.2                            NO SRv6 Sid
*> 3001::3:3:3:3/128  11.1.1.2                            NO SRv6 Sid
*> 3001::5:5:5:5/128  11.1.1.2                            NO SRv6 Sid
*> 3001::12:1:1:5/128 13.2.2.2                            NO SRv6 Sid
*>i3008::8:8:8:8/128  10.1.1.2                            fc00:0:2:42::


Node1# show bgp vrf vrf_cust6 local-sids
BGP VRF vrf_cust6, state: Active
BGP Route Distinguisher: 10.1.1.1:0
VRF ID: 0x60000004
BGP router identifier 10.1.1.1, local AS number 1
Non-stop routing is enabled
BGP table state: Active
Table ID: 0xe0000013   RD version: 37
BGP main routing table version 37
BGP NSR Initial initsync version 18 (Reached)
```

```
BGP NSR/ISSU Sync-Group versions 0/0

Status codes: s suppressed, d damped, h history, * valid, > best
              i - internal, r RIB-failure, S stale, N Nexthop-discard
Origin codes: i - IGP, e - EGP, ? - incomplete
   Network            Local Sid                                   Alloc mode   Locator
Route Distinguisher: 8:8
*>i3008::8:8:8:8/128  NO SRv6 Sid                                 -            -
* i                   NO SRv6 Sid                                 -            -
Route Distinguisher: 100:6 (default for vrf vrf_cust6)
*> 3001::1:1:1:1/128  fc00:0:1:40::                               per-vrf      locator1
*> 3001::2:2:2:2/128  fc00:8:1:40::                               per-vrf      locator2
*> 3001::3:3:3:3/128  fc00:9:1:40::                               per-vrf      locator4
*> 3001::5:5:5:5/128  NO SRv6 Sid                                 -            -
*> 3001::12:1:1:5/128 NO SRv6 Sid                                 -            -
*>i3008::8:8:8:8/128  NO SRv6 Sid                                 -            -


Node1# show bgp vrf vrf_cust6 received-sids
BGP VRF vrf_cust6, state: Active
BGP Route Distinguisher: 100:6
VRF ID: 0x60000004
BGP router identifier 10.1.1.1, local AS number 1
Non-stop routing is enabled
BGP table state: Active
Table ID: 0xe0000013   RD version: 37
BGP main routing table version 37
BGP NSR Initial initsync version 18 (Reached)
BGP NSR/ISSU Sync-Group versions 0/0

Status codes: s suppressed, d damped, h history, * valid, > best
              i - internal, r RIB-failure, S stale, N Nexthop-discard
Origin codes: i - IGP, e - EGP, ? - incomplete
   Network            Next Hop                            Received Sid
Route Distinguisher: 100:6 (default for vrf vrf_cust6)
*> 3001::1:1:1:1/128  11.1.1.2                            NO SRv6 Sid
*> 3001::2:2:2:2/128  11.1.1.2                            NO SRv6 Sid
*> 3001::3:3:3:3/128  11.1.1.2                            NO SRv6 Sid
*> 3001::5:5:5:5/128  11.1.1.2                            NO SRv6 Sid
*> 3001::12:1:1:5/128 13.2.2.2                            NO SRv6 Sid
*>i3008::8:8:8:8/128  10.1.1.2                            fc00:0:2:42::
```

### Verification

The following figure shows a VPNv6 scenario. The sequence of commands included correspond to router Node1 acting as Ingress PE, and routers Node4 and Node5 acting as Egress PEs.

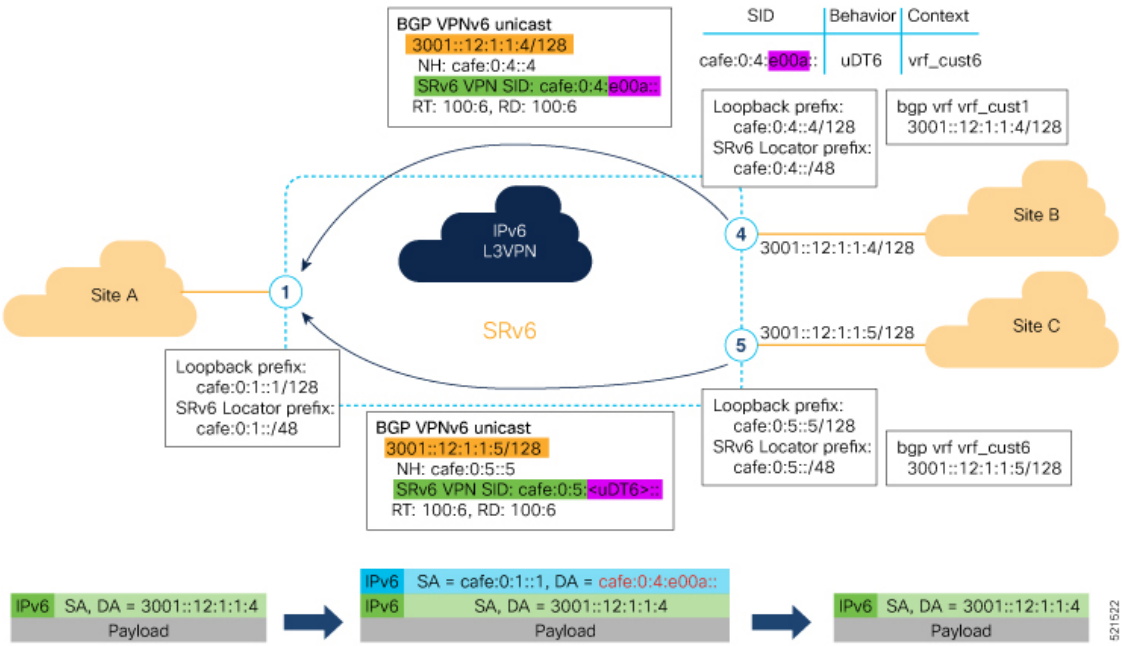


The following examples shows how to verify the SRv6 based L3VPN configurations for an Individual VRF with per VRF label allocation mode.

In this example, we can observe the uDT6 SID associated with the IPv6 L3VPN, where uDT6 behavior represents Endpoint with decapsulation and IPv6 table lookup.

```
Node1# show segment-routing srv6 sid
Fri Jan 29 19:31:53.293 UTC

*** Locator: 'Node1-locator' ***

SID                         Behavior          Context                          Owner
          State  RW
--------------------------  ----------------  ------------------------------
------------------  -----  --
cafe:0:1::                  uN (PSP/USD)      'default':1                      sidmgr
          InUse  Y
cafe:0:1:e000::             uA (PSP/USD)      [Hu0/0/0/0, Link-Local]:0        isis-1
          InUse  Y
cafe:0:1:e001::             uA (PSP/USD)      [Hu0/0/0/1, Link-Local]:0        isis-1
          InUse  Y
cafe:0:1:e002::             uDT4              'vrf_cust1'                      bgp-100
          InUse  Y
cafe:0:1:e003::             uDT4              'vrf_cust2'                      bgp-100
          InUse  Y
cafe:0:1:e004::             uDT4              'vrf_cust3'                      bgp-100
          InUse  Y
cafe:0:1:e005::             uDT4              'vrf_cust4'                      bgp-100
          InUse  Y
cafe:0:1:e006::             uDT4              'vrf_cust5'                      bgp-100
          InUse  Y
cafe:0:1:e007::             uA (PSP/USD)      [Hu0/0/0/0, Link-Local]:0:P      isis-1
          InUse  Y
cafe:0:1:e008::             uA (PSP/USD)      [Hu0/0/0/1, Link-Local]:0:P      isis-1
          InUse  Y
cafe:0:1:e009::             uDT6              'default'                        bgp-100
          InUse  Y
cafe:0:1:e00a::             uDT6              'vrf_cust6'                      bgp-100
```

```
          InUse  Y
```

The following examples show how to verify the SRv6 based L3VPN configuration using the **show bgp vpnv6 unicast** commands on the Ingress PE.

```
Node1# show bgp vpnv6 unicast summary
Fri Jan 29 19:33:01.177 UTC
BGP router identifier 10.1.1.1, local AS number 100
BGP generic scan interval 60 secs
Non-stop routing is enabled
BGP table state: Active
Table ID: 0x0   RD version: 0
BGP main routing table version 6
BGP NSR Initial initsync version 4 (Reached)
BGP NSR/ISSU Sync-Group versions 0/0
BGP scan interval 60 secs

BGP is operating in STANDALONE mode.


Process       RcvTblVer   bRIB/RIB   LabelVer  ImportVer  SendTblVer  StandbyVer
Speaker               6          6          6          6           6           0

Neighbor        Spk    AS MsgRcvd MsgSent   TblVer  InQ OutQ  Up/Down  St/PfxRcd
cafe:0:4::4       0   100     122     123        6    0    0 00:20:05          1
cafe:0:5::5       0   100     111     111        0    0    0 00:49:46          1

Node1# show bgp vpnv6 unicast rd 100:6
Fri Jan 29 19:41:01.334 UTC
BGP router identifier 10.1.1.1, local AS number 100
BGP generic scan interval 60 secs
Non-stop routing is enabled
BGP table state: Active
Table ID: 0x0   RD version: 0
BGP main routing table version 8
BGP NSR Initial initsync version 4 (Reached)
BGP NSR/ISSU Sync-Group versions 0/0
BGP scan interval 60 secs

Status codes: s suppressed, d damped, h history, * valid, > best
              i - internal, r RIB-failure, S stale, N Nexthop-discard
Origin codes: i - IGP, e - EGP, ? - incomplete
   Network            Next Hop            Metric LocPrf Weight Path
Route Distinguisher: 100:6 (default for vrf vrf_cust6)
*> 3001::12:1:1:1/128 ::                       0         32768 ?
*>i3001::12:1:1:4/128 cafe:0:4::4              0    100      0 ?
*>i3001::12:1:1:5/128 cafe:0:5::5              0    100      0 ?

Processed 3 prefixes, 3 paths

Node1# show bgp vpnv6 unicast rd 100:6 3001::12:1:1:4/128
Fri Jan 29 19:41:42.008 UTC
BGP routing table entry for 3001::12:1:1:4/128, Route Distinguisher: 100:6
Versions:
  Process           bRIB/RIB  SendTblVer
  Speaker                  6           6
Last Modified: Jan 29 19:29:35.858 for 00:12:06
Paths: (1 available, best #1)
  Not advertised to any peer
  Path #1: Received by speaker 0
  Not advertised to any peer
  Local, (received & used)
    cafe:0:4::4 (metric 30) from cafe:0:4::4 (10.1.1.4)
```

```
      Received Label 0xe00a00
      Origin incomplete, metric 0, localpref 100, valid, internal, best, group-best,
import-candidate, imported
      Received Path ID 0, Local Path ID 1, version 6
      Extended community: RT:100:6
      PSID-Type:L3, SubTLV Count:1
       SubTLV:
        T:1(Sid information), Sid:cafe:0:4::, Behavior:62, SS-TLV Count:1
         SubSubTLV:
          T:1(Sid structure):
      Source AFI: VPNv6 Unicast, Source VRF: vrf_cust6, Source Route Distinguisher: 100:6
```

The following examples show how to verify the BGP prefix information for VRF instances:

```
Node1# show bgp vrf vrf_cust6 ipv6 unicast
Fri Jan 29 19:42:05.675 UTC
BGP VRF vrf_cust6, state: Active
BGP Route Distinguisher: 100:6
VRF ID: 0x60000007
BGP router identifier 10.1.1.1, local AS number 100
Non-stop routing is enabled
BGP table state: Active
Table ID: 0xe0800016   RD version: 8
BGP main routing table version 8
BGP NSR Initial initsync version 4 (Reached)
BGP NSR/ISSU Sync-Group versions 0/0

Status codes: s suppressed, d damped, h history, * valid, > best
              i - internal, r RIB-failure, S stale, N Nexthop-discard
Origin codes: i - IGP, e - EGP, ? - incomplete
   Network          Next Hop            Metric LocPrf Weight Path
Route Distinguisher: 100:6 (default for vrf vrf_cust6)
*> 3001::12:1:1:1/128 ::                      0         32768 ?
*>i3001::12:1:1:4/128 cafe:0:4::4             0    100      0 ?
*>i3001::12:1:1:5/128 cafe:0:5::5             0    100      0 ?

Processed 3 prefixes, 3 paths

Node1# show bgp vrf vrf_cust6 ipv6 unicast 3001::12:1:1:4/128

BGP routing table entry for 3001::12:1:1:4/128, Route Distinguisher: 100:6
Versions:
  Process           bRIB/RIB  SendTblVer
  Speaker                 17          17
Last Modified: Jan 15 16:50:44.032 for 01:48:21
Paths: (1 available, best #1)
  Not advertised to any peer
  Path #1: Received by speaker 0
  Not advertised to any peer
  Local, (received & used)
    cafe:0:4::4 (metric 30) from cafe:0:4::4 (10.1.1.4)
      Received Label 0xe00a00
      Origin incomplete, metric 0, localpref 100, valid, internal, best, group-best,
import-candidate, imported
      Received Path ID 0, Local Path ID 1, version 17
      Extended community: RT:100:6
      PSID-Type:L3, SubTLV Count:1
       SubTLV:
        T:1(Sid information), Sid:cafe:0:4::, Behavior:62, SS-TLV Count:1
         SubSubTLV:
          T:1(Sid structure):
      Source AFI: VPNv6 Unicast, Source VRF: vrf_cust6, Source Route Distinguisher: 100:6
```

The following examples show how to verify the current routes in the Routing Information Base (RIB):

```
Node1# show route vrf vrf_cust6 ipv6 unicast
Fri Jan 29 19:43:28.067 UTC

Codes: C - connected, S - static, R - RIP, B - BGP, (>) - Diversion path
       D - EIGRP, EX - EIGRP external, O - OSPF, IA - OSPF inter area
       N1 - OSPF NSSA external type 1, N2 - OSPF NSSA external type 2
       E1 - OSPF external type 1, E2 - OSPF external type 2, E - EGP
       i - ISIS, L1 - IS-IS level-1, L2 - IS-IS level-2
       ia - IS-IS inter area, su - IS-IS summary null, * - candidate default
       U - per-user static route, o - ODR, L - local, G  - DAGR, l - LISP
       A - access/subscriber, a - Application route
       M - mobile route, r - RPL, t - Traffic Engineering, (!) - FRR Backup path

Gateway of last resort is not set

L    3001::12:1:1:1/128 is directly connected,
      01:01:23, Loopback105
B    3001::12:1:1:4/128
      [200/0] via cafe:0:4::4 (nexthop in vrf default), 00:13:52
B    3001::12:1:1:5/128
      [200/0] via cafe:0:5::5 (nexthop in vrf default), 00:05:53

Node1# show route vrf vrf_cust6 ipv6 unicast 3001::12:1:1:4/128
Fri Jan 29 19:43:55.645 UTC

Routing entry for 3001::12:1:1:4/128
  Known via "bgp 100", distance 200, metric 0, type internal
  Installed Jan 29 19:29:35.696 for 00:14:20
  Routing Descriptor Blocks
    cafe:0:4::4, from cafe:0:4::4
      Nexthop in Vrf: "default", Table: "default", IPv6 Unicast, Table Id: 0xe0800000
      Route metric is 0
  No advertising protos.

Node1# show route vrf vrf_cust6 ipv6 unicast 3001::12:1:1:4/128 detail
Fri Jan 29 19:44:17.914 UTC

Routing entry for 3001::12:1:1:4/128
  Known via "bgp 100", distance 200, metric 0, type internal
  Installed Jan 29 19:29:35.696 for 00:14:42
  Routing Descriptor Blocks
    cafe:0:4::4, from cafe:0:4::4
      Nexthop in Vrf: "default", Table: "default", IPv6 Unicast, Table Id: 0xe0800000
      Route metric is 0
      Label: None
      Tunnel ID: None
      Binding Label: None
      Extended communities count: 0
      Source RD attributes: 0x0000:100:6
      NHID:0x0(Ref:0)
      SRv6 Headend: H.Encaps.Red [f3216], SID-list {cafe:0:4:e00a::}
  Route version is 0x1 (1)
  No local label
  IP Precedence: Not Set
  QoS Group ID: Not Set
  Flow-tag: Not Set
  Fwd-class: Not Set
  Route Priority: RIB_PRIORITY_RECURSIVE (12) SVD Type RIB_SVD_TYPE_REMOTE
  Download Priority 3, Download Version 3
  No advertising protos.
```

The following examples show how to verify the current IPv6 Cisco Express Forwarding (CEF) table:

```
Node1# show cef vrf vrf_cust6 ipv6
Fri Jan 29 19:44:56.888 UTC

::/0
  drop       default handler
3001::12:1:1:1/128
  receive    Loopback105
3001::12:1:1:4/128
  recursive    cafe:0:4::/128
3001::12:1:1:5/128
  recursive    cafe:0:5::/128
fe80::/10
  receive
ff02::/16
  receive
ff02::2/128
  receive
ff02::1:ff00:0/104
  receive
ff05::/16
  receive
ff12::/16
  receive

Node1# show cef vrf vrf_cust6 ipv6 3001::12:1:1:4/128
Fri Jan 29 19:45:23.607 UTC
3001::12:1:1:4/128, version 3, SRv6 Headend, internal 0x5000001 0x30 (ptr 0x78f2e0e0) [1],
 0x0 (0x0), 0x0 (0x888a3ac8)
 Updated Jan 29 19:29:35.700
 Prefix Len 128, traffic index 0, precedence n/a, priority 3
   via cafe:0:4::/128, 7 dependencies, recursive [flags 0x6000]
    path-idx 0 NHID 0x0 [0x78cd2a14 0x0]
    next hop VRF - 'default', table - 0xe0800000
    next hop cafe:0:4::/128 via cafe:0:4::/48
    SRv6 H.Encaps.Red SID-list {cafe:0:4:e00a::}

Node1# show cef vrf vrf_cust6 ipv6 3001::12:1:1:4/128 detail
Fri Jan 29 19:45:55.847 UTC
3001::12:1:1:4/128, version 3, SRv6 Headend, internal 0x5000001 0x30 (ptr 0x78f2e0e0) [1],
 0x0 (0x0), 0x0 (0x888a3ac8)
 Updated Jan 29 19:29:35.700
 Prefix Len 128, traffic index 0, precedence n/a, priority 3
  gateway array (0x78afe238) reference count 1, flags 0x2010, source rib (7), 0 backups
                [1 type 3 flags 0x48441 (0x78ba9a60) ext 0x0 (0x0)]
  LW-LDI[type=0, refc=0, ptr=0x0, sh-ldi=0x0]
  gateway array update type-time 1 Jan 29 19:29:35.699
 LDI Update time Jan 29 19:29:35.701

  Level 1 - Load distribution: 0
  [0] via cafe:0:4::/128, recursive

   via cafe:0:4::/128, 7 dependencies, recursive [flags 0x6000]
    path-idx 0 NHID 0x0 [0x78cd2a14 0x0]
    next hop VRF - 'default', table - 0xe0800000
    next hop cafe:0:4::/128 via cafe:0:4::/48
    SRv6 H.Encaps.Red SID-list {cafe:0:4:e00a::}

    Load distribution: 0 1 (refcount 1)

    Hash  OK  Interface                 Address
    0     Y   HundredGigE0/0/0/0        remote
```

```
1     Y   HundredGigE0/0/0/1        remote
```

# SRv6 Services: IPv4 BGP Global

This feature extends support of SRv6-based BGP services to include IPv4 global BGP by implementing uDT4 SRv6 functions at the PE node (draft-ietf-bess-srv6-services).

### Usage Guidelines and Limitations

- SRv6 locator can be assigned globally or under IPv4 unicast address family
- Equal-Cost Multi-path (ECMP) and Unequal Cost Multipath (UCMP) are supported.
- BGP, OSPF, Static are supported as PE-CE protocol.
- BGP route leaking between BGP Global and L3VPN is supported. Refer to the Implementing BGP chapter in the *Routing Configuration Guide for Cisco ASR 9000 Series Routers*.
- Dual-Stack L3 Services (IPv4 BGP global, IPv6 BGP global) are supported.

### BGP Global IPv4 Over SRv6 with Per-AFI SID Allocation Mode (uDT4)

To configure BGP global IPv4 over SRv6, use the following commands:

- **router bgp** *as-number* **address-family ipv4 unicast segment-routing srv6**: Enable SRv6
- **router bgp** *as-number* **address-family ipv4 unicast segment-routing srv6 alloc mode** {**per-vrf** | **route-policy** *policy_name*}: Specify the SID behavior (allocation mode).
  - **per-vrf**: Specifies that the same label is be used for all the routes advertised from a unique VRF.
  - **route-policy** *policy_name*: Uses a route policy to determine the SID allocation mode and locator (if provided) for given prefix.
- **router bgp** *as-number* **address-family ipv4 unicast segment-routing srv6 locator** *WORD*: Specify the locator
- **router bgp** *as-number* {**af-group** *WORD*| **neighbor-group** *WORD* | **neighbor** *ipv6-addr*} **address-family ipv4 unicast encapsulation-type srv6**: Specify the encapuslation type for SRv6.
  - Use **af-group** *WORD* to apply the SRv6 encapsulation type to the address family group for BGP neighbors.
  - Use **neighbor-group** *WORD*to apply the SRv6 encapsulation type to the neighbor group for BGP neighbors.
  - Use **neighbor** *ipv6-addr* to apply the SRv6 encapsulation type to the specific BGP neighbor.

#### Use Case 1: BGP Global IPv4 over SRv6 with Per-AFI SID Allocation

The following example shows how to configure BGP global IPv4 over SRv6 with per-AFI SID allocation.

```
Node1(config)# router bgp 1
Node1(config-bgp)# bgp router-id 10.1.0.1
Node1(config-bgp)# address-family ipv4 unicast
Node1(config-bgp-af)# segment-routing srv6
```

```
Node1(config-bgp-af-srv6)# locator Node1
Node1(config-bgp-af-srv6)# alloc mode per-vrf
Node1(config-bgp-af-srv6)# exit
Node1(config-bgp-af)# exit
Node1(config-bgp)# neighbor 60::2
Node1(config-bgp-nbr)# remote-as 1
Node1(config-bgp-nbr)# update-source Loopback1
Node1(config-bgp-nbr)# address-family ipv4 unicast
Node1(config-bgp-nbr-af)# encapsulation-type srv6
Node1(config-bgp-nbr-af)# exit
Node1(config-bgp-nbr)# exit
Node1(config-bgp)# neighbor 52.52.52.1
Node1(config-bgp-nbr)# remote-as 3
Node1(config-bgp-nbr)# address-family ipv4 unicast
Node1(config-bgp-nbr-af)# route-policy passall in
Node1(config-bgp-nbr-af)# route-policy passall out
Node1(config-bgp-nbr-af)# commit
```

### Running Configuration

```
router bgp 1
 bgp router-id 10.1.0.1
 address-family ipv4 unicast
  segment-routing srv6
   locator Node1
   alloc mode per-vrf
  !
 !
 neighbor 60::2
  remote-as 1
  update-source Loopback1
  address-family ipv4 unicast
   encapsulation-type srv6
  !
 !
 neighbor 52.52.52.1
  remote-as 3
  address-family ipv4 unicast
   route-policy passall in
   route-policy passall out
  !
 !
!
```

### Use Case 2: BGP Global IPv4 over SRv6 with Per-Prefix SID Allocation

This use case provides the ability to assign a specific SRv6 locator for a given prefix or a set of prefixes. The egress PE advertises the prefix with the specified locator. This allows for per-prefix steering into desired transport behaviors, such as Flex Algo.

To assign an SRv6 locator for a specific prefix, configure a route policy to specify the SID allocation mode based on match criteria. Examples of match criteria are destination-based match or community-based match.

- Supported SID allocation mode is per-VRF.
- For per-VRF allocation mode, you can also specify the SRv6 locator.
  - If an SRv6 locator is specified in the route policy, BGP will use that to allocate per-VRF SID. If the specified locator is invalid, the SID will not be allocated.

- If an SRv6 locator is not specified in the route policy, the default locator is used to allocate the SID. If the default locator is not configured in BGP, then the SID will not be allocated.

For more information on configuring routing policies, refer to the "Implementing Routing Policy" chapter in the *Routing Configuration Guide for Cisco ASR 9000 Series Routers*.

The following example shows a route policy specifying the SID allocation mode with destination-based match:

```
Node1(config)# route-policy set_per_prefix_locator_rpl
Node1(config-rpl)# if destination in (10.1.1.0/24) then
Node1(config-rpl-if)# set srv6-alloc-mode per-vrf locator locator1
Node1(config-rpl-if)# elseif destination in (2.2.2.0/24) then
Node1(config-rpl-elseif)# set srv6-alloc-mode per-vrf locator locator2
Node1(config-rpl-elseif)# elseif destination in (3.3.3.0/24) then
Node1(config-rpl-elseif)# set srv6-alloc-mode per-vrf
Node1(config-rpl-elseif)# else
Node1(config-rpl-else)# drop
Node1(config-rpl-else)# endif
Node1(config-rpl)# end-policy
Node1(config)#
```

The following example shows how to configure BGP global IPv4 over SRv6 with a route policy to determine the SID allocation mode for given prefix.

```
Node1(config)# router bgp 100
Node1(config-bgp)# address-family ipv4 unicast
Node1(config-bgp-af)# segment-routing srv6
Node1(config-bgp-af-srv6)# alloc mode route-policy set_per_prefix_locator_rpl
```

### Running Configuration

```
route-policy set_per_prefix_locator_rpl
  if destination in (10.1.1.0/24) then
    set srv6-alloc-mode per-vrf locator locator1
  elseif destination in (2.2.2.0/24) then
    set srv6-alloc-mode per-vrf locator locator2
  elseif destination in (3.3.3.0/24) then
    set srv6-alloc-mode per-vrf
  else
    drop
  endif
end-policy
!
router bgp 100
 address-family ipv4 unicast
  segment-routing srv6
   alloc mode route-policy set_per_prefix_locator_rpl
  !
 !
!
```

Verify that the local and received SIDs have been correctly allocated under BGP IPv4 address family:

```
Node1# show bgp ipv4 unicast local-sids
…
Status codes: s suppressed, d damped, h history, * valid, > best
              i - internal, r RIB-failure, S stale, N Nexthop-discard
Origin codes: i - IGP, e - EGP, ? - incomplete
   Network           Local Sid                                  Alloc mode   Locator
*> 10.1.1.0/24       fc00:8:1:41::                              per-vrf      locator2
*> 2.2.2.0/24        fc00:0:1:41::                              per-vrf      locator1
```

```
*> 3.3.3.0/24         fc00:9:1:42::                                per-vrf      locator4
*> 10.1.1.5/32        NO SRv6 Sid                                  -            -
* i8.8.8.8/32         NO SRv6 Sid                                  -            -

Node1# show bgp ipv4 unicast received-sids
…
Status codes: s suppressed, d damped, h history, * valid, > best
              i - internal, r RIB-failure, S stale, N Nexthop-discard
Origin codes: i - IGP, e - EGP, ? - incomplete
   Network           Next Hop                           Received Sid
*> 10.1.1.0/24       66.2.2.2                           NO SRv6 Sid
*> 2.2.2.0/24        66.2.2.2                           NO SRv6 Sid
*> 3.3.3.0/24        66.2.2.2                           NO SRv6 Sid
*> 10.1.1.5/32       66.2.2.2                           NO SRv6 Sid
* i8.8.8.8/32        77.1.1.2                           fc00:0:2:41::
```

# SRv6 Services: IPv6 BGP Global

*Table 10: Feature History Table*

| Feature Name | Release Information | Feature Description |
|---|---|---|
| SRv6 Services: BGP Global IPv6 | Release 7.3.1 | With this feature, the egress PE can signal an SRv6 Service SID with the BGP global route. The ingress PE encapsulates the IPv4/IPv6 payload in an outer IPv6 header where the destination address is the SRv6 Service SID provided by the egress PE. BGP messages between PEs carry SRv6 Service SIDs as a means to interconnect PEs. |

This feature extends support of SRv6-based BGP services to include IPv6 global BGP by implementing uDT6 SRv6 functions at the PE node (draft-ietf-bess-srv6-services).

### Usage Guidelines and Limitations

- SRv6 locator can be assigned globally or under IPv6 unicast address family
- Equal-Cost Multi-path (ECMP) and Unequal Cost Multipath (UCMP) are supported.
- BGP, OSPF, Static are supported as PE-CE protocol.
- BGP route leaking between BGP Global and L3VPN is supported. Refer to the Implementing BGP chapter in the *Routing Configuration Guide for Cisco ASR 9000 Series Routers*.
- Dual-Stack L3 Services (IPv4 BGP global, IPv6 BGP global) are supported.

### BGP Global IPv6 Over SRv6 with Per-AFI SID Allocation Mode (uDT6)

To configure BGP global IPv6 over SRv6, use the following commands:

- **router bgp** *as-number* **address-family ipv6 unicast segment-routing srv6**: Enable SRv6

- **router bgp** *as-number* **address-family ipv6 unicast segment-routing srv6 alloc mode** {**per-vrf** | **route-policy** *policy_name*}: Specify the SID behavior (allocation mode).
  - **per-vrf**: Specifies that the same label is be used for all the routes advertised from a unique VRF.
  - **route-policy** *policy_name*: Uses a route policy to determine the SID allocation mode and locator (if provided) for given prefix.
- **router bgp** *as-number* **address-family ipv6 unicast segment-routing srv6 locator** *WORD*: Specify the locator
- **router bgp** *as-number* {**af-group** *WORD*| **neighbor-group** *WORD* | **neighbor** *ipv6-addr*} **address-family ipv6 unicast encapsulation-type srv6**: Specify the encapuslation type for SRv6.
  - Use **af-group** *WORD* to apply the SRv6 encapsulation type to the address family group for BGP neighbors.
  - Use **neighbor-group** *WORD*to apply the SRv6 encapsulation type to the neighbor group for Border Gateway Protocol (BGP) neighbors.
  - Use **neighbor** *ipv6-addr* to apply the SRv6 encapsulation type to the specific BGP neighbor.

### Use Case 1: BGP Global IPv6 over SRv6 with Per-AFI SID Allocation

The following example shows how to configure BGP global IPv6 over SRv6 with per-AFI SID allocation.

```
Node1(config)# router bgp 100
Node1(config-bgp)# bgp router-id 10.1.1.1
Node1(config-bgp)# segment-routing srv6
Node1(config-bgp-gbl-srv6)# locator Node1
Node1(config-bgp-gbl-srv6)# exit
Node1(config-bgp)# address-family ipv6 unicast
Node1(config-bgp-af)# segment-routing srv6
Node1(config-bgp-af-srv6)# locator Node1
Node1(config-bgp-af-srv6)# alloc mode per-vrf
Node1(config-bgp-af-srv6)# exit
Node1(config-bgp-af)# exit
Node1(config-bgp)# neighbor cafe:0:4::4
Node1(config-bgp-nbr)# address-family ipv6 unicast
Node1(config-bgp-nbr-af)# encapsulation-type srv6
Node1(config-bgp-nbr-af)# exit
Node1(config-bgp-nbr)# exit
Node1(config-bgp)# neighbor cafe:0:5::5
Node1(config-bgp-nbr)# address-family ipv6 unicast
Node1(config-bgp-nbr-af)# encapsulation-type srv6
Node1(config-bgp-nbr-af)# commit
```

### Running Configuration

```
router bgp 100
 bgp router-id 10.1.1.1
 segment-routing srv6
  locator Node1
 !
 address-family ipv6 unicast
  segment-routing srv6
   locator Node1
   alloc mode per-vrf
  !
 !
```

```
 neighbor cafe:0:4::4
  address-family ipv6 unicast
   encapsulation-type srv6
  !
 !
 neighbor cafe:0:5::5
  address-family ipv6 unicast
   encapsulation-type srv6
```

### Use Case 2: BGP Global IPv6 over SRv6 with Per-Prefix SID Allocation

This use case provides the ability to assign a specific SRv6 locator for a given prefix or a set of prefixes. The egress PE advertises the prefix with the specified locator. This allows for per-prefix steering into desired transport behaviors, such as Flex Algo.

To assign an SRv6 locator for a specific prefix, configure a route policy to specify the SID allocation mode based on match criteria. Examples of match criteria are destination-based match or community-based match.

- Supported SID allocation modes are per-VRF and per-CE.
- For per-VRF allocation mode, you can also specify the SRv6 locator.
  - If an SRv6 locator is specified in the route policy, BGP will use that to allocate per-VRF SID. If the specified locator is invalid, the SID will not be allocated.
  - If an SRv6 locator is not specified in the route policy, the default locator is used to allocate the SID. If the default locator is not configured in BGP, then the SID will not be allocated.
- Per-CE allocation mode always uses the default locator to allocate the SID.

For more information on configuring routing policies, refer to the "Implementing Routing Policy" chapter in the *Routing Configuration Guide for Cisco ASR 9000 Series Routers*.

The following example shows a route policy specifying the SID allocation mode with destination-based match:

```
Node1(config)# route-policy set_per_prefix_locator_rpl
Node1(config-rpl)# if destination in (3001::1:1:1:1/128) then
Node1(config-rpl-if)# set srv6-alloc-mode per-vrf locator locator1
Node1(config-rpl-if)# elseif destination in (3001::2:2:2:2/128) then
Node1(config-rpl-elseif)# set srv6-alloc-mode per-vrf locator locator2
Node1(config-rpl-elseif)# elseif destination in (3001::3:3:3:3/128) then
Node1(config-rpl-elseif)# set srv6-alloc-mode per-vrf
Node1(config-rpl-elseif)# elseif destination in (3001::4:4:4:4/128) then
Node1(config-rpl-elseif)# set srv6-alloc-mode per-ce
Node1(config-rpl-elseif)# else
Node1(config-rpl-else)# drop
Node1(config-rpl-else)# endif
Node1(config-rpl)# end-policy
```

The following example shows how to configure BGP global IPv6 over SRv6 with a route policy to determine the SID allocation mode for given prefix.

```
Node1(config)# router bgp 100
Node1(config-bgp)# address-family ipv6 unicast
Node1(config-bgp-af)# segment-routing srv6
Node1(config-bgp-af-srv6)# alloc mode route-policy set_per_prefix_locator_rpl
```

### Running Configuration

```
route-policy set_per_prefix_locator_rpl
  if destination in (3001::1:1:1:1/128) then
    set srv6-alloc-mode per-vrf locator locator1
  elseif destination in (3001::2:2:2:2/128) then
    set srv6-alloc-mode per-vrf locator locator2
  elseif destination in (3001::3:3:3:3/128) then
    set srv6-alloc-mode per-vrf
  else
    drop
  endif
end-policy
!
router bgp 100
 address-family ipv6 unicast
  segment-routing srv6
   alloc mode route-policy set_per_prefix_locator_rpl
  !
 !
```

Verify that the local and received SIDs have been correctly allocated under BGP IPv6 address family:

```
Node1# show bgp ipv6 unicast local-sids
…
Status codes: s suppressed, d damped, h history, * valid, > best
              i - internal, r RIB-failure, S stale, N Nexthop-discard
Origin codes: i - IGP, e - EGP, ? - incomplete
   Network            Local Sid                                  Alloc mode   Locator
*> 3001::1:1:1:1/128  fc00:8:1:41::                              per-vrf      locator2
*> 3001::2:2:2:2/128  fc00:0:1:41::                              per-vrf      locator1
*> 3001::3:3:3:3/128  fc00:9:1:42::                              per-vrf      locator4
*> 3001::5:5:5:5/128  NO SRv6 Sid                                -            -
* i3008::8:8:8:8/128  NO SRv6 Sid                                -            -
```

```
Node1# show bgp ipv6 unicast received-sids
…
Status codes: s suppressed, d damped, h history, * valid, > best
              i - internal, r RIB-failure, S stale, N Nexthop-discard
Origin codes: i - IGP, e - EGP, ? - incomplete
   Network            Next Hop                            Received Sid
*> 3001::1:1:1:1/128  66.2.2.2                            NO SRv6 Sid
*> 3001::2:2:2:2/128  66.2.2.2                            NO SRv6 Sid
*> 3001::3:3:3:3/128  66.2.2.2                            NO SRv6 Sid
*> 3001::5:5:5:5/128  66.2.2.2                            NO SRv6 Sid
* i3008::8:8:8:8/128  77.1.1.2                            fc00:0:2:41::
```

### Verification

The following figure shows a IPv6 BGP global scenario. The sequence of commands included correspond to router Node1 acting as Ingress PE, and routers Node4 and Node5 acting as Egress PEs.

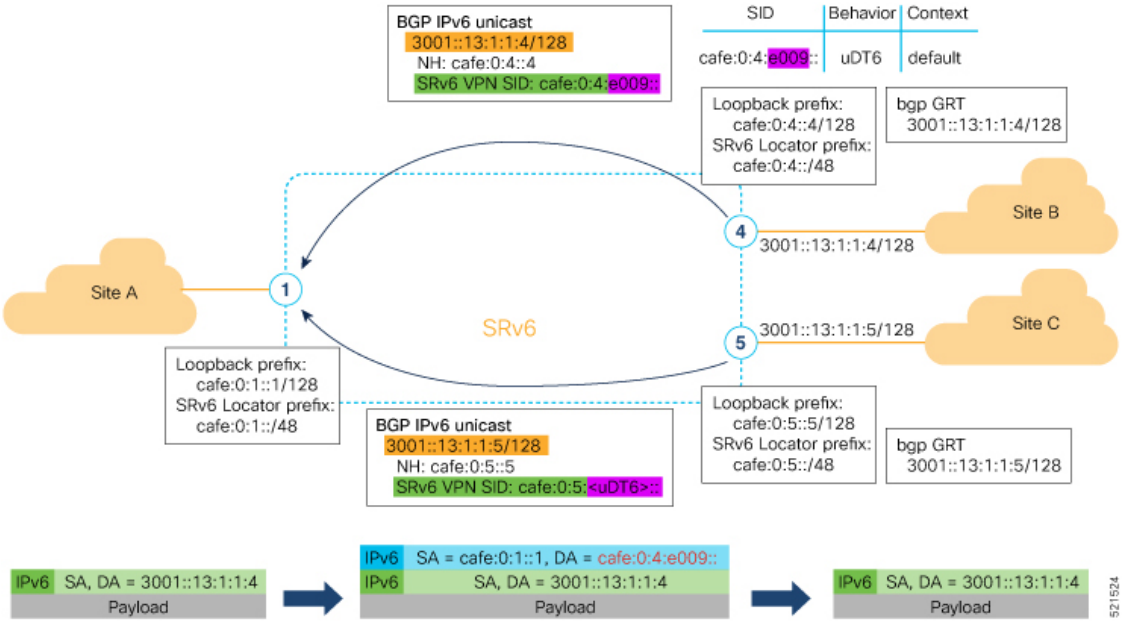


The following examples show how to verify the BGP global IPv6 configuration using the **show bgp ipv6 unicast** commands.

```
Node1# show bgp ipv6 unicast summary
Fri Jan 29 19:48:23.255 UTC
BGP router identifier 10.1.1.1, local AS number 100
BGP generic scan interval 60 secs
Non-stop routing is enabled
BGP table state: Active
Table ID: 0xe0800000   RD version: 4
BGP main routing table version 4
BGP NSR Initial initsync version 2 (Reached)
BGP NSR/ISSU Sync-Group versions 0/0
BGP scan interval 60 secs

BGP is operating in STANDALONE mode.


Process       RcvTblVer   bRIB/RIB   LabelVer  ImportVer  SendTblVer  StandbyVer
Speaker               4           4          4          4           4           0

Neighbor        Spk    AS MsgRcvd MsgSent   TblVer  InQ OutQ  Up/Down  St/PfxRcd
cafe:0:4::4       0   100     137     138        4    0    0 00:35:27          1
cafe:0:5::5       0   100     138     137        4    0    0 00:10:54          1

Node1# show bgp ipv6 unicast
Fri Jan 29 19:49:05.688 UTC
BGP router identifier 10.1.1.1, local AS number 100
BGP generic scan interval 60 secs
Non-stop routing is enabled
BGP table state: Active
Table ID: 0xe0800000   RD version: 4
BGP main routing table version 4
BGP NSR Initial initsync version 2 (Reached)
BGP NSR/ISSU Sync-Group versions 0/0
BGP scan interval 60 secs

Status codes: s suppressed, d damped, h history, * valid, > best
              i - internal, r RIB-failure, S stale, N Nexthop-discard
```

```
Origin codes: i - IGP, e - EGP, ? - incomplete
   Network          Next Hop            Metric LocPrf Weight Path
*> 3001::13:1:1:1/128 ::                      0         32768 i
*>i3001::13:1:1:4/128 cafe:0:4::4             0    100      0 i
*>i3001::13:1:1:5/128 cafe:0:5::5             0    100      0 i

Processed 3 prefixes, 3 paths

Node1# show bgp ipv6 unicast 3001::13:1:1:4/128
Fri Jan 29 19:49:22.067 UTC
BGP routing table entry for 3001::13:1:1:4/128
Versions:
  Process           bRIB/RIB  SendTblVer
  Speaker                 3           3
Last Modified: Jan 29 19:14:13.858 for 00:35:08
Paths: (1 available, best #1)
  Not advertised to any peer
  Path #1: Received by speaker 0
  Not advertised to any peer
  Local
    cafe:0:4::4 (metric 30) from cafe:0:4::4 (10.1.1.4)
      Origin IGP, metric 0, localpref 100, valid, internal, best, group-best
      Received Path ID 0, Local Path ID 1, version 3
      PSID-Type:L3, SubTLV Count:1
       SubTLV:
        T:1(Sid information), Sid:cafe:0:4:e009::, Behavior:62, SS-TLV Count:1
         SubSubTLV:
          T:1(Sid structure):
```

The following examples show how to verify the current routes in the Routing Information Base (RIB):

```
Node1# show route ipv6 3001::13:1:1:4/128
Fri Jan 29 19:53:26.839 UTC

Routing entry for 3001::13:1:1:4/128
  Known via "bgp 100", distance 200, metric 0, type internal
  Installed Jan 29 19:14:13.397 for 00:35:28
  Routing Descriptor Blocks
    cafe:0:4::4, from cafe:0:4::4
      Route metric is 0
  No advertising protos.

Node1# show route ipv6 3001::13:1:1:4/128 detail
Fri Jan 29 19:50:08.601 UTC

Routing entry for 3001::13:1:1:4/128
  Known via "bgp 100", distance 200, metric 0, type internal
  Installed Jan 29 19:14:13.397 for 00:35:55
  Routing Descriptor Blocks
    cafe:0:4::4, from cafe:0:4::4
      Route metric is 0
      Label: None
      Tunnel ID: None
      Binding Label: None
      Extended communities count: 0
      NHID:0x0(Ref:0)
      SRv6 Headend: H.Encaps.Red [f3216], SID-list {cafe:0:4:e009::}
  Route version is 0x1 (1)
  No local label
  IP Precedence: Not Set
  QoS Group ID: Not Set
  Flow-tag: Not Set
  Fwd-class: Not Set
```

```
  Route Priority: RIB_PRIORITY_RECURSIVE (12) SVD Type RIB_SVD_TYPE_LOCAL
  Download Priority 4, Download Version 106
  No advertising protos.
```

The following examples show how to verify the current IPv6 Cisco Express Forwarding (CEF) table:

```
Node1# show cef ipv6 3001::13:1:1:4/128
Fri Jan 29 19:50:29.149 UTC
3001::13:1:1:4/128, version 106, SRv6 Headend, internal 0x5000001 0x40 (ptr 0x78    cd3944)
 [1], 0x0 (0x0), 0x0 (0x888a3a80)
 Updated Jan 29 19:14:13.401
 Prefix Len 128, traffic index 0, precedence n/a, priority 4
   via cafe:0:4::/128, 7 dependencies, recursive [flags 0x6000]
    path-idx 0 NHID 0x0 [0x78cd2a14 0x0]
    next hop cafe:0:4::/128 via cafe:0:4::/48
    SRv6 H.Encaps.Red SID-list {cafe:0:4:e009::}

Node1# show cef ipv6 3001::13:1:1:4/128 detail
Fri Jan 29 19:51:00.920 UTC
3001::13:1:1:4/128, version 106, SRv6 Headend, internal 0x5000001 0x40 (ptr 0x78cd3944)
[1], 0x0 (0x0), 0x0 (0x888a3a80)
 Updated Jan 29 19:14:13.401
 Prefix Len 128, traffic index 0, precedence n/a, priority 4
  gateway array (0x78afe150) reference count 1, flags 0x2010, source rib (7), 0 backups
                [1 type 3 flags 0x48441 (0x78ba99e8) ext 0x0 (0x0)]
  LW-LDI[type=0, refc=0, ptr=0x0, sh-ldi=0x0]
  gateway array update type-time 1 Jan 29 19:14:13.401
 LDI Update time Jan 29 19:14:13.401

  Level 1 - Load distribution: 0
  [0] via cafe:0:4::/128, recursive

   via cafe:0:4::/128, 7 dependencies, recursive [flags 0x6000]
    path-idx 0 NHID 0x0 [0x78cd2a14 0x0]
    next hop cafe:0:4::/128 via cafe:0:4::/48
    SRv6 H.Encaps.Red SID-list {cafe:0:4:e009::}

    Load distribution: 0 1 (refcount 1)

    Hash  OK  Interface                 Address
    0     Y   HundredGigE0/0/0/0        remote
    1     Y   HundredGigE0/0/0/1        remote
```

# SRv6 Services: IPv4 L3VPN Active-Standby Redundancy using Port-Active Mode

The Segment Routing IPv6 (SRv6) Services: IPv4 L3VPN Active-Standby Redundancy using Port-Active Mode feature provides all-active per-port load balancing for multihoming. The forwarding of traffic is determined based on a specific interface rather than per-flow across multiple Provider Edge routers. This feature enables efficient load-balancing and provides faster convergence. In an active-standby scenario, the active PE router is detected using designated forwarder (DF) election by modulo calculation and the interface of the standby PE router brought down. For Modulo calculation, byte 10 of the Ethernet Segment Identifier (ESI) is used.

### Usage Guidelines and Restrictions

- This feature can only be configured for bundle interfaces.

- When an EVPN Ethernet Segment (ES) is configured with port-active load-balancing mode, you cannot configure ACs of that bundle on bridge-domains with a configured EVPN instance (EVI). EVPN Layer 2 bridging service is not compatible with port-active load-balancing.

## SRv6 Services for L3VPN Active-Standby Redundancy using Port-Active Mode: Operation

Under port-active operational mode, EVPN Ethernet Segment (ES) routes are exchanged across BGP for the routers servicing the multihomed ES. Each PE router then builds an ordered list of the IP addresses of all PEs connected to the ES, including itself, and assigns itself an ordinal for its position in the list. The ordinals are used with the modulo calculation to determine which PE will be the Designated Forwarder (DF) for a given ES. All non-DF PEs will take the respective bundles out of service.

In the case of link or port failure, the active DF PE withdraws its ES route. This re-triggers DF election for all PEs that service the ES and a new PE is elected as DF.

## Configure SRv6 Services L3VPN Active-Standby Redundancy using Port-Active Mode

This section describes how you can configure SRv6 services L3VPN active-standby redundancy using port-active mode under an Ethernet Segment (ES).

### Configuration Example

```
/* Configure Ethernet Link Bundles */
Router# configure
Router(config)# interface Bundle-Ether10
Router(config-if)# ipv4 address 10.0.0.2 255.255.255.0
Router(config-if)# ipv6 address 2001:DB8::1
Router(config-if)# lacp period short
Router(config-if)# mac-address 1.2.3
Router(config-if)# bundle wait-while 0
Router(config-if)# exit
Router(config)# interface GigabitEthernet 0/2/0/5
Router(config-if)# bundle id 14 mode active
Router(config-if)# commit

/* Configure load balancing. */
Router# configure
Router(config)# evpn
Router(config-evpn)# interface Bundle-Ether10
Router(config-evpn-ac)# ethernet-segment
Router(config-evpn-ac-es)# identifier type 0 11.11.11.11.11.11.11.11.14
Router(config-evpn-ac-es)# load-balancing-mode port-active
Router(config-evpn-ac-es)# commit
!
/* Configure address family session in BGP. */
Router# configure
Router(config)# router bgp 100
Router(config-bgp)# bgp router-id 192.168.0.2
Router(config-bgp)# address-family l2vpn evpn
Router(config-bgp)# neighbor 192.168.0.3
Router(config-bgp-nbr)# remote-as 200
Router(config-bgp-nbr)# update-source Loopback 0
Router(config-bgp-nbr)# address-family l2vpn evpn
Router(config-bgp-nbr)# commit
```

## Running Configuration

```
interface Bundle-Ether14
 ipv4 address 14.0.0.2 255.255.255.0
 ipv6 address 14::2/64
 lacp period short
 mac-address 1.2.3
 bundle wait-while 0
!
interface GigabitEthernet0/2/0/5
 bundle id 14 mode active
!
evpn
 interface Bundle-Ether14
  ethernet-segment
   identifier type 0 11.11.11.11.11.11.11.11.14
   load-balancing-mode port-active
  !
 !
!
router bgp 100
 bgp router-id 192.168.0.2
 address-family l2vpn evpn
 !
 neighbor 192.168.0.3
  remote-as 100
  update-source Loopback0
  address-family l2vpn evpn
  !
 !
!
```

## Verification

Verify the SRv6 services L3VPN active-standby redundancy using port-active mode configuration.

```
/* Verify ethernet-segment details on active DF router */
Router# show evpn ethernet-segment interface Bundle-Ether14 detail
Ethernet Segment Id      Interface                          Nexthops
------------------------ ---------------------------------- --------------------
0011.1111.1111.1111.1114 BE14                               192.168.0.2
                                                            192.168.0.3
    ES to BGP Gates   : Ready
  ES to L2FIB Gates : Ready
  Main port         :
     Interface name : Bundle-Ether14
     Interface MAC  : 0001.0002.0003
     IfHandle       : 0x000041d0
     State          : Up
     Redundancy     : Not Defined
  ESI type          : 0
     Value          : 11.1111.1111.1111.1114
  ES Import RT      : 1111.1111.1111 (from ESI)
  Source MAC        : 0000.0000.0000 (N/A)
  Topology          :
     Operational    : MH
     Configured     : Port-Active
  Service Carving   : Auto-selection
     Multicast      : Disabled
  Peering Details   :
     192.168.0.2 [MOD:P:00]
     192.168.0.3 [MOD:P:00]
```

```
  Service Carving Results:
     Forwarders     : 0
     Permanent      : 0
     Elected        : 0
     Not Elected    : 0
  MAC Flushing mode : STP-TCN
  Peering timer     : 3 sec [not running]
  Recovery timer    : 30 sec [not running]
  Carving timer     : 0 sec [not running]
  Local SHG label   : None
  Remote SHG labels : 0


/* Verify bundle Ethernet configuration on active DF router */
Router# show bundle bundle-ether 14
Bundle-Ether14
  Status:                                    Up
  Local links <active/standby/configured>:   1 / 0 / 1
  Local bandwidth <effective/available>:     1000000 (1000000) kbps
  MAC address (source):                      0001.0002.0003 (Configured)
  Inter-chassis link:                        No
  Minimum active links / bandwidth:          1 / 1 kbps
  Maximum active links:                      64
  Wait while timer:                          Off
  Load balancing:
    Link order signaling:                    Not configured
    Hash type:                               Default
    Locality threshold:                      None
  LACP:                                      Operational
    Flap suppression timer:                  Off
    Cisco extensions:                        Disabled
    Non-revertive:                           Disabled
  mLACP:                                     Not configured
  IPv4 BFD:                                  Not configured
  IPv6 BFD:                                  Not configured

  Port                  Device           State        Port ID         B/W, kbps
  ----------------------  ---------------  -----------  --------------  ----------
  Gi0/2/0/5             Local            Active       0x8000, 0x0003     1000000
      Link is Active



/*  Verify ethernet-segment details on standby DF router */
Router# show evpn ethernet-segment interface bundle-ether 10 detail

Router# show evpn ethernet-segment interface Bundle-Ether24 detail
Ethernet Segment Id      Interface                          Nexthops
------------------------ ---------------------------------- --------------------
0011.1111.1111.1111.1114 BE24                               192.168.0.2
                                                            192.168.0.3
  ES to BGP Gates   : Ready
  ES to L2FIB Gates : Ready
  Main port         :
     Interface name : Bundle-Ether24
     Interface MAC  : 0001.0002.0003
     IfHandle       : 0x000041b0
     State          : Standby
     Redundancy     : Not Defined
  ESI type          : 0
     Value          : 11.1111.1111.1111.1114
  ES Import RT      : 1111.1111.1111 (from ESI)
  Source MAC        : 0000.0000.0000 (N/A)
```

```
  Topology          :
     Operational    : MH
     Configured     : Port-Active
  Service Carving   : Auto-selection
     Multicast      : Disabled
  Peering Details   :
     192.168.0.2 [MOD:P:00]
     192.168.0.3 [MOD:P:00]

  Service Carving Results:
     Forwarders     : 0
     Permanent      : 0
     Elected        : 0
     Not Elected    : 0
  MAC Flushing mode : STP-TCN
  Peering timer     : 3 sec [not running]
  Recovery timer    : 30 sec [not running]
  Carving timer     : 0 sec [not running]
  Local SHG label   : None
  Remote SHG labels : 0

/* Verify bundle configuration on standby DF router */
Router# show bundle bundle-ether 24

Bundle-Ether24
  Status:                                     LACP OOS (out of service)
  Local links <active/standby/configured>:    0 / 1 / 1
  Local bandwidth <effective/available>:      0 (0) kbps
  MAC address (source):                       0001.0002.0003 (Configured)
  Inter-chassis link:                         No
  Minimum active links / bandwidth:           1 / 1 kbps
  Maximum active links:                       64
  Wait while timer:                           Off
  Load balancing:
    Link order signaling:                     Not configured
    Hash type:                                Default
    Locality threshold:                       None
  LACP:                                       Operational
    Flap suppression timer:                   Off
    Cisco extensions:                         Disabled
    Non-revertive:                            Disabled
  mLACP:                                      Not configured
  IPv4 BFD:                                   Not configured
  IPv6 BFD:                                   Not configured

  Port                  Device           State        Port ID         B/W, kbps
  --------------------  ---------------  -----------  --------------  ----------
  Gi0/0/0/4             Local            Standby      0x8000, 0x0002     1000000
      Link is in standby due to bundle out of service state
```

# SRv6 Services: IPv4 L3VPN Active-Active Redundancy

This feature provides active-active connectivity to a CE device in a L3VPN deployment. The CE device can be Layer-2 or Layer-3 device connecting to the redundant PEs over a single LACP LAG port.

Depending on the bundle hashing, an ARP or IPv6 Network Discovery (ND) packet can be sent to any of the redundant routers. As a result, not all entries will exist on a given PE. In order to provide complete awareness, Layer-3 local route learning is augmented with remote route-synchronization programming.

Route synchronization between service PEs is required in order to provide minimum interruption to unicast and multicast services after failure on a redundant service PE. The following EVPN route-types are used for Layer-3 route synchronization:

- EVPN route-type 2 for synchronizing ARP tables
- EVPN route-type 7/8 for synchronizing IGMP JOINS/LEAVES

In a Layer-3 CE scenario, the router that connects to the redundant PEs may establish an IGP adjacency on the bundle port. In this case, the adjacency will be formed to one of the redundant PEs, and IGP customer routes will only be present on that PE. To synchronize Layer-3 customer subnet routes (IP Prefixes), the EVPN route-type 5 is used to carry the ESI and ETAG as well as the gateway address (prefix next-hop address).

**Note** Gratuitous ARP (GARP) or IPv6 Network Advertisement (NA) replay is not needed for CEs connected to the redundant PEs over a single LAG port.

The below configuration enables Layer-3 route synchronization for routes learned on the Ethernet-segment sub-interfaces.

```
evpn
 route-sync vrf default
!
vrf RED
 evi route-sync 10
!
vrf BLUE
 evi route-sync 20
!
```

**Note** EVPN does not support untagged interfaces.

# SRv6 Services: EVPN VPWS — All-Active Multi-Homing

*Table 11: Feature History Table*

| Feature Name | Release | Description |
|---|---|---|
| SRv6 Services: EVPN VPWS — All-Active Multi-Homing (SRv6 Micro SID) | Release 7.3.2 | This feature provides an ELINE (P2P) service with all-active multihoming capability over an SRv6 network.<br>All-Active Multi-Homing enables an operator to connect a customer edge (CE) device to two or more provider edge (PE) devices to provide load balancing and redundant connectivity. With All-Active Multi-Homing, all the PEs can forward traffic to and from the multi-homed device. |

EVPN VPWS All-Active Multi-Homing over SRv6 provides an ELINE (P2P) service with all-active multihoming capability over an SRv6 network.

All-Active Multi-Homing enables an operator to connect a customer edge (CE) device to two or more provider edge (PE) devices to provide load balancing and redundant connectivity. With All-Active Multi-Homing, all the PEs can forward traffic to and from the multi-homed device.

**Note** For information about EVPN VPWS, refer to the "EVPN Virtual Private Wire Service (VPWS)" chapter in the *L2VPN and Ethernet Services Configuration Guide for Cisco ASR 9000 Series Routers*.

### Configuring EVPN VPWS over SRv6

**Note** Complete the steps in Configuring SRv6, on page 26 before performing these steps.

An SRv6 Locator for an EVPN VPWS service can be configured at 3 different levels independently:

- global_locator is the default locator for all EVPN-VPWS services
- evi_locator is applied to all EVPN-VPWS services for the specific EVI
- evi_service_locator is applied to an individual EVI service

When locators are configured at different levels at the same time, the following priority is implemented:

1. evi_service_locator
2. evi_locator
3. global_locator

This example shows how to configure an EVPN VPWS over SRv6 using a global locator for EVPN:

```
evpn
 segment-routing srv6
  locator sample_global_loc

l2vpn
 xconnect group sample_xcg
  p2p sample-vpws-12001-2002
   interface Bundle-Ether12001.2002
   neighbor evpn evi 12001 service 2002 segment-routing srv6
```

This example shows how to configure EVPN VPWS over SRv6 using specific EVI locator:

```
evpn
 evi 11001 segment-routing srv6
  locator sample_evi_loc

l2vpn
 xconnect group sample_xcg
  p2p sample-vpws-11001-2002
   interface Bundle-Ether11001.2002
   neighbor evpn evi 11001 service 2002 segment-routing srv6
```

This example shows how to configure an EVPN VPWS over SRv6 using a locator for an individual EVI service:

```
l2vpn
 xconnect group sample_xcg
  p2p sample-vpws-11001-2001
   interface Bundle-Ether11001.2001
   neighbor evpn evi 11001 service 2001 segment-routing srv6
    locator sample_evi_service_loc
```

### Verification

```
Router# show segment-routing srv6 locator

Name                  ID       Algo  Prefix                    Status   Flags
--------------------  -------  ----  ------------------------  -------  --------
sample_evi_loc        1        128   2001:0:8::/48             Up       U
sample_global_loc     2        0     2001:0:1::/48             Up       U


Router# show segment-routing srv6 sid

*** Locator: 'sample_evi_loc' ***

SID                         Behavior          Context                           Owner
          State  RW
--------------------------  ----------------  ------------------------------
------------------  -----  --
2001:0:8::                  uN (PSP/USD)      'default':8                       sidmgr
          InUse  Y
2001:0:8:e000::             uDX2              11001:2002                        l2vpn_srv6
          InUse  Y
2001:0:8:e002::             uA (PSP/USD)      [BE11, Link-Local]:128            isis-20
          InUse  Y
2001:0:8:e004::             uA (PSP/USD)      [BE60, Link-Local]:128            isis-20
          InUse  Y
2001:0:8:e006::             uA (PSP/USD)      [BE30, Link-Local]:128            isis-20
          InUse  Y
```

```
*** Locator: 'sample_global_loc' ***

2001:0:1::                  uN (PSP/USD)      'default':1                       sidmgr
          InUse  Y
2001:0:1:e001::             uDX2              12001:2002                        l2vpn_srv6
          InUse  Y
2001:0:1:e003::             uA (PSP/USD)      [BE11, Link-Local]:0              isis-20
          InUse  Y
2001:0:1:e005::             uA (PSP/USD)      [BE60, Link-Local]:0              isis-20
          InUse  Y
2001:0:1:e007::             uA (PSP/USD)      [BE30, Link-Local]:0              isis-20
          InUse  Y


Router# show evpn segment-routing srv6 detail

Configured default locator: sample_global_loc
EVIs with unknown locator config: 0
VPWS with unknown locator config: 0

Locator name         Prefix                      OOR      Service count    SID count
------------         ------                      ---      -------------    ---------
sample_evi_loc       2001:0:8::/48               False    1                1
   Configured on EVIs <evi>: 11001
sample_global_loc    2001:0:1::/48               False    1                1
   Default locator


Router# show l2vpn xconnect group sample_xcg detail
Thu Sep  2 14:39:22.575 UTC


Group sample_xcg, XC sample-vpws-11001-2002, state is up; Interworking none
  AC: Bundle-Ether11001.2002, state is up
    Type VLAN; Num Ranges: 1
    Rewrite Tags: []
    VLAN ranges: [2002, 2002]
    MTU 1504; XC ID 0xc0002ee8; interworking none
    Statistics:
      packets: received 0, sent 0
      bytes: received 0, sent 0
      drops: illegal VLAN 0, illegal length 0
  EVPN: neighbor ::ffff:10.0.0.1, PW ID: evi 11001, ac-id 2002, state is up ( established
)
    XC ID 0xa0001f47
    Encapsulation SRv6
    Encap type Ethernet
    Ignore MTU mismatch: Enabled
    Transmit MTU zero: Disabled
    Reachability: Up

      SRv6              Local                        Remote
      ----------------  ---------------------------- --------------------------
      uDX2              2001:0:8:e000::              2001:0:3:e000::
      AC ID             2002                         2002
      MTU               1518                         1518
      Locator           sample_evi_loc               N/A
      Locator Resolved  Yes                          N/A
      SRv6 Headend      H.Encaps.L2.Red              N/A
    Statistics:
      packets: received 0, sent 0
      bytes: received 0, sent 0
```

```
Group sample_xcg, XC sample-vpws-12001-2002, state is up; Interworking none
  AC: Bundle-Ether12001.2002, state is up
    Type VLAN; Num Ranges: 1
    Rewrite Tags: []
    VLAN ranges: [2002, 2002]
    MTU 1504; XC ID 0xc0002eea; interworking none
    Statistics:
      packets: received 0, sent 0
      bytes: received 0, sent 0
      drops: illegal VLAN 0, illegal length 0
  EVPN: neighbor ::ffff:10.0.0.2, PW ID: evi 12001, ac-id 2002, state is up ( established
)
    XC ID 0xa0001f49
    Encapsulation SRv6
    Encap type Ethernet
    Ignore MTU mismatch: Enabled
    Transmit MTU zero: Disabled
    Reachability: Up

      SRv6              Local                        Remote
      ----------------  ---------------------------- --------------------------
      uDX2              2001:0:1:e001::              2001:0:2:e001::
      AC ID             2002                         2002
      MTU               1518                         1518
      Locator           sample_global_loc            N/A
      Locator Resolved  Yes                          N/A
      SRv6 Headend      H.Encaps.L2.Red              N/A
    Statistics:
      packets: received 0, sent 0
      bytes: received 0, sent 0
```

# SRv6-Services: EVPN ELAN Layer 2 Gateway With Automated Steering To Flexible Algorithm Paths

*Table 12: Feature History Table*

| Feature Name | Release Information | Feature Description |
|---|---|---|
| SRv6-Services: EVPN ELAN Layer 2 Gateway With Automated Steering To Flexible Algorithm Paths | Release 7.5.2 | This feature builds upon EVPN BGP signaling to provide Emulated Local Area Network (ELAN) multipoint-to-multipoint Ethernet services over an SRv6-based network.<br><br>You can enable automated steering of EVPN ELAN traffic into the path associated with a best-effort or Flex- Algorithm locator.<br><br>This feature combines the benefits of EVPN ELAN service and SRv6 Micro-SIDs.<br><br>For this feature, the **segment-routing srv6** option was added to the **evi** command:<br><br>evi (bridge-domain) |

You can transport EVPN ELAN bridged unicast and broadcast, unknown unicast, and multicast (BUM) traffic over an SRv6 network in the Micro-SID format. Relevant SRv6 headend and endpoint definitions are noted below:

- **H.Encaps.L2.Red**: This headend router operation involves reduced encapsulation of Layer 2 or Ether frames using an SRv6 Policy.
- **uDT2U**: This endpoint router operation involves traffic decapsulation and unicast MAC L2 table lookup. This is used for the EVPN bridging unicast traffic use case.
- **uDT2M**: This endpoint router operation involves traffic decapsulation and L2 table flooding. This is used for the EVPN bridging BUM traffic with ESI filtering use case.

**Note** For more information on SRv6 headend and endpoint behaviors, refer to Segment Routing over IPv6 Overview.

The following topology is used to explain this feature.

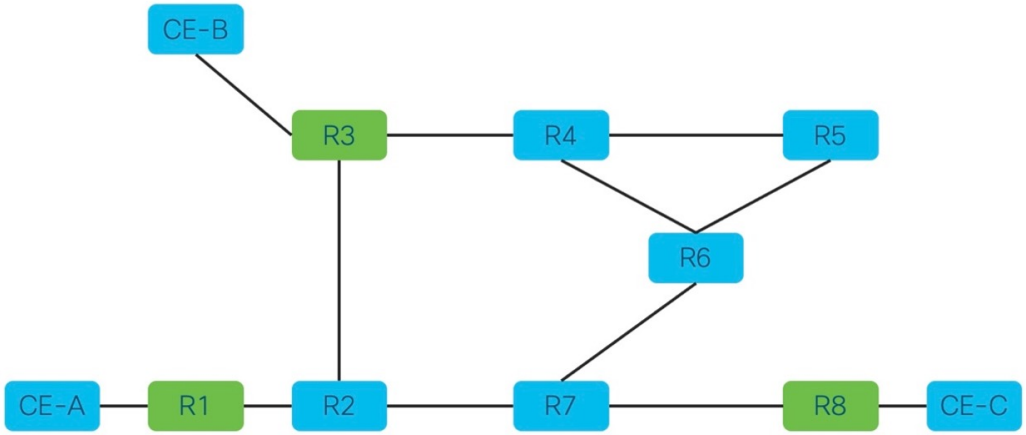


Topology pointers:

- Customer edge (CE) devices send traffic between each other over the SRv6 network. The CE devices are CE-A, CE-B, and CE-C.
- The SRv6 network devices transport customer traffic, and they are R1, R2 .. till R8.
- The provider edge (PE) devices, R1, R3 and R8, are displayed in green. The SRv6 EVPN configurations must be enabled on the PE devices since they participate in the EVPN EVI.

This is a high-level overview of the traffic flow from CE-A to CE-C:

1. CE-A sets the source and destination addresses of the L2 frame and sends it to the connected PE device, R1.
2. R1 looks up the destination MAC address in the frame. Based on its forwarding table, R1 performs an H.Encaps.L2.Red operation and adds the destination DT2U SRv6 SID (say, fccc:ccc1:a1:e000::) to the packet.
3. From R1, traffic is sent over the SRv6 network to destination PE device R8.
4. When R8 receives the traffic, it performs the uDT2U function - It decapsulates the packet, performs a destination MAC address lookup in its forwarding table, and sends the frame through the local interface to CE-C.

### Guidelines and Limitations

- For transporting BUM traffic, the BGP Route Reflector device should have an IOS XR release version 7.5.2 or later.
- For devices with Cisco ASR 9000 High Density 100GE Ethernet line cards, enable the **hw-module l3 feature ler disable** and **hw-module l3 feature lsr disable** commands.
- For faster convergence when transporting BUM traffic on Cisco ASR 9000 devices with multiple line cards, enable the **flood mode resilience-optimized** command in the L2VPN bridge-domain configuration mode.

### Configure SRv6 EVPN Bridging

Enable the following configurations on the PE routers R1, R3 and R8 since they participate in the EVPN EVI.

**Note** Complete the steps in Segment Routing over IPv6 Overview before performing these steps.

#### Associate SRv6 with EVPN

```
Router# configure terminal
Router(config)# evpn
```

Enable SRv6 under the EVPN mode and associate a global locator (**sample**, in this case) with EVPN.

```
Router(config-evpn)# segment-routing srv6
Router(config-evpn-srv6)# locator sample
Router(config-evpn-srv6)# exit
```

Associate an EVI-specific locator (**sample_evi_loc**) with EVI 1.

```
Router(config-evpn)# evi 1 segment-routing srv6
Router(config-evpn-instance)# locator sample_evi_loc
Router(config-evpn-instance)# commit
```

#### Associate SRv6 with L2VPN

Associate the sub-interface to the bridge domain:

```
Router(config)# l2vpn
Router(config-l2vpn)# bridge group bg1
Router(config-l2vpn-bg)# bridge-domain bd1
Router(config-l2vpn-bg-bd)# interface Hu0/0/0/0.1
Router(config-l2vpn-bg-bd-ac)# exit
```

Enable the **evi 1 segment-routing srv6** command under L2VPN bridge domain **bd1**.

```
Router(config-l2vpn-bg-bd)# evi 1 segment-routing srv6
Router(config-l2vpn-bg-bd-evi-srv6)# commit
```

When transporting BUM traffic on a device with multiple line cards, enable the **flood mode resilience-optimized** command for faster network convergence.

```
Router(config)# l2vpn
Router(config-l2vpn)# bridge group bg11001
Router(config-l2vpn-bg)# bridge-domain elan-11001-2001
Router(config-l2vpn-bg-bd)# flood mode resilience-optimized
Router(config-l2vpn-bg-bd)# commit
```

### Verification

In this sample output, SRv6 EVPN ELAN traffic unicast and multicast SID information is displayed.

```
Router# show evpn evi vpn-id 1 detail

VPN-ID     Encap      Bridge Domain                Type
---------- ---------- ---------------------------- -----------------
1          SRv6       bd1                          EVPN

..
   Stitching: Regular
   Unicast SID:  fccc:ccc1:a1:e000::
   Multicast SID: fccc:ccc1:a1:e001::
..
```

In this sample output, EVI 1 details, including the corresponding SID and EVPN MAC address details are displayed.

```
Router# show evpn evi vpn-id 1 mac

VPN-ID    Encap   MAC            IP        Nexthop      Label    SID
                  address        address
-----     ------ --------       --------   -------      -----         ---

1         SRv6    0010.3000.01d0  ::       Hu0/0/0/0.1    0     fccc:ccc1:a1:e000::
```

In this sample output, for the specified EVI and EVPN MAC address, SRv6 EVPN ELAN traffic details are displayed.

```
Router# show evpn evi vpn-id 1 mac 0010.3000.01d0 detail

VPN-ID Encap       MAC            IP       Nexthop      Label         SID
                   address        address
------ -----       ------         ------  -------       -----         ---
1     SRv6   ee03.0500.0130  ::     192.168.0.3  IMP-NULL fccc:ccc1:a3:e000::

   Ethernet Tag                            : 0
   Multi-paths Resolved                    : True
   Multi-paths Internal label              : None
   Local Static                            : No
   Remote Static                           : Yes
   Local Ethernet Segment                  : N/A
   Remote Ethernet Segment                 : 0100.0205.acce.5500.0500
   Local Sequence Number                   : N/A
   Remote Sequence Number                  : 0
   Local Encapsulation                     : N/A
   Remote Encapsulation                    : SRv6
   Local E-Tree                            : Root
   Remote E-Tree                           : Root
   Remote matching E-Tree RT               : No
   Local AC-ID                             : 0x0
   Remote AC-ID                            : 0x13
```

In this sample output, for the specified EVI, multicast SID details are displayed.

```
Router# show evpn evi vpn-id 1 inclusive-multicast detail

VPN-ID        Encap           EtherTag             Originating IP
---           ----            -------              -------------
1            SRv6       0                    192.168.0.1
..
          TEPid: 0xffffffff
  PMSI Type: 6
  Nexthop: ::
  SR-TE Info: N/A
     SID: fccc:ccc1:a1:e001::
  Source: Local
  E-Tree: Root
..
```

In this sample output, for the specified MAC address, bridge domain information is displayed.

```
Router# show l2route evpn mac all | i ee03.0500.0130

Topo ID   Mac Address             Producer     Next Hop(s)
------    -----------             -------      -------------
1         ee03.0500.0130    L2VPN        ::ffff:10.0.0.10/IID/V6, N/A
```

In this sample output, SRv6 network locator and corresponding SID information are displayed.

**uDT2U** and **uDT2M** refer to SRv6 network endpoint operations. **uDT2U** indicates SRv6 traffic decapsulation, wherein EVPN bridged unicast traffic is forwarded out of the SR network. **uDT2M** indicates SRv6 traffic decapsulation, wherein EVPN bridged multicast traffic is forwarded out of the SR network.

```
Router# show segment-routing srv6 sid

*** Locator: 'sample_evi_loc' ***

SID                     Behavior      Context        Owner        State   RW
---                     --------      -------        -----        -----   --
fccc:ccc1:a1::          uN(PSP/USD)  'default':161   sidmgr        InUse   Y
fccc:ccc1:a1:e000::     uDT2U   7:0            l2vpn_srv6    InUse   Y
fccc:ccc1:a1:e001::     uDT2M   7:0            l2vpn_srv6    InUse   Y
```

In this sample output, CEF information is displayed, including SRv6 network endpoint details. **uDT2U** is an SRv6 network endpoint operation wherein SRv6 traffic is decapsulated and EVPN bridged unicast traffic is forwarded out of the SR network.

```
Router# show cef ipv6 fccc:ccc1:a1:e000:: detail

fccc:ccc1:a1:e000::, version 14, SRv6 Endpoint uDT2U, internal 0x1000001
0x0 (ptr 0x8ba26050) [1], 0x400 (0x8bbf7b58), 0x0 (0x92396138)

 Prefix Len 64, traffic index 0, precedence n/a, priority 0
  gateway array (0x8ba33e90) reference count 4, flags 0x0, source rib (7), 0 backups
                [5 type 3 flags 0x8401 (0x8baf8ca8) ext 0x0 (0x0)]

  LW-LDI[type=3, refc=1, ptr=0x8bbf7b58, sh-ldi=0x8baf8ca8]
  gateway array update type-time 1 Sep  8 11:46:51.242

 LDI Update time Sep  8 11:46:51.303
 LW-LDI-TS Sep  8 11:46:51.380
   via ::/128, 0 dependencies, weight 0, class 0 [flags 0x0]
    path-idx 0 NHID 0x0 [0x8afdf120 0x0]
    next hop ::/128
    XConnect ID: 0x80000003
    Bridge ID: 0x1
    Shg ID: 0x1

    Load distribution: 0 (refcount 5)

    Hash  OK  Interface                 Address
    0     Y   recursive                 Lookup in table
```

In the following examples, SRv6 EVPN ELAN traffic-related IID information is displayed.

```
Router# show evpn internal-id vpn-id 3001 detail

VPN-ID  Encap  Ethernet Segment Id         EtherTag     Internal ID
-----   ------ -------------------------- ----------   -----------
1       SRv6   0001.0001.0001.1501.0015    0         ::ffff:10.0.0.4

   Summary pathlist:

 0x05000002 (P) 192.168.0.3 fccc:ccc1:a3:e000::
 0x05000002 (P) 192.168.0.3 fccc:ccc1:a4:e000::

Router# show cef vrf **iid ipv6 ::ffff:10.0.0.4

::ffff:10.0.0.4/128, version 39, SRv6 Headend, IID (EVPN-MH), internal 0x1000001 0x0 (ptr
0x8ba21798) [3], 0x0 (0x0), 0x0 (0x923967b0)
 Updated Sep  8 18:01:06.495
 Prefix Len 128, traffic index 0, precedence n/a, priority 0
  gateway array (0x8ba36018) reference count 1, flags 0x2010, source rib (7), 0 backups
```

```
               [1 type 3 flags 0x48441 (0x8baf9a28) ext 0x0 (0x0)]
  LW-LDI[type=0, refc=0, ptr=0x0, sh-ldi=0x0]
  gateway array update type-time 1 Sep  8 18:01:06.495
 LDI Update time Sep  8 18:01:06.495

  Level 1 - Load distribution: 0
  [0] via fccc:ccc1:a3::/128, recursive

   via fccc:ccc1:a3:e000::/128, 10 dependencies, recursive [flags 0x0]
    path-idx 0 NHID 0x0 [0x8ba24e78 0x0]
    next hop VRF - 'default', table - 0xe0800000
    next hop fccc:ccc1:a3::/128 via fccc:ccc1:a3::/48
    SRv6 H.Encaps.L2.Red SID-list { fccc:ccc1:a3:e000::}

    Load distribution: 0 (refcount 1)

    Hash  OK  Interface        Address
    0     Y   Hu0/0/0/0        remote

   via fccc:ccc1:a4::/128, 10 dependencies, recursive [flags 0x100]
    path-idx 0 NHID 0x0 [0x8ba24e78 0x0]
    next hop VRF - 'default', table - 0xe0800000
    next hop fccc:ccc1:a4::/128 via fccc:ccc1:a4::/48
    SRv6 H.Encaps.L2.Red SID-list {fccc:ccc1:a4:e000::}
```

In this sample output, SRv6 EVPN ELAN traffic-related IID information is displayed.

```
Router# show rib ipv6 iid

IID         Prefix                Context             Owner           State      RW
-------     ------                -------             -------         -----      --
0xa000001 ::ffff:10.0.0.1
[EVPN-ELAN:evi=7:esi=8300.fccc.ccc1.00a4.0000:nh=fccc:ccc1:a4:::eth_tag=0:type=0:encap=255:opaque=0]

                                                        l2vpn_iid        InUse      Y

0xa000002 ::ffff:10.0.0.2
[EVPN-ELAN:evi=8:esi=8300.fccc.ccc1.00a4.0000:nh=fccc:ccc1:a4:::eth_tag=0:type=0:encap=255:opaque=0]

                                                        l2vpn_iid        InUse      Y

0xa000003 ::ffff:10.0.0.3
[EVPN-ELAN:evi=9:esi=8300.fccc.ccc1.00a4.0000:nh=fccc:ccc1:a4:::eth_tag=0:type=0:encap=255:opaque=0]

                                                        l2vpn_iid        InUse      Y
```

# SRv6/MPLS L3 Service Interworking Gateway

*Table 13: Feature History Table*

| Feature Name | Release | Description |
|---|---|---|
| SRv6/MPLS L3 Service Interworking Gateway (SRv6 Micro-SID) | Release 7.3.2 | This feature enables you to extend L3 services between MPLS and SRv6 domains by providing service continuity on the control plane and data plane.<br>This feature allows for SRv6 L3VPN domains to interwork with existing MPLS L3VPN domains. The feature also allows a way to migrate from MPLS L3VPN to SRv6 L3VPN. |

SRv6/MPLS L3 Service Interworking Gateway enables you to extend L3 services between MPLS and SRv6 domains by providing service continuity on the control plane and data plane.

This feature allows for SRv6 L3VPN domains to interwork with existing MPLS L3VPN domains. The feature also allows a way to migrate from MPLS L3VPN to SRv6 L3VPN.

The SRv6/MPLS L3 Service Interworking Gateway provides both transport and service termination at the gateway node. The gateway generates both SRv6 VPN SIDs and MPLS VPN labels for all prefixes under the VRF configured for re-origination. The gateway supports traffic forwarding from MPLS domain to SRv6 domain by popping the MPLS VPN label, looking up the destination prefix, and pushing the appropriate SRv6 encapsulation. From SRv6 domain to MPLS domain, the gateway removes the outer IPv6 header, looks up the destination prefix, and pushes the VPN and next-hop MPLS labels.

VRFs on the gateway node are configured with 2 sets of route targets (RTs):

- MPLS L3VPN RTs
- SRv6 L3VPN RTs (called *stitching RTs*)

The gateway performs the following actions:

- Imports service routes received from one domain (MPLS or SRv6)
- Re-advertises exported service routes to the other domain (next-hop-self)
- Stitches the service on the data plane (uDT4/H.Encaps.Red ↔ service label)

### SRv6/MPLS L3 Service Interworking Gateway Scenarios

The following scenario is used to describe the gateway functionality:

- Node 1 is an L3VPN PE in the MPLS domain with an SR prefix SID label of 16001 for its Loopback interface 10.1.1.1/32.

- Node 2 is the SRv6/MPLS L3 Service Interworking Gateway. In the MPLS domain, it has an SR prefix SID label of 16002 for its Loopback interface 10.1.1.2/32. In the SRv6 domain, it has an SRv6 locator of B:0:2::/48 and Loopback interface B:0:2::2/128.
- Node 3 is an L3VPN PE in the SRv6 domain with SRv6 locator of B:0:3::/48 and Loopback interface B:0:3::3/128.

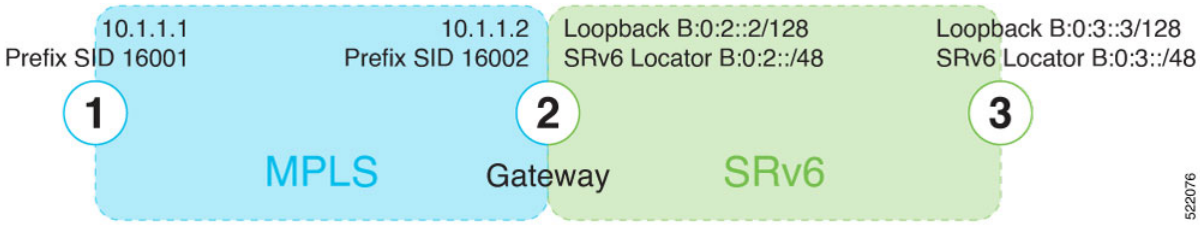


**Scenario 1: SRv6-to-MPLS Control-Plane Direction/MPLS-to-SRv6 Data-Plane Direction**

The figure below describes the associated control-plane behaviors in the SRv6-to-MPLS direction for traffic in the MPLS-to-SRv6 data-plane direction.

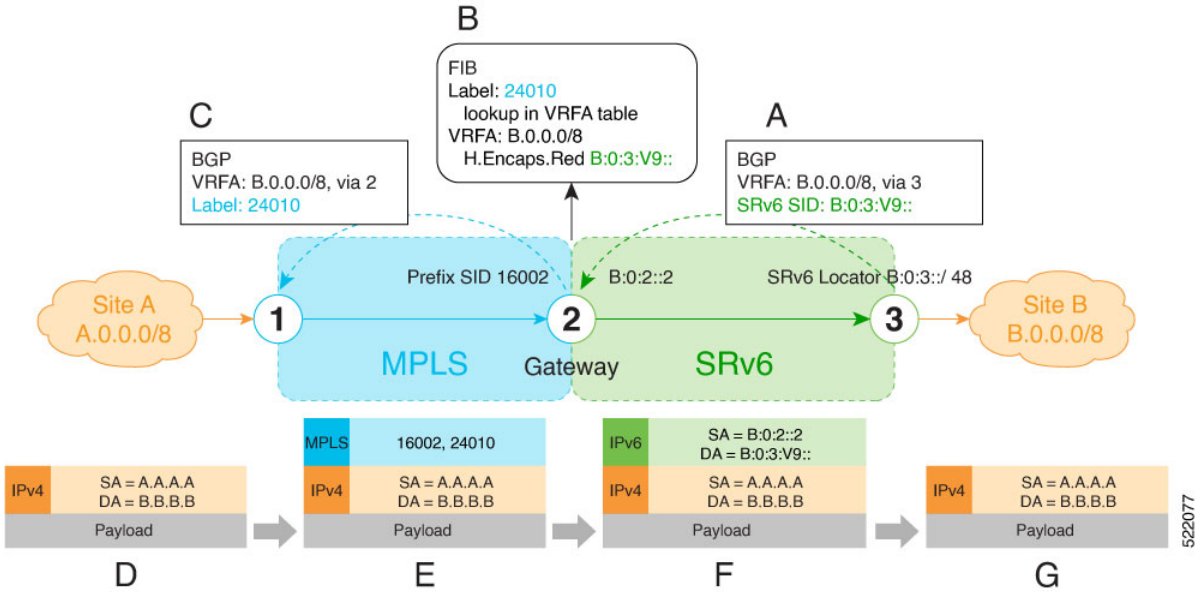


**A**. Node 3 advertises a BGP L3VPN update for prefix B.0.0.0/8 with RD corresponding to VRFA, including the SRv6 VPN SID (B:0:3:V9::) assigned to this VRF, in the SRv6 domain.

**Note** SRv6 uDT4 function value "V9" is not a valid hex number, however it is used for illustration purposes to remind you of its connection to a VRF.

**B**. Node 2 (gateway) imports the BGP L3VPN update and programs its FIB:

- MPLS label 24010 is allocated for VRFA

- Prefix B.0.0.0/8 is programmed with an "SR Headend Behavior with Reduced Encapsulation in an SR Policy" function (H.Encaps.Red) of B:0:3:V9::

**Note** The gateway follows per-VRF label and per-VRF SID allocation methods.

**C**. Node 2 re-originates a BGP L3VPN update for the same prefix, including the MPLS VPN label (24010) allocated for the VRF, in the MPLS domain.

**D**. Site A sends traffic to an IPv4 prefix (B.B.B.B) of Site B

**E**. Node 1 encapsulates incoming traffic with the MPLS VPN label (24010) and the prefix SID MPLS label (16002) of the BGP next-hop (Node 2).

**F**. Node 2 performs the following actions:

- Pops the MPLS VPN label and looks up the destination prefix
- Encapsulates the payload in an outer IPv6 header with destination address (DA) equal to the H.Encaps.Red function (B:0:3:V9::)

**G**. Node 3 removes the outer IPv6 header, looks up the payload destination address (B.B.B.B), and forwards to Site B.

#### Scenario 2: MPLS-to-SRv6 Control-Plane Direction/SRv6-to-MPLS Data-Plane Direction

The figure below describes the associated control-plane behaviors in the MPLS-to-SRv6 direction for traffic in the SRv6-to-MPLS data-plane direction.

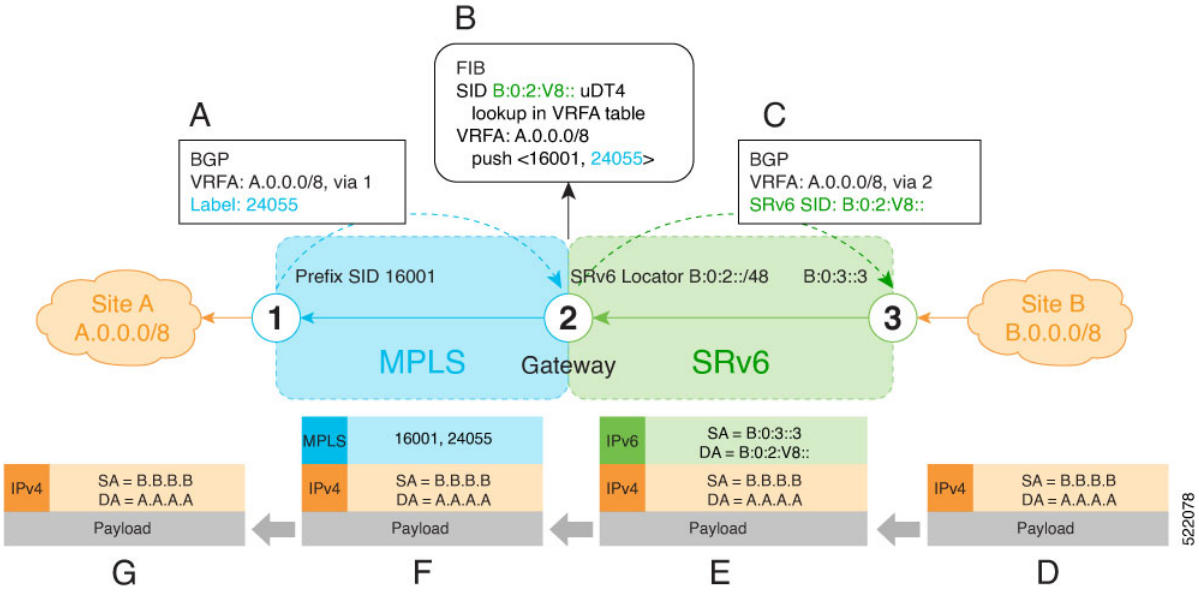


**A**. Node 1 advertises a BGP L3VPN update for prefix A.0.0.0/8 with RD corresponding to VRFA, including the MPLS VPN label (24055) assigned to this VRF, in the MPLS domain.

**B**. Node 2 (gateway) imports the BGP L3VPN update and programs its FIB:

- Prefix A.0.0.0/8 is programmed to impose an MPLS VPN label (24055) and the prefix SID MPLS label (16001) of the BGP next-hop (Node 1)
- "Endpoint with decapsulation and IPv4 table lookup" function (uDT4) of B:0:2:V8:: is allocated to VRFA

**Note** SRv6 uDT4 function value "V8" is not a valid hex number, however it is used for illustration purposes to remind you of its connection to a VRF.

**Note** The gateway follows per-VRF label and per-VRF SID allocation methods.

**C**. Node 2 re-originates a BGP L3VPN update for the same prefix, including the uDT4 function (B:0:2:V8::) allocated for the VRF, in the SRv6 domain.

**D**. Site B sends traffic to an IPv4 prefix (A.A.A.A) of Site A.

**E**. Node 3 Encapsulates the payload in an outer IPv6 header with destination address (DA) equal to the uDT4 function (B:0:2:V8::).

**F**. Node 2 performs the following actions:

- Removes the outer IPv6 header and looks up the destination prefix
- Pushes the MPLS VPN label (24055) and the prefix SID MPLS label (16001) of the BGP next-hop (Node 1)

**G**. Node 1 pops the MPLS VPN label, looks up the payload destination address (A.A.A.A), and forwards to Site A.

### Example

Leveraging the topology described in the above use-case, this example shows the SRv6/MPLS L3 Service Interworking Gateway configuration required at Node 2.

The following configuration shows how to enable SRv6 with locator and configure encapsulation parameters:

```
segment-routing
 srv6
  encapsulation
   source-address B:0:2::2
  !
  locators
   locator LOC1
    prefix B:0:2::/48
   !
  !
 !
!
```

The following configuration shows how to configure a VPNv4 VRF with the following route targets (RTs):

- 1111:1, RT used for MPLS L3VPN
- 2222:1, RT used for SRv6 L3VPN (stitching RT)

```
vrf ACME
 address-family ipv4 unicast
  import route-target
   1111:1
   2222:1 stitching
  !
  export route-target
   1111:1
   22222:1 stitching
  !
 !
!
```

The following configuration shows how to configure SRv6/SRv6 VPNs under BGP:

```
router bgp 100
 segment-routing srv6
  locator LOC1
 !
 neighbor 10.1.1.1
  address-family vpnv4 unicast
   import re-originate stitching-rt
   route-reflector-client
   advertise vpnv4 unicast re-originated
 !
 neighbor B:0:3::1
  address-family vpnv4 unicast
   import stitching-rt re-originate
   route-reflector-client
   encapsulation-type srv6
   advertise vpnv4 unicast re-originated stitching-rt
 !
 vrf ACME
  address-family ipv4 unicast
   enable label-mode
   segment-routing srv6
```

# SRv6/MPLS Dual-Connected PE

*Table 14: Feature History Table*

| Feature Name | Release | Description |
|---|---|---|
| SRv6/MPLS Dual-Connected PE (SRv6 Micro SID) | Release 7.3.2 | This feature allows a PE router to support IPv4 L3VPN services for a given VRF with both MPLS and SRv6. This is MPLS and SRv6 L3VPNv4 co-existence scenario and is sometimes referred to as dual-connected PE. |

A PE router can support IPv4 L3VPN service for a given VRF with both MPLS and SRv6. This is MPLS and SRv6 L3VPNv4 co-existence scenario and is sometimes referred to as dual-connected PE.

In the figure below, node 2 is a dual-connected PE to Site C, providing:

- MPLS/IPv4 L3VPN between Site A and Site C
- SRv6/IPv4 L3VPN between Site B and Site C

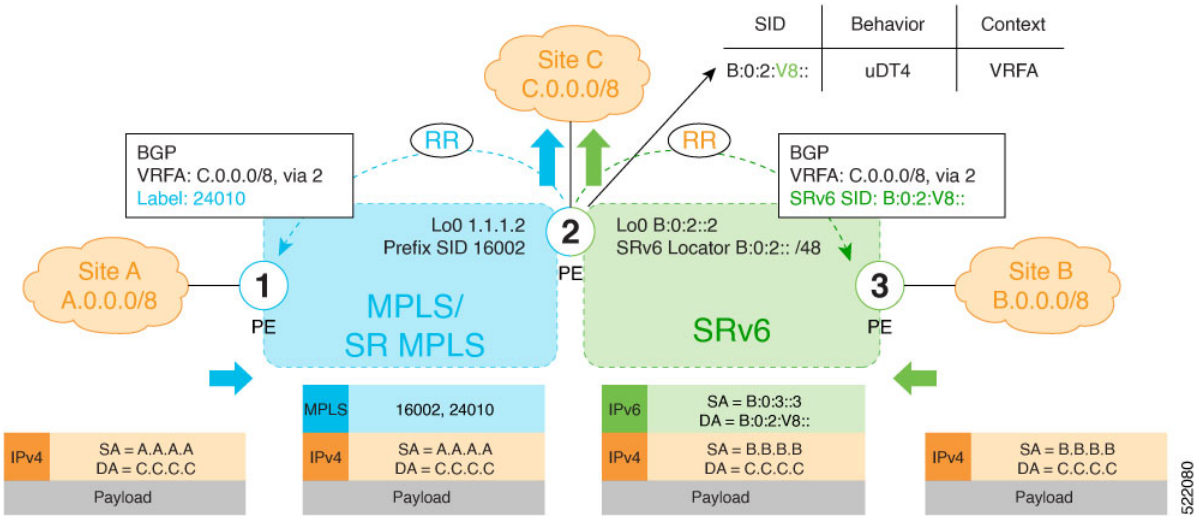


## Configure BGP to Support Dual-Mode

### Enable MPLS Label Allocation

Use the **router bgp** *as-number* **vrf** *WORD* **address-family ipv4 unicast mpls alloc enable** command under the VRF address-family to enable per-prefix mode for MPLS labels. Additionally, use the **router bgp** *as-number* **vrf** *WORD* **address-family ipv4 unicast label mode** {**per-ce** | **per-vrf**} command to choose the type of label allocation.

```
Router(config)# router bgp 100
Router(config-bgp)# vrf blue
Router(config-bgp-vrf)# rd 1:10
Router(config-bgp-vrf)# address-family ipv4 unicast
Router(config-bgp-vrf-af)# mpls alloc enable
Router(config-bgp-vrf-af)# label mode per-ce
Router(config-bgp-vrf-af)# segment-routing srv6
Router(config-bgp-vrf-af-srv6)# alloc mode per-ce
Router(config-bgp-vrf-af-srv6)# exit
Router(config-bgp-vrf-af)# exit
Router(config-bgp-vrf)# exit
Router(config-bgp)#
```

### Configure Encaps on Neighbor to Send the SRv6 SID Toward the SRv6 Dataplane

By default, if a VRF prefix has both an MPLS label and an SRv6 SID, the MPLS label is sent when advertising the prefix to the PE. To advertise a VRF prefix with an SRv6 SID to an SRv6 session, use the **encapsulation-type srv6** command under the neighbor VPN address-family.

```
Router(config-bgp)# neighbor 192::6
Router(config-bgp-nbr)# remote-as 1
Router(config-bgp-nbr)# address-family ipv4 unicast
Router(config-bgp-nbr-af)# encapsulation-type srv6
Router(config-bgp-nbr-af)# exit
```

### Running Config

```
router bgp 100
 neighbor 192::6
  remote-as 1
  address-family ipv4 unicast
   encapsulation-type srv6
```

```
  !
 !
 vrf blue
  rd 1:10
  address-family ipv4 unicast
   mpls alloc enable
   label mode per-ce
   segment-routing srv6
    alloc mode per-ce
   !
  !
 !
!
```

# SRv6 Provider Edge (PE) Lite Support

*Table 15: Feature History Table*

| Feature Name | Release | Description |
|---|---|---|
| SRv6 Provider Edge (PE) Lite | Release 7.8.1 | This feature provides VPN de-multiplexing-only behaviors (End.DT4/DT6/DT46) at an SRv6 PE node. This allows for a lightweight-PE implementation (no VPN encapsulation) that steers SRv6-encapsulated traffic across an SR-MPLS backbone after performing a VPN lookup. |

SRv6 Provider Edge (PE) Lite leverages SRv6 programmability (SRv6 SID as a service ID) to steer traffic across SR MPLS (non-SRv6) backbone.

Service traffic is encapsulated with an explicit SRv6 End.DT46 SID in ingress PE for a VRF.

**Note** See Configuring Explicit End.DT46 SRv6 SIDs, on page 41 for information about explicit End.DT46 SRv6 SIDs.

When traffic arrives at the ingress PE, it performs SRv6 Endpoint Behaviors.

The backbone leverages MPLS L3VPN and SR-TE MPLS (with route coloring and Automated Steering) to transport the traffic to the egress nodes in the backbone via different explicitly specified SLA paths using an SR-TE policy.

### Use Case

The figure below shows a use case where inter-data-center traffic is encapsulated in SRv6 (IP-in-IPv6) and is carried over IP-only metro domains and then over an SR-MPLS backbone.

*Figure 10: Example Topology*

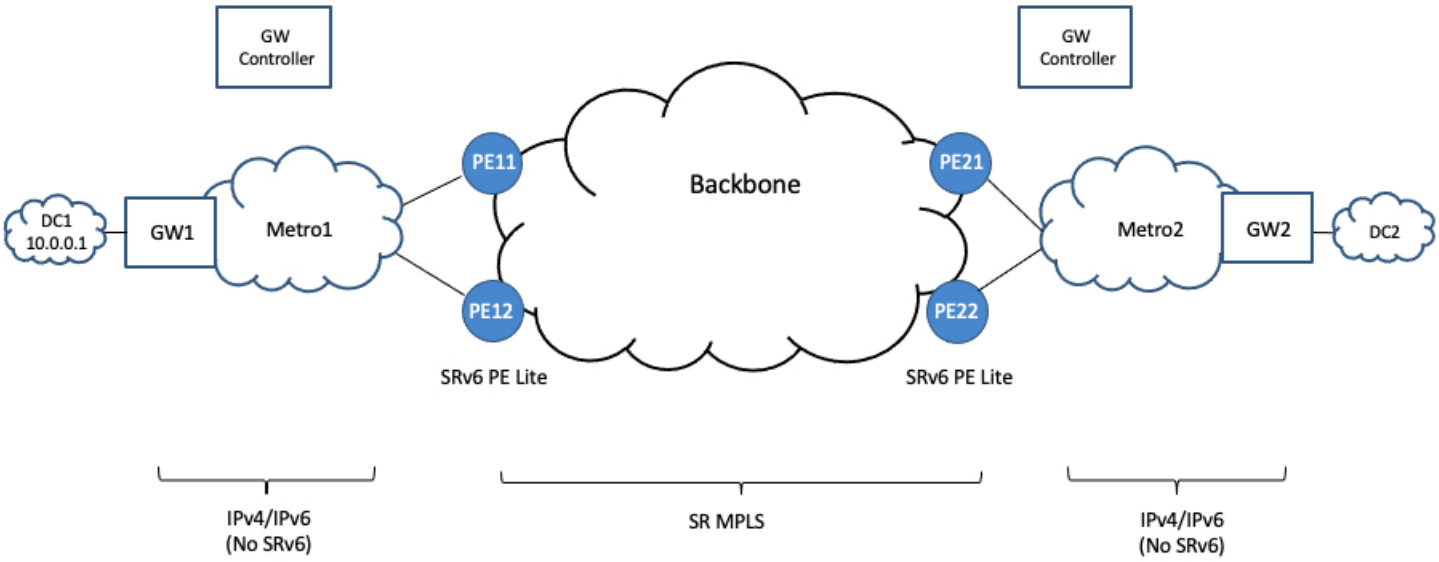


Data center gateways (GW1 and GW2) perform IP-in-IPv6 encapsulation where the outer IPv6 destination address represents an SRv6 network program that leads traffic to the SRv6 PE lite nodes (PE11 and PE12). This outer IPv6 destination address is determined by the gateway controller to provide a desired transport SLA to an application over the backbone. The SRv6 PE lite nodes remove the SRv6 encapsulation and perform a lookup of the original encapsulated packet's IP destination address in the routing table of an MPLS VPN built over the backbone. The prefixes in the VPN table are associated with different transport SLAs (for example, best-effort or minimum delay). These prefixes can be steered over the native SR LSP or an SR-TE policy path, according to automated steering (AS) principles.

*Figure 11: SRv6 Locator/Functions and SR-MPLS Prefix SIDs (Traffic Direction – DC1 to DC2)*

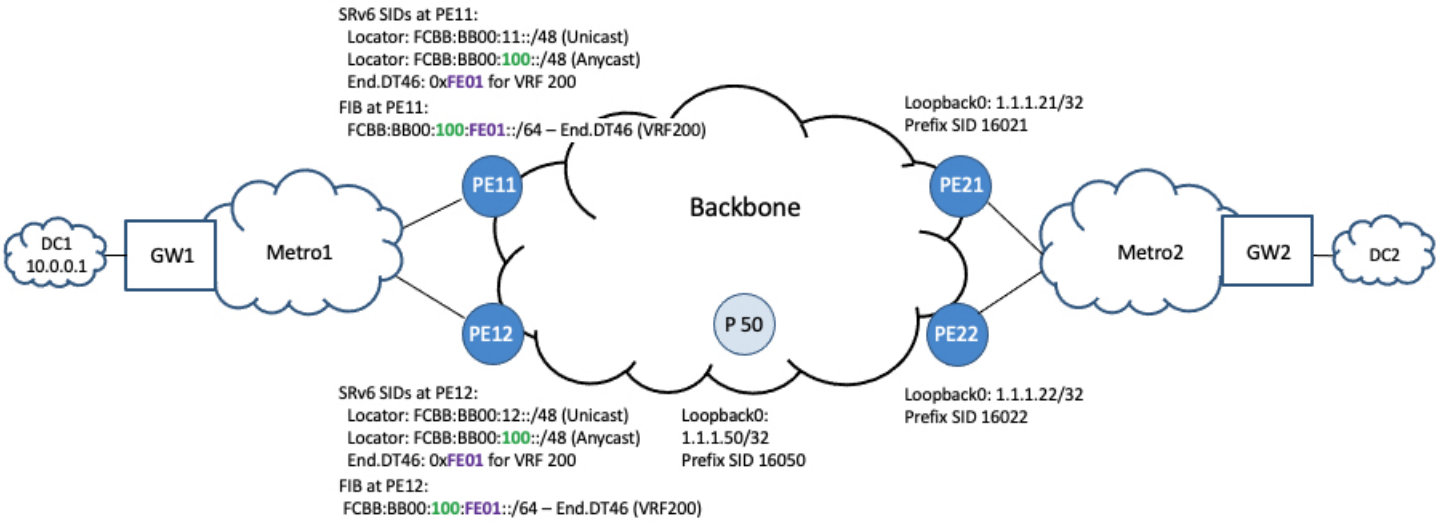


The SRv6 PE lite nodes are configured with SRv6 locators and explicit (manually assigned) service de-multiplexing end-point behaviors to perform decapsulation and VPN table lookup.

For high-availability, the SRv6 PE lite nodes are configured with an Anycast SRv6 locator (same locator in multiple nodes) and explicit end-point behavior with a common value among them. As a result, failure of a given SRv6 PE lite node can be handled by other nodes with the same Anycast locator and end-point behavior.

For example, SRv6 PE lite nodes (PE11 and PE12) are configured with the Anycast SRv6 locator (FCBB:BB00:100::/48) and a common End.DT46 function (0xFE01) associated with MPLS VPN VRF 200. The SRv6 PE lite nodes, which are part of the SR MPLS backbone, are configured with corresponding prefix SIDs.

*Figure 12: BGP VPN Overlay Route Advertisement (Traffic Direction – DC1 to DC2)*

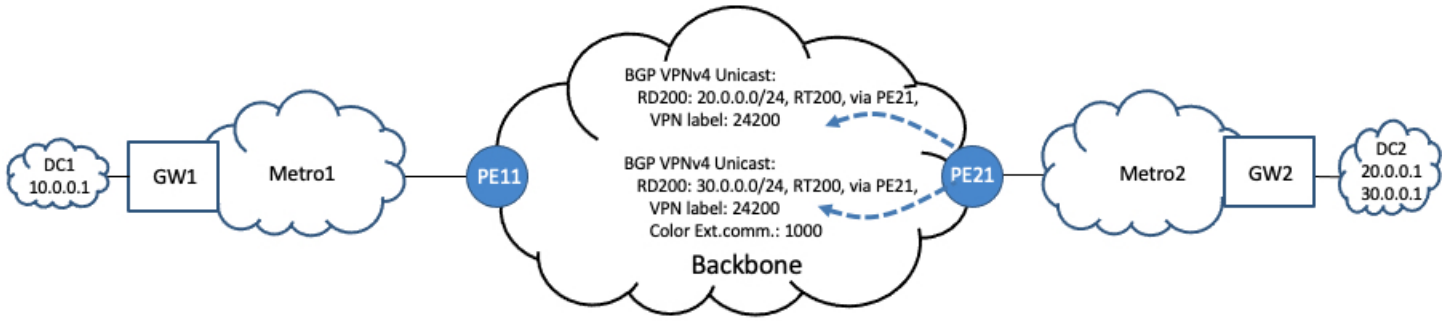


Prefixes from the data center are advertised in the backbone via multiprotocol BGP as part of a VPN. These prefixes can include a color extended community in order to indicate the desired transport SLA. For example, PE21 advertises BGP VPN overlay routes for DC2, 20.0.0.0/24 and 30.0.0.0/24. Prefix 20.0.0.0/24 requires best-effort treatment. Prefix 30.0.0.0/24 requires a transport SLA indicated by the presence of color extended community of value 1000.

*Figure 13: Backbone Transport Paths (Traffic Direction – DC1 to DC2)*

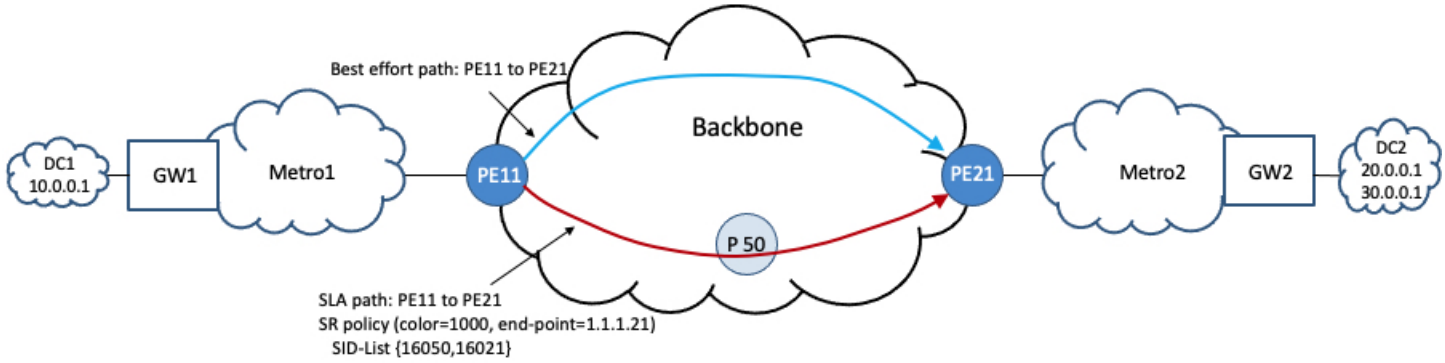


For traffic in the direction DC1 to DC2, the SRv6 PE lite node PE11 is an SR-TE headend of an SR policy associated with color 1000 and end-point of PE21. This SR policy will be used to steer traffic toward BGP service routes with color 1000 advertised by PE21. As an example, this SR policy is associated with a segment list that includes the prefix SID of a transit router in the backbone (PE50) and the prefix SID of the intended egress PE (PE21).

*Figure 14: Best Effort Traffic (Traffic Direction – DC1 to DC2)*

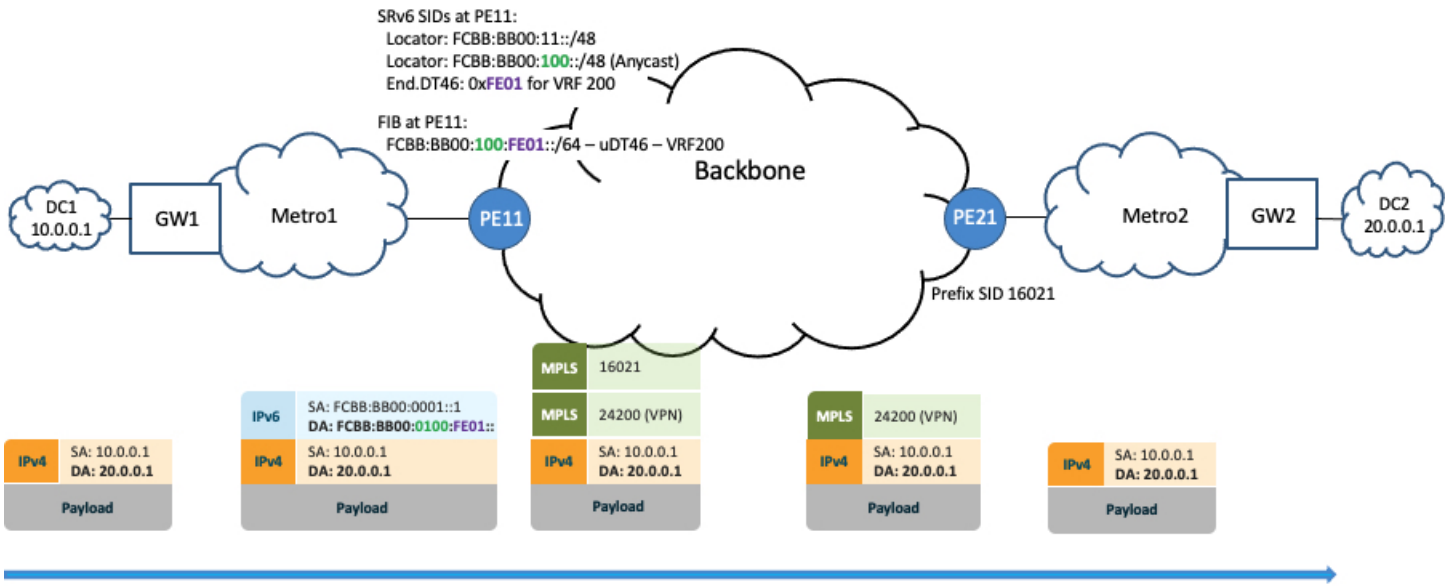


Traffic arriving at GW1 destined for 20.0.0.1 in DC2 is encapsulated into an outer IPv6 header with a destination address of FCBB:BB00:100:FE01::. This address is composed of the Anycast locator at PE11 and the explicit End.DT46 function value of VRF 200. Any transit nodes in the Metro1 domain simply perform a longest-prefix-match lookup for prefix FCBB:BB00:100::/48 and forward the packet along the shortest path to PE11.

PE11 removes the SRv6 encapsulation and looks up prefix 20.0.0.1 in VPN table of VRF 200. PE11 imposes the VPN label and the prefix SID of PE21 in order to steer traffic over the native LSP path.

*Figure 15: SLA Traffic (Traffic Direction – DC1 to DC2)*

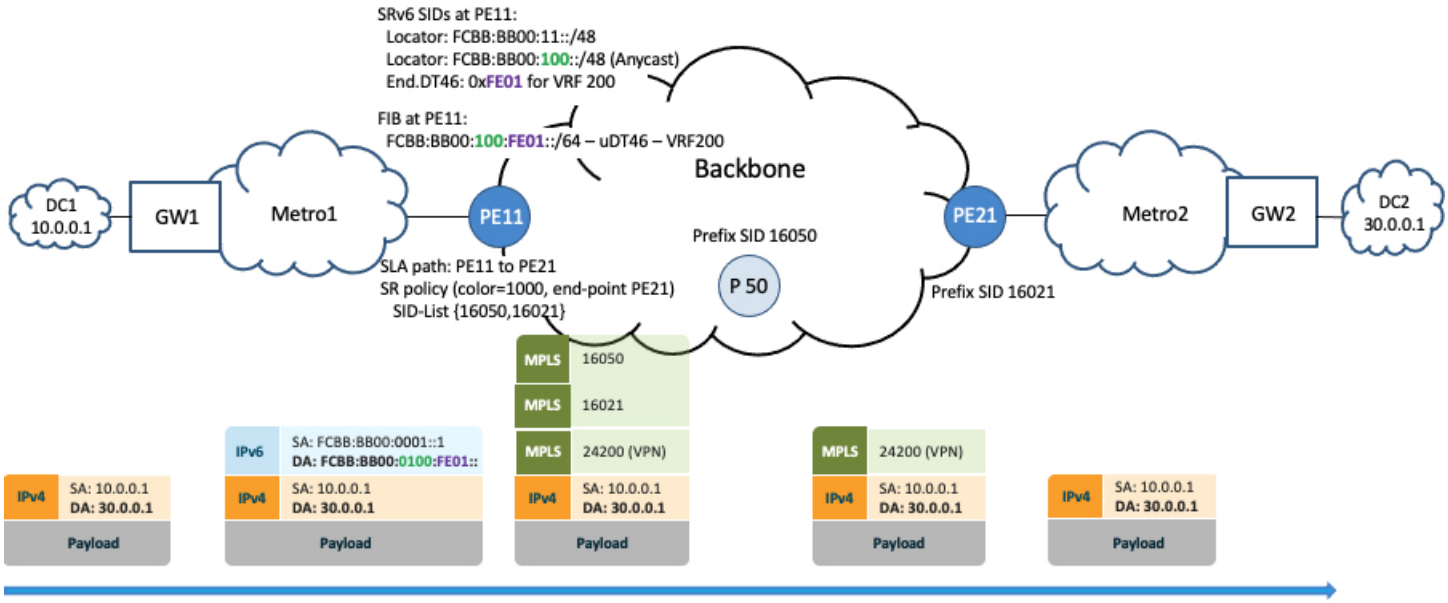

Traffic arriving at GW1 destined for 30.0.0.1 in DC2 is encapsulated into an outer IPv6 header with a destination address of FCBB:BB00:100:FE01::. As in the previous case, this address is composed of the Anycast locator at PE11 and the explicit End.DT46 function value of VRF 200. Any transit nodes in the Metro1 domain simply perform a longest-prefix-match lookup for prefix FCBB:BB00:100::/48 and forward the packet along the shortest path to PE11.

PE11 removes the SRv6 encapsulation and looks up prefix 30.0.0.1 in VPN table of VRF 200. PE11 imposes the VPN label and transport labels corresponding to the segment list of the SR policy (1000, PE21) in order to steer traffic over the path associated with the SR policy.

### Configuration for SRv6 PE Lite Node 11

Configure SRv6:

```
segment-routing
 srv6
  locators
   locator myLoc1
    micro-segment behavior unode psp-usd
    prefix fcbb:bb00:11::/48
   !
   locator myLocAnycast
    anycast
    micro-segment behavior unode psp-usd
    prefix fcbb:bb00:100::/48
   !
  !
 !
!
```

Configure IGP instance in core with SR MPLS enabled and prefix SID assigned to Loopback0:

```
router isis core
 address-family ipv4 unicast
  metric-style wide level 1
  router-id Loopback0
  segment-routing mpls
 !
 interface Loopback0
  address-family ipv4 unicast
   prefix-sid absolute 16011
  !
 !
!
```

Configure interface Loopback0:

```
interface Loopback0
 ipv4 address 1.1.1.11 255.255.255.255
!
```

Configure the SR policy:

```
segment-routing
 traffic-eng
  segment-list sample-SIDLIST
   index 10 mpls label 16050
   index 20 mpls label 16021
  !
  policy pol-sla-to_21
   color 1000 end-point ipv4 1.1.1.21
   candidate-paths
    preference 100
     explicit segment-list sample-SIDLIST
```

```
     !
    !
   !
  !
 !
!
```

Configure the VRF (dual-stack IPv4/IPv6):

```
vrf VRF-200
 address-family ipv4 unicast
  import route-target
   1:200
  !
  export route-policy SET-COLOR-1000
  export route-target
   1:200
  !
 !
 address-family ipv6 unicast
  import route-target
   1:200
  !
  export route-policy SET-COLOR-1000
  export route-target
   1:200
  !
 !
!
!
extcommunity-set opaque COLOR-1000
  1000
end-set
!
route-policy SET-COLOR-1000
  set extcommunity color COLOR-1000
end-policy
!
```

Configure BGP:

```
router bgp 100
 segment-routing srv6
  locator myLoc1
 !
 address-family vpnv4 unicast
 !
 neighbor 1.1.1.21
  remote-as 100
  address-family vpnv4 unicast
  !
 !
 vrf VRF-200
  rd 200:1
  address-family ipv4 unicast
  !
 !
!
```

# SRv6 SID Information in BGP-LS Reporting

BGP Link-State (BGP-LS) is used to report the topology of the domain using nodes, links, and prefixes. This feature adds the capability to report SRv6 Segment Identifier (SID) Network Layer Reachability Information (NLRI).

The following NLRI has been added to the BGP-LS protocol to support SRv6:

- Node NLRI: SRv6 Capabilities, SRv6 MSD types
- Link NLRI: End.X, LAN End.X, and SRv6 MSD types
- Prefix NLRI: SRv6 Locator
- SRv6 SID NLRI (for SIDs associated with the node): Endpoint Function, BGP-EPE Peer Node/Set

This example shows how to distribute IS-IS SRv6 link-state data using BGP-LS:

```
Router(config)# router isis 200
Router(config-isis)# distribute link-state instance-id 200
```

**Note** It is still possible to ping or trace a SID:

- **ping** B:k:F::
- **traceroute** B:k:F::

It is possible to use a list of packed carriers to ping or trace a SID, to ping or trace route, use **<destination SID> via srv6-carriers <list of packed carriers>**

# DHCPv4 Relay Agent and Proxy Support over SRv6

This feature introduces support for DHCPv4 Relay Agent and Proxy over SRv6.

An IOS XR router can act as a DHCPv4 relay agent/proxy with a DHCPv4 server connected over an SRv6 network.

The following functionality is supported:

- DHCPv4 relay agent/proxy over SRv6 with DHCPv4 server (helper-address) located in default VRF (global)
- DHCPv4 relay agent/proxy over SRv6 with DHCPv4 server (helper-address) located in non-default VRF
- DHCPv4 relay agent/proxy on interfaces associated with a default VRF (global)
- DHCPv4 relay agent/proxy on interfaces associated with a non-default VRF
- DHCPv4 relay agent/proxy on Ethernet physical interfaces
- DHCPv4 relay agent/proxy on Ethernet bundle interfaces

For information on configuring DHCPv4 relay agent and proxy, refer to the "Implementing the Dynamic Host Configuration Protocol" chapter in the *IP Addresses and Services Configuration Guide* .

# DHCPv6 Relay Agent Support over SRv6

This feature introduces support for DHCPv6 Relay Agent over SRv6.

An IOS XR router can act as a DHCPv6 relay agent with a DHCPv6 server connected over an SRv6 network.

The following functionality is supported:

- DHCPv6 relay agent over SRv6 with DHCPv6 server (helper-address) located in default VRF (global)
- DHCPv6 relay agent over SRv6 with DHCPv6 server (helper-address) located in non-default VRF
- DHCPv6 relay agent on interfaces associated with a default VRF (global)
- DHCPv6 relay agent on interfaces associated with a non-default VRF
- DHCPv6 relay agent on Ethernet physical interfaces
- DHCPv6 relay agent on Ethernet bundle interfaces

For information on configuring DHCPv6 relay agent, refer to the "Implementing the Dynamic Host Configuration Protocol" chapter in the *IP Addresses and Services Configuration Guide*.

# Full-Replace Migration to SRv6 Micro-SID

During the Full-Replace migration, both underlay and services are migrated from format1 to f3216. The underlay migration is done using the *Ship in the night* strategy, where updates into your environment are incremental, thereby phasing out your existing transport protocols when ready. This method minimizes the service disruption, and is recommended for seamless migration. The services migration is done using *swap* procedures, where the incoming transport label is swapped with an outgoing transport label.

The format1 to f3216 migration is seamless, requires minimal configurations, and no IETF signaling extensions. The migration enables preference of Micro-SID f3216 over format1, and minimizes traffic drop with faster convergence.

EVPN supports migration of the following services from format1 to f3216:

- IS-IS underlay (TILFA, uLoop, FlexAlgo)
- L3 overlay (VPNv4/VPNv6 and IPv4/IPv6)
- L2 overlay (EVPN VPWS - All-Active Multi-Homing)
- SRv6-MPLS IW Gateway, dual-connected PE

The following modes are supported in the context of migration:

- **Base**: SRv6 classic with format1 only.
- **Dual**: SRv6 classic with format1 and SRv6 Micro-SID with f3216 will both coexist.
- **f3216**: Micro-segment format. f3216 represents the format 3216, which is 32-bit block and 16-bit IDs.

The migration process involves the following steps:

1. **Prepare for migration**: Upgrade the network nodes to an image that is Micro-SID f3216 capable, and allows the coexistence of format1 and f3216.

2. **Migrate the underlay to f3216**: Enable IS-IS as an underlay protocol on PE nodes. The IS-IS configuration adds f3216 locators to format1 locators. Both format1 and f3216 endpoint SIDs are allocated, installed, and announced during this stage. f3216 is the preferred option over format1 for underlay paths.

   The IS-IS SR headends provide faster convergence to f3216. Faster convergence to f3216 is done on the per-prefix per-path level, does not need any new CLI, and avoids packet drops. The format1 locators are removed after underlay traffic convergence to f3216 on all nodes. The format1 locators are unconfigured from IS-IS, and deleted from SRv6.

   At the end of this step, the migration status of the following P Nodes are:

   - Locator reachability: f3216 only
   - Underlay endpoint/headends: f3216 only

   At the end of this step, the migration status of the following PE Nodes are:

   - Locator reachability: format1 and f3216
   - Underlay endpoint/headends: f3216 only
   - Overlay endpoint/headends: format1

3. **Migrate the overlay to f3216**: Enables overlay f3216 under BGP and EVPN on all PE nodes. The BGP and EVPN configuration replaces format1 by f3216 locators. During this stage, the f3216 Micro-SIDs are allocated, installed, and announced, while the format1 SIDs are deallocated, uninstalled, and withdrawn.

   The format1 locators are removed after overlay traffic convergence to f3216 on all nodes. The format1 locators are unconfigured from BGP and EVPN, and deleted from SRv6. For a transient period, BGP and EVPN might have some paths with format1 and some with f3216.

   At the end of this step, the migration status of the following is:

   - For P/PE Nodes:
     - Locator reachability: f3216 only
     - Underlay endpoint/headends: f3216 only
     - Overlay endpoint/headends: f3216 only

The migration starts with SRv6 base format1, and ends with SRv6 Micro-SID f3216. The migration states are:

1. **Initial state**: This is the early migration state of a deployment, for the supported features. This state comprises SRv6 base with format1.

   This example shows the initial state of migration with SRv6 and configure locator:

```
Router(config)# segment-routing srv6
Router(config-srv6)# locators
Router(config-srv6-locators)# locator myLoc0
Router(config-srv6-locators)# prefix f1bb:bbbb:bb00:0001::/64
```

This example shows the initial state of migration with SRv6 and IS-IS:

```
Router(config)# router isis 100
Router(config-isis)# address-family ipv6 unicast
Router(config-isis-af)# segment-routing srv6
Router(config-isis-srv6)# locator myLoc0
```

This example shows the initial state of migration with SRv6 and BGP/EVPN:

```
Router(config)# router bgp 100
Router(config-bgp)# bgp router-id 10
Router(config-bgp)# segment-routing srv6
Router(config-bgp-srv6)# locator myLoc0

Router(config)# evpn
Router(config-evpn)# segment-routing srv6
Router(config-evpn-srv6)# locator myLoc0
```

2. **In-migration state**: The migration procedures are initiated, and are in progress. This state comprises SRv6 in dual mode (base with format1, and Micro-SID with f3216).

   This example shows the in-migration state with SRv6 and configure locator:

```
Router(config)# segment-routing srv6
Router(config-srv6)# locators
Router(config-srv6-locators)# locator myLoc0
Router(config-srv6-locators)# prefix f1bb:bbbb:bb00:0001::/64
Router(config-srv6-locators)# delayed-delete
Router(config-srv6-locators)# locator myuLoc0
Router(config-srv6-locators)# micro-segment behavior unode psp-usd
Router(config-srv6-locators)# prefix fcbb:bb00:0001::/48
```

   This example shows the in-migration state with SRv6 and IS-IS:

```
Router(config)# router isis 100
Router(config-isis)# address-family ipv6 unicast
Router(config-isis-af)# segment-routing srv6
Router(config-isis-srv6)# locator myLoc0
Router(config-isis-srv6)# locator myuLoc0
```

   This example shows the in-migration state with SRv6 and BGP/EVPN:

```
Router(config)# router bgp 100
Router(config-bgp)# bgp router-id 10
Router(config-bgp)# segment-routing srv6
Router(config-bgp-srv6)# locator myuLoc0

Router(config)# evpn
Router(config-evpn)# segment-routing srv6
Router(config-evpn-srv6)# locator myuLoc0
```

3. **End state**: This is the state of deployment at the end of the migration. At the end state, you can update the network and add new features. The Full-Replace migration end state can be of two modes:

   - **Full-Replace**: Both underlay and overlay are migrated to Micro-SID f3216. Full-Replace is the Cisco recommended migration type.

- **uF1**: Underlay migrated to Micro-SID f3216, overlay remains format1. The uF1 migration is a transient state of the Full-Replace migration type.

This example shows the end state with SRv6 and configure locator:

```
Router(config)# segment-routing srv6
Router(config-srv6)# locators
Router(config-srv6-locators)# locator myuLoc0
Router(config-srv6-locators)# micro-segment behavior unode psp-usd
Router(config-srv6-locators)# prefix fcbb:bb00:0001::/48
```

This example shows the end state with SRv6 and IS-IS:

```
Router(config)# router isis 100
Router(config-isis)# address-family ipv6 unicast
Router(config-isis-af)# segment-routing srv6
Router(config-isis-srv6)# locator myuLoc0
```

This example shows the end state with SRv6 and BGP/EVPN:

```
Router(config)# router bgp 100
Router(config-bgp)# bgp router-id 10
Router(config-bgp)# segment-routing srv6
Router(config-bgp-srv6)# locator myuLoc0

Router(config)# evpn
Router(config-evpn)# segment-routing srv6
Router(config-evpn-srv6)# locator myuLoc0
```

Run the following command to check the result of migration, as shown in the example:

```
RP/0/RSP0/CPU0:Router# sh route ipv6 fc00:cc30:600:e004:: detail
Wed Nov 10 18:57:56.645 UTC

Routing entry for fc00:cc30:600::/48
    Known via "isis 2", distance 115, metric 141, SRv6-locator, type level-2
    Installed Nov 2 18:56:55.718 for 00:01:01
    Routing Descriptor Blocks
      fe80::232:17ff:fec3:58c0, from 7511::1, via TenGigE0/0/0/16.1, Protected
        Route metric is 141
        Label: None
        Tunnel ID: None
        Binding Label: None
        Extended communities count: 0
        Path id:1  Path ref count:0
        NHID:0x20006(Ref:193)
        Backup path id:65
      fe80::226:80ff:fe36:7c01, from 7511::1, via TenGigE1/0/9/1.1, Backup (TI-LFA)
        Repair Node(s): 3888::1
        Route metric is 251
        Label: None
        Tunnel ID: None
        Binding Label: None
        Extended communities count: 0
        Path id:65  Path ref count:1
        NHID:0x20007(Ref:163)
        SRv6 Headend:H.Insert.Red [f3216], SID-list {fc00:cc30:700::}
 Route version is 0x0 (8)
 No local label
```

```
IP Precedence: Not Set
QoS Group ID: Not Set
Flow-tag: Not Set
Fwd-Class: Not Set
Route Priority:RIB_PRIORITY_NON_RECURSIVE_LOW (8) SVD Type RIB_SVD_TYPE_LOCAL
Download Priority 2, Download Version 261731
No advertising protos.
```

# Full-Replace Migration to SRv6 Micro-SID Restrictions

You need to reload the the line cards as the hardware profiles go through multiple transitions during the Full-Replace migration to SRv6 Micro-SID.

You can overcome the traffic drop duration at time of swap of format1 by f3216 on a PE node depending on the BGP/EVPN convergence using the **delayed_delete** command. When the **delayed_delete** command is configured against the format1 SID locator, RIB notifies EVPN about this change. The EVPN in turn stores the delayed flag in its RIB locator database.

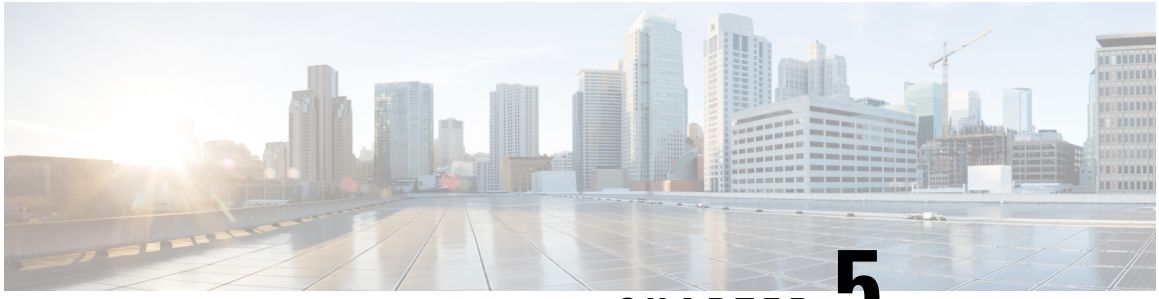

CHAPTER 5

# Configure Segment Routing over IPv6 (SRv6) with Full-Length SIDs

**Note** IOS XR release 7.3.2 supports SRv6 with Full-length SID and Micro-SID formats; however, only one format is supported in the network at a time.

To use SRv6 Full-length SID, globally enable SRv6 and configure the 64-bit locator. See the Configuring SRv6, on page 121.

To use SRv6 Micro-SID (uSID), see the Configure Segment Routing over IPv6 (SRv6) with Micro-SIDs, on page 9 chapter.

Segment Routing for IPv6 (SRv6) is the implementation of Segment Routing over the IPv6 dataplane.


- Segment Routing over IPv6 Overview, on page 115
- Configuring SRv6 under IS-IS, on page 124
- Configuring SRv6 IS-IS Flexible Algorithm, on page 125
- Configuring SRv6 IS-IS TI-LFA, on page 127
- Configuring SRv6 IS-IS Microloop Avoidance, on page 130
- SRv6 Services: IPv4 L3VPN, on page 131
- SRv6 Services: IPv6 L3VPN, on page 139
- SRv6 Services: IPv4 L3VPN Active-Standby Redundancy using Port-Active Mode, on page 148
- SRv6 Services: BGP Global IPv4, on page 152
- SRv6 Services: BGP Global IPv6, on page 155
- SRv6 Services: EVPN VPWS — All-Active Multi-Homing , on page 161
- SRv6 Services: SRv6 Services TLV Type 5 Support, on page 163
- SRv6/MPLS L3 Service Interworking Gateway, on page 163
- SRv6/MPLS Dual-Connected PE, on page 168
- SRv6 SID Information in BGP-LS Reporting, on page 169


## Segment Routing over IPv6 Overview

Segment Routing (SR) can be applied on both MPLS and IPv6 data planes. Segment Routing over IPv6 (SRv6) extends Segment Routing support with IPv6 data plane.

In an SR-MPLS enabled network, an MPLS label represents an instruction. The source nodes programs the path to a destination in the packet header as a stack of labels.

SRv6 introduces the Network Programming framework that enables a network operator or an application to specify a packet processing program by encoding a sequence of instructions in the IPv6 packet header. Each instruction is implemented on one or several nodes in the network and identified by an SRv6 Segment Identifier (SID) in the packet. The SRv6 Network Programming framework is defined in IETF RFC 8986 SRv6 Network Programming.

In SRv6, an IPv6 address represents an instruction. SRv6 uses a new type of IPv6 Routing Extension Header, called the Segment Routing Header (SRH), in order to encode an ordered list of instructions. The active segment is indicated by the destination address of the packet, and the next segment is indicated by a pointer in the SRH.

***Figure 16: Network Program in the Packet Header***

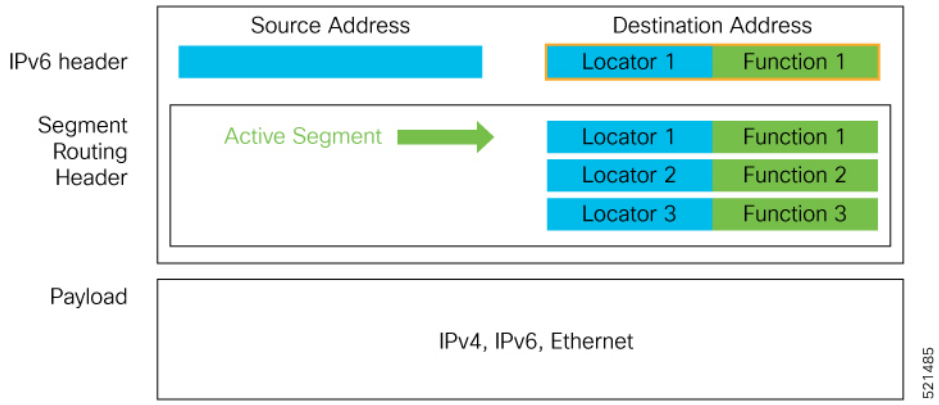


The SRv6 SRH is documented in IETF RFC IPv6 Segment Routing Header (SRH).

The SRH is defined as follows:

```
 0                   1                   2                   3
 0 1 2 3 4 5 6 7 8 9 0 1 2 3 4 5 6 7 8 9 0 1 2 3 4 5 6 7 8 9 0 1
+-+-+-+-+-+-+-+-+-+-+-+-+-+-+-+-+-+-+-+-+-+-+-+-+-+-+-+-+-+-+-+-+
| Next Header   |  Hdr Ext Len  | Routing Type  | Segments Left |
+-+-+-+-+-+-+-+-+-+-+-+-+-+-+-+-+-+-+-+-+-+-+-+-+-+-+-+-+-+-+-+-+
|  Last Entry   |     Flags     |              Tag              |
+-+-+-+-+-+-+-+-+-+-+-+-+-+-+-+-+-+-+-+-+-+-+-+-+-+-+-+-+-+-+-+-+
|                                                               |
|            Segment List[0] (128-bit IPv6 address)             |
|                                                               |
|                                                               |
+-+-+-+-+-+-+-+-+-+-+-+-+-+-+-+-+-+-+-+-+-+-+-+-+-+-+-+-+-+-+-+-+
|                                                               |
|                                                               |
                              ...
|                                                               |
|                                                               |
+-+-+-+-+-+-+-+-+-+-+-+-+-+-+-+-+-+-+-+-+-+-+-+-+-+-+-+-+-+-+-+-+
|                                                               |
|            Segment List[n] (128-bit IPv6 address)             |
|                                                               |
|                                                               |
+-+-+-+-+-+-+-+-+-+-+-+-+-+-+-+-+-+-+-+-+-+-+-+-+-+-+-+-+-+-+-+-+
```

```
//                                                               //
//         Optional Type Length Value objects (variable)         //
//                                                               //
+-+-+-+-+-+-+-+-+-+-+-+-+-+-+-+-+-+-+-+-+-+-+-+-+-+-+-+-+-+-+-+-+
```

The following list explains the fields in SRH:

- Next header—Identifies the type of header immediately following the SRH.
- Hdr Ext Len (header extension length)—The length of the SRH in 8-octet units, not including the first 8 octets.
- Segments left—Specifies the number of route segments remaining. That means, the number of explicitly listed intermediate nodes still to be visited before reaching the final destination.
- Last Entry—Contains the index (zero based) of the last element of the segment list.
- Flags— Contains 8 bits of flags.
- Tag—Tag a packet as part of a class or group of packets like packets sharing the same set of properties.
- Segment list—128-bit IPv6 addresses representing the *n*th segment in the segment list. The segment list encoding starts from the last segment of the SR policy (path). That means the first element of the segment list (Segment list [0]) contains the last segment of the SR policy, the second element contains the penultimate segment of the SR policy and so on.

In SRv6, a SID represents a 128-bit value, consisting of the following three parts:

- Locator: This is the first part of the SID with most significant bits and represents an address of a specific SRv6 node.
- Function: This is the portion of the SID that is local to the owner node and designates a specific SRv6 function (network instruction) that is executed locally on a particular node, specified by the locator bits.
- Args: This field is optional and represents optional arguments to the function.

The locator part can be further divided into two parts:

- SID Block: This field is the SRv6 network designator and is a fixed or known address space for an SRv6 domain. This is the most significant bit (MSB) portion of a locator subnet.
- Node Id: This field is the node designator in an SRv6 network and is the least significant bit (LSB) portion of a locator subnet.

### SRv6 Node Roles

Each node along the SRv6 packet path has a different functionality:

- Source node—A node that can generate an IPv6 packet with an SRH (an SRv6 packet), or an ingress node that can impose an SRH on an IPv6 packet.
- Transit node—A node along the path of the SRv6 packet (IPv6 packet and SRH). The transit node does not inspect the SRH. The destination address of the IPv6 packet does not correspond to the transit node.
- Endpoint node—A node in the SRv6 domain where the SRv6 segment is terminated. The destination address of the IPv6 packet with an SRH corresponds to the end point node. The segment endpoint node executes the function bound to the SID

### SRv6 Head-End Behaviors

The SR Headend with Encapsulation behaviors are documented in the IETF RFC 8986 SRv6 Network Programming.

The SR Headend with Insertion head-end behaviors are documented in the following IETF draft:

https://datatracker.ietf.org/doc/draft-filsfils-spring-srv6-net-pgm-insertion/

This section describes a set of SR Policy headend behaviors. The following list summarizes them:

- H.Encaps—SR Headend Behavior with Encapsulation in an SRv6 Policy
- H.Encaps.Red—H.Encaps with Reduced Encapsulation
- H.Insert—SR Headend with insertion of an SRv6 Policy
- H.Insert.Red—H.Insert with reduced insertion

### SRv6 Endpoint Behaviors

The SRv6 endpoint behaviors are documented in the IETF RFC 8986 SRv6 Network Programming.

The following is a subset of defined SRv6 endpoint behaviors that can be associated with a SID.

- End—Endpoint function. The SRv6 instantiation of a Prefix SID [RFC8402].
- End.X—Endpoint with Layer-3 cross-connect. The SRv6 instantiation of an Adj SID [RFC8402].
- End.DX6—Endpoint with decapsulation and IPv6 cross-connect (IPv6-L3VPN - equivalent to per-CE VPN label).
- End.DX4—Endpoint with decapsulation and IPv4 cross-connect (IPv4-L3VPN - equivalent to per-CE VPN label).
- End.DT6—Endpoint with decapsulation and IPv6 table lookup (IPv6-L3VPN - equivalent to per-VRF VPN label).
- End.DT4—Endpoint with decapsulation and IPv4 table lookup (IPv4-L3VPN - equivalent to per-VRF VPN label).
- End.DT46—Endpoint with decapsulation and specific IP table lookup (IP-L3VPN - equivalent to per-VRF VPN label).
- End.DX2—Endpoint with decapsulation and L2 cross-connect (L2VPN use-case).
- End.B6.Encaps—Endpoint bound to an SRv6 policy with encapsulation. SRv6 instantiation of a Binding SID.
- End.B6.Encaps.RED—End.B6.Encaps with reduced SRH. SRv6 instantiation of a Binding SID.

### SRv6 Endpoint Behavior Variants

*Table 16: Feature History Table*

| Feature Name | Release Information | Feature Description |
|---|---|---|
| SRv6: Ultimate Segment Decapsulation (USD) on Full-length SIDs | Release 7.5.2 | The Ultimate Segment Decapsulation (USD) variant is supported on SRv6 endpoint nodes using full-length SIDs. One of the USD variant applications is the case of TI-LFA in P routers with encapsulation with H.Encaps. The USD variant allows the last Segment Endpoint Node in the repair path list to decapsulate the IPv6 header added at the TI-LFA Point of Local Repair and forward the inner packet.<br><br>In earlier releases, the USD variant was supported on SRv6 endpoint nodes using Micro SIDs (uSIDs). |

Depending on how the SRH is handled, different behavior variants are defined for the End and End.X behaviors. The End and End.X behaviors can support these variants, either individually or in combinations.

- **Penultimate Segment Pop (PSP) of the SRH variant**—An SR Segment Endpoint Nodes receive the IPv6 packet with the Destination Address field of the IPv6 Header equal to its SID address.

  A penultimate SR Segment Endpoint Node is one that, as part of the SID processing, copies the last SID from the SRH into the IPv6 Destination Address and decrements the Segments Left value from one to zero.

  The PSP operation takes place only at a penultimate SR Segment Endpoint Node and does not happen at non-penultimate endpoint nodes. When a SID of PSP-flavor is processed at a non-penultimate SR Segment Endpoint Node, the PSP behavior is not performed since Segments Left would not be zero.

  The SR Segment Endpoint Nodes advertise the SIDs instantiated on them via control plane protocols. A PSP-flavored SID is used by the Source SR Node when it needs to instruct the penultimate SR Segment Endpoint Node listed in the SRH to remove the SRH from the IPv6 header.

- **Ultimate Segment Pop (USP) of the SRH variant**—The SRH processing of the End and End.X behaviors are modified as follows:

  If Segments Left is 0, then:

  1. Update the Next Header field in the preceding header to the Next Header value of the SRH
  2. Decrease the IPv6 header Payload Length by 8*(Hdr Ext Len+1)
  3. Remove the SRH from the IPv6 extension header chain
  4. Proceed to process the next header in the packet

One of the applications of the USP flavor is when a packet with an SRH is destined to an application on hosts with smartNICs implementing SRv6. The USP flavor is used to remove the consumed SRH from the extension header chain before sending the packet to the host.

- **Ultimate Segment Decapsulation (USD) variant**—The Upper-layer header processing of the End and End.X behaviors are modified as follows:
  - **End** behavior: If the Upper-layer Header type is 41 (IPv6), then:
    1. Remove the outer IPv6 Header with all its extension headers
    2. Submit the packet to the egress IPv6 FIB lookup and transmission to the new destination
    3. Else, if the Upper-layer Header type is 4 (IPv4)
    4. Remove the outer IPv6 Header with all its extension headers
    5. Submit the packet to the egress IPv4 FIB lookup and transmission to the new destination
    6. Else, process as per Section 4.1.1 (Upper-Layer Header) of IETF RFC 8986 SRv6 Network Programming
  - **End.X** behavior: If the Upper-layer Header type is 41 (IPv6) or 4 (IPv4), then:
    1. Remove the outer IPv6 Header with all its extension headers
    2. Forward the exposed IP packet to the L3 adjacency J
    3. Else, process as per Section 4.1.1 (Upper-Layer Header) of IETF RFC 8986 SRv6 Network Programming

One of the applications of the USD flavor is the case of TI-LFA in P routers with encapsulation with H.Encaps. The USD flavor allows the last Segment Endpoint Node in the repair path list to decapsulate the IPv6 header added at the TI-LFA Point of Local Repair and forward the inner packet.

## Usage Guidelines and Limitations

### General Guidelines and Limitations

- Cisco IOS XR Release 7.5.2 and later supports the following SRv6 SID behaviors and variants:
  - END with PSP/USD
  - END.X with PSP/USD
  - END.DT4
  - END.DT6
- SRv6 Underlay support includes:
  - IGP redistribution/leaking between levels
  - Prefix Summarization on ABR routers
  - IS-IS TI-LFA
  - Microloop Avoidance

- Flex-algo

### Configuring SRv6

To enable SRv6 globally, you should first configure a locator with its prefix. The IS-IS protocol announces the locator prefix in IPv6 network and SRv6 applications (like ISIS, BGP) use it to allocate SIDs.

The following usage guidelines and restrictions apply while configuring SRv6.

- All routers in the SRv6 domain should have the same SID block (network designator) in their locator.
- The locator length should be 64-bits long.
  - The SID block portion (MSBs) cannot exceed 40 bits. If this value is less than 40 bits, user should use a pattern of zeros as a filler.
  - The Node Id portion (LSBs) cannot exceed 24 bits.
- You can configure up to 8 locators to support SRv6 Flexible Algorithm. All locators prefix must share the same SID block (first 40-bits).

#### Enabling SRv6 with Locator

This example shows how to globally enable SRv6 and configure locator.

```
Router(config)# segment-routing srv6
Router(config-srv6)# locators
Router(config-srv6-locators)# locator myLoc1
Router(config-srv6-locator)# prefix 2001:db8:0:a2::/64
```

#### Optional: Configuring Encapsulation Parameters

This example shows how to configure encapsulation parameters when configuring SRv6. These optional parameters include:

- **segment-routing srv6 encapsulation source-address** *ipv6-addr*—Source Address of outer encapsulating IPv6 header. The default source address for encapsulation is one of the loopback addresses.
- **segment-routing srv6 encapsulation hop-limit** {*count* | **propagate**}—The hop limit of outer-encapsulating IPv6 header. The range for *count* is from 1 to 255; the default value for hop-limit is 255. Use **propagate** to set the hop-limit value by propagation (from incoming packet/frame).

```
Router(config)# segment-routing srv6
Router(config-srv6)# encapsulation source-address 1::1
Router(config-srv6)# hop-limit 60
```

#### Optional: Enabling Syslog Logging for Locator Status Changes

This example shows how to enable the logging of locator status.

```
Router(config)# segment-routing srv6
Router(config-srv6)# logging locator status
```

### Verifying SRv6 Manager

This example shows how to verify the overall SRv6 state from SRv6 Manager point of view. The output displays parameters in use, summary information, and platform specific capabilities.

```
Router# show segment-routing srv6 manager
Parameters:
  Parameters:
  SRv6 Enabled: Yes
  SRv6 Operational Mode:
    Base:
      SID Base Block: 2001:db8::/40
  Encapsulation:
    Source Address:
      Configured: 1::1
      Default: 5::5
    Hop-Limit: Default
    Traffic-class: Default
Summary:
  Number of Locators: 1 (1 operational)
  Number of SIDs: 4 (0 stale)
  Max SIDs: 64000
  OOR:
    Thresholds: Green 3200, Warning 1920
    Status: Resource Available
        History: (0 cleared, 0 warnings, 0 full)
    Block 2001:db8:0:a2::/64:
        Number of SIDs free: 65470
        Max SIDs: 65470
        Thresholds: Green 3274, Warning 1965
        Status: Resource Available
            History: (0 cleared, 0 warnings, 0 full)
Platform Capabilities:
  SRv6: Yes
  TILFA: Yes
  Microloop-Avoidance: Yes
  Endpoint behaviors:
    End (PSP)
    End.X (PSP)
    End.DX6
    End.DX4
    End.DT6
    End.DT4
    End.DX2
    uN (PSP/USD)
    uA (PSP/USD)
    uDT6
    uDT4
    uDX2
    uB6 (Insert.Red)
  Headend behaviors:
    T
    H.Insert.Red
    H.Encaps.Red
  Security rules:
    SEC-1
    SEC-2
    SEC-3
  Counters:
    CNT-1
    CNT-3
  Signaled parameters:
    Max-SL          : 3
    Max-End-Pop-SRH : 3
    Max-H-Insert    : 3 sids
    Max-H-Encap     : 3 sids
    Max-End-D       : 4
  Configurable parameters (under srv6):
```

```
    Encapsulation:
      Source Address: Yes
      Hop-Limit     : value=Yes, propagate=No
      Traffic-class : value=Yes, propagate=Yes
  Max SIDs: 64000
  SID Holdtime: 3 mins
```

### Verifying SRv6 Locator

This example shows how to verify the locator configuration and its operational status.

```
Router# show segment-routing srv6 locator myLoc1 detail
Name                 ID      Prefix                  Status
-------------------- ------- ------------------------ -------
myLoc1*              5       2001:db8:0:a2::/64       Up
  (*): is-default
  Interface:
    Name: srv6-myLoc1
    IFH : 0x00000170
    IPv6 address: 2001:db8:0:a2::/64
  Chkpt Obj ID: 0x2fc8
  Created: Apr 25 06:21:57.077 (00:03:37 ago)
```

### Verifying SRv6 Local SIDs

This example shows how to verify the allocation of SRv6 local SIDs off locator(s).

```
Router# show segment-routing srv6 locator myLoc1 sid

SID                         Function     Context                           Owner
     State  RW
-------------------------  -----------  ------------------------------   ------------------
  -----  --
2001:db8:0:a2:1::           End (PSP)    'default':1                       sidmgr
     InUse  Y
2001:db8:0:a2:40::          End.DT4      'VRF1'                            bgp-100
     InUse  Y
2001:db8:0:a2:41::          End.X (PSP)  [Hu0/1/0/1, Link-Local]           isis-srv6
     InUse  Y
```

The following example shows how to display detail information regarding an allocated SRv6 local SID.

```
Router# show segment-routing srv6 locator myLoc1 sid 2001:db8:0:a2:40:: detail

SID                         Function     Context                           Owner
     State  RW
-------------------------  -----------  ------------------------------   ------------------
  -----  --
2001:db8:0:a2:40::          End.DT4      'VRF1'                            bgp-100
     InUse  Y
  SID context: { table-id=0xe0000011 ('VRF1':IPv4/Unicast) }
  Locator: myLoc1'
  Allocation type: Dynamic
  Created: Feb  1 14:04:02.901 (3d00h ago)
```

Similarly, you can display SID information across locators by using the **show segment-routing sid** command.

### show Commands

You can use the following **show** commands to verify the SRv6 global and locator configuration:

| Command | Description |
|---|---|
| **show segment-routing srv6 manager** | Displays the summary information from SRv6 manager, including platform capabilities. |
| **show segment-routing srv6 locator** *locator-name* [**detail**] | Displays the SRv6 locator information on the router. |
| **show segment-routing srv6 locator** *locator-name* **sid** [[*sid-ipv6-address* [**detail**] | Displays the information regarding SRv6 local SID(s) allocated from a given locator. |
| **show segment-routing srv6 sid** [*sid-ipv6-address* \| **all** \| **stale**] [**detail**] | Displays SID information across locators. By default, only “active” (i.e. non-stale) SIDs are displayed. |
| **show route ipv6 local-srv6** | Displays all SRv6 local-SID prefixes in IPv6 RIB. |

# Configuring SRv6 under IS-IS

Intermediate System-to-Intermediate System (IS-IS) protocol already supports segment routing with MPLS dataplane (SR-MPLS). This feature enables extensions in IS-IS to support Segment Routing with IPv6 data plane (SRv6). The extensions include advertising the SRv6 capabilities of nodes and node and adjacency segments as SRv6 SIDs.

SRv6 IS-IS performs the following functionalities:

1. Interacts with SID Manager to learn local locator prefixes and announces the locator prefixes in the IGP domain.
2. Learns remote locator prefixes from other IS-IS neighbor routers and installs the learned remote locator IPv6 prefix in RIB or FIB.
3. Allocate or learn prefix SID and adjacency SIDs, create local SID entries, and advertise them in the IGP domain.

### Usage Guidelines and Restrictions

The following usage guidelines and restrictions apply for SRv6 IS-IS:

- An IS-IS address-family can support either SR-MPLS or SRv6, but both at the same time is not supported.

### Configuring SRv6 under IS-IS

To configure SRv6 IS-IS, use the following command:

- **router isis** *instance* **address-family ipv6 unicast segment-routing srv6 locator** *locator* [**level** {**1** | **2**}]—Enable SRv6 under the IS-IS IPv6 address-family and assign SRv6 locator(s) to it. Use the **level** {**1** | **2**} keywords to advertise the locator only in the specified IS-IS level.

The following example shows how to configure SRv6 under IS-IS.

```
Router(config)# router isis core
Router(config-isis)# address-family ipv6 unicast
Router(config-isis-af)# segment-routing srv6
Router(config-isis-srv6)# locator myLoc1 level 1
Router(config-isis-srv6-loc)# exit
```

For more information about configuring IS-IS, refer to the "Implementing IS-IS" chapter in the *Routing Configuration Guide for Cisco ASR 9000*.

# Configuring SRv6 IS-IS Flexible Algorithm

This feature introduces support for implementing Flexible Algorithm using IS-IS SRv6.

SRv6 Flexible Algorithm allows operators to customize IGP shortest path computation according to their own needs. An operator can assign custom SRv6 locators to realize forwarding beyond link-cost-based SPF. As a result, Flexible Algorithm provides a traffic engineered path automatically computed by the IGP to any destination reachable by the IGP.

### Restrictions and Usage Guidelines

The following restrictions and usage guidelines apply:

- You can configure up to 8 locators to support SRv6 Flexible Algorithm:
  - All locators prefix must share the same SID block (first 40-bits).
  - The Locator Algorithm value range is 128 to 255.

### Configuring SRv6 IS-IS Flexible Algorithm

The following example shows how to configure SRv6 IS-IS Flexible Algorithm.

**Note** Complete the Configuring SRv6 before performing these steps.

```
Router(config)# segment-routing srv6
Router(config-srv6)# locators
Router(config-srv6-locators)# locator Loc1-BE // best-effort
Router(config-srv6-locator)# prefix 2001:db8:0:a2::/64
Router(config-srv6-locator)# exit
Router(config-srv6-locators)# locator Loc1-LL // low latency
Router(config-srv6-locator)# prefix 2001:db8:1:a2::/64
Router(config-srv6-locator)# algorithm 128
Router(config-srv6-locator)# exit
Router(config-srv6)# exit
```

### Configuring SRv6 IS-IS

The following example shows how to configure SRv6 IS-IS.

```
Router(config)# router isis test-igp
```

```
Router(config-isis)# flex-algo 128
Router(config-isis-flex-algo)# exit
Router(config-isis)# address-family ipv6 unicast
Router(config-isis-af)# segment-routing srv6
Router(config-isis-srv6)# locator Loc1-BE
Router(config-isis-srv6-loc)# exit
Router(config-isis-srv6)# locator Loc1-LL
Router(config-isis-srv6-loc)# exit
```

### Enable Flexible Algorithm for Low Latency

The following example shows how to enable Flexible Algorithm for low-latency:

- IS-IS: Configure Flexible Algorithm definition with **delay** objective
- Performance-measurement: Configure static delay per interface

```
Router(config)# router isis test-igp
Router(config-isis)# flex-algo 128
Router(config-isis-flex-algo)# metric-type delay
Router(config-isis-flex-algo)# exit
Router(config-isis)# interface GigabitEthernet0/0/0/0
Router(config-isis-if)# address-family ipv6 unicast
Router(config-isis-if-af)# root

Router(config)# performance-measurement
Router(config-perf-meas)# interface GigabitEthernet0/0/0/0
Router(config-pm-intf)# delay-measurement
Router(config-pm-intf-dm)# advertise-delay 100
Router(config-pm-intf-dm)# commit
```

### Verification

```
SRv6-LF1# show segment-routing srv6 locator
Mon Aug 12 20:54:15.414 EDT
Name                  ID       Algo  Prefix                    Status
--------------------  -------  ----  ------------------------  -------
Loc1-BE               17       0     2001:db8:0:a2::/64        Up
Loc1-LL               18       128   2001:db8:1:a2::/64        Up


SRv6-LF1# show isis flex-algo 128
Mon Aug 12 21:00:54.282 EDT

IS-IS test-igp Flex-Algo Database

Flex-Algo 128:

Level-2:
        Definition Priority: 128
        Definition Source: SRv6-LF1.00, (Local)
        Definition Equal to Local: Yes
        Disabled: No


Level-1:
        Definition Priority: 128
        Definition Source: SRv6-LF1.00, (Local)
        Definition Equal to Local: Yes
```

```
    Disabled: No

Local Priority: 128
FRR Disabled: No
Microloop Avoidance Disabled: No
```

# Configuring SRv6 IS-IS TI-LFA

This feature introduces support for implementing Topology-Independent Loop-Free Alternate (TI-LFA) using IS-IS SRv6.

TI-LFA provides link protection in topologies where other fast reroute techniques cannot provide protection. The goal of TI-LFA is to reduce the packet loss that results while routers converge after a topology change due to a link failure. TI-LFA leverages the post-convergence path which is planned to carry the traffic and ensures link and node protection within 50 milliseconds. TI-LFA with IS-IS SR-MPLS is already supported.

TI-LFA provides link, node, and Shared Risk Link Groups (SRLG) protection in any topology.

### Usage Guidelines and Restrictions

The following usage guidelines and restrictions apply:

- TI-LFA provides link protection by default. Additional tiebreaker configuration is required to enable node or SRLG protection.
- Usage guidelines for node and SRLG protection:
  - TI-LFA node protection functionality provides protection from node failures. The neighbor node is excluded during the post convergence backup path calculation.
  - Shared Risk Link Groups (SRLG) refer to situations in which links in a network share a common fiber (or a common physical attribute). These links have a shared risk: when one link fails, other links in the group might also fail. TI-LFA SRLG protection attempts to find the post-convergence backup path that excludes the SRLG of the protected link. All local links that share any SRLG with the protecting link are excluded.
  - When you enable link protection, you can also enable node protection, SRLG protection, or both, and specify a tiebreaker priority in case there are multiple LFAs.
  - Valid priority values are from 1 to 255. The lower the priority value, the higher the priority of the rule. Link protection always has a lower priority than node or SRLG protection.

### Configuring SRv6 IS-IS TI-LFA

The following example shows how to configure SRv6 IS-IS TI-LFA.

**Note** Complete the Configuring SRv6 before performing these steps.

```
Router(config)# router isis core
Router(config-isis)# address-family ipv6 unicast
```

```
Router(config-isis-af)# segment-routing srv6
Router(config-isis-srv6)# locator locator1
Router(config-isis-srv6-loc)# exit
Router(config-isis)# interface loopback 0
Router(config-isis-if)# passive
Router(config-isis-if)# address-family ipv6 unicast
Router(config-isis-if-af)# exit
Router(config-isis)# interface bundle-ether 1201
Router(config-isis-if)# address-family ipv6 unicast
Router(config-isis-if-af)# fast-reroute per-prefix
Router(config-isis-if-af)# fast-reroute per-prefix ti-lfa
Router(config-isis-if-af)# exit
Router(config-isis)# interface bundle-ether 1301
Router(config-isis-if)# address-family ipv6 unicast
Router(config-isis-if-af)# fast-reroute per-prefix
Router(config-isis-if-af)# fast-reroute per-prefix ti-lfa
Router(config-isis-if-af)# fast-reroute per-prefix tiebreaker node-protecting index 100
Router(config-isis-if-af)# fast-reroute per-prefix tiebreaker srlg-disjoint index 200
Router(config-isis-if-af)# exit
```

### Verification

This example shows how to verify the SRv6 IS-IS TI-LFA configuration using the **show isis ipv6 fast-reroute** *ipv6-prefix* **detail** command.

```
Router# show isis ipv6 fast-reroute cafe:0:0:66::/64 detail
Thu Nov 22 16:12:51.983 EST

L1 cafe:0:0:66::/64 [11/115] low priority
     via fe80::2, TenGigE0/0/0/6, SRv6-HUB6, Weight: 0
      Backup path: TI-LFA (link), via fe80::1, Bundle-Ether1201 SRv6-LF1, Weight: 0, Metric:
 51
         P node: SRv6-TP8.00 [8::8], SRv6 SID: cafe:0:0:88:1:: End (PSP)
         Backup-src: SRv6-HUB6.00
       P: No, TM: 51, LC: No, NP: No, D: No, SRLG: Yes
     src SRv6-HUB6.00-00, 6::6
```

This example shows how to verify the SRv6 IS-IS TI-LFA configuration using the **show route ipv6** *ipv6-prefix* **detail** command.

```
Router# show route ipv6 cafe:0:0:66::/64 detail
Thu Nov 22 16:14:07.385 EST

Routing entry for cafe:0:0:66::/64
  Known via "isis srv6", distance 115, metric 11, type level-1
  Installed Nov 22 09:24:05.160 for 06:50:02
  Routing Descriptor Blocks
    fe80::2, from 6::6, via TenGigE0/0/0/6, Protected
      Route metric is 11
      Label: None
      Tunnel ID: None
      Binding Label: None
      Extended communities count: 0
      Path id:1       Path ref count:0
      NHID:0x2000a(Ref:11)
      NHID eid:0xffffffffffffffff
      SRv6 Headend: H.Insert.Red [base], SRv6 SID-list {cafe:0:0:88:1::}
      Backup path id:65
    fe80::1, from 6::6, via Bundle-Ether1201, Backup (TI-LFA)
```

```
      Repair Node(s): 8::8
      Route metric is 51
      Label: None
      Tunnel ID: None
      Binding Label: None
      Extended communities count: 0
      Path id:65              Path ref count:1
      NHID:0x2000d(Ref:11)
      NHID eid:0xffffffffffffffff
      SRv6 Headend: H.Insert.Red [base], SRv6 SID-list {cafe:0:0:88:1::}
      MPLS eid:0x1380800000001
```

This example shows how to verify the SRv6 IS-IS TI-LFA configuration using the **show cef ipv6** *ipv6-prefix* **detail location** *location* command.

```
Router# show cef  ipv6 cafe:0:0:66::/64 detail location 0/0/cpu0
Thu Nov 22 17:01:58.536 EST
cafe:0:0:66::/64, version 1356, SRv6 Transit, internal 0x1000001 0x2 (ptr 0x8a4a45cc) [1],
 0x0 (0x8a46ae20), 0x0 (0x8c8f31b0)
 Updated Nov 22 09:24:05.166
 local adjacency fe80::2
 Prefix Len 64, traffic index 0, precedence n/a, priority 2
  gateway array (0x8a2dfaf0) reference count 4, flags 0x500000, source rib (7), 0 backups
                [5 type 3 flags 0x8401 (0x8a395d58) ext 0x0 (0x0)]
  LW-LDI[type=3, refc=1, ptr=0x8a46ae20, sh-ldi=0x8a395d58]
  gateway array update type-time 1 Nov 22 09:24:05.163
 LDI Update time Nov 22 09:24:05.163
 LW-LDI-TS Nov 22 09:24:05.166
   via fe80::2/128, TenGigE0/0/0/6, 8 dependencies, weight 0, class 0, protected [flags
0x400]
    path-idx 0 bkup-idx 1 NHID 0x2000a [0x8a2c2fd0 0x0]
    next hop fe80::2/128
   via fe80::1/128, Bundle-Ether1201, 8 dependencies, weight 0, class 0, backup (TI-LFA)
[flags 0xb00]
    path-idx 1 NHID 0x2000d [0x8c2670b0 0x0]
    next hop fe80::1/128, Repair Node(s): 8::8
    local adjacency
     SRv6 H.Insert.Red SID-list {cafe:0:0:88:1::}

    Load distribution: 0 (refcount 5)

    Hash  OK  Interface                 Address
    0     Y   TenGigE0/0/0/6            fe80::2
```

This example shows how to verify the SRv6 IS-IS TI-LFA configuration using the **show cef ipv6 fast-reroute-db** command.

```
Router# show cef ipv6 fast-reroute-db
Sun Dec  9 20:23:08.111 EST

 PROTECT-FRR: per-prefix [1, 0x0, 0x0, 0x98c83270]
 protect-interface: Te0/0/0/6 (0x208)
 protect-next-hop:  fe80::2/128
 ipv6 nhinfo [0x977397d0]
 Update Time Dec  9 17:29:42.427

     BACKUP-FRR: per-prefix [5, 0x0, 0x2, 0x98c83350]
     backup-interface: BE1201 (0x800002c)
     backup-next-hop:  fe80::1/128
     ipv6 nhinfo [0x977396a0 protect-frr: 0x98c83270]
 Update Time Dec  9 17:29:42.428
```

```
PROTECT-FRR: per-prefix [1, 0x0, 0x0, 0x98c830b0]
protect-interface: BE1201 (0x800002c)
protect-next-hop:  fe80::1/128
ipv6 nhinfo [0x977396a0]
Update Time Dec  9 17:29:42.429

    BACKUP-FRR: per-prefix [5, 0x0, 0x1, 0x98c83190]
    backup-interface: Te0/0/0/6 (0x208)
    backup-next-hop:  fe80::2/128
    ipv6 nhinfo [0x977397d0 protect-frr: 0x98c830b0]
Update Time Dec  9 17:29:42.429
```

# Configuring SRv6 IS-IS Microloop Avoidance

This feature introduces support for implementing microloop avoidance using IS-IS SRv6.

Microloops are brief packet loops that occur in the network following a topology change (link down, link up, or metric change events). Microloops are caused by the non-simultaneous convergence of different nodes in the network. If nodes converge and send traffic to a neighbor node that has not converged yet, traffic may be looped between these two nodes, resulting in packet loss, jitter, and out-of-order packets.

The SRv6 Microloop Avoidance feature detects if microloops are possible following a topology change. If a node computes that a microloop could occur on the new topology, the node creates a loop-free SR-TE policy path to the destination using a list of segments. After the RIB update delay timer expires, the SR-TE policy is replaced with regular forwarding paths.

### Restrictions and Usage Guidelines

The following restrictions and usage guidelines apply:

- The Routing Information Base (RIB) update delay value specifies the amount of time the node uses the microloop avoidance policy before updating its forwarding table. The *delay-time* range is from 1 to 60000 milliseconds; the default value is 5000.

### Configuring SRv6 IS-IS Microloop Avoidance

The following example shows how to configure SRv6 IS-IS Microloop Avoidance and set the Routing Information Base (RIB) update delay value.

**Note** Complete the Configuring SRv6 before performing these steps.

```
Router(config)# router isis test-igp
Router(config-isis)# address-family ipv6 unicast
Router(config-isis-af)# microloop avoidance segment-routing
Router(config-isis-af)# microloop avoidance rib-update-delay 2000
Router(config-isis-af)# commit
```

# SRv6 Services: IPv4 L3VPN

*Table 17: Feature History Table*

| Feature Name | Release | Description |
|---|---|---|
| Dual-Stack L3VPN Services (IPv4, IPv6) (SRv6 Base) | Release 7.3.2 | This feature introduces support for Dual-stack (VPNv4/VPNv6) VRFs.<br>VPNv4/VPNv6 Dual-stack supports both IPv4 (End.DT4) and IPv6 (End.DT6) based SRv6 L3VPN service on the same interface, sub-interface, or VRF. |

The SRv6-based IPv4 L3VPN feature enables deployment of IPv4 L3VPN over a SRv6 data plane. Traditionally, it was done over an MPLS-based system. SRv6-based L3VPN uses SRv6 Segment IDs (SIDs) for service segments instead of labels. SRv6-based L3VPN functionality interconnects multiple sites to resemble a private network service over public infrastructure. To use this feature, you must configure SRv6-base.

For this feature, BGP allocates an SRv6 SID from the locator space, configured under SRv6-base and VPNv4 address family. For more information on this, refer Segment Routing over IPv6 Overview, on page 115. The BGP SID can be allocated in the following ways:

- Per-VRF mode that provides End.DT4 support. End.DT4 represents the Endpoint with decapsulation and IPv4 table lookup.
- Per-CE mode that provides End.DX4 cross connect support. End.DX4 represents the Endpoint with decapsulation and IPv4 cross-connect.

BGP encodes the SRv6 SID in the prefix-SID attribute of the IPv4 L3VPN Network Layer Reachability Information (NLRI) and advertises it to IPv6 peering over an SRv6 network. The Ingress PE (provider edge) router encapsulates the VRF IPv4 traffic with the SRv6 VPN SID and sends it over the SRv6 network.

### Usage Guidelines and Limitations

- SRv6 locator can be assigned globally, for all VRFs, for an individual VRF, or per-prefix.
- Equal-Cost Multi-path (ECMP) and Unequal Cost Multipath (UCMP) are supported.
- BGP, OSPF, Static are supported as PE-CE protocol.
- Dual-Stack L3VPN Services (IPv4, IPv6) are supported.
- MPLS L3VPN and SRv6 L3VPN interworking gateway is supported.

### Configuring SRv6 based IPv4 L3VPN

To enable SRv6-based L3VPN, you need to configure SRv6 under BGP and configure the SID allocation mode. The following example shows how to configure SRv6-based L3VPN:

#### Configure SRv6 Locator Under BGP Global

```
RP/0/0/CPU0:Router(config)# router bgp 100
RP/0/0/CPU0:Router(config-bgp)# bgp router-id 10.6.6.6
RP/0/0/CPU0:Router(config-bgp)# segment-routing srv6
RP/0/0/CPU0:Router(config-bgp-srv6)# locator my_locator
RP/0/0/CPU0:Router(config-bgp-srv6)# exit
```

### Configure SRv6 Locator For All VRF Under VPNv4 AFI

```
RP/0/0/CPU0:Router(config)# router bgp 100
RP/0/0/CPU0:Router(config-bgp)# bgp router-id 10.6.6.6
RP/0/0/CPU0:Router(config-bgp)# address-family vpnv4 unicast
RP/0/0/CPU0:Router(config-bgp-af)# vrf all
RP/0/0/CPU0:Router(config-bgp-af-vrfall)# segment-routing srv6
RP/0/0/CPU0:Router(config-bgp-af-vrfall-srv6)# locator my_locator
RP/0/0/CPU0:Router(config-bgp-af-vrfall-srv6)# exit
```

### Configure an Individual VRF with Per-VRF Label Allocation Mode

```
RP/0/0/CPU0:Router(config-bgp-af)# vrf vrf1
RP/0/0/CPU0:Router(config-bgp-vrf)# rd 106:1
RP/0/0/CPU0:Router(config-bgp-vrf)# address-family ipv4 unicast
RP/0/0/CPU0:Router(config-bgp-vrf-af)# segment-routing srv6
RP/0/0/CPU0:Router(config-bgp-vrf-af-srv6)# alloc mode per-vrf
RP/0/0/CPU0:Router(config-bgp-vrf-af-srv6)# exit
RP/0/0/CPU0:Router(config-bgp-vrf-af)# exit
RP/0/0/CPU0:Router(config-bgp-vrf)# neighbor 10.1.2.2
RP/0/0/CPU0:Router(config-bgp-vrf-nbr)# remote-as 100
RP/0/0/CPU0:Router(config-bgp-vrf-nbr)# address-family ipv4 unicast
```

### Configure an Individual VRF with Per-CE Label Allocation Mode

```
RP/0/0/CPU0:Router(config-bgp-af)# vrf vrf2
RP/0/0/CPU0:Router(config-bgp-vrf)# rd 106:2
RP/0/0/CPU0:Router(config-bgp-vrf)# address-family ipv4 unicast
RP/0/0/CPU0:Router(config-bgp-vrf-af)# segment-routing srv6
RP/0/0/CPU0:Router(config-bgp-vrf-af-srv6)# alloc mode per-ce
RP/0/0/CPU0:Router(config-bgp-vrf-af-srv6)# exit
RP/0/0/CPU0:Router(config-bgp-vrf-af)# exit
RP/0/0/CPU0:Router(config-bgp-vrf)# neighbor 10.1.2.2
RP/0/0/CPU0:Router(config-bgp-vrf-nbr)# remote-as 100
RP/0/0/CPU0:Router(config-bgp-vrf-nbr)# address-family ipv4 unicast
```

### Assigning SRv6 Locator for a Specific Prefix

This use case provides the ability to assign a specific SRv6 locator for a given prefix or a set of prefixes. The egress PE advertises the prefix with the specified locator. This allows for per-prefix steering into desired transport behaviors, such as Flex Algo.

To assign an SRv6 locator for a specific prefix, configure a route policy to specify the SID allocation mode based on match criteria. Examples of match criteria are destination-based match or community-based match.

- Supported SID allocation modes are per-VRF and per-CE.
- For per-VRF allocation mode, you can also specify the SRv6 locator.
    - If an SRv6 locator is specified in the route policy, BGP will use that to allocate per-VRF SID. If the specified locator is invalid, the SID will not be allocated.

- If an SRv6 locator is not specified in the route policy, the default locator configured under BGP is used to allocate the SID. If the default locator is not configured, then the SID will not be allocated.

- Per-CE allocation mode always uses the default locator configured under BGP to allocate the SID.

For more information on configuring routing policies, refer to the "Implementing Routing Policy" chapter in the *Routing Configuration Guide for Cisco ASR 9000 Series Routers*.

The following example shows a route policy specifying the SID allocation mode with destination-based match:

```
Node1(config)# route-policy set_per_prefix_locator_rpl
Node1(config-rpl)# if destination in (10.1.1.0/24) then
Node1(config-rpl-if)# set srv6-alloc-mode per-vrf locator locator1
Node1(config-rpl-if)# elseif destination in (2.2.2.0/24) then
Node1(config-rpl-elseif)# set srv6-alloc-mode per-vrf locator locator2
Node1(config-rpl-elseif)# elseif destination in (3.3.3.0/24) then
Node1(config-rpl-elseif)# set srv6-alloc-mode per-vrf
Node1(config-rpl-elseif)# elseif destination in (4.4.4.0/24) then
Node1(config-rpl-elseif)# set srv6-alloc-mode per-ce
Node1(config-rpl-elseif)# else
Node1(config-rpl-else)# drop
Node1(config-rpl-else)# endif
Node1(config-rpl)# end-policy
Node1(config)#
```

To specify per-prefix allocation mode for a specific VRF under IPv4 Address Family, use the following command:

- **router bgp** *as-number* **vrf** *WORD* **address-family ipv4 unicast segment-routing srv6 alloc mode route-policy** *policy_name*

This example shows how to configure per-prefix allocation mode for a specific VRF (vrf_cust1) under IPv4 address family

```
Node1(config)# router bgp 100
Node1(config-bgp)# vrf vrf_cust1
Node1(config-bgp-vrf)# address-family ipv4 unicast
Node1(config-bgp-vrf-af)# segment-routing srv6
Node1(config-bgp-vrf-af-srv6)# alloc mode route-policy set_per_prefix_locator_rpl
```

### Running Configuration

```
route-policy set_per_prefix_locator_rpl
  if destination in (10.1.1.0/24) then
    set srv6-alloc-mode per-vrf locator locator1
  elseif destination in (2.2.2.0/24) then
    set srv6-alloc-mode per-vrf locator locator2
  elseif destination in (3.3.3.0/24) then
    set srv6-alloc-mode per-vrf
  elseif destination in (4.4.4.0/24) then
    set srv6-alloc-mode per-ce
  else
    drop
  endif
end-policy
!
router bgp 100
 vrf vrf_cust1
  address-family ipv6 unicast
   segment-routing srv6
```

```
    alloc mode route-policy set_per_prefix_locator_rpl
   !
  !
 !
!
```

Verify that the local and received SIDs have been correctly allocated under IPv4 address family and specific VRF (vrf_cust1):

```
Node1# show bgp vpnv4 unicast local-sids
BGP router identifier 10.1.1.1, local AS number 100
BGP generic scan interval 60 secs
Non-stop routing is enabled
BGP table state: Active
Table ID: 0x0   RD version: 0
BGP main routing table version 50
BGP NSR Initial initsync version 18 (Reached)
BGP NSR/ISSU Sync-Group versions 0/0
BGP scan interval 60 secs

Status codes: s suppressed, d damped, h history, * valid, > best
              i - internal, r RIB-failure, S stale, N Nexthop-discard
Origin codes: i - IGP, e - EGP, ? - incomplete
   Network            Local Sid                                 Alloc mode   Locator
Route Distinguisher: 8:8
*>i8.8.8.8/32         NO SRv6 Sid                               -            -
* i                   NO SRv6 Sid                               -            -
Route Distinguisher: 10.1.1.1:0 (default for vrf vrf_cust1)
*> 10.1.1.0/24        fc00:0:0:1:40::                             per-vrf      locator1
*> 2.2.2.0/24         fc00:0:8:1:40::                             per-vrf      locator2
*> 3.3.3.0/24         fc00:0:9:1:40::                             per-vrf      locator4
*> 4.4.4.0/24         fc00:0:9:1:41::                             per-ce       locator4
*> 10.1.1.5/32        NO SRv6 Sid                               -            -
*> 3.3.3.3/32         NO SRv6 Sid                               -            -
*>i8.8.8.8/32         NO SRv6 Sid                               -            -


Node1# show bgp vpnv4 unicast received-sids
BGP router identifier 10.1.1.1, local AS number 100
BGP generic scan interval 60 secs
Non-stop routing is enabled
BGP table state: Active
Table ID: 0x0   RD version: 0
BGP main routing table version 50
BGP NSR Initial initsync version 18 (Reached)
BGP NSR/ISSU Sync-Group versions 0/0
BGP scan interval 60 secs

Status codes: s suppressed, d damped, h history, * valid, > best
              i - internal, r RIB-failure, S stale, N Nexthop-discard
Origin codes: i - IGP, e - EGP, ? - incomplete
   Network            Next Hop                            Received Sid
Route Distinguisher: 8:8
*>i8.8.8.8/32         10.1.1.2                            fc00:0:0:2:42::
* i                   2400:2020:42:2fff::1
                                                          fc00:0:0:2:42::
Route Distinguisher: 10.1.1.1:0 (default for vrf vrf_cust1)
*> 10.1.1.0/24        11.1.1.2                            NO SRv6 Sid
*> 2.2.2.0/24         11.1.1.2                            NO SRv6 Sid
*> 3.3.3.0/24         11.1.1.2                            NO SRv6 Sid
*> 4.4.4.0/24         11.1.1.2                            NO SRv6 Sid
*> 10.1.1.5/32        11.1.1.2                            NO SRv6 Sid
*> 3.3.3.3/32         13.2.2.2                            NO SRv6 Sid
*>i8.8.8.8/32         10.1.1.2                            fc00:0:0:2:42::
```

```
Node1# show bgp vrf vrf_cust1 local-sids
BGP VRF vrf_cust1, state: Active
BGP Route Distinguisher: 10.1.1.1:0
VRF ID: 0x60000004
BGP router identifier 10.1.1.1, local AS number 1
Non-stop routing is enabled
BGP table state: Active
Table ID: 0xe0000013   RD version: 37
BGP main routing table version 37
BGP NSR Initial initsync version 18 (Reached)
BGP NSR/ISSU Sync-Group versions 0/0

Status codes: s suppressed, d damped, h history, * valid, > best
              i - internal, r RIB-failure, S stale, N Nexthop-discard
Origin codes: i - IGP, e - EGP, ? - incomplete
   Network            Local Sid                                 Alloc mode   Locator
Route Distinguisher: 10.1.1.1:0 (default for vrf vrf_cust1)
*> 10.1.1.0/24        fc00:0:0:1:40::                           per-vrf      locator1
*> 2.2.2.0/24         fc00:0:8:1:40::                           per-vrf      locator2
*> 3.3.3.0/24         fc00:0:9:1:40::                           per-vrf      locator4
*> 4.4.4.0/24         fc00:0:9:1:41::                           per-ce       locator4
*> 10.1.1.5/32        NO SRv6 Sid                               -            -
*> 3.3.3.3/32         NO SRv6 Sid                               -            -
*>i8.8.8.8/32         NO SRv6 Sid                               -            -


Node1# show bgp vrf vrf_cust1 received-sids
BGP VRF vrf_cust1, state: Active
BGP Route Distinguisher: 10.1.1.1:0
VRF ID: 0x60000004
BGP router identifier 10.1.1.1, local AS number 1
Non-stop routing is enabled
BGP table state: Active
Table ID: 0xe0000013   RD version: 37
BGP main routing table version 37
BGP NSR Initial initsync version 18 (Reached)
BGP NSR/ISSU Sync-Group versions 0/0

Status codes: s suppressed, d damped, h history, * valid, > best
              i - internal, r RIB-failure, S stale, N Nexthop-discard
Origin codes: i - IGP, e - EGP, ? - incomplete
   Network            Next Hop                            Received Sid
Route Distinguisher: 10.1.1.1:0 (default for vrf vrf_cust1)
*> 10.1.1.0/24        11.1.1.2                            NO SRv6 Sid
*> 2.2.2.0/24         11.1.1.2                            NO SRv6 Sid
*> 3.3.3.0/24         11.1.1.2                            NO SRv6 Sid
*> 4.4.4.0/24         11.1.1.2                            NO SRv6 Sid
*> 10.1.1.5/32        11.1.1.2                            NO SRv6 Sid
*> 3.3.3.3/32         13.2.2.2                            NO SRv6 Sid
*>i8.8.8.8/32         10.1.1.2                            fc00:0:0:2:42::
```

### Verification

The following example shows how to verify the SRv6 based L3VPN configuration using the **show segment-routing srv6 sid** command.

In this example, End.X represents Endpoint function with Layer-3 cross-connect, End.DT4 represents Endpoint with decapsulation and IPv4 table lookup, and End.DX4 represents Endpoint with decapsulation and IPv4 cross-connect.

```
 RP/0/0/CPU0:SRv6-Hub6# show segment-routing srv6 sid
*** Locator: 'my_locator' ***
SID                         Function     Context                          Owner
     State  RW
```

```
-------------------------  -----------  ------------------------------   ------------------
  -----  --
cafe:0:0:66:1::            End (PSP)    'my_locator':1                    sidmgr
     InUse  Y
cafe:0:0:66:40::           End.X (PSP)  [Te0/0/0/2, Link-Local]           isis-srv6
     InUse  Y
cafe:0:0:66:41::           End.X (PSP)  [BE6801, Link-Local]              isis-srv6
     InUse  Y
cafe:0:0:66:42::           End.X (PSP)  [BE5601, Link-Local]              isis-srv6
     InUse  Y
cafe:0:0:66:43::           End.X (PSP)  [BE5602, Link-Local]              isis-srv6
     InUse  Y
cafe:0:0:66:44::           End.DT4      'VRF1'                            bgp-100
     InUse  Y
cafe:0:0:66:45::           End.DT4      'VRF2'                            bgp-100
     InUse  Y
cafe:0:0:66:46::           End.DX4      'VRF2':3                          bgp-100
     InUse  Y
cafe:0:0:66:47::           End.DX4      'VRF2':4                          bgp-100
     InUse  Y
```

The following example shows how to verify the SRv6 based L3VPN configuration using the **show segment-routing srv6***SID-prefix***detail** command.

```
RP/0/RP0/CPU0:SRv6-Hub6# show segment-routing srv6 sid cafe:0:0:66:44:: detail
Sun Dec  9 16:52:54.015 EST
*** Locator: 'my_locator' ***
SID                        Function     Context                           Owner
     State  RW
-------------------------  -----------  ------------------------------   ------------------
  -----  --
cafe:0:0:66:44::           End.DT4      'VRF1'                            bgp-100
     InUse  Y
  SID context: { table-id=0xe0000001 ('VRF1':IPv4/Unicast) }
  Locator: 'my_locator'
  Allocation type: Dynamic
  Created: Dec  8 16:34:32.506 (1d00h ago)

RP/0/RP0/CPU0:SRv6-Hub6# show segment-routing srv6 sid cafe:0:0:66:47:: detail
Sun Dec  9 16:54:26.073 EST
*** Locator: 'my_locator' ***
SID                        Function     Context                           Owner
     State  RW
-------------------------  -----------  ------------------------------   ------------------
  -----  --
cafe:0:0:66:47::           End.DX4      'VRF2':4                          bgp-100
     InUse  Y
  SID context: { table-id=0xe0000002 ('VRF2':IPv4/Unicast), nh-set-id=4 }
  Locator: 'my_locator'
  Allocation type: Dynamic
  Created: Dec  9 16:49:44.714 (00:04:41 ago)
```

The following example shows how to verify the SRv6 based L3VPN configuration using the **show bgp vpnv4 unicast rd***route-distinguisher/prefix* command on Egress PE.

```
RP/0/RP0/CPU0:SRv6-Hub6# show bgp vpnv4 unicast rd 106:1 10.15.0.0/30
Wed Nov 21 16:08:44.765 EST
BGP routing table entry for 10.15.0.0/30, Route Distinguisher: 106:1
Versions:
  Process           bRIB/RIB  SendTblVer
  Speaker            2282449     2282449
    SRv6-VPN SID: cafe:0:0:66:44::/128
```

```
Last Modified: Nov 21 15:50:34.235 for 00:18:10
Paths: (2 available, best #1)
  Advertised to peers (in unique update groups):
    2::2
  Path #1: Received by speaker 0
  Advertised to peers (in unique update groups):
    2::2
  200
    10.1.2.2 from 10.1.2.2  (10.7.0.1)
      Origin IGP, localpref 200, valid, internal, best, group-best, import-candidate
      Received Path ID 0, Local Path ID 1, version 2276228
      Extended community: RT:201:1
  Path #2: Received by speaker 0
  Not advertised to any peer
  200
    10.2.2.2 from 10.2.2.2 (10.20.1.2)
      Origin IGP, localpref 100, valid, internal
      Received Path ID 0, Local Path ID 0, version 0
      Extended community: RT:201:1
```

The following example shows how to verify the SRv6 based L3VPN configuration using the **show bgp vpnv4 unicast rd***route-distinguisher prefix* command on Ingress PE.

```
RP/0/RP0/CPU0:SRv6-LF1# show bgp vpnv4 unicast rd 106:1 10.15.0.0/30
Wed Nov 21 16:11:45.538 EST
BGP routing table entry for 10.15.0.0/30, Route Distinguisher: 106:1
Versions:
  Process           bRIB/RIB  SendTblVer
  Speaker            2286222     2286222
Last Modified: Nov 21 15:47:26.288 for 00:24:19
Paths: (1 available, best #1)
  Not advertised to any peer
  Path #1: Received by speaker 0
  Not advertised to any peer
  200, (received & used)
    6::6 (metric 24) from 2::2 (6.6.6.6)
      Received Label 3
      Origin IGP, localpref 200, valid, internal, best, group-best, import-candidate,
not-in-vrf
      Received Path ID 1, Local Path ID 1, version 2286222
      Extended community: RT:201:1
      Originator: 6.6.6.6, Cluster list: 2.2.2.2
      SRv6-VPN-SID: T1-cafe:0:0:66:44:: [total 1]
```

The following example shows how to verify the SRv6 based L3VPN configuration using the **show route vrf***vrf-name/prefix***detail** command.

```
RP/0/RP0/CPU0:SRv6-LF1# show route vrf VRF1 10.15.0.0/30 detail
Wed Nov 21 16:35:17.775 EST
Routing entry for 10.15.0.0/30
  Known via "bgp 100", distance 200, metric 0
  Tag 200, type internal
  Installed Nov 21 16:35:14.107 for 00:00:03
  Routing Descriptor Blocks
    6::6, from 2::2
      Nexthop in Vrf: "default", Table: "default", IPv6 Unicast, Table Id: 0xe0800000
      Route metric is 0
      Label: None
      Tunnel ID: None
      Binding Label: None
      Extended communities count: 0
      Source RD attributes: 0x0000:106:1
      NHID:0x0(Ref:0)
```

```
      SRv6 Headend: H.Encaps.Red [base], SID-list { cafe:0:0:66:44:: }
      MPLS eid:0x1380600000001
  Route version is 0xd (13)
  No local label
  IP Precedence: Not Set
  QoS Group ID: Not Set
  Flow-tag: Not Set
  Fwd-class: Not Set
  Route Priority: RIB_PRIORITY_RECURSIVE (12) SVD Type RIB_SVD_TYPE_REMOTE
  Download Priority 3, Download Version 3038384
  No advertising protos.
```

The following example shows how to verify the SRv6 based L3VPN configuration for per-ce allocation mode using the **show bgp vrf***vrf-name***nexthop-set** command.

```
RP/0/RP0/CPU0:SRv6-Hub6# show bgp vrf VRF2 nexthop-set
Wed Nov 21 15:52:17.464 EST
 Resilient per-CE nexthop set, ID 3
 Number of nexthops 1, Label 0, Flags 0x2200
 SRv6-VPN SID: cafe:0:0:66:46::/128
 Nexthops:
10.1.2.2
 Reference count 1,
 Resilient per-CE nexthop set, ID 4
 Number of nexthops 2, Label 0, Flags 0x2100
 SRv6-VPN SID: cafe:0:0:66:47::/128
 Nexthops:
 10.1.2.2
 10.2.2.2
Reference count 2,
```

The following example shows how to verify the SRv6 based L3VPN configuration using the **show cef vrf***vrf-name prefix* **detail location***line-card* command.

```
RP/0/RP0/CPU0:SRv6-LF1# show cef vrf VRF1 10.15.0.0/30 detail location 0/0/cpu0
Wed Nov 21 16:37:06.894 EST
151.1.0.0/30, version 3038384, SRv6 Transit, internal 0x5000001 0x0 (ptr 0x9ae6474c) [1],
0x0 (0x0), 0x0 (0x8c11b238)
 Updated Nov 21 16:35:14.109
 Prefix Len 30, traffic index 0, precedence n/a, priority 3
  gateway array (0x8cd85190) reference count 1014, flags 0x2010, source rib (7), 0 backups
                [1 type 3 flags 0x40441 (0x8a529798) ext 0x0 (0x0)]
  LW-LDI[type=0, refc=0, ptr=0x0, sh-ldi=0x0]
  gateway array update type-time 1 Nov 21 14:47:26.816
 LDI Update time Nov 21 14:52:53.073
  Level 1 - Load distribution: 0
  [0] via cafe:0:0:66::/128, recursive
   via cafe:0:0:66::/128, 7 dependencies, recursive [flags 0x6000]
    path-idx 0 NHID 0x0 [0x8acb53cc 0x0]
    next hop VRF - 'default', table - 0xe0800000
    next hop cafe:0:0:66::/128 via cafe:0:0:66::/64
     SRv6 H.Encaps.Red SID-list {cafe:0:0:66:44::}
    Load distribution: 0 (refcount 1)
    Hash  OK  Interface                Address
    0     Y   Bundle-Ether1201         fe80::2
```

# SRv6 Services: IPv6 L3VPN

Building on the messages and procedures defined in IETF draft "BGP/MPLS IP Virtual Private Networks (VPNs)", this feature provides IPv6 L3VPNs (VPNv6) over an SRv6 network.

In SRv6-based L3VPNs, the egress PE signals an SRv6 Service SID with the BGP overlay service route. The ingress PE encapsulates the IPv4/IPv6 payload in an outer IPv6 header where the destination address is the SRv6 Service SID provided by the egress PE. BGP messages between PEs carry SRv6 Service SIDs as a means to interconnect PEs and form VPNs.

SRv6 Service SID refers to a segment identifier associated with one of the SRv6 service-specific behaviors on the advertising VPNv6 PE router, such as END.DT6 (Endpoint with decapsulation and IPv6 table lookup) behaviors.

Based on the messages and procedures defined in IETF draft "SRv6 BGP based Overlay services", BGP encodes the SRv6 Service SID in the prefix-SID attribute of the IPv6 L3VPN Network Layer Reachability Information (NLRI) and advertises it to its IPv6 BGP peers.

BGP allocates an SRv6 Service SID from the locator space, configured under SRv6 and VPNv6 address family. For more information on this, see Segment Routing over IPv6 Overview. The SRv6 Service SID can be allocated in the following ways:

- Per-VRF mode that provides End.DT6 support. End.DT6 represents the Endpoint with decapsulation and IPv6 table lookup.

### Usage Guidelines and Restrictions

- SRv6 locator can be assigned globally, for all VRFs, for an individual VRF, or per-prefix.
- Equal-Cost Multi-path (ECMP) and Unequal Cost Multipath (UCMP) are supported.
- BGP, OSPF, Static are supported as PE-CE protocol.
- Dual-Stack L3VPN Services (IPv4, IPv6) are supported.
- MPLS L3VPN and SRv6 L3VPN interworking gateway is supported.

### Configuring SRv6-based IPv6 L3VPN

To enable SRv6-based L3VPN, you need to configure SRv6 under BGP and configure the SID allocation mode.

The following examples show how to configure SRv6-based L3VPN.

#### Configure SRv6 Locator Under BGP Global

This example shows how to configure the SRv6 locator name under BGP Global:

```
RP/0/0/CPU0:Node1(config)# router bgp 100
RP/0/0/CPU0:Node1(config-bgp)# segment-routing srv6
RP/0/0/CPU0:Node1(config-bgp-gbl-srv6)# locator Node1-locator
RP/0/0/CPU0:Node1(config-bgp-gbl-srv6)# exit
RP/0/0/CPU0:Node1(config-bgp)# address-family vpnv6 unicast
RP/0/0/CPU0:Node1(config-bgp-af)# exit
RP/0/0/CPU0:Node1(config-bgp)# neighbor 3001::1:1:1:4
RP/0/0/CPU0:Node1(config-bgp-nbr)# remote-as 100
RP/0/0/CPU0:Node1(config-bgp-nbr)# address-family vpnv6 unicast
```

```
RP/0/0/CPU0:Node1(config-bgp-nbr-af)# exit
RP/0/0/CPU0:Node1(config-bgp-nbr)# exit
RP/0/0/CPU0:Node1(config-bgp)# vrf vrf_cust6
RP/0/0/CPU0:Node1(config-bgp-vrf)# rd 100:6
RP/0/0/CPU0:Node1(config-bgp-vrf)# address-family ipv6 unicast
RP/0/0/CPU0:Node1(config-bgp-vrf-af)# commit
```

### Running Configuration

```
router bgp 100
 segment-routing srv6
  locator Node1-locator
 !
 address-family vpnv6 unicast
 !
 neighbor 3001::1:1:1:4
  remote-as 100
  address-family vpnv6 unicast
  !
 !
 vrf vrf_cust6
  rd 100:6
  address-family ipv6 unicast
  !
 !
!
end
```

### Configure SRv6 Locator For All VRF Under VPNv6 AFI

This example shows how to configure the SRv6 locator for all VRFs under VPNv6 address family, with per-VRF label allocation mode:

```
RP/0/0/CPU0:Node1(config)# router bgp 100
RP/0/0/CPU0:Node1(config-bgp)# address-family vpnv6 unicast
RP/0/0/CPU0:Node1(config-bgp-af)# vrf all
RP/0/0/CPU0:Node1(config-bgp-af-vrfall)# segment-routing srv6
RP/0/0/CPU0:Node1(config-bgp-af-vrfall-srv6)# locator Node1-locator
RP/0/0/CPU0:Node1(config-bgp-af-vrfall-srv6)# alloc mode per-vrf
RP/0/0/CPU0:Node1(config-bgp-af-vrfall-srv6)# exit
RP/0/0/CPU0:Node1(config-bgp-af-vrfall)# exit
RP/0/0/CPU0:Node1(config-bgp-af)# exit
RP/0/0/CPU0:Node1(config-bgp)# neighbor 3001::1:1:1:4
RP/0/0/CPU0:Node1(config-bgp-nbr)# remote-as 100
RP/0/0/CPU0:Node1(config-bgp-nbr)# address-family vpnv6 unicast
RP/0/0/CPU0:Node1(config-bgp-nbr-af)# exit
RP/0/0/CPU0:Node1(config-bgp-nbr)# exit
RP/0/0/CPU0:Node1(config-bgp)# vrf vrf_cust6
RP/0/0/CPU0:Node1(config-bgp-vrf)# rd 100:6
RP/0/0/CPU0:Node1(config-bgp-vrf)# address-family ipv6 unicast
RP/0/0/CPU0:Node1(config-bgp-vrf-af)# commit
```

### Running Configuration

```
router bgp 100
 address-family vpnv6 unicast
  vrf all
   segment-routing srv6
    locator Node1-locator
    alloc mode per-vrf
   !
  !
```

```
 !
 neighbor 3001::1:1:1:4
  remote-as 100
  address-family vpnv6 unicast
  !
 !
 vrf vrf_cust6
  rd 100:6
  address-family ipv6 unicast
  !
 !
!
end
```

### Configure an Individual VRF with Per-VRF Label Allocation Mode

This example shows how to configure the SRv6 locator for an individual VRF, with per-VRF label allocation mode:

```
RP/0/0/CPU0:Node1(config)# router bgp 100
RP/0/0/CPU0:Node1(config-bgp)# address-family vpnv6 unicast
RP/0/0/CPU0:Node1(config-bgp-af)# exit
RP/0/0/CPU0:Node1(config-bgp)# neighbor 3001::1:1:1:4
RP/0/0/CPU0:Node1(config-bgp-nbr)# remote-as 100
RP/0/0/CPU0:Node1(config-bgp-nbr)# address-family vpnv6 unicast
RP/0/0/CPU0:Node1(config-bgp-nbr-af)# exit
RP/0/0/CPU0:Node1(config-bgp-nbr)# exit
RP/0/0/CPU0:Node1(config-bgp)# vrf vrf_cust6
RP/0/0/CPU0:Node1(config-bgp-vrf)# rd 100:6
RP/0/0/CPU0:Node1(config-bgp-vrf)# address-family ipv6 unicast
RP/0/0/CPU0:Node1(config-bgp-vrf-af)# segment-routing srv6
RP/0/0/CPU0:Node1(config-bgp-vrf-af-srv6)# locator Node1-locator
RP/0/0/CPU0:Node1(config-bgp-vrf-af-srv6)# alloc mode per-vrf
RP/0/0/CPU0:Node1(config-bgp-vrf-af-srv6)# commit
```

### Running Configuration

```
router bgp 100
 address-family vpnv6 unicast
 !
 neighbor 3001::1:1:1:4
  remote-as 100
  address-family vpnv6 unicast
  !
 !
 vrf vrf_cust6
  rd 100:6
  address-family ipv6 unicast
   segment-routing srv6
    locator Node1-locator
    alloc mode per-vrf
   !
  !
 !
!
end
```

### Assigning SRv6 Locator for a Specific Prefix

This use case provides the ability to assign a specific SRv6 locator for a given prefix or a set of prefixes. The egress PE advertises the prefix with the specified locator. This allows for per-prefix steering into desired transport behaviors, such as Flex Algo.

To assign an SRv6 locator for a specific prefix, configure a route policy to specify the SID allocation mode based on match criteria. Examples of match criteria are destination-based match or community-based match.

- Supported SID allocation modes are per-VRF and per-CE.
- For per-VRF allocation mode, you can also specify the SRv6 locator.
  - If an SRv6 locator is specified in the route policy, BGP will use that to allocate per-VRF SID. If the specified locator is invalid, the SID will not be allocated.
  - If an SRv6 locator is not specified in the route policy, the default locator is used to allocate the SID. If the default locator is not configured in BGP, then the SID will not be allocated.
- Per-CE allocation mode always uses the default locator to allocate the SID.

The following example shows a route policy specifying the SID allocation mode with destination-based match:

```
Node1(config)# route-policy set_per_prefix_locator_rpl
Node1(config-rpl)# if destination in (3001::1:1:1:1/128) then
Node1(config-rpl-if)# set srv6-alloc-mode per-vrf locator locator1
Node1(config-rpl-if)# elseif destination in (3001::2:2:2:2/128) then
Node1(config-rpl-elseif)# set srv6-alloc-mode per-vrf locator locator2
Node1(config-rpl-elseif)# elseif destination in (3001::3:3:3:3/128) then
Node1(config-rpl-elseif)# set srv6-alloc-mode per-vrf
Node1(config-rpl-elseif)# elseif destination in (3001::4:4:4:4/128) then
Node1(config-rpl-elseif)# set srv6-alloc-mode per-ce
Node1(config-rpl-elseif)# else
Node1(config-rpl-else)# drop
Node1(config-rpl-else)# endif
Node1(config-rpl)# end-policy
```

To specify per-prefix allocation mode for a specific VRF under IPv6 Address Family, use the following command:

- **router bgp** *as-number* **vrf** *WORD* **address-family ipv6 unicast segment-routing srv6 alloc mode route-policy** *policy_name*

This example shows how to specify per-prefix allocation mode for a specific VRF (vrf_cust1) under the IPv6 address family:

```
Node1(config)# router bgp 100
Node1(config-bgp)# vrf vrf_cust6
Node1(config-bgp-vrf)# address-family ipv6 unicast
Node1(config-bgp-vrf-af)# segment-routing srv6
Node1(config-bgp-vrf-af-srv6)# alloc mode route-policy set_per_prefix_locator_rpl
```

### Running Configuration

```
route-policy set_per_prefix_locator_rpl
  if destination in (3001::1:1:1:1/128) then
    set srv6-alloc-mode per-vrf locator locator1
  elseif destination in (3001::2:2:2:2/128) then
    set srv6-alloc-mode per-vrf locator locator2
  elseif destination in (3001::3:3:3:3/128) then
    set srv6-alloc-mode per-vrf
  elseif destination in (3001::4:4:4:4/128) then
    set srv6-alloc-mode per-ce
  else
    drop
  endif
```

```
end-policy
!
router bgp 100
 vrf vrf_cust6
  address-family ipv6 unicast
   segment-routing srv6
    alloc mode route-policy set_per_prefix_locator_rpl
   !
  !
 !
!
```

Verify that the local and received SIDs have been correctly allocated under IPv6 address family and specific VRF (vrf_cust6):

```
Node1# show bgp vpnv6 unicast local-sids

BGP router identifier 10.1.1.1, local AS number 1
BGP generic scan interval 60 secs
Non-stop routing is enabled
BGP table state: Active
Table ID: 0x0   RD version: 0
BGP main routing table version 50
BGP NSR Initial initsync version 18 (Reached)
BGP NSR/ISSU Sync-Group versions 0/0
BGP scan interval 60 secs

Status codes: s suppressed, d damped, h history, * valid, > best
              i - internal, r RIB-failure, S stale, N Nexthop-discard
Origin codes: i - IGP, e - EGP, ? - incomplete
   Network            Local Sid                                   Alloc mode   Locator
Route Distinguisher: 8:8
*>i3008::8:8:8:8/128  NO SRv6 Sid                                  -            -
* i                  NO SRv6 Sid                                  -            -
Route Distinguisher: 10.1.1.1:0 (default for vrf vrf_cust6)
*> 3001::1:1:1:1/128  fc00:0:0:1:40::                              per-vrf      locator1
*> 3001::2:2:2:2/128  fc00:0:8:1:40::                              per-vrf      locator2
*> 3001::3:3:3:3/128  fc00:0:9:1:40::                              per-vrf      locator4
*> 3001::4:4:4:4/128  fc00:0:9:1:41::                              per-ce       locator4
*> 3001::5:5:5:5/128  NO SRv6 Sid                                  -            -
*> 3001::12:1:1:5/128 NO SRv6 Sid                                  -            -
*>i3008::8:8:8:8/128  NO SRv6 Sid                                  -            -


Node1# show bgp vpnv6 unicast received-sids

BGP router identifier 10.1.1.1, local AS number 1
BGP generic scan interval 60 secs
Non-stop routing is enabled
BGP table state: Active
Table ID: 0x0   RD version: 0
BGP main routing table version 50
BGP NSR Initial initsync version 18 (Reached)
BGP NSR/ISSU Sync-Group versions 0/0
BGP scan interval 60 secs

Status codes: s suppressed, d damped, h history, * valid, > best
              i - internal, r RIB-failure, S stale, N Nexthop-discard
Origin codes: i - IGP, e - EGP, ? - incomplete
   Network            Next Hop                            Received Sid
Route Distinguisher: 8:8
*>i8.8.8.8/32         10.1.1.2                            fc00:0:0:2:42::
* i                  2400:2020:42:2fff::1
                                                          fc00:0:0:2:42::
Route Distinguisher: 10.1.1.1:0 (default for vrf vrf_cust6)
```

```
*> 3001::1:1:1:1/128  11.1.1.2                          NO SRv6 Sid
*> 3001::2:2:2:2/128  11.1.1.2                          NO SRv6 Sid
*> 3001::3:3:3:3/128  11.1.1.2                          NO SRv6 Sid
*> 3001::4:4:4:4/128  11.1.1.2                          NO SRv6 Sid
*> 3001::5:5:5:5/128  11.1.1.2                          NO SRv6 Sid
*> 3001::12:1:1:5/128 13.2.2.2                          NO SRv6 Sid
*>i3008::8:8:8:8/128  10.1.1.2                          fc00:0:0:2:42::
```

### Verification

The following examples shows how to verify the SRv6 based L3VPN configurations for an Individual VRF with per VRF label allocation mode.

In this example, End.X represents Endpoint function with Layer-3 cross-connect, and End.DT6 represents Endpoint with decapsulation and IPv6 table lookup.

```
RP/0/RSP0/CPU0:Node1# show segment-routing srv6 sid
Fri Jan 15 18:58:04.911 UTC

*** Locator: 'Node1-locator' ***

SID                         Behavior          Context                          Owner
          State  RW
--------------------------  ----------------  ------------------------------
------------------  -----  --
cafe:0:0:1:1::              End (PSP)         'default':1                      sidmgr
          InUse  Y
cafe:0:0:1:40::             End.X (PSP)       [Hu0/0/0/0, Link-Local]          isis-1
          InUse  Y
cafe:0:0:1:41::             End.X (PSP)       [Hu0/0/0/1, Link-Local]          isis-1
          InUse  Y
cafe:0:0:1:47::             End.X (PSP)       [Hu0/0/0/0, Link-Local]:P        isis-1
          InUse  Y
cafe:0:0:1:48::             End.X (PSP)       [Hu0/0/0/1, Link-Local]:P        isis-1
          InUse  Y
cafe:0:0:1:49::             End.DT6           'default'                        bgp-100
          InUse  Y
cafe:0:0:1:4a::             End.DT6           'vrf_cust6'                      bgp-100
          InUse  Y
```

The following examples show how to verify the SRv6 based L3VPN configuration using the **show bgp vpnv6 unicast** commands on the Ingress PE.

```
RP/0/RSP0/CPU0:Node1# show bgp vpnv6 unicast summary
Fri Jan 15 18:37:04.791 UTC
BGP router identifier 10.1.1.1, local AS number 100
BGP generic scan interval 60 secs
Non-stop routing is enabled
BGP table state: Active
Table ID: 0x0   RD version: 0
BGP main routing table version 21
BGP NSR Initial initsync version 4 (Reached)
BGP NSR/ISSU Sync-Group versions 0/0
BGP scan interval 60 secs

BGP is operating in STANDALONE mode.


Process       RcvTblVer   bRIB/RIB   LabelVer  ImportVer  SendTblVer  StandbyVer
Speaker              21         21         21         21          21           0

Neighbor        Spk    AS MsgRcvd MsgSent   TblVer  InQ OutQ  Up/Down  St/PfxRcd
```

```
3001::1:1:1:4     0   100    1352    1352       21    0    0 01:46:26          1
3001::1:1:1:5     0   100    1351    1351       21    0    0 01:44:47          1

RP/0/RSP0/CPU0:Node1# show bgp vpnv6 unicast rd 100:6
Fri Jan 15 18:38:02.919 UTC
BGP router identifier 10.1.1.1, local AS number 100
BGP generic scan interval 60 secs
Non-stop routing is enabled
BGP table state: Active
Table ID: 0x0   RD version: 0
BGP main routing table version 21
BGP NSR Initial initsync version 4 (Reached)
BGP NSR/ISSU Sync-Group versions 0/0
BGP scan interval 60 secs

Status codes: s suppressed, d damped, h history, * valid, > best
              i - internal, r RIB-failure, S stale, N Nexthop-discard
Origin codes: i - IGP, e - EGP, ? - incomplete
   Network            Next Hop            Metric LocPrf Weight Path
Route Distinguisher: 100:6 (default for vrf vrf_cust6)
*> 3001::12:1:1:1/128 ::                       0         32768 ?
*>i3001::12:1:1:4/128 3001::1:1:1:4            0    100      0 ?
*>i3001::12:1:1:5/128 3001::1:1:1:5            0    100      0 ?

Processed 3 prefixes, 3 paths

RP/0/RSP0/CPU0:Node1# show bgp vpnv6 unicast rd 100:6 3001::12:1:1:4/128
Fri Jan 15 18:38:26.492 UTC
BGP routing table entry for 3001::12:1:1:4/128, Route Distinguisher: 100:6
Versions:
  Process           bRIB/RIB  SendTblVer
  Speaker                 17          17
Last Modified: Jan 15 16:50:44.032 for 01:47:43
Paths: (1 available, best #1)
  Not advertised to any peer
  Path #1: Received by speaker 0
  Not advertised to any peer
  Local, (received & used)
    3001::1:1:1:4 (metric 30) from 3001::1:1:1:4 (10.1.1.4)
      Received Label 0x4900
      Origin incomplete, metric 0, localpref 100, valid, internal, best, group-best,
import-candidate, imported
      Received Path ID 0, Local Path ID 1, version 17
      Extended community: RT:100:6
      PSID-Type:L3, SubTLV Count:1
       SubTLV:
        T:1(Sid information), Sid:cafe:0:0:4::, Behavior:18, SS-TLV Count:1
         SubSubTLV:
          T:1(Sid structure):
      Source AFI: VPNv6 Unicast, Source VRF: vrf_cust6, Source Route Distinguisher: 100:6
```

The following examples show how to verify the BGP prefix information for VRF instances:

```
RP/0/RSP0/CPU0:Node1# show bgp vrf vrf_cust6 ipv6 unicast
Fri Jan 15 18:38:49.705 UTC
BGP VRF vrf_cust6, state: Active
BGP Route Distinguisher: 100:6
VRF ID: 0x60000008
BGP router identifier 10.1.1.1, local AS number 100
Non-stop routing is enabled
BGP table state: Active
Table ID: 0xe0800017   RD version: 21
BGP main routing table version 21
BGP NSR Initial initsync version 4 (Reached)
```

```
BGP NSR/ISSU Sync-Group versions 0/0

Status codes: s suppressed, d damped, h history, * valid, > best
              i - internal, r RIB-failure, S stale, N Nexthop-discard
Origin codes: i - IGP, e - EGP, ? - incomplete
   Network            Next Hop            Metric LocPrf Weight Path
Route Distinguisher: 100:6 (default for vrf vrf_cust6)
*> 3001::12:1:1:1/128 ::                        0         32768 ?
*>i3001::12:1:1:4/128 3001::1:1:1:4             0    100      0 ?
*>i3001::12:1:1:5/128 3001::1:1:1:5             0    100      0 ?

Processed 3 prefixes, 3 paths

RP/0/RSP0/CPU0:Node1# show bgp vrf vrf_cust6 ipv6 unicast 3001::12:1:1:4/128
Fri Jan 15 18:39:05.115 UTC
BGP routing table entry for 3001::12:1:1:4/128, Route Distinguisher: 100:6
Versions:
  Process           bRIB/RIB  SendTblVer
  Speaker                 17          17
Last Modified: Jan 15 16:50:44.032 for 01:48:21
Paths: (1 available, best #1)
  Not advertised to any peer
  Path #1: Received by speaker 0
  Not advertised to any peer
  Local, (received & used)
    3001::1:1:1:4 (metric 30) from 3001::1:1:1:4 (10.1.1.4)
      Received Label 0x4900
      Origin incomplete, metric 0, localpref 100, valid, internal, best, group-best,
import-candidate, imported
      Received Path ID 0, Local Path ID 1, version 17
      Extended community: RT:100:6
      PSID-Type:L3, SubTLV Count:1
       SubTLV:
        T:1(Sid information), Sid:cafe:0:0:4::, Behavior:18, SS-TLV Count:1
         SubSubTLV:
          T:1(Sid structure):
      Source AFI: VPNv6 Unicast, Source VRF: vrf_cust6, Source Route Distinguisher: 100:6
```

The following examples show how to verify the current routes in the Routing Information Base (RIB):

```
RP/0/RSP0/CPU0:Node1# show route vrf vrf_cust6 ipv6 unicast
Fri Jan 15 18:39:20.619 UTC

Codes: C - connected, S - static, R - RIP, B - BGP, (>) - Diversion path
       D - EIGRP, EX - EIGRP external, O - OSPF, IA - OSPF inter area
       N1 - OSPF NSSA external type 1, N2 - OSPF NSSA external type 2
       E1 - OSPF external type 1, E2 - OSPF external type 2, E - EGP
       i - ISIS, L1 - IS-IS level-1, L2 - IS-IS level-2
       ia - IS-IS inter area, su - IS-IS summary null, * - candidate default
       U - per-user static route, o - ODR, L - local, G  - DAGR, l - LISP
       A - access/subscriber, a - Application route
       M - mobile route, r - RPL, t - Traffic Engineering, (!) - FRR Backup path

Gateway of last resort is not set

L    3001::12:1:1:1/128 is directly connected,
      21:14:10, Loopback105
B    3001::12:1:1:4/128
      [200/0] via 3001::1:1:1:4 (nexthop in vrf default), 01:48:36
B    3001::12:1:1:5/128
      [200/0] via 3001::1:1:1:5 (nexthop in vrf default), 01:46:56

RP/0/RSP0/CPU0:Node1# show route vrf vrf_cust6 ipv6 unicast 3001::12:1:1:4/128
Fri Jan 15 18:39:39.689 UTC
```

```
Routing entry for 3001::12:1:1:4/128
  Known via "bgp 100", distance 200, metric 0, type internal
  Installed Jan 15 16:50:44.381 for 01:48:55
  Routing Descriptor Blocks
    3001::1:1:1:4, from 3001::1:1:1:4
      Nexthop in Vrf: "default", Table: "default", IPv6 Unicast, Table Id: 0xe0800000
      Route metric is 0
  No advertising protos.

RP/0/RSP0/CPU0:Node1# show route vrf vrf_cust6 ipv6 unicast 3001::12:1:1:4/128 detail
Fri Jan 15 18:39:51.573 UTC

Routing entry for 3001::12:1:1:4/128
  Known via "bgp 100", distance 200, metric 0, type internal
  Installed Jan 15 16:50:44.381 for 01:49:07
  Routing Descriptor Blocks
    3001::1:1:1:4, from 3001::1:1:1:4
      Nexthop in Vrf: "default", Table: "default", IPv6 Unicast, Table Id: 0xe0800000
      Route metric is 0
      Label: None
      Tunnel ID: None
      Binding Label: None
      Extended communities count: 0
      Source RD attributes: 0x0000:100:6
      NHID:0x0(Ref:0)
      SRv6 Headend: H.Encaps.Red [base], SID-list {cafe:0:0:4:49::}
  Route version is 0x1 (1)
  No local label
  IP Precedence: Not Set
  QoS Group ID: Not Set
  Flow-tag: Not Set
  Fwd-class: Not Set
  Route Priority: RIB_PRIORITY_RECURSIVE (12) SVD Type RIB_SVD_TYPE_REMOTE
  Download Priority 3, Download Version 3
  No advertising protos.
```

The following examples show how to verify the current IPv6 Cisco Express Forwarding (CEF) table:

```
RP/0/RSP0/CPU0:Node1# show cef vrf vrf_cust6 ipv6
Fri Jan 15 18:40:15.833 UTC

::/0
  drop       default handler
3001::12:1:1:1/128
  receive    Loopback105
3001::12:1:1:4/128
  recursive    cafe:0:0:4::/128
3001::12:1:1:5/128
  recursive    cafe:0:0:5::/128
fe80::/10
  receive
ff02::/16
  receive
ff02::2/128
  receive
ff02::1:ff00:0/104
  receive
ff05::/16
  receive
ff12::/16
  receive

RP/0/RSP0/CPU0:Node1# show cef vrf vrf_cust6 ipv6 3001::12:1:1:4/128
```

```
Fri Jan 15 18:40:28.853 UTC
3001::12:1:1:4/128, version 3, SRv6 Headend, internal 0x5000001 0x30 (ptr 0x78f2e0e0) [1],
 0x0 (0x0), 0x0 (0x8886b768)
 Updated Jan 15 16:50:44.385
 Prefix Len 128, traffic index 0, precedence n/a, priority 3
   via cafe:0:0:4::/128, 9 dependencies, recursive [flags 0x6000]
    path-idx 0 NHID 0x0 [0x78a0f504 0x0]
    next hop VRF - 'default', table - 0xe0800000
    next hop cafe:0:0:4::/128 via cafe:0:0:4::/64
    SRv6 H.Encaps.Red SID-list {cafe:0:0:4:49::}

RP/0/RSP0/CPU0:Node1# show cef vrf vrf_cust6 ipv6 3001::12:1:1:4/128 detail
Fri Jan 15 18:40:55.327 UTC
3001::12:1:1:4/128, version 3, SRv6 Headend, internal 0x5000001 0x30 (ptr 0x78f2e0e0) [1],
 0x0 (0x0), 0x0 (0x8886b768)
 Updated Jan 15 16:50:44.385
 Prefix Len 128, traffic index 0, precedence n/a, priority 3
  gateway array (0x7883b320) reference count 1, flags 0x2010, source rib (7), 0 backups
                [1 type 3 flags 0x48441 (0x788e6ad8) ext 0x0 (0x0)]
  LW-LDI[type=0, refc=0, ptr=0x0, sh-ldi=0x0]
  gateway array update type-time 1 Jan 15 16:50:44.385
 LDI Update time Jan 15 16:50:44.385

  Level 1 - Load distribution: 0
  [0] via cafe:0:0:4::/128, recursive

   via cafe:0:0:4::/128, 9 dependencies, recursive [flags 0x6000]
    path-idx 0 NHID 0x0 [0x78a0f504 0x0]
    next hop VRF - 'default', table - 0xe0800000
    next hop cafe:0:0:4::/128 via cafe:0:0:4::/64
    SRv6 H.Encaps.Red SID-list {cafe:0:0:4:49::}

    Load distribution: 0 1 (refcount 1)

    Hash  OK  Interface                Address
    0     Y   HundredGigE0/0/0/0       remote
    1     Y   HundredGigE0/0/0/1       remote
```

# SRv6 Services: IPv4 L3VPN Active-Standby Redundancy using Port-Active Mode

The Segment Routing IPv6 (SRv6) Services: IPv4 L3VPN Active-Standby Redundancy using Port-Active Mode feature provides all-active per-port load balancing for multihoming. The forwarding of traffic is determined based on a specific interface rather than per-flow across multiple Provider Edge routers. This feature enables efficient load-balancing and provides faster convergence. In an active-standby scenario, the active PE router is detected using designated forwarder (DF) election by modulo calculation and the interface of the standby PE router brought down. For Modulo calculation, byte 10 of the Ethernet Segment Identifier (ESI) is used.

### Usage Guidelines and Restrictions

- This feature can only be configured for bundle interfaces.
- When an EVPN Ethernet Segment (ES) is configured with port-active load-balancing mode, you cannot configure ACs of that bundle on bridge-domains with a configured EVPN instance (EVI). EVPN Layer 2 bridging service is not compatible with port-active load-balancing.

# SRv6 Services for L3VPN Active-Standby Redundancy using Port-Active Mode: Operation

Under port-active operational mode, EVPN Ethernet Segment (ES) routes are exchanged across BGP for the routers servicing the multihomed ES. Each PE router then builds an ordered list of the IP addresses of all PEs connected to the ES, including itself, and assigns itself an ordinal for its position in the list. The ordinals are used with the modulo calculation to determine which PE will be the Designated Forwarder (DF) for a given ES. All non-DF PEs will take the respective bundles out of service.

In the case of link or port failure, the active DF PE withdraws its ES route. This re-triggers DF election for all PEs that service the ES and a new PE is elected as DF.

# Configure SRv6 Services L3VPN Active-Standby Redundancy using Port-Active Mode

This section describes how you can configure SRv6 services L3VPN active-standby redundancy using port-active mode under an Ethernet Segment (ES).

## Configuration Example

```
/* Configure Ethernet Link Bundles */
Router# configure
Router(config)# interface Bundle-Ether10
Router(config-if)# ipv4 address 10.0.0.2 255.255.255.0
Router(config-if)# ipv6 address 2001:DB8::1
Router(config-if)# lacp period short
Router(config-if)# mac-address 1.2.3
Router(config-if)# bundle wait-while 0
Router(config-if)# exit
Router(config)# interface GigabitEthernet 0/2/0/5
Router(config-if)# bundle id 14 mode active
Router(config-if)# commit

/* Configure load balancing. */
Router# configure
Router(config)# evpn
Router(config-evpn)# interface Bundle-Ether10
Router(config-evpn-ac)# ethernet-segment
Router(config-evpn-ac-es)# identifier type 0 11.11.11.11.11.11.11.11.14
Router(config-evpn-ac-es)# load-balancing-mode port-active
Router(config-evpn-ac-es)# commit
!
/* Configure address family session in BGP. */
Router# configure
Router(config)# router bgp 100
Router(config-bgp)# bgp router-id 192.168.0.2
Router(config-bgp)# address-family l2vpn evpn
Router(config-bgp)# neighbor 192.168.0.3
Router(config-bgp-nbr)# remote-as 200
Router(config-bgp-nbr)# update-source Loopback 0
Router(config-bgp-nbr)# address-family l2vpn evpn
Router(config-bgp-nbr)# commit
```

## Running Configuration

```
interface Bundle-Ether14
 ipv4 address 14.0.0.2 255.255.255.0
 ipv6 address 14::2/64
 lacp period short
 mac-address 1.2.3
 bundle wait-while 0
!
interface GigabitEthernet0/2/0/5
 bundle id 14 mode active
!
evpn
 interface Bundle-Ether14
  ethernet-segment
   identifier type 0 11.11.11.11.11.11.11.11.14
   load-balancing-mode port-active
  !
 !
!
router bgp 100
 bgp router-id 192.168.0.2
 address-family l2vpn evpn
 !
 neighbor 192.168.0.3
  remote-as 100
  update-source Loopback0
  address-family l2vpn evpn
  !
 !
!
```

## Verification

Verify the SRv6 services L3VPN active-standby redundancy using port-active mode configuration.

```
/* Verify ethernet-segment details on active DF router */
Router# show evpn ethernet-segment interface Bundle-Ether14 detail
Ethernet Segment Id      Interface                          Nexthops
------------------------ ---------------------------------- --------------------
0011.1111.1111.1111.1114 BE14                               192.168.0.2
                                                            192.168.0.3
    ES to BGP Gates   : Ready
  ES to L2FIB Gates : Ready
  Main port         :
     Interface name : Bundle-Ether14
     Interface MAC  : 0001.0002.0003
     IfHandle       : 0x000041d0
     State          : Up
     Redundancy     : Not Defined
  ESI type          : 0
     Value          : 11.1111.1111.1111.1114
  ES Import RT      : 1111.1111.1111 (from ESI)
  Source MAC        : 0000.0000.0000 (N/A)
  Topology          :
     Operational    : MH
     Configured     : Port-Active
  Service Carving   : Auto-selection
     Multicast      : Disabled
  Peering Details   :
     192.168.0.2 [MOD:P:00]
     192.168.0.3 [MOD:P:00]
```

```
  Service Carving Results:
     Forwarders     : 0
     Permanent      : 0
     Elected        : 0
     Not Elected    : 0
  MAC Flushing mode : STP-TCN
  Peering timer     : 3 sec [not running]
  Recovery timer    : 30 sec [not running]
  Carving timer     : 0 sec [not running]
  Local SHG label   : None
  Remote SHG labels : 0


/* Verify bundle Ethernet configuration on active DF router */
Router# show bundle bundle-ether 14
Bundle-Ether14
  Status:                                    Up
  Local links <active/standby/configured>:   1 / 0 / 1
  Local bandwidth <effective/available>:     1000000 (1000000) kbps
  MAC address (source):                      0001.0002.0003 (Configured)
  Inter-chassis link:                        No
  Minimum active links / bandwidth:          1 / 1 kbps
  Maximum active links:                      64
  Wait while timer:                          Off
  Load balancing:
    Link order signaling:                    Not configured
    Hash type:                               Default
    Locality threshold:                      None
  LACP:                                      Operational
    Flap suppression timer:                  Off
    Cisco extensions:                        Disabled
    Non-revertive:                           Disabled
  mLACP:                                     Not configured
  IPv4 BFD:                                  Not configured
  IPv6 BFD:                                  Not configured

  Port                  Device           State        Port ID         B/W, kbps
  ----------------------  ---------------  -----------  --------------  ----------
  Gi0/2/0/5             Local            Active       0x8000, 0x0003     1000000
      Link is Active



/*  Verify ethernet-segment details on standby DF router */
Router# show evpn ethernet-segment interface bundle-ether 10 detail

Router# show evpn ethernet-segment interface Bundle-Ether24 detail
Ethernet Segment Id      Interface                          Nexthops
------------------------ ---------------------------------- --------------------
0011.1111.1111.1111.1114 BE24                               192.168.0.2
                                                            192.168.0.3
  ES to BGP Gates   : Ready
  ES to L2FIB Gates : Ready
  Main port         :
     Interface name : Bundle-Ether24
     Interface MAC  : 0001.0002.0003
     IfHandle       : 0x000041b0
     State          : Standby
     Redundancy     : Not Defined
  ESI type          : 0
     Value          : 11.1111.1111.1111.1114
  ES Import RT      : 1111.1111.1111 (from ESI)
  Source MAC        : 0000.0000.0000 (N/A)
```

```
  Topology          :
     Operational    : MH
     Configured     : Port-Active
  Service Carving   : Auto-selection
     Multicast      : Disabled
  Peering Details   :
     192.168.0.2 [MOD:P:00]
     192.168.0.3 [MOD:P:00]

  Service Carving Results:
     Forwarders     : 0
     Permanent      : 0
     Elected        : 0
     Not Elected    : 0
  MAC Flushing mode : STP-TCN
  Peering timer     : 3 sec [not running]
  Recovery timer    : 30 sec [not running]
  Carving timer     : 0 sec [not running]
  Local SHG label   : None
  Remote SHG labels : 0

/* Verify bundle configuration on standby DF router */
Router# show bundle bundle-ether 24

Bundle-Ether24
  Status:                                     LACP OOS (out of service)
  Local links <active/standby/configured>:    0 / 1 / 1
  Local bandwidth <effective/available>:      0 (0) kbps
  MAC address (source):                       0001.0002.0003 (Configured)
  Inter-chassis link:                         No
  Minimum active links / bandwidth:           1 / 1 kbps
  Maximum active links:                       64
  Wait while timer:                           Off
  Load balancing:
    Link order signaling:                     Not configured
    Hash type:                                Default
    Locality threshold:                       None
  LACP:                                       Operational
    Flap suppression timer:                   Off
    Cisco extensions:                         Disabled
    Non-revertive:                            Disabled
  mLACP:                                      Not configured
  IPv4 BFD:                                   Not configured
  IPv6 BFD:                                   Not configured

  Port                  Device           State        Port ID         B/W, kbps
  --------------------  ---------------  -----------  --------------  ----------
  Gi0/0/0/4             Local            Standby      0x8000, 0x0002     1000000
      Link is in standby due to bundle out of service state
```

# SRv6 Services: BGP Global IPv4

This feature extends support of SRv6-based BGP services to include Internet (IPv4) services by implementing End.DT4 SRv6 functions at the PE node (draft-ietf-bess-srv6-services).

### Usage Guidelines and Limitations

- SRv6 locator can be assigned globally or under IPv4 unicast address family
- Equal-Cost Multi-path (ECMP) and Unequal Cost Multipath (UCMP) are supported.

- BGP, OSPF, Static are supported as PE-CE protocol.
- Dual-Stack L3 Services (IPv4 BGP global, IPv6 BGP global) are supported.

### Use Case 1: BGP Global IPv4 Over SRv6 with Per-VRF SID Allocation Mode (End.DT4)

The following example shows how to configure BGP global IPv4 over SRv6 with per-VRF SID allocation.

```
Node1(config)# router bgp 1
Node1(config-bgp)# bgp router-id 10.1.0.1
Node1(config-bgp)# address-family ipv4 unicast
Node1(config-bgp-af)# segment-routing srv6
Node1(config-bgp-af-srv6)# locator Node1
Node1(config-bgp-af-srv6)# alloc mode per-vrf
Node1(config-bgp-af-srv6)# exit
Node1(config-bgp-af)# exit
Node1(config-bgp)# neighbor 60::2
Node1(config-bgp-nbr)# remote-as 1
Node1(config-bgp-nbr)# update-source Loopback1
Node1(config-bgp-nbr)# address-family ipv4 unicast
Node1(config-bgp-nbr-af)# encapsulation-type srv6
Node1(config-bgp-nbr-af)# exit
Node1(config-bgp-nbr)# exit
Node1(config-bgp)# neighbor 52.52.52.1
Node1(config-bgp-nbr)# remote-as 3
Node1(config-bgp-nbr)# address-family ipv4 unicast
Node1(config-bgp-nbr-af)# route-policy passall in
Node1(config-bgp-nbr-af)# route-policy passall out
Node1(config-bgp-nbr-af)# commit
```

### Running Configuration

```
router bgp 1
 bgp router-id 10.1.0.1
 address-family ipv4 unicast
  segment-routing srv6
   locator Node1
   alloc mode per-vrf
  !
 !
 neighbor 60::2
  remote-as 1
  update-source Loopback1
  address-family ipv4 unicast
   encapsulation-type srv6
  !
 !
 neighbor 52.52.52.1
  remote-as 3
  address-family ipv4 unicast
   route-policy passall in
   route-policy passall out
  !
 !
!
```

### Use Case 2: BGP Global IPv4 over SRv6 with Per-Prefix SID Allocation

This use case provides the ability to assign a specific SRv6 locator for a given prefix or a set of prefixes. The egress PE advertises the prefix with the specified locator. This allows for per-prefix steering into desired transport behaviors, such as Flex Algo.

To assign an SRv6 locator for a specific prefix, configure a route policy to specify the SID allocation mode based on match criteria. Examples of match criteria are destination-based match or community-based match.

- Supported SID allocation modes are per-VRF and per-CE.
- For per-VRF allocation mode, you can also specify the SRv6 locator.
  - If an SRv6 locator is specified in the route policy, BGP will use that to allocate per-VRF SID. If the specified locator is invalid, the SID will not be allocated.
  - If an SRv6 locator is not specified in the route policy, the default locator is used to allocate the SID. If the default locator is not configured in BGP, then the SID will not be allocated.
- Per-CE allocation mode always uses the default locator to allocate the SID.

For more information on configuring routing policies, refer to the "Implementing Routing Policy" chapter in the *Routing Configuration Guide for Cisco ASR 9000 Series Routers*.

The following example shows a route policy specifying the SID allocation mode with destination-based match:

```
Node1(config)# route-policy set_per_prefix_locator_rpl
Node1(config-rpl)# if destination in (10.1.1.0/24) then
Node1(config-rpl-if)# set srv6-alloc-mode per-vrf locator locator1
Node1(config-rpl-if)# elseif destination in (2.2.2.0/24) then
Node1(config-rpl-elseif)# set srv6-alloc-mode per-vrf locator locator2
Node1(config-rpl-elseif)# elseif destination in (3.3.3.0/24) then
Node1(config-rpl-elseif)# set srv6-alloc-mode per-vrf
Node1(config-rpl-elseif)# elseif destination in (4.4.4.0/24) then
Node1(config-rpl-elseif)# set srv6-alloc-mode per-ce
Node1(config-rpl-elseif)# else
Node1(config-rpl-else)# drop
Node1(config-rpl-else)# endif
Node1(config-rpl)# end-policy
Node1(config)#
```

The following example shows how to configure BGP global IPv4 over SRv6 with a route policy to determine the SID allocation mode for given prefix.

```
Node1(config)# router bgp 100
Node1(config-bgp)# address-family ipv4 unicast
Node1(config-bgp-af)# segment-routing srv6
Node1(config-bgp-af-srv6)# alloc mode route-policy set_per_prefix_locator_rpl
```

### Running Configuration

```
route-policy set_per_prefix_locator_rpl
  if destination in (10.1.1.0/24) then
    set srv6-alloc-mode per-vrf locator locator1
  elseif destination in (2.2.2.0/24) then
    set srv6-alloc-mode per-vrf locator locator2
  elseif destination in (3.3.3.0/24) then
    set srv6-alloc-mode per-vrf
  elseif destination in (4.4.4.0/24) then
    set srv6-alloc-mode per-ce
```

```
  else
    drop
  endif
end-policy
!
router bgp 100
 address-family ipv4 unicast
  segment-routing srv6
   alloc mode route-policy set_per_prefix_locator_rpl
  !
 !
!
```

Verify that the local and received SIDs have been correctly allocated under BGP IPv4 address family:

```
Node1# show bgp ipv4 unicast local-sids
…
Status codes: s suppressed, d damped, h history, * valid, > best
              i - internal, r RIB-failure, S stale, N Nexthop-discard
Origin codes: i - IGP, e - EGP, ? - incomplete
   Network            Local Sid                                  Alloc mode   Locator
*> 10.1.1.0/24        fc00:0:0:1:41::                              per-vrf     locator1
*> 2.2.2.0/24         fc00:0:8:1:41::                              per-vrf     locator2
*> 3.3.3.0/24         fc00:0:9:1:42::                              per-vrf     locator4
*> 4.4.4.0/24         fc00:0:9:1:43::                              per-ce      locator4
*> 10.1.1.5/32        NO SRv6 Sid                                 -            -
* i8.8.8.8/32         NO SRv6 Sid                                 -            -


Node1# show bgp ipv4 unicast received-sids
…
Status codes: s suppressed, d damped, h history, * valid, > best
              i - internal, r RIB-failure, S stale, N Nexthop-discard
Origin codes: i - IGP, e - EGP, ? - incomplete
   Network            Next Hop                            Received Sid
*> 10.1.1.0/24        66.2.2.2                            NO SRv6 Sid
*> 2.2.2.0/24         66.2.2.2                            NO SRv6 Sid
*> 3.3.3.0/24         66.2.2.2                            NO SRv6 Sid
*> 4.4.4.0/24         66.2.2.2                            NO SRv6 Sid
*> 10.1.1.5/32        66.2.2.2                            NO SRv6 Sid
* i8.8.8.8/32         77.1.1.2                            fc00:0:0:2:41::
```

# SRv6 Services: BGP Global IPv6

This feature extends support of SRv6-based BGP services to include Internet (IPv6) services by implementing End.DT6 SRv6 functions at the PE node, as defined in IETF draft "SRv6 BGP based Overlay services".

### Usage Guidelines and Limitations

- SRv6 locator can be assigned globally or under IPv4 unicast address family
- Equal-Cost Multi-path (ECMP) and Unequal Cost Multipath (UCMP) are supported.
- BGP, OSPF, Static are supported as PE-CE protocol.
- Dual-Stack L3 Services (IPv4 BGP global, IPv6 BGP global) are supported.

### BGP Global IPv6 Over SRv6 with Per-VRF SID Allocation Mode (End.DT6)

To configure BGP global IPv6 over SRv6, use the following commands:

- **router bgp** *as-number* **address-family ipv6 unicast segment-routing srv6**: Enable SRv6
- **router bgp** *as-number* **address-family ipv6 unicast segment-routing srv6 alloc mode** {**per-vrf** | **route-policy** *policy_name*}: Specify the SID behavior (allocation mode).
  - **per-vrf**: Specifies that the same label is be used for all the routes advertised from a unique VRF.
  - **route-policy** *policy_name*: Uses a route policy to determine the SID allocation mode and locator (if provided) for given prefix.
- **router bgp** *as-number* **address-family ipv6 unicast segment-routing srv6 locator** *WORD*: Specify the locator
- **router bgp** *as-number* {**af-group** *WORD*| **neighbor-group** *WORD* | **neighbor** *ipv6-addr*} **address-family ipv6 unicast encapsulation-type srv6**: Specify the encapuslation type for SRv6.
  - Use **af-group** *WORD* to apply the SRv6 encapsulation type to the address family group for BGP neighbors.
  - Use **neighbor-group** *WORD*to apply the SRv6 encapsulation type to the neighbor group for Border Gateway Protocol (BGP) neighbors.
  - Use **neighbor** *ipv6-addr* to apply the SRv6 encapsulation type to the specific BGP neighbor.

### Use Case 1: BGP Global IPv6 over SRv6 with Per-AFI SID Allocation

The following example shows how to configure BGP global IPv6 over SRv6 with per-VRF SID allocation.

```
Node1(config)# router bgp 100
Node1(config-bgp)# bgp router-id 10.1.1.1
Node1(config-bgp)# segment-routing srv6
Node1(config-bgp-gbl-srv6)# locator Node1
Node1(config-bgp-gbl-srv6)# exit
Node1(config-bgp)# address-family ipv6 unicast
Node1(config-bgp-af)# segment-routing srv6
Node1(config-bgp-af-srv6)# locator Node1
Node1(config-bgp-af-srv6)# alloc mode per-vrf
Node1(config-bgp-af-srv6)# exit
Node1(config-bgp-af)# exit
Node1(config-bgp)# neighbor 3001::1:1:1:4
Node1(config-bgp-nbr)# address-family ipv6 unicast
Node1(config-bgp-nbr-af)# encapsulation-type srv6
Node1(config-bgp-nbr-af)# exit
Node1(config-bgp-nbr)# exit
Node1(config-bgp)# neighbor 3001::1:1:1:5
Node1(config-bgp-nbr)# address-family ipv6 unicast
Node1(config-bgp-nbr-af)# encapsulation-type srv6
Node1(config-bgp-nbr-af)# commit
```

### Running Configuration

```
router bgp 100
 bgp router-id 10.1.1.1
 segment-routing srv6
  locator Node1
 !
 address-family ipv6 unicast
  segment-routing srv6
   locator Node1
   alloc mode per-vrf
```

```
 !
!
neighbor 3001::1:1:1:4
 address-family ipv6 unicast
  encapsulation-type srv6
 !
!
neighbor 3001::1:1:1:5
 address-family ipv6 unicast
  encapsulation-type srv6
```

### Use Case 2: BGP Global IPv6 over SRv6 with Per-Prefix SID Allocation

This use case provides the ability to assign a specific SRv6 locator for a given prefix or a set of prefixes. The egress PE advertises the prefix with the specified locator. This allows for per-prefix steering into desired transport behaviors, such as Flex Algo.

To assign an SRv6 locator for a specific prefix, configure a route policy to specify the SID allocation mode based on match criteria. Examples of match criteria are destination-based match or community-based match.

- Supported SID allocation modes are per-VRF and per-CE.
- For per-VRF allocation mode, you can also specify the SRv6 locator.
  - If an SRv6 locator is specified in the route policy, BGP will use that to allocate per-VRF SID. If the specified locator is invalid, the SID will not be allocated.
  - If an SRv6 locator is not specified in the route policy, the default locator is used to allocate the SID. If the default locator is not configured in BGP, then the SID will not be allocated.
- Per-CE allocation mode always uses the default locator to allocate the SID.

For more information on configuring routing policies, refer to the "Implementing Routing Policy" chapter in the *Routing Configuration Guide for Cisco ASR 9000 Series Routers*.

The following example shows a route policy specifying the SID allocation mode with destination-based match:

```
Node1(config)# route-policy set_per_prefix_locator_rpl
Node1(config-rpl)# if destination in (3001::1:1:1:1/128) then
Node1(config-rpl-if)# set srv6-alloc-mode per-vrf locator locator1
Node1(config-rpl-if)# elseif destination in (3001::2:2:2:2/128) then
Node1(config-rpl-elseif)# set srv6-alloc-mode per-vrf locator locator2
Node1(config-rpl-elseif)# elseif destination in (3001::3:3:3:3/128) then
Node1(config-rpl-elseif)# set srv6-alloc-mode per-vrf
Node1(config-rpl-elseif)# elseif destination in (3001::4:4:4:4/128) then
Node1(config-rpl-elseif)# set srv6-alloc-mode per-ce
Node1(config-rpl-elseif)# else
Node1(config-rpl-else)# drop
Node1(config-rpl-else)# endif
Node1(config-rpl)# end-policy
```

The following example shows how to configure BGP global IPv6 over SRv6 with a route policy to determine the SID allocation mode for given prefix.

```
Node1(config)# router bgp 100
Node1(config-bgp)# address-family ipv4 unicast
Node1(config-bgp-af)# segment-routing srv6
Node1(config-bgp-af-srv6)# alloc mode route-policy set_per_prefix_locator_rpl
```

### Running Configuration

```
route-policy set_per_prefix_locator_rpl
  if destination in (3001::1:1:1:1/128) then
    set srv6-alloc-mode per-vrf locator locator1
  elseif destination in (3001::2:2:2:2/128) then
    set srv6-alloc-mode per-vrf locator locator2
  elseif destination in (3001::3:3:3:3/128) then
    set srv6-alloc-mode per-vrf
  elseif destination in (3001::4:4:4:4/128) then
    set srv6-alloc-mode per-ce
  else
    drop
  endif
end-policy
!
router bgp 100
 address-family ipv6 unicast
  segment-routing srv6
   alloc mode route-policy set_per_prefix_locator_rpl
  !
 !
```

Verify that the local and received SIDs have been correctly allocated under BGP IPv6 address family:

```
Node1# show bgp ipv6 unicast local-sids
…
Status codes: s suppressed, d damped, h history, * valid, > best
              i - internal, r RIB-failure, S stale, N Nexthop-discard
Origin codes: i - IGP, e - EGP, ? - incomplete
   Network           Local Sid                                Alloc mode   Locator
*> 3001::1:1:1:1/128  fc00:0:0:1:41::                          per-vrf      locator1
*> 3001::2:2:2:2/128  fc00:0:8:1:41::                          per-vrf      locator2
*> 3001::3:3:3:3/128  fc00:0:9:1:42::                          per-vrf      locator4
*> 3001::4:4:4:4/128  fc00:0:9:1:43::                          per-ce       locator4
*> 3001::5:5:5:5/128  NO SRv6 Sid                              -            -
* i3008::8:8:8:8/128  NO SRv6 Sid                              -            -


Node1# show bgp ipv6 unicast received-sids
…
Status codes: s suppressed, d damped, h history, * valid, > best
              i - internal, r RIB-failure, S stale, N Nexthop-discard
Origin codes: i - IGP, e - EGP, ? - incomplete
   Network           Next Hop                           Received Sid
*> 3001::1:1:1:1/128  66.2.2.2                           NO SRv6 Sid
*> 3001::2:2:2:2/128  66.2.2.2                           NO SRv6 Sid
*> 3001::3:3:3:3/128  66.2.2.2                           NO SRv6 Sid
*> 3001::4:4:4:4/128  66.2.2.2                           NO SRv6 Sid
*> 3001::5:5:5:5/128  66.2.2.2                           NO SRv6 Sid
* i3008::8:8:8:8/128  77.1.1.2                           fc00:0:0:2:41::
```

### Verification

The following examples show how to verify the BGP global IPv6 configuration using the **show bgp ipv6 unicast** commands.

```
RP/0/RSP0/CPU0:Node1# show bgp ipv6 unicast summary
Fri Jan 15 21:07:04.681 UTC
BGP router identifier 10.1.1.1, local AS number 100
BGP generic scan interval 60 secs
Non-stop routing is enabled
```

```
BGP table state: Active
Table ID: 0xe0800000   RD version: 4
BGP main routing table version 4
BGP NSR Initial initsync version 1 (Reached)
BGP NSR/ISSU Sync-Group versions 0/0
BGP scan interval 60 secs

BGP is operating in STANDALONE mode.


Process       RcvTblVer   bRIB/RIB   LabelVer  ImportVer  SendTblVer  StandbyVer
Speaker               4          4          4          4           4           0

Neighbor        Spk    AS MsgRcvd MsgSent   TblVer  InQ OutQ  Up/Down  St/PfxRcd
3001::1:1:1:4     0   100    1502    1502        4    0    0 04:16:26          1
3001::1:1:1:5     0   100    1501    1501        4    0    0 04:14:47          1

RP/0/RSP0/CPU0:Node1# show bgp ipv6 unicast
Fri Jan 15 21:07:26.818 UTC
BGP router identifier 10.1.1.1, local AS number 100
BGP generic scan interval 60 secs
Non-stop routing is enabled
BGP table state: Active
Table ID: 0xe0800000   RD version: 4
BGP main routing table version 4
BGP NSR Initial initsync version 1 (Reached)
BGP NSR/ISSU Sync-Group versions 0/0
BGP scan interval 60 secs

Status codes: s suppressed, d damped, h history, * valid, > best
              i - internal, r RIB-failure, S stale, N Nexthop-discard
Origin codes: i - IGP, e - EGP, ? - incomplete
   Network          Next Hop            Metric LocPrf Weight Path
*> 3001::13:1:1:1/128 ::                      0         32768 i
*>i3001::13:1:1:4/128 3001::1:1:1:4           0    100      0 i
*>i3001::13:1:1:5/128 3001::1:1:1:5           0    100      0 i

Processed 3 prefixes, 3 paths

RP/0/RSP0/CPU0:Node1# show bgp ipv6 unicast 3001::13:1:1:4/128
Fri Jan 15 21:07:50.309 UTC
BGP routing table entry for 3001::13:1:1:4/128
Versions:
  Process           bRIB/RIB  SendTblVer
  Speaker                 4           4
Last Modified: Jan 15 17:13:50.032 for 03:54:01
Paths: (1 available, best #1)
  Not advertised to any peer
  Path #1: Received by speaker 0
  Not advertised to any peer
  Local
    3001::1:1:1:4 (metric 30) from 3001::1:1:1:4 (10.1.1.4)
      Origin IGP, metric 0, localpref 100, valid, internal, best, group-best
      Received Path ID 0, Local Path ID 1, version 4
      PSID-Type:L3, SubTLV Count:1
       SubTLV:
        T:1(Sid information), Sid:cafe:0:0:4:4b::, Behavior:18, SS-TLV Count:1
         SubSubTLV:
          T:1(Sid structure):
```

The following examples show how to verify the current routes in the Routing Information Base (RIB):

```
RP/0/RSP0/CPU0:Node1# show route ipv6 3001::13:1:1:4/128
Fri Jan 15 21:08:05.499 UTC
```

```
Routing entry for 3001::13:1:1:4/128
  Known via "bgp 100", distance 200, metric 0, type internal
  Installed Jan 15 17:13:50.431 for 03:54:15
  Routing Descriptor Blocks
    3001::1:1:1:4, from 3001::1:1:1:4
      Route metric is 0
  No advertising protos.

RP/0/RSP0/CPU0:Node1# show route ipv6 3001::13:1:1:4/128 detail
Fri Jan 15 21:08:22.628 UTC

Routing entry for 3001::13:1:1:4/128
  Known via "bgp 100", distance 200, metric 0, type internal
  Installed Jan 15 17:13:50.431 for 03:54:32
  Routing Descriptor Blocks
    3001::1:1:1:4, from 3001::1:1:1:4
      Route metric is 0
      Label: None
      Tunnel ID: None
      Binding Label: None
      Extended communities count: 0
      NHID:0x0(Ref:0)
      SRv6 Headend: H.Encaps.Red [base], SID-list {cafe:0:0:4:4b::}
  Route version is 0x1 (1)
  No local label
  IP Precedence: Not Set
  QoS Group ID: Not Set
  Flow-tag: Not Set
  Fwd-class: Not Set
  Route Priority: RIB_PRIORITY_RECURSIVE (12) SVD Type RIB_SVD_TYPE_LOCAL
  Download Priority 4, Download Version 93
  No advertising protos.
```

The following examples show how to verify the current IPv6 Cisco Express Forwarding (CEF) table:

```
RP/0/RSP0/CPU0:Node1# show cef ipv6 3001::13:1:1:4/128
Fri Jan 15 21:08:41.483 UTC
3001::13:1:1:4/128, version 93, SRv6 Headend, internal 0x5000001 0x40 (ptr 0x78a100d4) [1],
 0x0 (0x0), 0x0 (0x8886b840)
 Updated Jan 15 17:13:50.433
 Prefix Len 128, traffic index 0, precedence n/a, priority 4
   via cafe:0:0:4::/128, 9 dependencies, recursive [flags 0x6000]
    path-idx 0 NHID 0x0 [0x78a0f504 0x0]
    next hop cafe:0:0:4::/128 via cafe:0:0:4::/64
    SRv6 H.Encaps.Red SID-list {cafe:0:0:4:4b::}

RP/0/RSP0/CPU0:Node1# show cef ipv6 3001::13:1:1:4/128 detail
Fri Jan 15 21:08:59.789 UTC
3001::13:1:1:4/128, version 93, SRv6 Headend, internal 0x5000001 0x40 (ptr 0x78a100d4) [1],
 0x0 (0x0), 0x0 (0x8886b840)
 Updated Jan 15 17:13:50.433
 Prefix Len 128, traffic index 0, precedence n/a, priority 4
  gateway array (0x7883b5d8) reference count 1, flags 0x2010, source rib (7), 0 backups
                [1 type 3 flags 0x48441 (0x788e6c40) ext 0x0 (0x0)]
  LW-LDI[type=0, refc=0, ptr=0x0, sh-ldi=0x0]
  gateway array update type-time 1 Jan 15 17:13:50.433
 LDI Update time Jan 15 17:13:50.433

  Level 1 - Load distribution: 0
  [0] via cafe:0:0:4::/128, recursive

   via cafe:0:0:4::/128, 9 dependencies, recursive [flags 0x6000]
    path-idx 0 NHID 0x0 [0x78a0f504 0x0]
```

```
next hop cafe:0:0:4::/128 via cafe:0:0:4::/64
SRv6 H.Encaps.Red SID-list {cafe:0:0:4:4b::}

Load distribution: 0 1 (refcount 1)

Hash  OK  Interface                Address
0     Y   HundredGigE0/0/0/0       remote
1     Y   HundredGigE0/0/0/1       remote
```

# SRv6 Services: EVPN VPWS — All-Active Multi-Homing

***Table 18: Feature History Table***

| Feature Name | Release | Description |
|---|---|---|
| SRv6 Services: EVPN VPWS — All-Active Multi-Homing (SRv6 Base) | Release 7.3.2 | This feature provides an ELINE (P2P) service with all-active multihoming capability over an SRv6 network. This features is supported on ASR 9000 3rd, 4th, and 5th generation line cards.<br><br>All-Active Multi-Homing enables an operator to connect a customer edge (CE) device to two or more provider edge (PE) devices to provide load balancing and redundant connectivity. With All-Active Multi-Homing, all the PEs can forward traffic to and from the multi-homed device. |

EVPN VPWS All-Active Multi-Homing over SRv6 provides an ELINE (P2P) service with all-active multihoming capability over an SRv6 network.

All-Active Multi-Homing enables an operator to connect a customer edge (CE) device to two or more provider edge (PE) devices to provide load balancing and redundant connectivity. With All-Active Multi-Homing, all the PEs can forward traffic to and from the multi-homed device.

**Note** For information about EVPN VPWS, refer to the "EVPN Virtual Private Wire Service (VPWS)" chapter in the *L2VPN and Ethernet Services Configuration Guide for Cisco ASR 9000 Series Routers*.

### Configuring EVPN VPWS over SRv6

An SRv6 Locator for an EVPN VPWS service can be configured at 3 different levels independently:

- global_locator is the default locator for all EVPN-VPWS services
- evi_locator is applied to all EVPN-VPWS services for the specific EVI
- evi_service_locator is applied to an individual EVI service

When locators are configured at different levels at the same time, the following priority is implemented:

1. evi_service_locator
2. evi_locator
3. global_locator

This example shows how to configure an EVPN VPWS over SRv6 using a global locator for EVPN:

```
evpn
 segment-routing srv6
  locator sample_global_loc

l2vpn
 xconnect group sample_xcg
  p2p sample-vpws-12001-2002
   interface Bundle-Ether12001.2002
   neighbor evpn evi 12001 service 2002 segment-routing srv6
```

This example shows how to configure EVPN VPWS over SRv6 using specific EVI locator:

```
evpn
 evi 11001 segment-routing srv6
  locator sample_evi_loc

l2vpn
 xconnect group sample_xcg
  p2p sample-vpws-11001-2002
   interface Bundle-Ether11001.2002
   neighbor evpn evi 11001 service 2002 segment-routing srv6
```

This example shows how to configure an EVPN VPWS over SRv6 using a locator for an individual EVI service:

```
l2vpn
 xconnect group sample_xcg
  p2p sample-vpws-11001-2001
   interface Bundle-Ether11001.2001
   neighbor evpn evi 11001 service 2001 segment-routing srv6
    locator sample_evi_service_loc
```

### Verification

```
Router# show segment-routing srv6 locator sample_evi_loc sid
Mon Aug 12 20:57:07.759 EDT
SID                         Behavior     Context                          Owner
     State  RW
-------------------------  -----------  ------------------------------   ------------------
  -----  --
cafe:0:8:1:1::              End (PSP)    'default':1                      sidmgr
     InUse  Y
cafe:0:8:1:40::             End.DX2      11001:1                          l2vpn_srv6
     InUse  Y
cafe:0:8:1:41::             End.DX2      11001:2                          l2vpn_srv6
     InUse  Y
cafe:0:8:1:42::             End.DX2      11001:3                          l2vpn_srv6
     InUse  Y
cafe:0:8:1:44::             End.DX2      11001:2002                       l2vpn_srv6
     InUse  Y
```

```
Router# show evpn segment-routing srv6 detail
Tue Aug 13 10:30:46.020 EDT

Configured default locator: sample_global_loc
EVIs with unknown locator config: 0
VPWS with unknown locator config: 0

Locator name       Prefix                     OOR      Service count    SID count
------------       ------                     ---      -------------    ---------
sample_global_loc  cafe:0:0:1::/64            False    1                1
   Default locator
sample_evi_loc     cafe:0:8:1::/64            False    4                4
   Configured on EVIs <evi>: 11001
```

# SRv6 Services: SRv6 Services TLV Type 5 Support

IOS XR 6.6.1 supports IETF draft draft-dawra-idr-srv6-vpn-04, in which the SRv6-VPN SID TLV (TLV Type 4) carries the SRv6 Service SID information. This SID TLV is inconsistent with the SRv6 SID Structure.

In IOS XR 7.0.2 and later releases, the implementation is compliant with draft-ietf-bess-srv6-services-00, which defines a new SRv6 Services TLV (TLV Type 5/6) and SRv6 SID Structure Sub-Sub-TLV to address this inconsistency.

SRv6 SID Structure Sub-Sub-TLV describes mechanisms for signaling of the SRv6 Service SID by transposing a variable part of the SRv6 SID value (function and/or the argument parts) and carrying them in existing label fields to achieve more efficient packing of VPN and EVPN service prefix NLRIs in BGP update messages.

In order to allow backward compatibility between the newer software and the older software, use the **segment-routing srv6 prefix-sid-type4** command in Router BGP Neighbor VPNv4 Address-Family configuration mode to advertise BGP VPNv4 NLRIs in TLV Type 4 format. The newer software can receive either TLV Type 4 or TLV Type 5 formats.

The following configuration shows how to enable the advertisement of BGP VPNv4 NLRIs in TLV Type 4 format:

```
RP/0/RSP0/CPU0:Rtr-a(config)# router bgp 65000
RP/0/RSP0/CPU0:Rtr-a(config-bgp)# neighbor 6::6
RP/0/RSP0/CPU0:Rtr-a(config-bgp-nbr)# address-family vpnv4 unicast
RP/0/RSP0/CPU0:Rtr-a(config-bgp-nbr-af)# segment-routing srv6 prefix-sid-type4
RP/0/RSP0/CPU0:Rtr-a(config-bgp-nbr-af)#
```

# SRv6/MPLS L3 Service Interworking Gateway

SRv6/MPLS L3 Service Interworking Gateway enables you to extend L3 services between MPLS and SRv6 domains by providing service continuity on the control plane and data plane.

This feature allows for SRv6 L3VPN domains to interwork with existing MPLS L3VPN domains. The feature also allows a way to migrate from MPLS L3VPN to SRv6 L3VPN.

The SRv6/MPLS L3 Service Interworking Gateway provides both transport and service termination at the gateway node. The gateway generates both SRv6 VPN SIDs and MPLS VPN labels for all prefixes under the VRF configured for re-origination. The gateway supports traffic forwarding from MPLS domain to SRv6 domain by popping the MPLS VPN label, looking up the destination prefix, and pushing the appropriate SRv6

encapsulation. From SRv6 domain to MPLS domain, the gateway removes the outer IPv6 header, looks up the destination prefix, and pushes the VPN and next-hop MPLS labels.

VRFs on the gateway node are configured with 2 sets of route targets (RTs):

- MPLS L3VPN RTs
- SRv6 L3VPN RTs (called *stitching RTs*)

The gateway performs the following actions:

- Imports service routes received from one domain (MPLS or SRv6)
- Re-advertises exported service routes to the other domain (next-hop-self)
- Stitches the service on the data plane (End.DT4/H.Encaps.Red ↔ service label)

### SRv6/MPLS L3 Service Interworking Gateway Scenarios

The following scenario is used to describe the gateway functionality:

- Node 1 is an L3VPN PE in the MPLS domain with an SR prefix SID label of 16001 for its Loopback interface 10.1.1.1/32.
- Node 2 is the SRv6/MPLS L3 Service Interworking Gateway. In the MPLS domain, it has an SR prefix SID label of 16002 for its Loopback interface 10.1.1.2/32. In the SRv6 domain, it has an SRv6 locator of B:0:0:2::/64 and Loopback interface B:0:0:2::1/128.
- Node 3 is an L3VPN PE in the SRv6 domain with SRv6 locator of B:0:0:3::/64 and Loopback interface B:0:0:3::1/128.

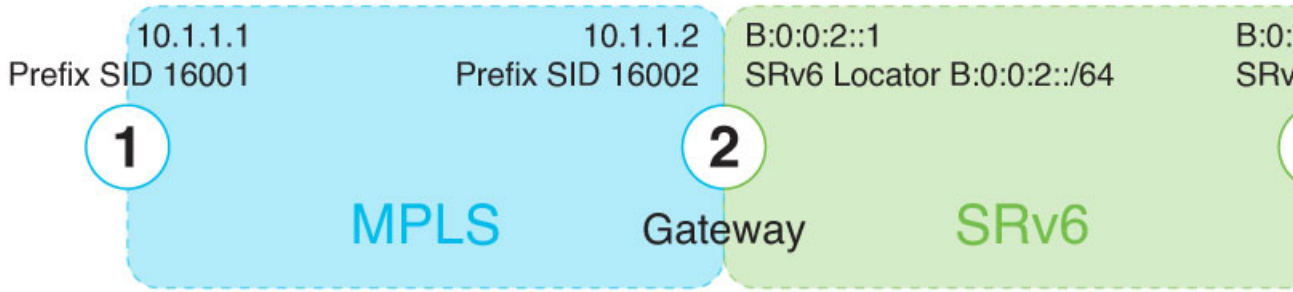


#### Scenario 1: SRv6-to-MPLS Control-Plane Direction/MPLS-to-SRv6 Data-Plane Direction

The figure below describes the associated control-plane behaviors in the SRv6-to-MPLS direction for traffic in the MPLS-to-SRv6 data-plane direction.

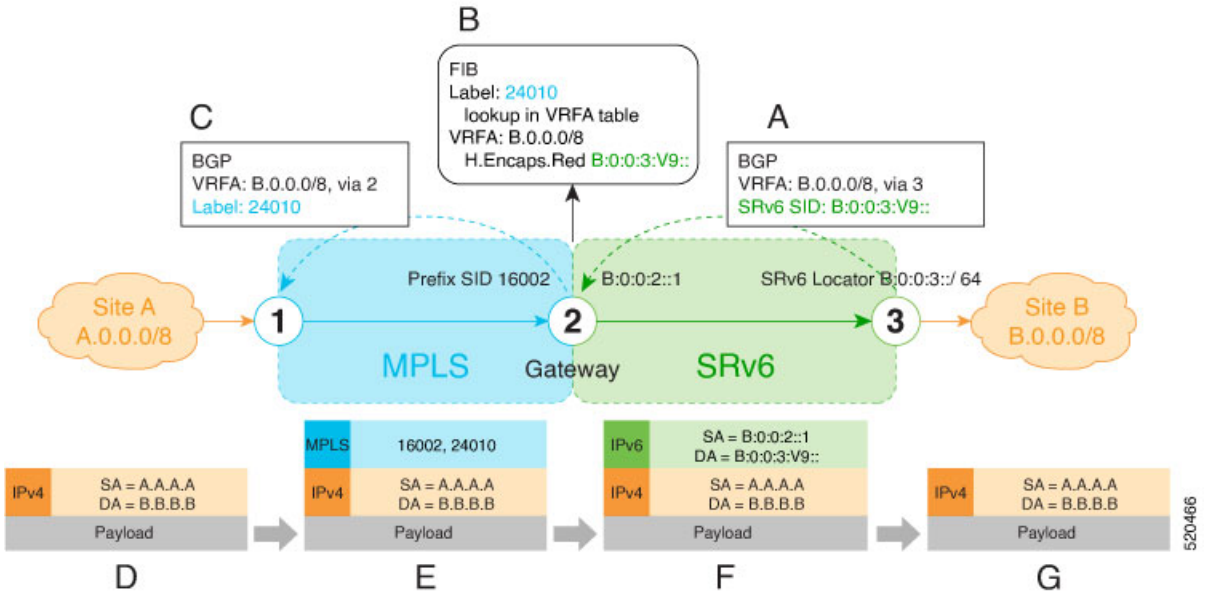


**A**. Node 3 advertises a BGP L3VPN update for prefix B.0.0.0/8 with RD corresponding to VRFA, including the SRv6 VPN SID (B:0:0:3:V9::) assigned to this VRF, in the SRv6 domain.

**Note** SRv6 End.DT4 function value "V9" is not a valid hex number, however it is used for illustration purposes to remind you of its connection to a VRF.

**B**. Node 2 (gateway) imports the BGP L3VPN update and programs its FIB:

- MPLS label 24010 is allocated for VRFA
- Prefix B.0.0.0/8 is programmed with an "SR Headend Behavior with Reduced Encapsulation in an SR Policy" function (H.Encaps.Red) of B:0:0:3:V9::

**Note** The gateway follows per-VRF label and per-VRF SID allocation methods.

**C**. Node 2 re-originates a BGP L3VPN update for the same prefix, including the MPLS VPN label (24010) allocated for the VRF, in the MPLS domain.

**D**. Site A sends traffic to an IPv4 prefix (B.B.B.B) of Site B

**E**. Node 1 encapsulates incoming traffic with the MPLS VPN label (24010) and the prefix SID MPLS label (16002) of the BGP next-hop (Node 2).

**F**. Node 2 performs the following actions:

- Pops the MPLS VPN label and looks up the destination prefix
- Encapsulates the payload in an outer IPv6 header with destination address (DA) equal to the H.Encaps.Red function (B:0:0:3:V9::)

**G**. Node 3 removes the outer IPv6 header, looks up the payload destination address (B.B.B.B), and forwards to Site B.

### Scenario 2: MPLS-to-SRv6 Control-Plane Direction/SRv6-to-MPLS Data-Plane Direction

The figure below describes the associated control-plane behaviors in the MPLS-to-SRv6 direction for traffic in the SRv6-to-MPLS data-plane direction.

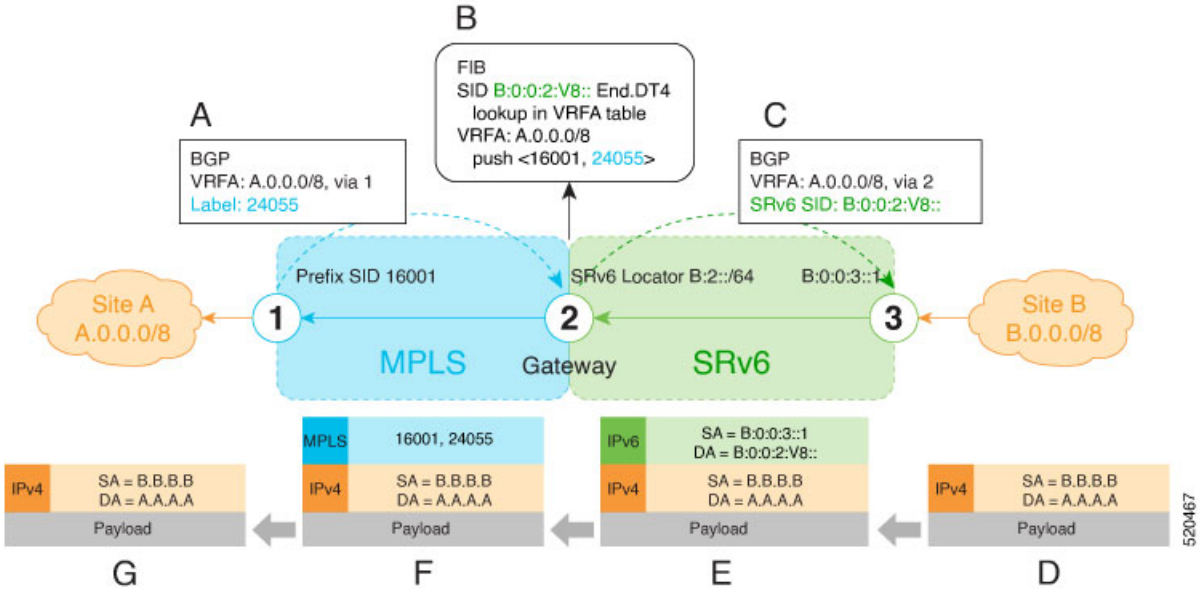


**A**. Node 1 advertises a BGP L3VPN update for prefix A.0.0.0/8 with RD corresponding to VRFA, including the MPLS VPN label (24055) assigned to this VRF, in the MPLS domain.

**B**. Node 2 (gateway) imports the BGP L3VPN update and programs its FIB:

- Prefix A.0.0.0/8 is programmed to impose an MPLS VPN label (24055) and the prefix SID MPLS label (16001) of the BGP next-hop (Node 1)
- "Endpoint with decapsulation and IPv4 table lookup" function (End.DT4) of B:0:0:2:V8:: is allocated to VRFA

**Note** SRv6 End.DT4 function value "V8" is not a valid hex number, however it is used for illustration purposes to remind you of its connection to a VRF.

**Note** The gateway follows per-VRF label and per-VRF SID allocation methods.

**C**. Node 2 re-originates a BGP L3VPN update for the same prefix, including the End.DT4 function (B:0:0:2:V8::) allocated for the VRF, in the SRv6 domain.

**D**. Site B sends traffic to an IPv4 prefix (A.A.A.A) of Site A.

**E**. Node 3 Encapsulates the payload in an outer IPv6 header with destination address (DA) equal to the End.DT4 function (B:0:0:2:V8::).

**F**. Node 2 performs the following actions:

- Removes the outer IPv6 header and looks up the destination prefix
- Pushes the MPLS VPN label (24055) and the prefix SID MPLS label (16001) of the BGP next-hop (Node 1)

**G**. Node 1 pops the MPLS VPN label, looks up the payload destination address (A.A.A.A), and forwards to Site A.

### Example

Leveraging the topology described in the above use-case, this example shows the SRv6/MPLS L3 Service Interworking Gateway configuration required at Node 2.

The following configuration shows how to enable SRv6 with locator and configure encapsulation parameters:

```
segment-routing
 srv6
  encapsulation
   source-address b:0:0:2::1
  !
  locators
   locator LOC1
    prefix b:0:0:2::/64
   !
  !
 !
!
```

The following configuration shows how to configure a VPNv4 VRF with the following route targets (RTs):

- 1111:1, RT used for MPLS L3VPN
- 2222:1, RT used for SRv6 L3VPN (stitching RT)

```
vrf ACME
 address-family ipv4 unicast
  import route-target
   1111:1
   2222:1 stitching
  !
  export route-target
   1111:1
   22222:1 stitching
  !
 !
!
```

The following configuration shows how to configure SRv6/SRv6 VPNs under BGP:

```
router bgp 100
 segment-routing srv6
  locator LOC1
 !
 neighbor 10.1.1.1
  address-family vpnv4 unicast
   import re-originate stitching-rt
   route-reflector-client
   advertise vpnv4 unicast re-originated
```

```
!
neighbor b:0:0:3::1
 address-family vpnv4 unicast
  import stitching-rt re-originate
  route-reflector-client
  encapsulation-type srv6
  advertise vpnv4 unicast re-originated stitching-rt
!
vrf ACME
 address-family ipv4 unicast
  enable label-mode
  segment-routing srv6
```

# SRv6/MPLS Dual-Connected PE

*Table 19: Feature History Table*

| Feature Name | Release | Description |
|---|---|---|
| SRv6/MPLS Dual-Connected PE (SRv6 Full-Length SID) | Release 7.3.2 | This feature allows a PE router to support IPv4 L3VPN services for a given VRF with both MPLS and SRv6. This is MPLS and SRv6 L3VPNv4 co-existence scenario and is sometimes referred to as dual-connected PE. |

A PE router can support IPv4 L3VPN service for a given VRF with both MPLS and SRv6. This is MPLS and SRv6 L3VPNv4 co-existence scenario and is sometimes referred to as dual-connected PE.

In the figure below, node 2 is a dual-connected PE to Site C, providing:

- MPLS/IPv4 L3VPN between Site A and Site C
- SRv6/IPv4 L3VPN between Site B and Site C

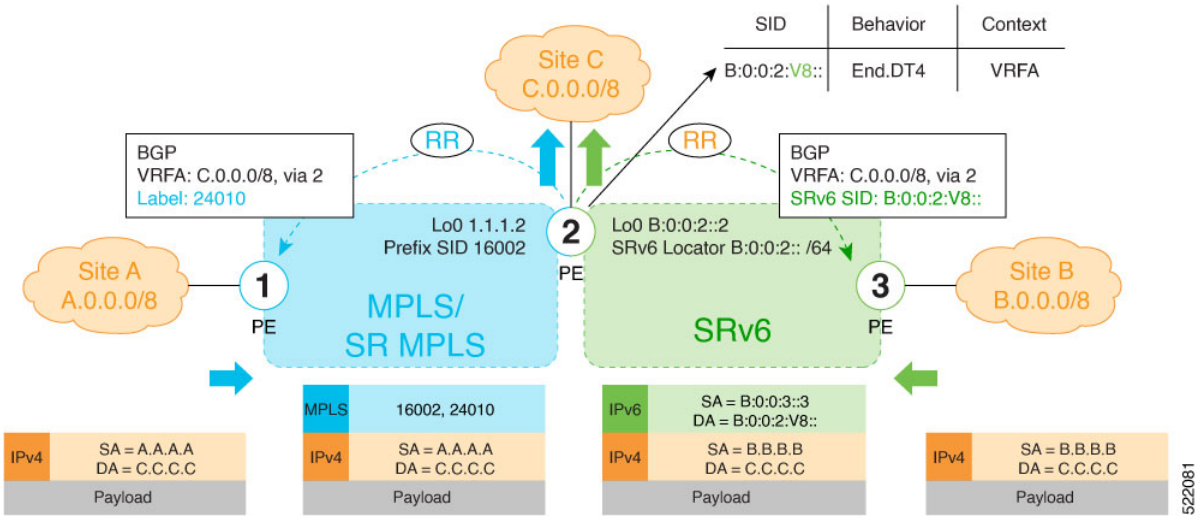

### Configure BGP to Support Dual-Mode

#### Enable MPLS Label Allocation

Use the **router bgp** *as-number* **vrf** *WORD* **address-family ipv4 unicast mpls alloc enable** command under the VRF address-family to enable per-prefix mode for MPLS labels. Additionally, use the **router bgp** *as-number* **vrf** *WORD* **address-family ipv4 unicast label mode** {**per-ce** | **per-vrf**} command to choose the type of label allocation.

```
Router(config)# router bgp 100
Router(config-bgp)# vrf blue
Router(config-bgp-vrf)# rd 1:10
Router(config-bgp-vrf)# address-family ipv4 unicast
Router(config-bgp-vrf-af)# mpls alloc enable
Router(config-bgp-vrf-af)# label mode per-ce
Router(config-bgp-vrf-af)# segment-routing srv6
Router(config-bgp-vrf-af-srv6)# alloc mode per-ce
Router(config-bgp-vrf-af-srv6)# exit
Router(config-bgp-vrf-af)# exit
Router(config-bgp-vrf)# exit
Router(config-bgp)#
```

#### Configure Encaps on Neighbor to Send the SRv6 SID Toward the SRv6 Dataplane

By default, if a VRF prefix has both an MPLS label and an SRv6 SID, the MPLS label is sent when advertising the prefix to the PE. To advertise a VRF prefix with an SRv6 SID to an SRv6 session, use the **encapsulation-type srv6** command under the neighbor VPN address-family.

```
Router(config-bgp)# neighbor 192::6
Router(config-bgp-nbr)# remote-as 1
Router(config-bgp-nbr)# address-family ipv4 unicast
Router(config-bgp-nbr-af)# encapsulation-type srv6
Router(config-bgp-nbr-af)# exit
```

#### Running Config

```
router bgp 100
 neighbor 192::6
  remote-as 1
  address-family ipv4 unicast
   encapsulation-type srv6
  !
 !
 vrf blue
  rd 1:10
  address-family ipv4 unicast
   mpls alloc enable
   label mode per-ce
   segment-routing srv6
    alloc mode per-ce
   !
  !
 !
!
```

# SRv6 SID Information in BGP-LS Reporting

BGP Link-State (BGP-LS) is used to report the topology of the domain using nodes, links, and prefixes. This feature adds the capability to report SRv6 Segment Identifier (SID) Network Layer Reachability Information (NLRI).

The following NLRI has been added to the BGP-LS protocol to support SRv6:

- Node NLRI: SRv6 Capabilities, SRv6 MSD types
- Link NLRI: End.X, LAN End.X, and SRv6 MSD types
- Prefix NLRI: SRv6 Locator
- SRv6 SID NLRI (for SIDs associated with the node): Endpoint Function, BGP-EPE Peer Node/Set

This example shows how to distribute IS-IS SRv6 link-state data using BGP-LS:

```
Router(config)# router isis 200
Router(config-isis)# distribute link-state instance-id 200
```

**Note** It is still possible to ping or trace a SID:

- **ping** B:k:F::
- **traceroute** B:k:F::

It is possible to use a list of packed carriers to ping or trace a SID, to ping or trace route, use **<destination SID> via srv6-carriers <list of packed carriers>**

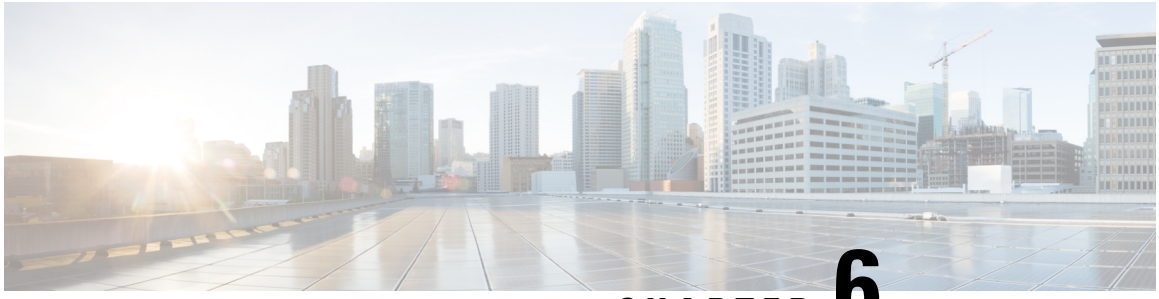

CHAPTER 6

# Configure SRv6 Traffic Engineering

*Table 20: Feature History Table*

| Feature Name | Release | Description |
|---|---|---|
| SRv6 Traffic Engineering | Release 7.3.2 | This feature introduces Segment Routing over IPv6 (SRv6) Traffic Engineering.<br>This release supports the following features:<br>• SRv6-TE with SRv6 micro-SIDs (uSIDs)<br>• SRv6 policies<br>• Manual SRv6 policies<br>• Automated steering for Layer 3-based BGP services (IPv4 L3VPN, IPv6 L3VPN, IPv4 BGP global, IPv6 BGP global)<br>• SRv6-aware Path Computation Element (PCE)<br>• PCEPv6<br>• Path computation optimization objectives (TE, IGP, latency)<br>• Path computation constraints (affinity, disjointness) |

This feature introduces Segment Routing over IPv6 (SRv6) Traffic Engineering.


- SRv6-TE Overview, on page 171
- Usage Guidelines and Limitations, on page 172
- Traffic Steering, on page 174
- SRv6-TE Policy Path Types, on page 179
- Protocols, on page 196


## SRv6-TE Overview

Traffic engineering over SRv6 can be accomplished in the following ways:

- End-to-End Flexible Algorithm: This is used for traffic engineering intents achieved with Flexible Algorithm, including low latency, multi-plane disjointness, affinity inclusion/exclusion, and SRLG exclusion.
- SRv6-TE Policy: This is used for traffic engineering intents beyond Flex Algo capabilities, such as path disjointness that rely on path computation by a PCE. In addition, this is used for user-configured explicit paths.

### End-to-End Flexible Algorithm

SRv6 Flexible Algorithm allows operators to customize IGP shortest path computation according to their own needs. An operator can assign custom SRv6 locators to realize forwarding beyond link-cost-based shortest path. As a result, Flexible Algorithm provides a traffic-engineered path automatically computed by the IGP to any destination reachable by the IGP.

### SRv6-TE Policy

SRv6 for traffic engineering (SRv6-TE) uses a “policy” to steer traffic through the network. An SRv6-TE policy path is expressed as a list of micro-segments that specifies the path, called a micro-segment ID (uSID) list. Each segment list is an end-to-end path from the source to the destination, and instructs the routers in the network to follow the specified path instead of following the shortest path calculated by the IGP. If a packet is steered into an SRv6-TE policy, the uSID list is pushed on the packet by the head-end. The rest of the network executes the instructions embedded in the uSID list.

An SRv6-TE policy is identified as an ordered list (head-end, color, end-point):

- Head-end – Where the SRv6-TE policy is instantiated
- Color – A numerical value that distinguishes between two or more policies to the same node pairs (Head-end – End point)
- End-point – The destination of the SRv6-TE policy

Every SRv6-TE policy has a color value. Every policy between the same node pairs requires a unique color value.

An SRv6-TE policy uses one or more candidate paths. A candidate path can be made up of a single SID-list or a set of weighted SID-lists (for weighted equal cost multi-path [WECMP]).

A SID list can be either the result of a dynamic path computation by a PCE or a user-configured explicit path. See SRv6-TE Policy Path Types for more information.

# Usage Guidelines and Limitations

Observe the following usage guidelines and limitations for the platform.

This release supports the following SRv6 policy functionality:

- SRv6 policies with SRv6 uSID segments
- SRv6 policies with PCE-delegated dynamic paths
- SRv6 policies with explicit paths
- SRv6 policies with single or multiple candidate paths (CP)

- SRv6 policies with a single SID list per CP
- SRv6 policies with multiple (weighted ECMP) SID lists per CP
- Path delegation and reporting with PCEPv4
- Path delegation and reporting with PCEPv6
- PCEPv4 and PCEPv6 sessions with different PCEs
- PCEP path delegation with the following optimization objective (metric) types:
  - IGP metric
  - TE metric
  - Delay (latency)
  - Hop-count
- PCEP path delegation with the following constraint types:
  - Affinity (include-any, include-all, exclude-any)
  - Path disjointness (link, node, SRLG, SRLG+node)
  - Segment protection-type:
    - Protected-only
    - Protected-preferred
    - Unprotected-only
    - Unprotected-preferred
- SRv6 policy with TI-LFA (protection of the first segment in the segment list at the head-end)
- Steering over SRv6 policies with Automated Steering for the following services:
  - L3 BGP-based services (IPv4 L3VPN, IPv6 L3VPN, IPv4 BGP global, IPv6 BGP global)
  - L2 BGP-based service (EVPN VPWS)

The following functionalities are not supported:

- SRv6 policy counters
- PCE-initiated SRv6 policies via PCEP
- SRv6 policies with head-end computed dynamic paths
- PCE path delegation with segment-type Flex Algo constraint
- PCEPv4 and PCEPv6 sessions with same PCE
- Steering over SRv6 policies based on incoming BSID (remote automated steering)
- PCC with user-configured PCE groups
- SR-PM delay-measurement over SRv6 policies

- SR-PM liveness detection over SRv6 policies
- L3 services with BGP PIC over SRv6 policies
- SRv6 policy ping

SR-PCE and SRv6-TE head-end PCEP compatibility:

- A PCEP session between an SR-PCE running Cisco IOS XR release 7.8.1 and an SRv6-TE head-end running Cisco IOS XR release 7.8.1 is supported.
- A PCEP session between an SR-PCE running Cisco IOS XR release 7.8.1 and an SRv6-TE head-end running an earlier release is supported.
- A PCEP session between an SR-PCE running Cisco IOS XR release earlier than 7.8.1 and an SRv6-TE head-end running Cisco IOS XR release 7.8.1 is not supported.
- A PCEP session between an SR-PCE running Cisco IOS XR release 7.8.1 and another SR-PCE running an earlier Cisco IOS XR release is not supported.
- As a result of the above, prior to upgrading any SRv6-TE headend nodes in the network to Cisco IOS XR release 7.8.1, you must upgrade its SR-PCE to Cisco IOS XR release 7.8.1.

**Note** When a pair of SR-PCEs part of the same redundancy group run different versions of Cisco IOS XR, they will lose their state-sync PCEP session until both SR-PCEs are upgraded to Cisco IOS XR release 7.8.1.

# Traffic Steering

## SRv6 Flexible Algorithm

With SRv6 Flexible Algorithm, a PE can advertise BGP service routes (global, VPN) that include the SRv6 locator (Algo 0 or Flex Algo) of the intended transport SLA.

For information about configuring Flexible Algorithm, see Configuring SRv6 IS-IS Flexible Algorithm, on page 125.

In the example below, the SR domain has 2 network slices. Each slice is assigned a /32 uSID Locator Block.

A slice can be realized with a user-defined Flex-Algo instances (for example, Flex Algo 128 = min-delay)

- Min-Cost Slice — FCBB:BB**00**/32
- Min-Delay Slice — FCBB:BB**01**/32

SR node2 gets a Shortest-Path Endpoint uSID (uN) from each slice:

- uN **min-cost** of Node2 — FCBB:BB**00**:0002/48
- uN **min-delay** of Node2 — FCBB:BB**01**:0002/48

Node2 announces locators via IS-IS:

- FCBB:BB**00**:0002/48 Algo **0** (min-cost)
- FCBB:BB**01**:0002/48 Algo **128** (min-delay)

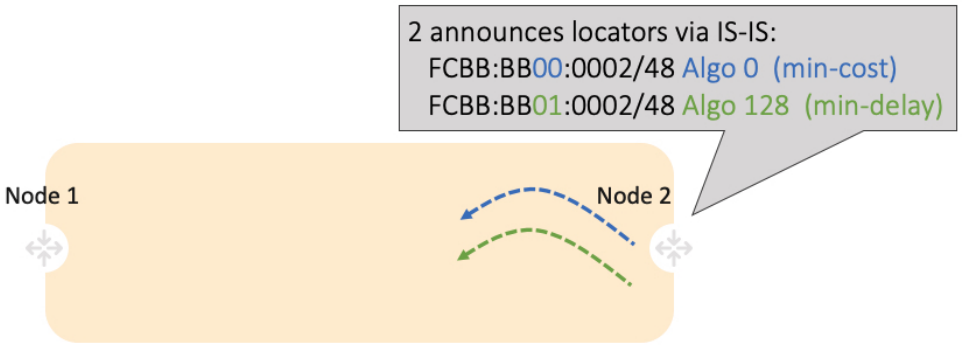


IS-IS in Node1 computes shortest paths for each locator and programs them in the FIB:

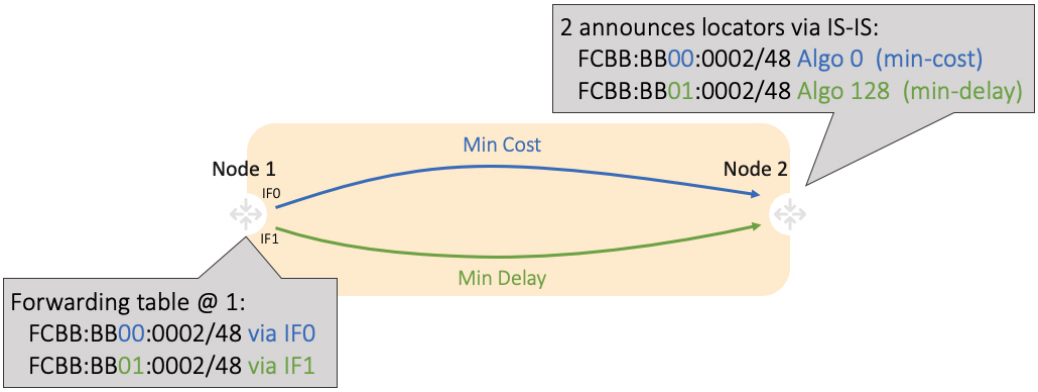


Node1 and Node2 are PEs of a common VPN. PEs advertise VPN routes via BGP with different transport SLAs. For example, traffic to a set of prefixes is to be delivered over the min-cost slice, while for another set of prefixes is to be delivered over the min-delay slice. To achieve this, the egress PE's service route advertisement includes the locator of the intended transport SLA type.

#### Use-case: VPN over Min-Cost Slice (Control Plane Behavior)

- Intuitive uSID program for routes advertised by Node2:
  - Within the Min-Cost Slice (FCBB:BB**00**)
  - Follow the shortest-path to Node2 (**0002**)
  - Execute VPN9 decapsulation function at Node2 (**F009**)
- Hardware Efficiency
  - Egress PE Node2 processes multiple uSIDs with a single /64 lookup
  - FCBB:BB**00**:**0002**:**F009**/64

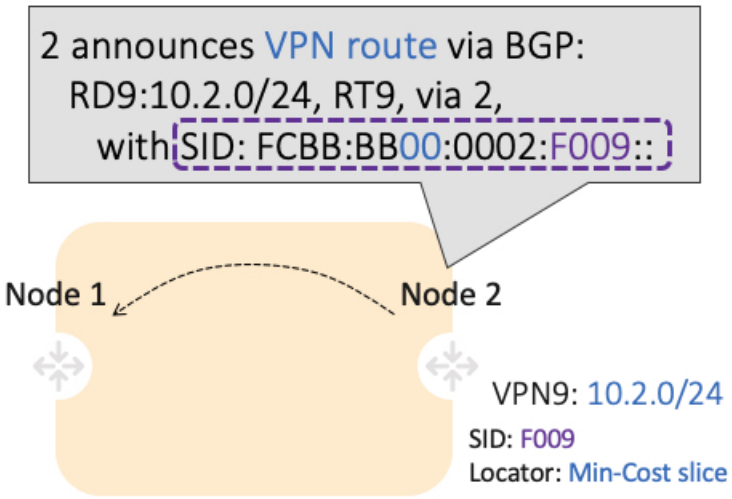


**Use-case: VPN over Min-Delay Slice (Control Plane Behavior)**

- Intuitive uSID program for routes advertised by Node2:
  - Within the Min-Delay Slice (FCBB:BB**01**)
  - Follow the shortest-path to Node2 (**0002**)
  - Execute VPN9 decapsulation at Node2 (**F009**)
- Hardware Efficiency
  - Egress PE 2 processes multiple uSIDs with a single /64 lookup
  - FCBB:BB**01**:**0002**:**F009**/64

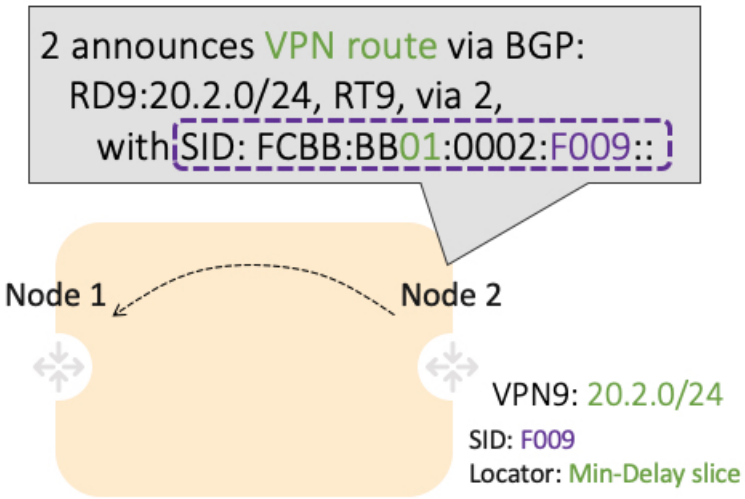

### Use-case: VPN over Min-Cost Slice (Data Plane Behavior)

1. Ingress PE (Node 1) learns via BGP that prefix 10.2.0.0/24 in VPN9 is reachable via SID FCBB:BB**00**:**0002**:**F009**
2. Node 1 programs the prefix with "VPN Encaps" behavior
3. When receiving traffic with DA IP matching the prefix 10.2.0.0/24 FIB entry, Node 1 encapsulates the incoming packet into IPv6 with DA of FCBB:BB**00**:**0002**:**F009**

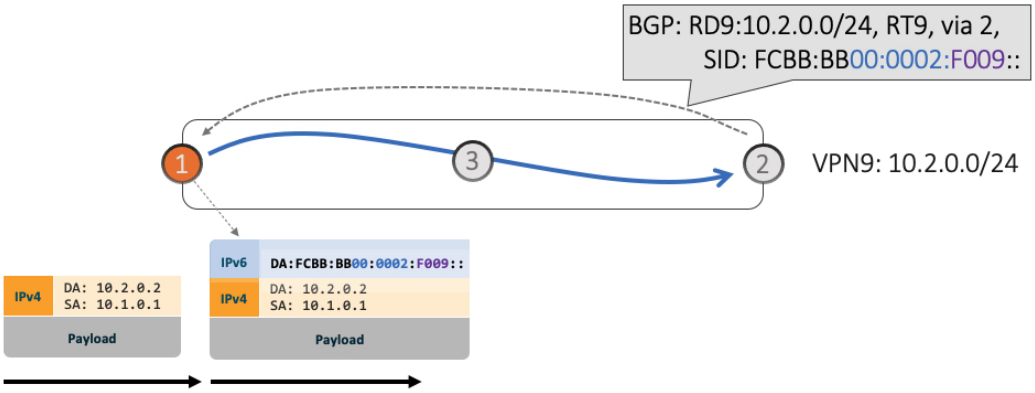


4. SRv6 allows for seamless deployment where any transit node (SRv6-capable or not) simply routes based on a /48 longest prefix match lookup.

   For example, transit node (Node 3) forwards traffic along the Algo 0 (min-cost) shortest path for the remote prefix FCBB:BB00:0002::/48.

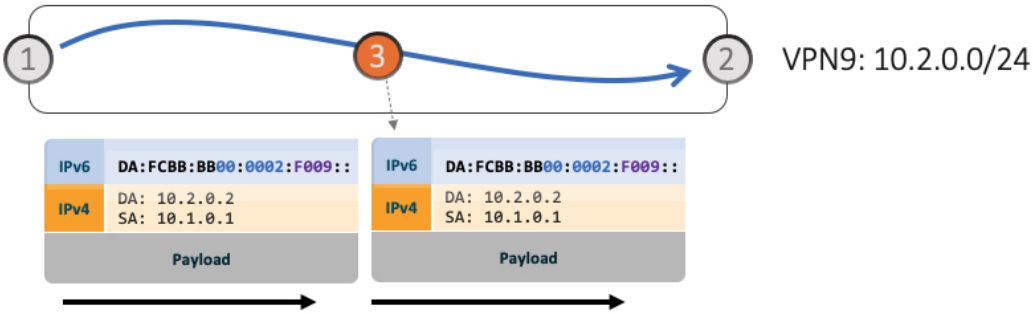


5. Egress PE (Node 2) matches local SID FCBB:BB00:0002:F009/64. Node 2 applies "VPN Decaps" behavior into VRF9 by removing the IPv6 encapsulation and looking up the payload's DA on the corresponding VPN table.

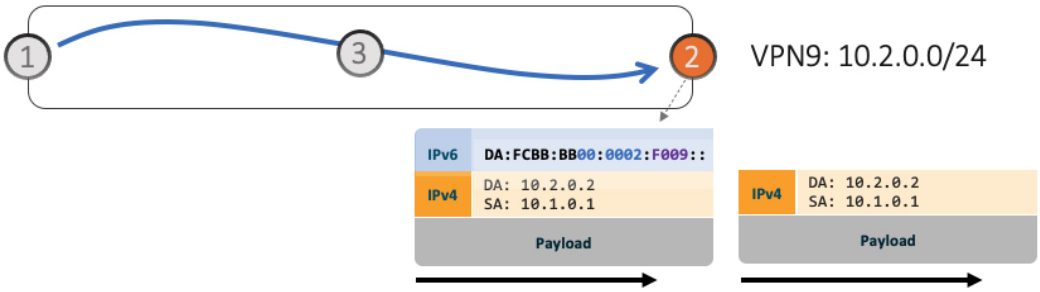


**Use-case: VPN over Min-Delay Slice (Data Plane Behavior)**

1. Ingress PE (Node 1) learns via BGP that prefix 20.2.0.0/24 in VPN9 is reachable via SID FCBB:BB**01**:**0002**:**F009**
2. Node 1 programs the prefix with "VPN Encaps" behavior
3. When receiving traffic with DA IP matching the prefix 20.2.0.0/24 FIB entry, Node 1 encapsulates the incoming packet into IPv6 with DA of FCBB:BB**01**:**0002**:**F009**
4. Transit node (Node 3) forwards traffic along the Algo 128 (min-delay) shortest path for the remote prefix FCBB:BB01:0002::/48.
5. Egress PE (Node 2) matches local SID FCBB:BB01:0002:F009/64. Node 2 applies "VPN Decaps" behavior into VRF9 by removing the IPv6 encapsulation and looking up the payload's DA on the corresponding VPN table.

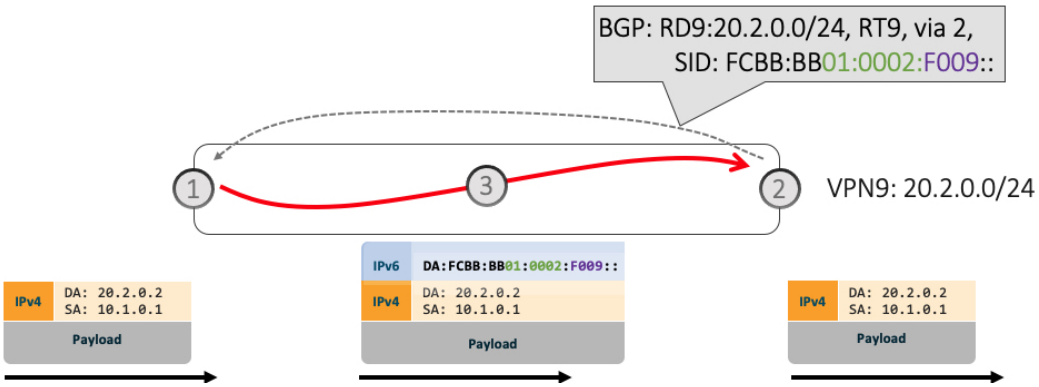


# Automated Steering

Automated steering (AS) allows service traffic to be automatically steered onto the required transport SLA path programmed by an SRv6 policy.

With AS, BGP automatically steers traffic onto an SRv6 policy based on the next-hop and color of a BGP service route. The color of a BGP service route is specified by a color extended community attribute. This color is used as a transport SLA indicator, such as min-delay or min-cost.

When the next-hop and color of a BGP service route matches the end-point and color of an SRv6 policy, BGP automatically installs the route resolving onto the BSID of the matching SRv6 policy. Recall that an SRv6 policy on a head-end is uniquely identified by an end-point and color.

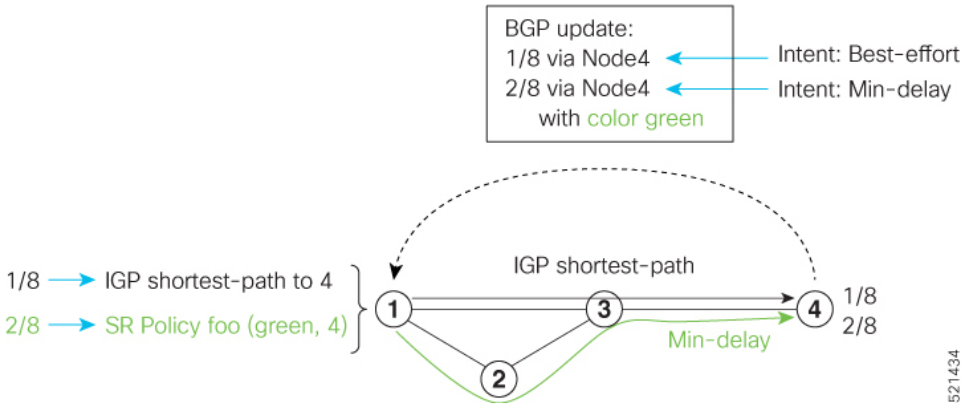


When a BGP route has multiple extended-color communities, each with a valid SRv6 policy, the BGP process installs the route on the SRv6 policy giving preference to the color with the highest numerical value.

The granularity of AS behaviors can be applied at multiple levels, for example:

- At a service level—When traffic destined to all prefixes in a given service is associated to the same transport path type. All prefixes share the same color.
- At a destination/prefix level—When traffic destined to a prefix in a given service is associated to a specific transport path type. Each prefix could be assigned a different color.
- At a flow level—When flows destined to the same prefix are associated with different transport path types

# SRv6-TE Policy Path Types

An **explicit** path is a specified SID-list or set of SID-lists.

A **dynamic** path is based on an optimization objective and a set of constraints. The head-end computes a solution, resulting in a SID-list or a set of SID-lists. When the topology changes, a new path is computed. If the head-end does not have enough information about the topology, the head-end might delegate the computation to a Segment Routing Path Computation Element (SR-PCE). For information on configuring SR-PCE, see *Configure Segment Routing Path Computation Element* chapter.

An SRv6-TE policy initiates a single (selected) path in RIB/FIB. This is the preferred valid candidate path.

A candidate path has the following characteristics:

- It has a preference – If two policies have same {color, endpoint} but different preferences, the policy with the highest preference is selected.
- It is associated with a single Binding SID (uB6) – A uB6 SID conflict occurs when there are different SRv6 policies with the same uB6 SID. In this case, the policy that is installed first gets the uB6 SID and is selected.
- It is valid if it is usable.

A path is selected when the path is valid and its preference is the best among all candidate paths for that policy.

**Note** The protocol of the source is not relevant in the path selection logic.

The following SRv6-TE policy path types are supported in this release:

- Explicit Paths
- Dynamic Paths, on page 186

# Explicit Paths

*Table 21: Feature History Table*

| Feature Name | Release | Description |
|---|---|---|
| Manual SRv6-TE Policies with Explicit Paths | Release 7.8.1 | This feature allows you to create an explicit list of segment IDs (SID list) for a candidate path or multiple candidate paths.<br>An explicit path can be a single SID list or set of SID lists. |

### Usage Guidelines and Limitations

A segment list can use uSIDs or uSID carrier, or a combination of both.

When configuring an explicit path using IP addresses of links along the path, the SRv6-TE process prefers the protected Adj-SID of the link, if one is available. In addition, when manual Adj-SIDs are configured, the SRv6-TE process prefers a manual protected Adj-SID over a dynamic protected Adj-SID.

You can configure the path to prefer the protected or unprotected Adj-SID, or to use only protected or unprotected Adj-SID. See Segment Protection-Type Constraint, on page 190.

You can enable SRv6-TE explicit segment list SID validation to allow the head-end node to validate the SIDs in an explicit SRv6-TE segment list against the SR-TE topology database. See SRv6-TE Explicit Segment List SID Validation, on page 184.

## Configure SRv6-TE Policy with Explicit Path

To configure an SRv6-TE policy with an explicit path, complete the following configurations:

1. Create the segment lists with SRv6 segments.
2. Create the SRv6-TE policy.

### Behaviors and Limitations

A segment list can use uSIDs or uSID carrier, or a combination of both.

### Configure Local SRv6-TE Policy Using Explicit Paths

Create a segment list with SRv6 uSIDs:

```
Router(config)# segment-routing traffic-eng
Router(config-sr-te)# segment-lists
Router(config-sr-te-segment-lists)# srv6
Router(config-sr-te-sl-global-srv6)# sid-format usid-f3216
Router(config-sr-te-sl-global-srv6)# exit
Router(config-sr-te-segment-lists)# segment-list p1_r8_1
Router(config-sr-te-sl)# srv6
Router(config-sr-te-sl-srv6)# index 10 sid FCBB:BB00:10:feff::
Router(config-sr-te-sl-srv6)# index 15 sid FCBB:BB00:100:fe00::
Router(config-sr-te-sl-srv6)# index 20 sid FCBB:BB00:1::
Router(config-sr-te-sl-srv6)# index 30 sid FCBB:BB00:1:fe00::
Router(config-sr-te-sl-srv6)# index 40 sid FCBB:BB00:fe00::
Router(config-sr-te-sl-srv6)# index 50 sid FCBB:BB00:5::
Router(config-sr-te-sl-srv6)# index 60 sid FCBB:BB00:6::
```

Create the SRv6-TE policy:

```
Router(config-sr-te)# policy POLICY1
Router(config-sr-te-policy)# srv6 locator loc1 binding-sid dynamic behavior ub6-insert-reduced
Router(config-sr-te-policy)# color 10 end-point ipv6 FCBB:BB00:2::1
Router(config-sr-te-policy)# candidate-paths
Router(config-sr-te-policy-path)# preference 100
Router(config-sr-te-policy-path-pref)# explicit segment-list p1_r8_1
Router(config-sr-te-pp-info)# exit
Router(config-sr-te-policy-path-pref)# exit
```

### Running Configuration

```
Router# show running-config

. . .

segment-routing
 traffic-eng
  segment-lists
   srv6
    sid-format usid-f3216
   !
   segment-list p1_r8_1
    srv6
     index 10 sid FCBB:BB00:10:feff::
     index 15 sid FCBB:BB00:100:fe00::
     index 20 sid FCBB:BB00:1::
     index 30 sid FCBB:BB00:1:fe00::
     index 40 sid FCBB:BB00:fe00::
     index 50 sid FCBB:BB00:5::
     index 60 sid FCBB:BB00:6::
    !
   !
  !
  policy POLICY1
   srv6
    locator loc1 binding-sid dynamic behavior ub6-insert-reduced
   !
   color 10 end-point ipv6 fcbb:bb00:2::1
   candidate-paths
    preference 100
     explicit segment-list p1_r8_1
     !
```

```
    !
   !
  !
 !
!
```

### Verification

Verify the SR-TE policy configuration using:

```
Router# show segment-routing traffic-eng policy name srte_c_10_ep_fcbb:bb00:2::1 d

SR-TE policy database
---------------------

Color: 10, End-point: fcbb:bb00:2::1
  Name: srte_c_10_ep_fcbb:bb00:2::1
  Status:
    Admin: up  Operational: down for 00:01:30 (since Oct 31 21:33:24.090)
  Candidate-paths:
    Preference: 100 (configuration) (inactive)
      Name: POLICY1
      Requested BSID: dynamic
      Constraints:
        Protection Type: protected-preferred
        Maximum SID Depth: 13
      Explicit: segment-list p1_r8_1 (inactive)
        Weight: 1, Metric Type: TE
          SID[0]: FCBB:BB00:10:feff::
          SID[1]: FCBB:BB00:100:fe00::
          SID[2]: FCBB:BB00:1::
          SID[3]: FCBB:BB00:1:fe00::
          SID[4]: FCBB:BB00:fe00::
          SID[5]: FCBB:BB00:5::
          SID[6]: FCBB:BB00:6::
      SRv6 Information:
        Locator: loc1
        Binding SID requested: Dynamic
        Binding SID behavior: End.B6.Insert.Red
  Attributes:
    Forward Class: 0
    Steering labeled-services disabled: no
    Steering BGP disabled: no
    IPv6 caps enable: yes
    Invalidation drop enabled: no
    Max Install Standby Candidate Paths: 0
```

### Candidate Paths with Weighted SID Lists

If a candidate path is associated with a set of segment lists, each segment list is associated with weight for weighted load balancing. Valid values for weight are from 1 to 4294967295; the default weight is 1.

If a set of segment lists is associated with the active path of the policy, then the steering is per-flow and weighted-ECMP (W-ECMP) based according to the relative weight of each segment list.

The fraction of the flows associated with a given segment list is *w*/*Sw*, where *w* is the weight of the segment list and *Sw* is the sum of the weights of the segment lists of the selected path of the SR policy.

When a composite candidate path is active, the fraction of flows steered into each constituent SR policy is equal to the relative weight of each constituent SR policy. Further load balancing of flows steered into a

constituent SR policy is performed based on the weights of the segment list of the active candidate path of that constituent SR policy.

### Configuration Example

```
Router(config)# segment-routing traffic-eng
Router(config-sr-te)# segment-lists
Router(config-sr-te-segment-lists)# srv6
Router(config-sr-te-sl-global-srv6)# sid-format usid-f3216
Router(config-sr-te-sl-global-srv6)# exit
Router(config-sr-te-segment-lists)# segment-list p1_r8_3
Router(config-sr-te-sl)# srv6
Router(config-sr-te-sl-srv6)# index 10 sid FCBB:BB00:10:fe01::
Router(config-sr-te-sl-srv6)# index 20 sid FCBB:BB00:1::
Router(config-sr-te-sl-srv6)# index 30 sid FCBB:BB00:1:fe00::
Router(config-sr-te-sl-srv6)# index 40 sid FCBB:BB00:fe00::
Router(config-sr-te-sl-srv6)# index 50 sid FCBB:BB00:5::
Router(config-sr-te-sl-srv6)# index 60 sid FCBB:BB00:6::
Router(config-sr-te-segment-lists)# segment-list igp_ucmp1
Router(config-sr-te-sl)# srv6
Router(config-sr-te-sl-srv6)# index 10 sid FCBB:BB00:1::
Router(config-sr-te-sl-srv6)# index 20 sid FCBB:BB00:4::
Router(config-sr-te-sl-srv6)# index 30 sid FCBB:BB00:5::
Router(config-sr-te-sl-srv6)# exit
Router(config-sr-te-sl)# exit
Router(config-sr-te-segment-lists)# exit

Router(config-sr-te)# policy po_r8_1001
Router(config-sr-te-policy)# srv6 locator loc1 binding-sid dynamic behavior ub6-insert-reduced
Router(config-sr-te-policy)# color 1001 end-point ipv6 FCBB:BB00:2::1
Router(config-sr-te-policy)# candidate-paths
Router(config-sr-te-policy-path)# preference 1000
Router(config-sr-te-policy-path-pref)# explicit segment-list p1_r8_3
Router(config-sr-te-pp-info)# weight 4
Router(config-sr-te-pp-info)# exit
Router(config-sr-te-policy-path-pref)# explicit segment-list igp_ucmp1
Router(config-sr-te-pp-info)# weight 2
Router(config-sr-te-pp-info)# exit
```

### Running Configuration

```
Router# show running-config

. . .

segment-routing
 traffic-eng
  segment-lists
   srv6
    sid-format usid-f3216
   !
   segment-list p1_r8_3
    srv6
     index 10 sid FCBB:BB00:10:fe01::
     index 20 sid FCBB:BB00:1::
     index 30 sid FCBB:BB00:1:fe00::
     index 40 sid FCBB:BB00:fe00::
     index 50 sid FCBB:BB00:5::
     index 60 sid FCBB:BB00:6::
    !
```

```
    !
    segment-list igp_ucmp1
     srv6
      index 10 sid FCBB:BB00:1::
      index 20 sid FCBB:BB00:4::
      index 30 sid FCBB:BB00:5::
     !
    !
   !
   policy po_r8_1001
    srv6
     locator loc1 binding-sid dynamic behavior ub6-insert-reduced
    !
    color 1001 end-point ipv6 fcbb:bb00:2::1
    candidate-paths
     preference 1000
      explicit segment-list p1_r8_3
       weight 4
      !
      explicit segment-list igp_ucmp1
       weight 2
      !
     !
    !
   !
  !
!
```

## SRv6-TE Explicit Segment List SID Validation

*Table 22: Feature History Table*

| Feature Name | Release Information | Feature Description |
|---|---|---|
| SRv6-TE Explicit Segment List SID Validation | Release 7.8.1 | This feature provides a way for the head-end node to validate the SIDs in an explicit SRv6-TE segment list against the SR-TE topology database.<br>If any SID in the segment list is not found on the head-end, the validation fails, and the policy remains down. |

SRv6-TE explicit segment list SID validation evaluates whether the explicit segment list of an SR policy's candidate path is valid and therefore usable. The head-end node validates if the hops are in the SR-TE topology database.

When enabled, the segment list SID validation occurs before programming the SR policy and after an IGP topology change.

When the segment list validation fails, then the segment list is declared invalid. An SR policy candidate path is declared invalid when it has no valid segment lists. An SR policy is declared invalid when it has no valid candidate paths.

### Usage Guidelines and Limitations

- Segment list SID validation can be enabled globally for all SRv6 explicit segment lists or for a specific SRv6 segment list.

- If SIDs in an explicit segment list are expected to not be found in the headend (for example, a multi-domain case), the topology check can be disabled for that segment list.
- The SR-TE topology should distributed from IGP (for intra-domain paths) or from BGP-LS (for multi-domain paths).
- The SRv6 segment list in an explicit candidate path of an SRv6 policy cannot be empty.
- All segments in a segment list must be of same data plane type: SRv6 or SR-MPLS.
- Top SID validation occurs by performing path resolution using the top SID.
- All SIDs in segment list are validated against local SID block and SID format.
- A segment list is validated against MSD.

### Configuration

Prior to enabling SRv6 explicit segment list SID validation, use the **show segment-routing traffic-eng topology** command to verify if the SR-TE topology is available on the headend PCC router.

To enable SID validation globally, use the **segment-routing traffic-eng segment-lists srv6 topology-check** command.

To enable SID validation for a specific explicit SID list, use the **segment-routing traffic-eng segment-lists segment-list** *name* **srv6 topology-check** command.

### Configuration Example

The following example shows how to enable SID validation globally for all SRv6 explicit segment lists:

```
Router(config)# segment-routing traffic-eng
Router(config-sr-te)# segment-lists
Router(config-sr-te-segment-lists)# srv6
Router(config-sr-te-sl-global-srv6)# topology-check
```

The following example shows how to enable SID validation for a specific SRv6 explicit segment list:

```
Router(config)# segment-routing traffic-eng
Router(config-sr-te)# segment-lists
Router(config-sr-te-segment-lists)# segment-list p1_r8_1
Router(config-sr-te-sl)# srv6
Router(config-sr-te-sl-srv6)# topology-check
```

The following example shows how to enable SID validation globally and disable SID validation for a specific SRv6 explicit segment list:

```
Router(config)# segment-routing traffic-eng
Router(config-sr-te)# segment-lists
Router(config-sr-te-segment-lists)# srv6
Router(config-sr-te-sl-global-srv6)# topology-check
Router(config-sr-te-sl-global-srv6)# exit
Router(config-sr-te-segment-lists)# segment-list p1_r8_1
Router(config-sr-te-sl)# srv6
Router(config-sr-te-sl-srv6)# no topology-check
```

### Running Configuration

```
segment-routing
 traffic-eng
  segment-lists
   srv6
    topology-check
   !
   segment-list p1_r8_1
    srv6
     no topology-check
    !
   !
  !
 !
!
```

### Verification

```
Router# show segment-routing traffic-eng policy name srte_c_10_ep_fcbb:bb00:2::1 detail

SR-TE policy database
---------------------

Color: 10, End-point: fcbb:bb00:2::1
  Name: srte_c_10_ep_fcbb:bb00:2::1
  Status:
    Admin: up  Operational: down for 00:04:12 (since Nov  7 19:24:21.396)
  Candidate-paths:
    Preference: 100 (configuration) (inactive)
      Name: POLICY1
      Requested BSID: dynamic
      Constraints:
        Protection Type: protected-preferred
        Maximum SID Depth: 13
      Explicit: segment-list p1_r8_1 (inactive)
        Weight: 1, Metric Type: TE
          SID[0]: fccc:0:10:feff::
          SID[1]: fccc:0:100:fe00::
          SID[2]: fccc:0:1::
          SID[3]: fccc:0:1:fe00::
          SID[4]: fccc:0:fe00::
          SID[5]: fccc:0:5::
          SID[6]: fccc:0:6::
      SRv6 Information:
        Locator: loc1
        Binding SID requested: Dynamic
        Binding SID behavior: End.B6.Insert.Red
  Attributes:
    Forward Class: 0
    Steering labeled-services disabled: no
    Steering BGP disabled: no
    IPv6 caps enable: yes
    Invalidation drop enabled: no
    Max Install Standby Candidate Paths: 0
```

# Dynamic Paths

### Behaviors and Limitations

For a dynamic path that traverses a specific interface between nodes (segment), the algorithm may encode this segment using an Adjacency uSID (uA SID).

# Optimization Objectives

Optimization objectives allow the head-end router to compute a uSID-list that expresses the shortest dynamic path according to the selected metric type:

- Hopcount — Use the least number of hops for path computation.
- IGP metric — Refer to the "Implementing IS-IS" and "Implementing OSPF" chapters in the *Routing Configuration Guide for Cisco ASR 9000 Series Routers*.
- TE metric — See the Configure Interface TE Metrics, on page 320 section for information about configuring TE metrics.
- Delay (latency) — See the Configure Performance Measurement, on page 499 chapter for information about measuring delay for links or SRv6 policies.

This example shows a dynamic path from head-end router 1 to end-point router 3 that minimizes IGP or TE metric:

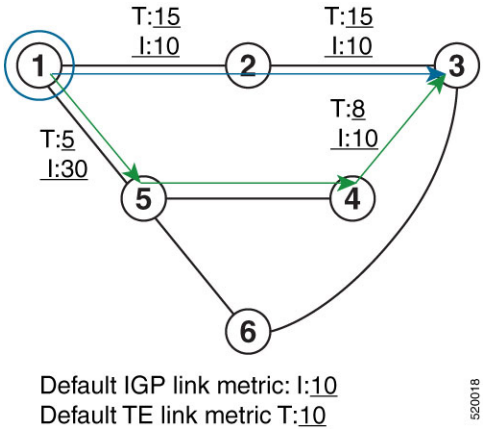


- The blue path uses the minimum IGP metric: Min-Metric (1 → 3, IGP) = uSID-list {cafe:0:**3**::}; cumulative IGP metric: 20
- The green path uses the minimum TE metric: Min-Metric (1 → 3, TE) = uSID-list {cafe:0:**5**:**4**:**3**::}; cumulative TE metric: 23

## Configure Interface TE Metrics

Use the **metric** *value* command in SR-TE interface submode to configure the TE metric for interfaces. The *value* range is from 0 to 2147483647.

```
Router# configure
Router(config)# segment-routing
Router(config-sr)# traffic-eng
Router(config-sr-te)# interface type interface-path-id
Router(config-sr-te-if)# metric value
```

### Configuring TE Metric: Example

The following configuration example shows how to set the TE metric for various interfaces:

```
segment-routing
 traffic-eng
```

```
  interface TenGigE0/0/0/0
   metric 100
  !
  interface TenGigE0/0/0/1
   metric 1000
  !
  interface TenGigE0/0/2/0
   metric 50
  !
 !
end
```

## Constraints

Constraints allow the head-end router to compute a dynamic path according to the selected metric type:

**Note** For path-computation on PCE, configuring both affinity and disjoint-path is not supported.

- Affinity — You can apply a color or name to links or interfaces by assigning affinity bit-maps to them. You can then specify an affinity (or relationship) between an SRv6 policy path and link colors. SRv6-TE computes a path that includes or excludes links that have specific colors,or combinations of colors. See the Named Interface Link Admin Groups and SR-TE Affinity Maps, on page 321 section for information on named interface link admin groups and SRv6-TE Affinity Maps.
- Disjoint — SRv6-TE computes a path that is disjoint from another path in the same disjoint-group. Disjoint paths do not share network resources. Path disjointness may be required for paths between the same pair of nodes, between different pairs of nodes, or a combination (only same head-end or only same end-point).
- Segment protection-type behavior — You can control whether protected or unprotected segments are used when encoding the SID-list of an SRv6 policy candidate path. The types of segments that could be used when building a SID-list include uSIDs and adjacency SIDs (uA SID). See the Segment Protection-Type Constraint, on page 190 for details and usage guidelines.

### Named Interface Link Admin Groups and SRv6-TE Affinity Maps

Named Interface Link Admin Groups and SRv6-TE Affinity Maps provide a simplified and more flexible means of configuring link attributes and path affinities to compute paths for SRv6-TE policies.

In the traditional TE scheme, links are configured with attribute-flags that are flooded with TE link-state parameters using Interior Gateway Protocols (IGPs), such as Open Shortest Path First (OSPF).

Named Interface Link Admin Groups and SRv6-TE Affinity Maps let you assign, or map, up to 256 color names for affinity and attribute-flag attributes instead of 32-bit hexadecimal numbers. After mappings are defined, the attributes can be referred to by the corresponding color name in the CLI. Furthermore, you can define constraints using *include-any*, *include-all*, and *exclude-any* arguments, where each statement can contain up to 10 colors.

**Note** You can configure affinity constraints using attribute flags or the Flexible Name Based Policy Constraints scheme; however, when configurations for both schemes exist, only the configuration pertaining to the new scheme is applied.

*Configure Named Interface Link Admin Groups and SRv6-TE Affinity Maps*

Use the **segment-routing traffic-eng interface** *interface* **affinity name** *NAME* command to assign affinity to interfaces. Configure this on routers with interfaces that have an associated admin group attribute.

Use the **segment-routing traffic-eng affinity-map name** *NAME* **bit-position** *bit-position* command to define affinity maps. The *bit-position* range is from 0 to 255.

Configure affinity maps on the following routers:

- Routers with interfaces that have an associated admin group attribute.
- Routers that act as SRv6-TE head-ends for SR policies that include affinity constraints.

### Configuring Link Admin Group: Example

The following example shows how to assign affinity to interfaces and to define affinity maps. This configuration is applicable to any router (SRv6-TE head-end or transit node) with colored interfaces.

```
Router(config)# segment-routing
Router(config-sr)# traffic-eng
Router(config-sr-te)# interface HundredGigE0/0/0/0
Router(config-sr-if)# affinity
Router(config-sr-if-affinity)# name brown
Router(config-sr-if-affinity)# exit
Router(config-sr-if)# exit

Router(config-sr-te)# affinity-map
Router(config-sr-te-affinity-map)# name brown bit-position 1
```

### Running Config

```
segment-routing
 traffic-eng
  interface HundredGigE0/0/0/0
   affinity
    name brown
   !
  !
  affinity-map
   name brown bit-position 1
  !
end
```

## Segment Protection-Type Constraint

*Table 23: Feature History Table*

| Feature Name | Release Information | Feature Description |
|---|---|---|
| Segment Protection-Type Constraint | Release 7.4.1 | This feature introduces the ability to control whether protected or unprotected segments are used when encoding the SID-list of an SR policy candidate path.<br>The types of segments that could be used when building a SID-list include prefix SIDs and adjacency SIDs. |

This feature introduces the ability to control whether protected or unprotected segments are used when encoding the SID-list of an SRv6 policy candidate path. The types of segments that could be used when building a SID-list include uSIDs and adjacency SIDs (uA SID).

A prefix SID is a global segment representing a prefix that identifies a specific node. A prefix SID is programmed with a backup path computed by the IGP using TI-LFA.

An adjacency SID is a local segment representing an IGP adjacency. An adjacency SID can be programmed with or without protection. Protected adjacency SIDs are programmed with a link-protectant backup path computed by the IGP (TI-LFA) and are used if the link associated with the IGP adjacency fails.

Prefix SIDs and adjacency SIDs can be leveraged as segments in a SID-list in order to forward a packet along a path traversing specific nodes and/or over specific interfaces between nodes. The type of segment used when encoding the SID-list will determine whether failures along the path would be protected by TI-LFA. Depending on the offering, an operator may want to offer either unprotected or protected services over traffic engineered paths.

The following behaviors are available with the segment protection-type constraint:

- **protected-only** — The SID-list must be encoded using protected segments.
- **protected-preferred** — The SID-list should be encoded using protected segments if available; otherwise, the SID-list may be encoded using unprotected Adj-SIDs. This is the default behavior when no segment protection-type constraint is specified.
- **unprotected-only** — The SID-list must be encoded using unprotected Adj-SID.
- **unprotected-preferred** — The SID-list should be encoded using unprotected Adj-SID if available, otherwise SID-list may be encoded using protected segments.

### Usage Guidelines and Limitations

Observe the following guidelines and limitations for the platform:

- This constraint applies to candidate-paths of manual SR policies with dynamically computed paths.
- PCEP has been augmented (vendor-specific object) to allow a PCC to indicate the segment protection-type constraint to the PCE.

- When the segment protection type constraint is protected-only or unprotected-only, the path computation must adhere to the constraint. If the constraint is not satisfied, the SRv6 policy will not come up on such candidate path.
- When the segment protection-type constraint is unprotected-only, the entire SID-list must be encoded with unprotected Adj-SIDs.
- When the segment protection-type constraint is protected-only, the entire SID-list must be encoded with protected Adj-SIDs or Prefix SIDs.

### Configuring Segment Protection-Type Constraint

Use the **constraints segments protection** {**protected-only** | **protected-preferred** | **unprotected-only** | **unprotected-preferred**} command to configure the segment protection-type behavior.

The following example shows how to configure the policy with a SID-list that must be encoded using protected segments:

```
Router(config-sr-te)# policy POLICY1
Router(config-sr-te-policy)# color 10 end-point ipv6 2:2::22
Router(config-sr-te-policy)# candidate-paths
Router(config-sr-te-policy-path)# preference 100
Router(config-sr-te-policy-path-pref)# constraints
Router(config-sr-te-path-pref-const)# segments
Router(config-sr-te-path-pref-const-seg)# protection protected-only
```

The following example shows how to configure the SRv6 ODN policy that must be encoded using protected segments:

```
Router(config)# segment-routing traffic-eng
Router(config-sr-te)# on-demand color 20
Router(config-sr-te-color)# constraints
Router(config-sr-te-color-const)# segments
Router(config-sr-te-color-const-seg)# protection protected-only
```

## Configure SRv6 Policy with Dynamic Path

To configure a SRv6-TE policy with a dynamic path, optimization objectives, and affinity constraints, complete the following configurations:

1. Define the optimization objectives. See the Optimization Objectives, on page 319 section.
2. Define the constraints. See the Constraints, on page 320 section.
3. Create the policy.

### Behaviors and Limitations

For a dynamic path that traverses a specific interface between nodes (segment), the algorithm may encode this segment using an Adjacency micro-SID (uA SID).

### Configuration

#### Create the SRv6-TE Policy

- Use the **segment-routing traffic-eng policy** *policy* **srv6 color** *color* **end-point ipv6** *ipv6-address* command to configure the SRv6-TE policy color and IPv6 end-point address.

```
Node1(config)# segment-routing traffic-eng policy pol_node1_node4_te srv6 color 50
end-point ipv6 cafe:0:4::4
```

### Specify Customized Locator and Source Address

- (Optional) Use the **segment-routing traffic-eng policy** *policy* **srv6 locator** *locator* **binding-sid dynamic behavior ub6-insert-reduced** command to specify the customized per-policy locator and BSID behavior. If you do not specify a customized per-policy locator and BSID behavior, the policy will use the global locator and BSID behavior.

```
Node1(config)# segment-routing traffic-eng policy pol_node1_node4_te srv6 locator node1
 binding-sid dynamic behavior ub6-insert-reduced
```

- (Optional) Use the **segment-routing traffic-eng policy** *policy* **source-address ipv6** *ipv6-address* command to specify the customized IPv6 source address for candidate paths. If you do not specify a customized per-policy source address, the policy will use the local IPv6 source address.

```
Node1(config)# segment-routing traffic-eng policy pol_node1_node4_te srv6 source-address
 ipv6 cafe:0:1::1
```

### Enable Dynamic Path Computed by the SR-PCE

- Use the **segment-routing traffic-eng policy** *policy* **candidate-paths preference** *preference* **dynamic pcep** command to specify the candidate path preference and enable dynamic path computed by the SR-PCE. The range for *preference* is from 1 to 65535.

```
Node1(config)# segment-routing traffic-eng policy pol_node1_node4_te candidate-paths
preference 100 dynamic pcep
```

### Configure Dynamic Path Optimization Objectives

- Use the **segment-routing traffic-eng policy** *policy* **candidate-paths preference** *preference* **dynamic metric type** {**igp** | **te** | **latency**} command to configure the metric for use in path computation.

```
Node1(config)# segment-routing traffic-eng policy pol_node1_node4_te candidate-paths
preference 100 metric type te
```

- Use the **segment-routing traffic-eng policy** *policy* **candidate-paths preference** *preference* **dynamic metric margin** {**absolute** *value*| **relative** *percent*} command to configure the dynamic path metric margin. The range for *value* and *percent* is from 0 to 2147483647.

```
Node1(config)# segment-routing traffic-eng policy pol_node1_node4_te candidate-paths
preference 100 metric margin absolute 5
```

### Configure Dynamic Path Constraints

**Note** Disjoint-path and affinity constraints cannot be configured at the same time.

- Use the **segment-routing traffic-eng policy** *policy* **candidate-paths preference** *preference* **constraints affinity** {**exclude-any** | **include-all** | **include-any**} *name* command to configure the affinity constraints.

```
Node1(config)# segment-routing traffic-eng policy pol_node1_node4_te candidate-paths
preference 100 constraints affinity exclude-any name brown
```

- Use the **segment-routing traffic-eng policy** *policy* **candidate-paths preference** *preference* **constraints disjoint-path group-id** *group-id* **type** {**link** | **node** | **srlg** | **srlg-node**} [**sub-id** *sub-id*] command to configure the disjoint-path constraints. The *group-id* and *sub-id* range is from 1 to 65535

```
Node1(config)# segment-routing traffic-eng policy pol_node1_node4_te candidate-paths
preference 100 constraints disjoint-path group-id 775 type link
```

- Use the **segment-routing traffic-eng policy** *policy* **candidate-paths preference** *preference* **constraints segments protection** {**protected-only** | **protected-preferred** | **unprotected-only** | **unprotected-preferred**} command to configure the segment protection-type behavior.

  See Segment Protection-Type Constraint, on page 190 for details about the segment protection-type constraint.

  The following example shows how to configure the policy with a SID-list that must be encoded using protected segments:

```
Node1(config)# segment-routing traffic-eng policy pol_node1_node4_te candidate-paths
preference 100 constraints segments protection protected-only
```

## Examples

The following example shows a configuration of an SRv6 policy at an SRv6-TE head-end router using the global locator and source address. The policy has a dynamic path with optimization objectives and affinity constraints computed by the SR-PCE.

```
Node1(config)# segment-routing
Node1(config-sr)# traffic-eng
Node1(config-sr-te)# srv6
Node1(config-sr-te-srv6)# locator Node1 binding-sid dynamic behavior ub6-insert-reduced
Node1(config-sr-te-srv6)# exit
Node1(config-sr-te)# candidate-paths
Node1(config-sr-te-candidate-path)# all
Node1(config-sr-te-candidate-path-type)# source-address ipv6 cafe:0:1::1
Node1(config-sr-te-candidate-path-type)# exit
Node1(config-sr-te-candidate-path)# exit

Node1(config-sr-te)# policy pol_node1_node4_te
Node1(config-sr-te-policy)# color 20 end-point ipv6 cafe:0:4::4
Node1(config-sr-te-policy)# candidate-paths
Node1(config-sr-te-policy-path)# preference 100
Node1(config-sr-te-policy-path-pref)# dynamic
Node1(config-sr-te-pp-info)# pcep
Node1(config-sr-te-path-pcep)# exit
Node1(config-sr-te-pp-info)# metric type te
Node1(config-sr-te-pp-info)# exit
Node1(config-sr-te-policy-path-pref)# constraints
Node1(config-sr-te-path-pref-const)# affinity
Node1(config-sr-te-path-pref-const-aff)# exclude-any
Node1(config-sr-te-path-pref-const-aff-rule)# name brown
```

## Running Config

```
segment-routing
 traffic-eng
  srv6
```

```
   locator Node1 binding-sid dynamic behavior ub6-insert-reduced
  !
  candidate-paths
   all
    source-address ipv6 cafe:0:1::1
   !
  !
  policy pol_node1_node4_te
   color 20 end-point ipv6 cafe:0:4::4
   candidate-paths
    preference 100
     dynamic
      pcep
      !
      metric
       type te
      !
     !
     constraints
      affinity
       exclude-any
        name brown
       !
      !
     !
    !
   !
  !
 !
!
```

The following example shows a configuration of a manual SRv6 policy at an SRv6-TE head-end router with customized locator and source address. The policy has a dynamic path with optimization objectives and affinity constraints computed by the SR-PCE.

```
Node1(config)# segment-routing
Node1(config-sr)# traffic-eng
Node1(config-sr-te)# policy pol_node1_node4_te
Node1(config-sr-te-policy)# source-address ipv6 cafe:0:1::1
Node1(config-sr-te-policy)# srv6
Node1(config-sr-te-policy-srv6)# locator Node1 binding-sid dynamic behavior ub6-insert-reduced
Node1(config-sr-te-policy-srv6)# exit
Node1(config-sr-te-policy)# color 20 end-point ipv6 cafe:0:4::4
Node1(config-sr-te-policy)# candidate-paths
Node1(config-sr-te-policy-path)# preference 100
Node1(config-sr-te-policy-path-pref)# dynamic
Node1(config-sr-te-pp-info)# pcep
Node1(config-sr-te-path-pcep)# exit
Node1(config-sr-te-pp-info)# metric type te
Node1(config-sr-te-pp-info)# exit
Node1(config-sr-te-policy-path-pref)# constraints
Node1(config-sr-te-path-pref-const)# affinity
Node1(config-sr-te-path-pref-const-aff)# exclude-any
Node1(config-sr-te-path-pref-const-aff-rule)# name brown
```

### Running Config

```
segment-routing
 traffic-eng
  policy pol_node1_node4_te
   srv6
    locator Node1 binding-sid dynamic behavior ub6-insert-reduced
   !
```

```
   source-address ipv6 cafe:0:1::1
   color 20 end-point ipv6 cafe:0:4::4
   candidate-paths
    preference 100
     dynamic
      pcep
      !
      metric
       type te
      !
     !
     constraints
      affinity
       exclude-any
        name brown
       !
      !
     !
    !
   !
  !
 !
```

## Verification

```
Node1# show segment-routing traffic-eng policy color 20

SR-TE policy database
---------------------
Color: 20, End-point: cafe:0:4::4
  Name: srte_c_20_ep_cafe:0:4::4
  Status:
    Admin: up  Operational: down for 00:00:09 (since Nov  5 20:10:26.158)
  Candidate-paths:
    Preference: 100 (configuration)
      Name: pol_node1_node4_te
      Requested BSID: dynamic
      PCC info:
        Symbolic name: cfg_pol_node1_node4_te_discr_100
        PLSP-ID: 1
        Protection Type: unprotected-preferred
        Maximum SID Depth: 13
      Dynamic (pce cafe:0:2::2) (valid)
        Metric Type: NONE,   Path Accumulated Metric: 0
      SRv6 Information:
        Locator: Node1
        Binding SID requested: Dynamic
        Binding SID behavior: End.B6.Insert.Red
  Attributes:
    Forward Class: 0
    Steering labeled-services disabled: no
    Steering BGP disabled: no
    IPv6 caps enable: yes
    Invalidation drop enabled: no
```

# Protocols

## Path Computation Element Protocol

The path computation element protocol (PCEP) describes a set of procedures by which a path computation client (PCC) can report and delegate control of head-end label switched paths (LSPs) sourced from the PCC to a PCE peer. The PCE can request the PCC to update and modify parameters of LSPs it controls. The stateful model also enables a PCC to allow the PCE to initiate computations allowing the PCE to perform network-wide orchestration.

**Note** Refer to the Usage Guidelines and Limitations, on page 172 section for information about SR-PCE compatibility with different IOS XR releases.

A PCEP channel is established over TCP and has its own light-weight Keep-Alive (KA) mechanism

Upon configuring a PCE peer, a PCC opens a PCEP session to the PCE, and the PCE accepts the PCEP sessions if the following conditions are satisfied:

- The total number of PCEP sessions does not exceed the limit on the total number of PCEP sessions on the PCE.
- The KA interval indicated by PCC is acceptable to the PCE.

### Sample Workflow with Stateful PCEP

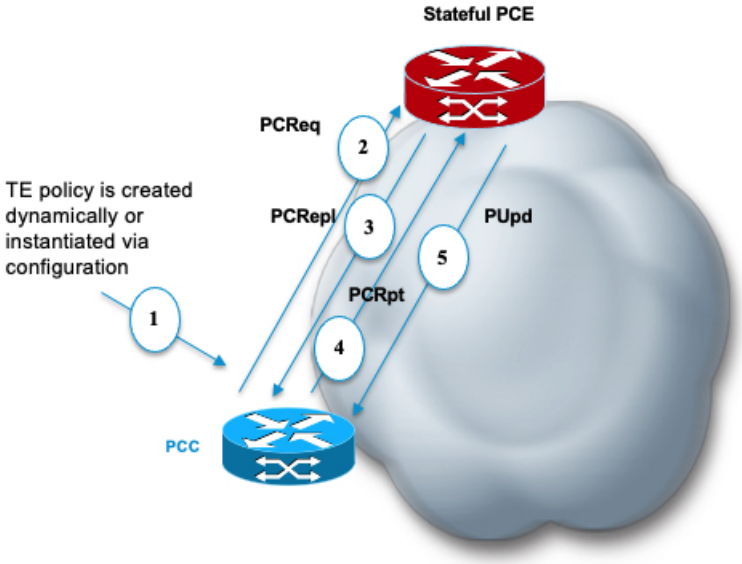


1. The PCC is configured to instantiate an SRv6-TE policy.
2. The PCC sends a PCEP Path Computation Request (PCReq) to the PCE, requesting a path by specifying path attributes, optimization objectives, and constraints.

3. The PCE stores the request, computes a TE metric shortest-path, and returns the computed SID list in a PCEP Path Computation Reply (PCRepl).
4. The PCC allocates a BSID and activates the SR Policy using the SID list computed by the PCE. The PCC sends a Path Computation Report (PCRpt) to the PCE, delegating the SR Policy to the PCE and including BSID.
5. The PCE updates the paths when required (for example, following a multi-domain topology change that impacts connectivity).

# Configure the Head-End Router as PCEP PCC

Configure the head-end router as PCEP Path Computation Client (PCC) to establish a connection to the PCE. The PCC and PCE addresses must be routable so that TCP connection (to exchange PCEP messages) can be established between PCC and PCE.

### Configure the PCC to Establish a Connection to the PCE

Use the **segment-routing traffic-eng pcc** command to configure the PCC source address, the SR-PCE address, and SR-PCE options.

A PCE can be given an optional precedence. If a PCC is connected to multiple PCEs, the PCC selects a PCE with the lowest precedence value. If there is a tie, a PCE with the highest IP address is chosen for computing path. The precedence *value* range is from 0 to 255.

```
Router(config)# segment-routing
Router(config-sr)# traffic-eng
Router(config-sr-te)# pcc
Router(config-sr-te-pcc)# source-address ipv6 ipv6-local-source-address
Router(config-sr-te-pcc)# pce address ipv6 ipv6-PCE-address[precedence value]
```

### Configure PCEP Authentication

TCP Message Digest 5 (MD5) authentication has been used for authenticating PCEP (TCP) sessions by using a clear text or encrypted password. This feature introduces support for TCP Authentication Option (TCP-AO), which replaces the TCP MD5 option.

TCP-AO uses Message Authentication Codes (MACs), which provides the following:

- Protection against replays for long-lived TCP connections
- More details on the security association with TCP connections than TCP MD5
- A larger set of MACs with minimal system and operational changes

TCP-AO is compatible with Master Key Tuple (MKT) configuration. TCP-AO also protects connections when using the same MKT across repeated instances of a connection. TCP-AO protects the connections by using traffic key that are derived from the MKT, and then coordinates changes between the endpoints.

**Note** TCP-AO and TCP MD5 are never permitted to be used simultaneously. TCP-AO supports IPv6, and is fully compatible with the proposed requirements for the replacement of TCP MD5.

### TCP Message Digest 5 (MD5) Authentication

Use the **password** {**clear** | **encrypted**} *LINE* command to enable TCP MD5 authentication for all PCEP peers. Any TCP segment coming from the PCC that does not contain a MAC matching the configured password will be rejected. Specify if the password is encrypted or clear text

```
Router(config-sr-te-pcc)# pce address ipv6 ipv6-PCE-address[password {clear | encrypted}
LINE]
```

### TCP Authentication Option (TCP-AO)

Use the **tcp-ao** *key-chain* [**include-tcp-options**] command to enable TCP Authentication Option (TCP-AO) authentication for all PCEP peers. Any TCP segment coming from the PCC that does not contain a MAC matching the configured key chain will be rejected. Use the **include-tcp-options** keyword to include other TCP options in the header for MAC calculation.

```
Router(config-sr-te-pcc)# pce address ipv6 ipv6-PCE-address tcp-ao key-chain
[include-tcp-options]
```

## Configure PCEP-Related Timers

Use the **timers keepalive** command to specify how often keepalive messages are sent from PCC to its peers. The range is from 0 to 255 seconds; the default value is 30.

```
Router(config-sr-te-pcc)# timers keepalive seconds
```

Use the **timers deadtimer** command to specify how long the remote peers wait before bringing down the PCEP session if no PCEP messages are received from this PCC. The range is from 1 to 255 seconds; the default value is 120.

```
Router(config-sr-te-pcc)# timers deadtimer seconds
```

Use the **timers delegation-timeout** command to specify how long a delegated SR policy can remain up without an active connection to a PCE. The range is from 0 to 3600 seconds; the default value is 60.

```
Router(config-sr-te-pcc)# timers delegation-timeout seconds
```

### PCE-Initiated SR Policy Timers

Use the **timers initiated orphans** command to specify the amount of time that a PCE-initiated SR policy will remain delegated to a PCE peer that is no longer reachable by the PCC. The range is from 10 to 180 seconds; the default value is 180.

```
Router(config-sr-te-pcc)# timers initiated orphans seconds
```

Use the **timers initiated state** command to specify the amount of time that a PCE-initiated SR policy will remain programmed while not being delegated to any PCE. The range is from 15 to 14440 seconds (24 hours); the default value is 600.

```
Router(config-sr-te-pcc)# timers initiated state seconds
```

To better understand how the PCE-initiated SR policy timers operate, consider the following example:

- PCE A instantiates SR policy P at head-end N.
- Head-end N delegates SR policy P to PCE A and programs it in forwarding.

- If head-end N detects that PCE A is no longer reachable, then head-end N starts the PCE-initiated **orphan** and **state** timers for SR policy P.
- If PCE A reconnects before the **orphan** timer expires, then SR policy P is automatically delegated back to its original PCE (PCE A).
- After the **orphan** timer expires, SR policy P will be eligible for delegation to any other surviving PCE(s).
- If SR policy P is not delegated to another PCE before the **state** timer expires, then head-end N will remove SR policy P from its forwarding.

### Enable SR-TE SYSLOG Alarms

Use the **logging policy status** command to enable SR-TE related SYSLOG alarms.

```
Router(config-sr-te)# logging policy status
```

### Enable PCEP Reports to SR-PCE

Use the **report-all** command to enable the PCC to report all SR policies in its database to the PCE.

```
Router(config-sr-te-pcc)# report-all
```

### Customize MSD Value at PCC

Use the **maximum-sid-depth** *value* command to customize the Maximum SID Depth (MSD) signaled by PCC during PCEP session establishment.

The MSD is expressed as a number uSIDs. The number of uSID is expressed as a number of carriers and the number of uSID per carrier.

The default MSD *value* is equal to the maximum MSD supported by the platform (12 — 2 carriers, 6 uSIDs per carrier).

```
Router(config-sr-te-srv6)# maximum-sid-depth value
```

For cases with path computation at PCE, a PCC can signal its MSD to the PCE in the following ways:

- During PCEP session establishment – The signaled MSD is treated as a node-wide property.
  - MSD is configured under **segment-routing traffic-eng maximum-sid-depth** *value* command
- During PCEP LSP path request – The signaled MSD is treated as an LSP property.
  - On-demand (ODN) SR Policy: MSD is configured using the **segment-routing traffic-eng on-demand color** *color* **maximum-sid-depth** *value* command
  - Local SR Policy: MSD is configured using the **segment-routing traffic-eng policy** *WORD* **candidate-paths preference** *preference* **dynamic metric sid-limit** *value* command.

**Note** If the configured MSD values are different, the per-LSP MSD takes precedence over the per-node MSD.

After path computation, the resulting uSID stack size is verified against the MSD requirement.

- If the uSID stack size is larger than the MSD and path computation is performed by PCE, then the PCE returns a "no path" response to the PCC.
- If the uSID stack size is larger than the MSD and path computation is performed by PCC, then the PCC will not install the path.

**Note** A sub-optimal path (if one exists) that satisfies the MSD constraint could be computed in the following cases:

- For a dynamic path with TE metric, when the PCE is configured with the **pce segment-routing te-latency** command or the PCC is configured with the **segment-routing traffic-eng te-latency** command.
- For a dynamic path with LATENCY metric
- For a dynamic path with affinity constraints

For example, if the PCC MSD is 4 and the optimal path (with an accumulated metric of 100) requires 5 uSIDs, but a sub-optimal path exists (with accumulated metric of 110) requiring 4 uSIDs, then the sub-optimal path is installed.

### Customize the SR-TE Path Calculation

Use the **te-latency** command to enable ECMP-aware path computation for TE metric.

```
Router(config-sr-te)# te-latency
```

**Note** ECMP-aware path computation is enabled by default for IGP and LATENCY metrics.

### Configure PCEP Redundancy Type

Use the **redundancy pcc-centric** command to enable PCC-centric high-availability model. The PCC-centric model changes the default PCC delegation behavior to the following:

- After LSP creation, LSP is automatically delegated to the PCE that computed it.
- If this PCE is disconnected, then the LSP is redelegated to another PCE.
- If the original PCE is reconnected, then the delegation fallback timer is started. When the timer expires, the LSP is redelegated back to the original PCE, even if it has worse preference than the current PCE.

```
Router(config-sr-te-pcc)# redundancy pcc-centric
```

### Configuring Head-End Router as PCEP PCC and Customizing SR-TE Related Options: Example

The following example shows how to configure an SR-TE head-end router with the following functionality:

- Enable the SR-TE head-end router as a PCEP client (PCC) with 2 PCEP servers (PCE) with different precedence values. The PCE with IP address cafe:0:2::2 is selected as BEST.
- Enable SR-TE related syslogs.

- Set the Maximum SID Depth (MSD) signaled during PCEP session establishment to 10.
- Enable PCEP reporting for all policies in the node.

```
Node1(config)# segment-routing
Node1(config-sr)# traffic-eng
Node1(config-sr-te)# pcc
Node1(config-sr-te-pcc)# source-address ipv6 cafe:0:1::1
Node1(config-sr-te-pcc)# pce address ipv6 cafe:0:2::2
Node1(config-pcc-pce)# precedence 10
Node1(config-pcc-pce)# exit
Node1(config-sr-te-pcc)# pce address ipv6 cafe:0:3::3
Node1(config-pcc-pce)# precedence 20
Node1(config-pcc-pce)# exit
Node1(config-sr-te-pcc)# report-all
Node1(config-sr-te-pcc)# exit
Node1(config-sr-te)# srv6
Node1(config-sr-te-srv6)# maximum-sid-depth 10
Node1(config-sr-te-srv6)# exit
Node1(config-sr-te)# logging
Node1(config-sr-te-log)# policy status
Node1(config-sr-te-log)# exit
Node1(config-sr-te)#
```

### Running Config

```
segment-routing
 traffic-eng
  srv6
   maximum-sid-depth 10
  !
  logging
   policy status
  !
  pcc
   source-address ipv6 cafe:0:1::1
   pce address ipv6 cafe:0:2::2
    precedence 10
   !
   pce address ipv6 cafe:0:3::3
    precedence 20
   !
   report-all
  !
 !
!
```

### Verification

```
Node1# show segment-routing traffic-eng pcc ipv6 peer brief

             Address   Precedence        State    Learned From
-------------------- ------------ ------------ ---------------
         cafe:0:2::2           10           up          config
         cafe:0:3::3           20           up          config


Node1# show segment-routing traffic-eng pcc ipv6 peer detail

PCC's peer database:
--------------------
```

```
Peer address: cafe:0:2::2
  Precedence: 10, (best PCE)
  State up
  Capabilities: Stateful, Update, Segment-Routing, Instantiation
  PCEP has been up for: 01:22:23
  Local keepalive timer is 30 seconds
  Remote keepalive timer is 30 seconds
  Local dead timer is 120 seconds
  Remote dead timer is 120 seconds
  Authentication: None
  Statistics:
    Open messages:      rx 1        |  tx 1
    Close messages:     rx 0        |  tx 0
    Keepalive messages: rx 164      |  tx 163
    Error messages:     rx 0        |  tx 0
    Report messages:    rx 0        |  tx 110
    Update messages:    rx 36       |  tx 0

Peer address: cafe:0:3::3
  Precedence: 20
  State up
  Capabilities: Stateful, Update, Segment-Routing, Instantiation
  PCEP has been up for: 01:21:48
  Local keepalive timer is 30 seconds
  Remote keepalive timer is 30 seconds
  Local dead timer is 120 seconds
  Remote dead timer is 120 seconds
  Authentication: None
  Statistics:
    Open messages:      rx 1        |  tx 1
    Close messages:     rx 0        |  tx 0
    Keepalive messages: rx 164      |  tx 162
    Error messages:     rx 0        |  tx 0
    Report messages:    rx 0        |  tx 82
    Update messages:    rx 0        |  tx 0
```

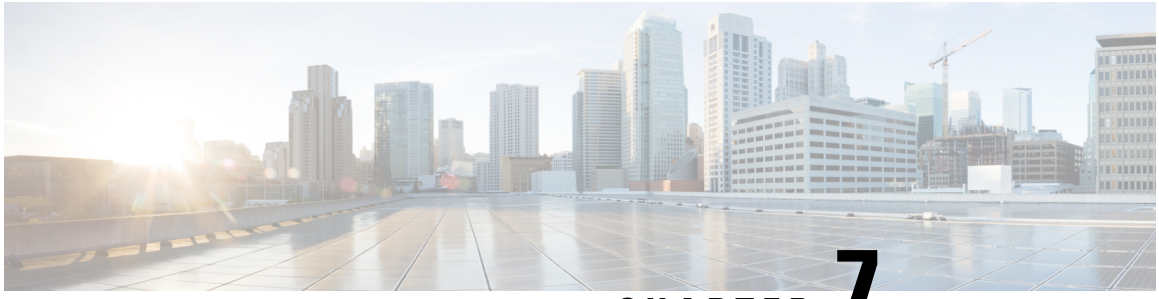

CHAPTER 7

# Configure Segment Routing Global Block and Segment Routing Local Block

Local label allocation is managed by the label switching database (LSD). The Segment Routing Global Block (SRGB) and Segment Routing Local Block (SRLB) are label values preserved for segment routing in the LSD.


- About the Segment Routing Global Block, on page 203
- About the Segment Routing Local Block, on page 205
- Understanding Segment Routing Label Allocation, on page 206
- Setup a Non-Default Segment Routing Global Block Range, on page 209
- Setup a Non-Default Segment Routing Local Block Range, on page 210


## About the Segment Routing Global Block

The Segment Routing Global Block (SRGB) is a range of labels reserved for Segment Routing global segments. A prefix-SID is advertised as a domain-wide unique index. The prefix-SID index points to a unique label within the SRGB range. The index is zero-based, meaning that the first index is 0. The MPLS label assigned to a prefix is derived from the Prefix-SID index plus the SRGB base. For example, considering an SRGB range of 16,000 to 23,999, a prefix 10.1.1.65/32 with prefix-SID index of **65** is assigned the label value of **16065**.

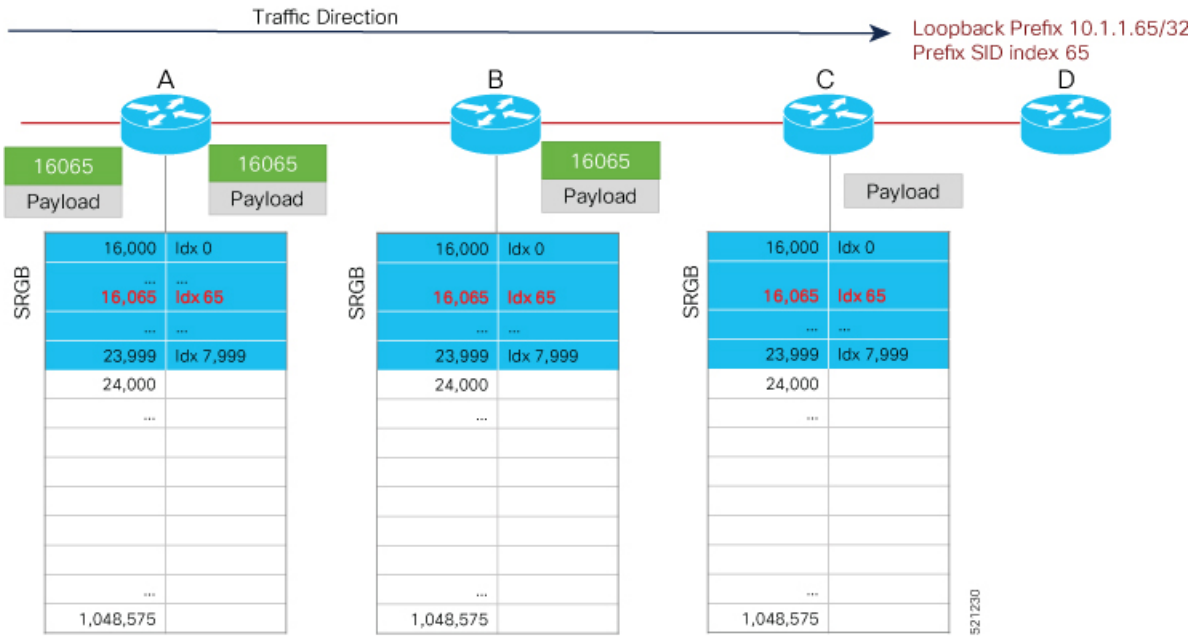


To keep the configuration simple and straightforward, we strongly recommended that you use a homogenous SRGB (meaning, the same SRGB range across all nodes). Using a heterogenous SRGB (meaning, a different SRGB range of the same size across nodes) is also supported but is not recommended.

### Behaviors and Limitations

- The default SRGB in IOS XR has a size of 8000 starting from label value 16000. The default range is 16000 to 23,999. With this size, and assuming one loopback prefix per router, an operator can assign prefix SIDs to a network with 8000 routers.
- There are instances when you might need to define a different SRGB range. For example:
  - Non-IOS XR nodes with a SRGB range that is different than the default IOS XR SRGB range.
  - The default SRGB range is not large enough to accommodate all required prefix SIDs.
- A non-default SRGB can be configured following these guidelines:
  - The SRGB starting value can be configured anywhere in the dynamic label range space (16,000 to 1,048,575).
  - In Cisco IOS XR release earlier than 6.6.3, the SRGB can have a maximum configurable size of 262,143.
  - In Cisco IOS XR release 6.6.3 and later, the SRGB can be configured to any size value that fits within the dynamic label range space.
- Allocating an SRGB label range does not mean that all the labels in this range are programmed in the forwarding table. The label range is just reserved for SR and not available for other purposes. Furthermore, a platform may limit the number of local labels that can be programmed.
- We recommend that the non-default SRGB be configured under the **segment-routing** global configuration mode. By default, all IGP instances and BGP use this SRGB.

- You can also configure a non-default SRGB under the IGP, but it is not recommended.

### SRGB Label Conflicts

When you define a non-default SRGB range, there might be a label conflict (for example, if labels are already allocated, statically or dynamically, in the new SRGB range). The following system log message indicates a label conflict:

```
%ROUTING-ISIS-4-SRGB_ALLOC_FAIL : SRGB allocation failed: 'SRGB reservation not
successful for [16000,80000], SRGB (16000 80000, SRGB_ALLOC_CONFIG_PENDING, 0x2)
(So far 16 attempts). Make sure label range is free'
```

To remove this conflict, you must reload the router to release the currently allocated labels and to allocate the new SRGB.

After the system reloads, LSD does not accept any dynamic label allocation before IS-IS/OSPF/BGP have registered with LSD. Upon IS-IS/OSPF/BGP registration, LSD allocates the requested SRGB (either the default range or the customized range).

After IS-IS/OSPF/BGP have registered and their SRGB is allocated, LSD starts serving dynamic label requests from other clients.

**Note** To avoid a potential router reload due to label conflicts, and assuming that the default SRGB size is large enough, we recommend that you use the default IOS XR SRGB range.

**Note** Allocating a non-default SRGB in the upper part of the MPLS label space increases the chance that the labels are available and a reload can be avoided.

**Caution** Modifying a SRGB configuration is disruptive for traffic and may require a reboot if the new SRGB is not available entirely.

# About the Segment Routing Local Block

A local segment is automatically assigned an MPLS label from the dynamic label range. In most cases, such as TI-LFA backup paths and SR-TE explicit paths defined with IP addresses, this dynamic label allocation is sufficient. However, in some scenarios, it could be beneficial to allocate manually local segment label values to maintain label persistency. For example, an SR-TE policy with a manual binding SID that is performing traffic steering based on incoming label traffic with the binding SID.

The Segment Routing Local Block (SRLB) is a range of label values preserved for the manual allocation of local segments, such as adjacency segment identifiers (adj-SIDs) , Layer 2 adj-SIDs, binding SIDs (BSIDs), and BGP peering SIDs. These labels are locally significant and are only valid on the nodes that allocate the labels.

### Behaviors and Limitations

- The default SRLB has a size of 1000 starting from label value 15000; therefore, the default SRLB range goes from 15000 to 15,999.
- A non-default SRLB can be configured following these guidelines:
  - The SRLB starting value can be configured anywhere in the dynamic label range space (16,000 to 1,048,575).
  - In Cisco IOS XR release earlier than 6.6.3, the SRLB can have a maximum configurable size of 262,143.
  - In Cisco IOS XR release 6.6.3 and later, the SRLB can be configured to any size value that fits within the dynamic label range space.

### SRLB Label Conflicts

When you define a non-default SRLB range, there might be a label conflict (for example, if labels are already allocated, statically or dynamically, in the new SRLB range). In this case, the new SRLB range will be accepted, but not applied (pending state). The previous SRLB range (active) will continue to be in use.

To remove this conflict, you must reload the router to release the currently allocated labels and to allocate the new SRLB.

**Caution** You can use the **clear segment-routing local-block discrepancy all** command to clear label conflicts. However, using this command is disruptive for traffic since it forces all other MPLS applications with conflicting labels to allocate new labels.

**Note** To avoid a potential router reload due to label conflicts, and assuming that the default SRGB size is large enough, we recommend that you use the default IOS XR SRLB range.

**Note** Allocating a non-default SRLB in the upper part of the MPLS label space increases the chance that the labels are available and a reload can be avoided.

# Understanding Segment Routing Label Allocation

In IOS XR, local label allocation is managed by the Label Switching Database (LSD). MPLS applications must register as a client with the LSD to allocate labels. Most MPLS applications (for example: LDP, RSVP, L2VPN, BGP [LU, VPN], IS-IS and OSPF [Adj-SID], SR-TE [Binding-SID]) use labels allocated dynamically by LSD.

With Segment Routing-capable IOS XR software releases, the LSD *preserves* the default SRLB label range (15,000 to 15,999) and default SRGB label range (16,000 to 23,999), even if Segment Routing is not enabled.

This preservation of the default SRLB/SRGB label range makes future Segment Routing activation possible without a reboot. No labels are allocated from this preserved range. When you enable Segment Routing with the default SRLB/SRGB in the future, these label ranges will be available and ready for use.

The LSD allocates dynamic labels starting from 24,000.

**Note** If an MPLS label range is configured and it overlaps with the default SRLB/SRGB label ranges (for example, **mpls label range 15000 1048575**), then the default SRLB/SRGB preservation is disabled.

#### Example 1: LSD Label Allocation When SR is not Configured

- Special use: 0-15
- MPLS static: 16 to 14,999
- SRLB (preserved): 15,000 to 15,999
- SRGB (preserved): 16,000 to 23,999
- Dynamic: 24,000 to max

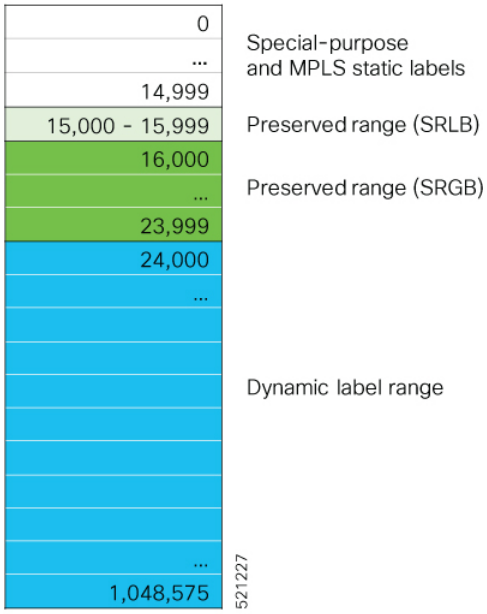


#### Example 2: LSD Label Allocation When SR is Configured with Default SRGB and Default SRLB

- Special use: 0-15
- MPLS static: 16 to 14,999
- SRLB (reserved): 15,000 to 15,999
- SRGB (reserved): 16,000 to 23,999
- Dynamic: 24,000 to max

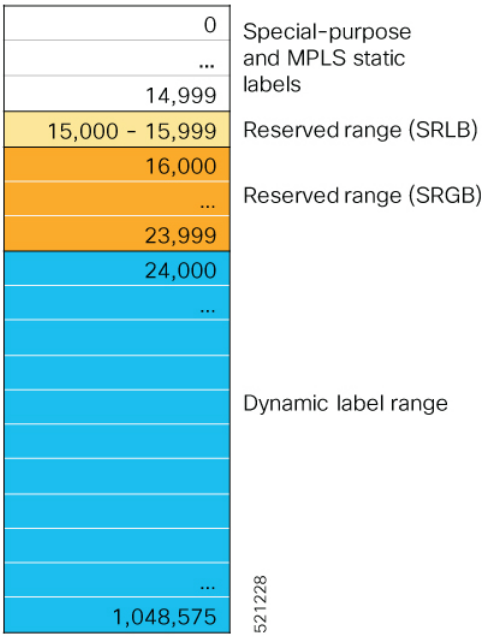


**Example 3: LSD Label Allocation When SR is Configured with Non-default SRGB and Non-default SRLB**

- Special use: 0-15
- MPLS static: 16 to 14,999
- SRLB (preserved): 15,000 to 15,999
- SRGB (preserved): 16,000 to 23,999
- Dynamic: 24000 to 28,999
- SRLB (reserved): 29,000 to 29,999
- SRGB (reserved): 30,000 to 39,999
- Dynamic: 40,000 to max

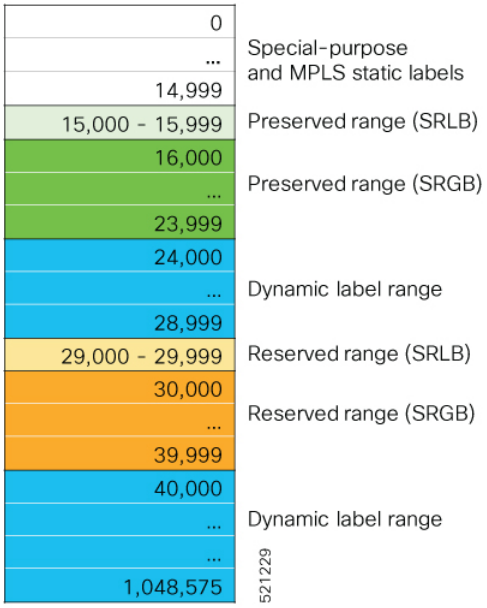


# Setup a Non-Default Segment Routing Global Block Range

This task explains how to configure a non-default SRGB range.

## SUMMARY STEPS

1. **configure**
2. **segment-routing global-block** *starting_value ending_value*
3. Use the **commit** or **end** command.

## DETAILED STEPS

| | Command or Action | Purpose |
|---|---|---|
| **Step 1** | **configure**<br>**Example:**<br>`RP/0/RSP0/CPU0:router# configure` | Enters global configuration mode. |
| **Step 2** | **segment-routing global-block** *starting_value ending_value*<br>**Example:**<br>`RP/0/RSP0/CPU0:router(config)# segment-routing global-block 16000 80000` | Enter the lowest value that you want the SRGB range to include as the starting value. Enter the highest value that you want the SRGB range to include as the ending value. |
| **Step 3** | Use the **commit** or **end** command. | **commit** —Saves the configuration changes and remains within the configuration session.<br>**end** —Prompts user to take one of these actions: |

| | Command or Action | Purpose |
|---|---|---|
| | | • **Yes** — Saves configuration changes and exits the configuration session.<br>• **No** —Exits the configuration session without committing the configuration changes.<br>• **Cancel** —Remains in the configuration session, without committing the configuration changes. |

Use the **show mpls label table** [**label** *label-value*] command to verify the SRGB configuration:

```
Router# show mpls label table label 16000 detail
Table Label   Owner                           State  Rewrite
----- ------- ------------------------------- ------ -------
0     16000   ISIS(A):1                       InUse  No
  (Lbl-blk SRGB, vers:0, (start_label=16000, size=64001)
```

### What to do next

Configure prefix SIDs and enable segment routing.

# Setup a Non-Default Segment Routing Local Block Range

This task explains how to configure a non-default SRLB range.

### SUMMARY STEPS

1. **configure**
2. **segment-routing local-block** *starting_value ending_value*
3. Use the **commit** or **end** command.

### DETAILED STEPS

| | Command or Action | Purpose |
|---|---|---|
| **Step 1** | **configure**<br>**Example:**<br>`RP/0/RSP0/CPU0:router# configure` | Enters global configuration mode. |
| **Step 2** | **segment-routing local-block** *starting_value ending_value*<br>**Example:**<br>`RP/0/RSP0/CPU0:router(config)# segment-routing local-block 30000 30999` | Enter the lowest value that you want the SRLB range to include as the starting value. Enter the highest value that you want the SRLB range to include as the ending value. |

| | Command or Action | Purpose |
|---|---|---|
| **Step 3** | Use the **commit** or **end** command. | **commit** —Saves the configuration changes and remains within the configuration session.<br>**end** —Prompts user to take one of these actions:<br>• **Yes** — Saves configuration changes and exits the configuration session.<br>• **No** —Exits the configuration session without committing the configuration changes.<br>• **Cancel** —Remains in the configuration session, without committing the configuration changes. |

Use the **show mpls label table** [**label** *label-value*] [**detail**] command to verify the SRLB configuration:

```
Router# show mpls label table label 30000 detail

Table Label   Owner                           State  Rewrite
----- ------- ------------------------------- ------ -------
0     30000   LSD(A)                          InUse  No
  (Lbl-blk SRLB, vers:0, (start_label=30000, size=1000, app_notify=0)

Router# show segment-routing local-block inconsistencies

No inconsistencies
```

The following example shows an SRLB label conflict in the range of 30000 and 30999. Note that the default SRLB is active and the configured SRLB is pending:

```
Router(config)# segment-routing local-block 30000 30999

%ROUTING-MPLS_LSD-3-ERR_SRLB_RANGE : SRLB allocation failed: 'SRLB reservation not successfull

for [30000,30999]. Use with caution 'clear segment-routing local-block discrepancy all'
command
to force srlb allocation'
```

**Caution** You can use the **clear segment-routing local-block discrepancy all** command to clear label conflicts. However, using this command is disruptive for traffic since it forces all other MPLS applications with conflicting labels to allocate new labels.

```
Router# show mpls label table label 30000 detail

Table Label   Owner                           State  Rewrite
----- ------- ------------------------------- ------ -------
0     30000   LSD(A)                          InUse  No
  (Lbl-blk SRLB, vers:0, (start_label=30000, size=1000, app_notify=0)

Router# show segment-routing local-block inconsistencies
SRLB inconsistencies range: Start/End: 30000/30999
```

```
Router# show mpls lsd private | i SRLB

SRLB Lbl Mgr:
   Current Active SRLB block      = [15000, 15999]
   Configured Pending SRLB block  = [30000, 30999]
```

Reload the router to release the currently allocated labels and to allocate the new SRLB:

```
Router# reload

Proceed with reload? [confirm]yes
```

After the system is brought back up, verify that there are no label conflicts with the SRLB configuration:

```
Router# show mpls lsd private | i SRLB

SRLB Lbl Mgr:
   Current Active SRLB block      = [30000, 30999]
   Configured Pending SRLB block  = [0, 0]

Router# show segment-routing local-block inconsistencies

No inconsistencies
```

### What to do next

Configure adjacency SIDs and enable segment routing.

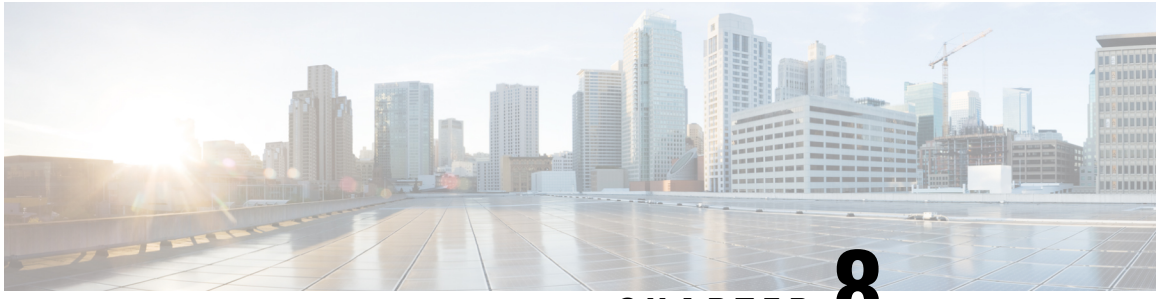

CHAPTER 8

# Configure Segment Routing for IS-IS Protocol

Integrated Intermediate System-to-Intermediate System (IS-IS), Internet Protocol Version 4 (IPv4), is a standards-based Interior Gateway Protocol (IGP). The Cisco IOS XR software implements the IP routing capabilities described in International Organization for Standardization (ISO)/International Engineering Consortium (IEC) 10589 and RFC 1995, and adds the standard extensions for single topology and multitopology IS-IS for IP Version 6 (IPv6).

This module provides the configuration information used to enable segment routing for IS-IS.

**Note** For additional information on implementing IS-IS on your Cisco ASR 9000 Series Router, see the *Implementing IS-IS* module in the *Cisco ASR 9000 Series Aggregation Services Router Routing Configuration Guide*.


- Enabling Segment Routing for IS-IS Protocol, on page 213
- Configuring a Prefix-SID on the IS-IS Enabled Loopback Interface, on page 216
- Configuring an Adjacency SID, on page 218
- Configuring Bandwidth-Based Local UCMP, on page 225
- IS-IS Prefix Attributes for Extended IPv4 and IPv6 Reachability, on page 226
- IS-IS Multi-Domain Prefix SID and Domain Stitching: Example, on page 230
- IS-IS Unreachable Prefix Announcement, on page 233
- Conditional Prefix Advertisement, on page 235


## Enabling Segment Routing for IS-IS Protocol

Segment routing on the IS-IS control plane supports the following:

- IPv4 and IPv6 control plane
- Level 1, level 2, and multi-level routing
- Prefix SIDs for host prefixes on loopback interfaces
- Multiple IS-IS instances on the same loopback interface for domain border nodes
- Adjacency SIDs for adjacencies
- MPLS penultimate hop popping (PHP) and explicit-null signaling

This task explains how to enable segment routing for IS-IS.

### Before you begin

Your network must support the MPLS Cisco IOS XR software feature before you enable segment routing for IS-IS on your router.

**Note** You must enter the commands in the following task list on every IS-IS router in the traffic-engineered portion of your network.

## SUMMARY STEPS

1. **configure**
2. **router isis** *instance-id*
3. **address-family** { **ipv4** | **ipv6** } [ **unicast** ]
4. **metric-style wide** [ **level** { **1** | **2** }]
5. **router-id loopback** *loopback interface used for prefix-sid*
6. **segment-routing mpls** [**sr-prefer**]
7. **exit**
8. Use the **commit** or **end** command.

## DETAILED STEPS

| | Command or Action | Purpose |
|---|---|---|
| **Step 1** | **configure**<br>**Example:**<br>`RP/0/RSP0/CPU0:router# configure` | Enters global configuration mode. |
| **Step 2** | **router isis** *instance-id*<br>**Example:**<br>`RP/0/RSP0/CPU0:router(config)# router isis isp` | Enables IS-IS routing for the specified routing instance, and places the router in router configuration mode.<br>**Note** You can change the level of routing to be performed by a particular routing instance by using the **is-type** router configuration command. |
| **Step 3** | **address-family** { **ipv4** | **ipv6** } [ **unicast** ]<br>**Example:**<br>`RP/0/RSP0/CPU0:router(config-isis)# address-family ipv4 unicast` | Specifies the IPv4 or IPv6 address family, and enters router address family configuration mode. |
| **Step 4** | **metric-style wide** [ **level** { **1** | **2** }]<br>**Example:**<br>`RP/0/RSP0/CPU0:router(config-isis-af)# metric-style wide level 1` | Configures a router to generate and accept only wide link metrics in the Level 1 area. |

| | Command or Action | Purpose |
|---|---|---|
| **Step 5** | **router-id loopback** *loopback interface used for prefix-sid*<br>**Example:**<br>`RP/0/RSP0/CPU0:router(config-isis-af)# router-id loopback0` | Configures router ID for each address-family (IPv4/IPv6).<br>IS-IS advertises the router ID in TLVs 134 (for IPv4 address family) and 140 (for IPv6 address family). Required when traffic engineering is used. |
| **Step 6** | **segment-routing mpls** [**sr-prefer**]<br>**Example:**<br>`RP/0/RSP0/CPU0:router(config-isis-af)# segment-routing mpls` | Segment routing is enabled by the following actions:<br>• MPLS forwarding is enabled on all interfaces where IS-IS is active.<br>• All known prefix-SIDs in the forwarding plain are programmed, with the prefix-SIDs advertised by remote routers or learned through local or remote mapping server.<br>• The prefix-SIDs locally configured are advertised.<br>Use the **sr-prefer** keyword to set the preference of segment routing (SR) labels over label distribution protocol (LDP) labels. |
| **Step 7** | **exit**<br>**Example:**<br>`RP/0/RSP0/CPU0:router(config-isis-af)# exit`<br>`RP/0/RSP0/CPU0:router(config-isis)# exit` | |
| **Step 8** | Use the **commit** or **end** command. | **commit** —Saves the configuration changes and remains within the configuration session.<br>**end** —Prompts user to take one of these actions:<br>• **Yes** — Saves configuration changes and exits the configuration session.<br>• **No** —Exits the configuration session without committing the configuration changes.<br>• **Cancel** —Remains in the configuration session, without committing the configuration changes. |

### What to do next

Configure the prefix SID.

# Configuring a Prefix-SID on the IS-IS Enabled Loopback Interface

A prefix segment identifier (SID) is associated with an IP prefix. The prefix SID is manually configured from the segment routing global block (SRGB) range of labels. A prefix SID is configured under the loopback interface with the loopback address of the node as the prefix. The prefix segment steers the traffic along the shortest path to its destination.

A prefix SID can be a node SID or an Anycast SID. A node SID is a type of prefix SID that identifies a specific node. An Anycast SID is a type of prefix SID that identifies a set of nodes, and is configured with n-flag clear. The set of nodes (Anycast group) is configured to advertise a shared prefix address and prefix SID. Anycast routing enables the steering of traffic toward multiple advertising nodes. Packets addressed to an Anycast address are forwarded to the topologically nearest nodes.

Strict-SPF SIDs are used to forward traffic strictly along the SPF path. Strict-SPF SIDs are not forwarded to SR-TE policies. IS-IS advertises the SR Algorithm sub Type Length Value (TLV) (in the SR Router Capability SubTLV) to include both algorithm 0 (SPF) and algorithm 1 (Strict-SPF). When the IS-IS area or level is Strict-SPF TE-capable, Strict-SPF SIDs are used to build the SR-TE Strict-SPF policies. Strict-SPF SIDs are also used to program the backup paths for prefixes, node SIDs, and adjacency SIDs.

**Note** The same SRGB is used for both regular SIDs and strict-SPF SIDs.

The prefix SID is globally unique within the segment routing domain.

This task explains how to configure prefix segment identifier (SID) index or absolute value on the IS-IS enabled Loopback interface.

### Before you begin

Ensure that segment routing is enabled on the corresponding address family.

## SUMMARY STEPS

1. **configure**
2. **router isis** *instance-id*
3. **interface Loopback** *instance*
4. **address-family** { **ipv4** | **ipv6** } [ **unicast** ]
5. **prefix-sid** [**strict-spf** | **algorithm** *algorithm-number*] {**index** *SID-index* | **absolute** *SID-value*} [**n-flag-clear**] [**explicit-null** ]
6. Use the **commit** or **end** command.

## DETAILED STEPS

| | Command or Action | Purpose |
|---|---|---|
| **Step 1** | **configure**<br>**Example:** | Enters global configuration mode. |

| | Command or Action | Purpose |
|---|---|---|
| | `RP/0/RSP0/CPU0:router# configure` | |
| **Step 2** | **router isis** *instance-id*<br>**Example:**<br>`RP/0/RSP0/CPU0:router(config)# router isis 1` | Enables IS-IS routing for the specified routing instance, and places the router in router configuration mode.<br>• You can change the level of routing to be performed by a particular routing instance by using the **is-type** router configuration command. |
| **Step 3** | **interface Loopback** *instance*<br>**Example:**<br>`RP/0/RSP0/CPU0:router(config-isis)# interface Loopback0` | Specifies the loopback interface and instance. |
| **Step 4** | **address-family** { **ipv4** \| **ipv6** } [ **unicast** ]<br>**Example:**<br>The following is an example for ipv4 address family:<br>`RP/0/RSP0/CPU0:router(config-isis-if)# address-family ipv4 unicast` | Specifies the IPv4 or IPv6 address family, and enters router address family configuration mode. |
| **Step 5** | **prefix-sid** [**strict-spf** \| **algorithm** *algorithm-number*] {**index** *SID-index* \| **absolute** *SID-value*} [**n-flag-clear**] [**explicit-null** ]<br>**Example:**<br>`RP/0/RSP0/CPU0:router(config-isis-if-af)# prefix-sid index 1001`<br>`RP/0/RSP0/CPU0:router(config-isis-if-af)# prefix-sid strict-spf index 101`<br>`RP/0/RSP0/CPU0:router(config-isis-if-af)# prefix-sid absolute 17001` | Configures the prefix-SID index or absolute value for the interface.<br>Specify **strict-spf** to configure the prefix-SID to use the SPF path instead of the SR-TE policy.<br>Specify **algorithm** *algorithm-number* to configure SR Flexible Algorithm.<br>Specify **index** *SID-index* for each node to create a prefix SID based on the lower boundary of the SRGB + the index.<br>Specify **absolute** *SID-value* for each node to create a specific prefix SID within the SRGB.<br>By default, the n-flag is set on the prefix-SID, indicating that it is a node SID. For specific prefix-SID (for example, Anycast prefix-SID), enter the `n-flag-clear` keyword. IS-IS does not set the `N` flag in the prefix-SID sub Type Length Value (TLV).<br>To disable penultimate-hop-popping (PHP) and add explicit-Null label, enter `explicit-null` keyword. IS-IS sets the `E` flag in the prefix-SID sub TLV.<br>**Note** IS-IS does not advertise separate explicit-NULL or flags for regular SIDs and strict-SPF SIDs. The settings in the regular SID are used if the settings are different. |

| | Command or Action | Purpose |
|---|---|---|
| **Step 6** | Use the **commit** or **end** command. | **commit** —Saves the configuration changes and remains within the configuration session.<br>**end** —Prompts user to take one of these actions:<br>• **Yes** — Saves configuration changes and exits the configuration session.<br>• **No** —Exits the configuration session without committing the configuration changes.<br>• **Cancel** —Remains in the configuration session, without committing the configuration changes. |

Verify the prefix-SID configuration:

```
RP/0/RSP0/CPU0:router# show isis database verbose

IS-IS 1 (Level-2) Link State Database
LSPID                 LSP Seq Num  LSP Checksum  LSP Holdtime  ATT/P/OL
router.00-00        * 0x0000039b   0xfc27        1079            0/0/0
  Area Address: 49.0001
  NLPID:        0xcc
  NLPID:        0x8e
  MT:           Standard (IPv4 Unicast)
  MT:           IPv6 Unicast                                    0/0/0
  Hostname:     router
  IP Address:   10.0.0.1
  IPv6 Address: 2001:0db8:1234::0a00:0001
  Router Cap:   10.0.0.1, D:0, S:0
    Segment Routing: I:1 V:1, SRGB Base: 16000 Range: 8000
    SR Algorithm:
      Algorithm: 0
      Algorithm: 1
<...>
  Metric: 0          IP-Extended 10.0.0.1/32
    Prefix-SID Index: 1001, Algorithm:0, R:0 N:1 P:0 E:0 V:0 L:0
    Prefix-SID Index: 101, Algorithm:1, R:0 N:1 P:0 E:0 V:0 L:0
<...>
```

# Configuring an Adjacency SID

An adjacency SID (Adj-SID) is associated with an adjacency to a neighboring node. The adjacency SID steers the traffic to a specific adjacency. Adjacency SIDs have local significance and are only valid on the node that allocates them.

An adjacency SID can be allocated dynamically from the dynamic label range or configured manually from the segment routing local block (SRLB) range of labels.

Adjacency SIDs that are dynamically allocated do not require any special configuration, however there are some limitations:

- A dynamically allocated Adj-SID value is not known until it has been allocated, and a controller will not know the Adj-SID value until the information is flooded by the IGP.
- Dynamically allocated Adj-SIDs are not persistent and can be reallocated after a reload or a process restart.
- Each link is allocated a unique Adj-SID, so the same Adj-SID cannot be shared by multiple links.

Manually allocated Adj-SIDs are persistent over reloads and restarts. They can be provisioned for multiple adjacencies to the same neighbor or to different neighbors. You can specify that the Adj-SID is protected. If the Adj-SID is protected on the primary interface and a backup path is available, a backup path is installed. By default, manual Adj-SIDs are not protected.

Adjacency SIDs are advertised using the existing IS-IS Adj-SID sub-TLV. The S and P flags are defined for manually allocated Adj-SIDs.

```
 0 1 2 3 4 5 6 7
+-+-+-+-+-+-+-+-+
|F|B|V|L|S|P|   |
+-+-+-+-+-+-+-+-+
```

*Table 24: Adjacency Segment Identifier (Adj-SID) Flags Sub-TLV Fields*

| Field | Description |
|---|---|
| S (Set) | This flag is set if the same Adj-SID value has been provisioned on multiple interfaces. |
| P (Persistent) | This flag is set if the Adj-SID is persistent (manually allocated). |

Manually allocated Adj-SIDs are supported on point-to-point (P2P) interfaces.

This task explains how to configure an Adj-SID on an interface.

### Before you begin

Ensure that segment routing is enabled on the corresponding address family.

Use the **show mpls label table detail** command to verify the SRLB range.

## SUMMARY STEPS

1. **configure**
2. **router isis** *instance-id*
3. **interface** *type interface-path-id*
4. **point-to-point**
5. **address-family** { **ipv4** | **ipv6** } [ **unicast** ]
6. **adjacency-sid** {**index** *adj-SID-index* | **absolute** *adj-SID-value* } [**protected** ]
7. Use the **commit** or **end** command.

## DETAILED STEPS

| | Command or Action | Purpose |
|---|---|---|
| **Step 1** | **configure**<br>**Example:**<br>`RP/0/RSP0/CPU0:router# configure` | Enters global configuration mode. |
| **Step 2** | **router isis** *instance-id*<br>**Example:**<br>`RP/0/RSP0/CPU0:router(config)# router isis 1` | Enables IS-IS routing for the specified routing instance, and places the router in router configuration mode.<br>• You can change the level of routing to be performed by a particular routing instance by using the **is-type** router configuration command. |
| **Step 3** | **interface** *type interface-path-id*<br>**Example:**<br>`RP/0/RSP0/CPU0:router(config-isis)# interface GigabitEthernet0/0/0/7` | Specifies the interface and enters interface configuration mode. |
| **Step 4** | **point-to-point**<br>**Example:**<br>`RP/0/RSP0/CPU0:router(config-isis-if)# point-to-point` | Specifies the interface is a point-to-point interface. |
| **Step 5** | **address-family** { **ipv4** \| **ipv6** } [ **unicast** ]<br>**Example:**<br>The following is an example for ipv4 address family:<br>`RP/0/RSP0/CPU0:router(config-isis-if)# address-family ipv4 unicast` | Specifies the IPv4 or IPv6 address family, and enters router address family configuration mode. |
| **Step 6** | **adjacency-sid** {**index** *adj-SID-index* \| **absolute** *adj-SID-value* } [**protected** ]<br>**Example:**<br>`RP/0/RSP0/CPU0:router(config-isis-if-af)# adjacency-sid index 10`<br>`RP/0/RSP0/CPU0:router(config-isis-if-af)# adjacency-sid absolute 15010` | Configures the Adj-SID index or absolute value for the interface.<br>Specify **index** *adj-SID-index* for each link to create an Ajd-SID based on the lower boundary of the SRLB + the index.<br>Specify **absolute** *adj-SID-value* for each link to create a specific Ajd-SID within the SRLB.<br>Specify if the Adj-SID is **protected**. For each primary path, if the Adj-SID is protected on the primary interface and a backup path is available, a backup path is installed. By default, manual Adj-SIDs are not protected. |
| **Step 7** | Use the **commit** or **end** command. | **commit** —Saves the configuration changes and remains within the configuration session. |

| | Command or Action | Purpose |
|---|---|---|
| | | **end** —Prompts user to take one of these actions:<br>• **Yes** — Saves configuration changes and exits the configuration session.<br>• **No** —Exits the configuration session without committing the configuration changes.<br>• **Cancel** —Remains in the configuration session, without committing the configuration changes. |

Verify the Adj-SID configuration:

```
RP/0/RSP0/CPU0:router# show isis segment-routing label adjacency persistent
Mon Jun 12 02:44:07.085 PDT

IS-IS 1 Manual Adjacency SID Table

15010 AF IPv4
      GigabitEthernet0/0/0/3: IPv4, Protected 1/65/N, Active
      GigabitEthernet0/0/0/7: IPv4, Protected 2/66/N, Active

15100 AF IPv6
      GigabitEthernet0/0/0/3: IPv6, Not protected 255/255/N, Active
```

Verify the labels are added to the MPLS Forwarding Information Base (LFIB):

```
RP/0/RSP0/CPU0:router# show mpls forwarding labels 15010
Mon Jun 12 02:50:12.172 PDT
Local  Outgoing    Prefix             Outgoing     Next Hop        Bytes
Label  Label       or ID              Interface                    Switched
------ ----------- ------------------ ------------ --------------- ------------
15010  Pop         SRLB (idx 10)      Gi0/0/0/3    10.0.3.3        0
       Pop         SRLB (idx 10)      Gi0/0/0/7    10.1.0.5        0
       16004       SRLB (idx 10)      Gi0/0/0/7    10.1.0.5        0            (!)
       16004       SRLB (idx 10)      Gi0/0/0/3    10.0.3.3        0            (!)
```

# Protected Adjacency SID Backup Timer

IS-IS advertises a protected adjacency SID for an adjacency when a backup path is available. Primary and backup paths are programmed into the label switching database (LSD) as rewrites.

When an adjacency goes down, IS-IS stops advertising the protected adjacency SID immediately, and the backup path is promoted and installed as LSD rewrite. After a specified amount of time, the LSD rewrite is deleted. If the installed path fails again, the protection ends there and traffic through the original protected adjacency SID is permanently lost.

The Protected Adjacency SID Backup Timer provides a configurable maintenance time period. During this time period, IS-IS updates the LSD rewrite with primary and backup (if available) paths to the neighbor upon topology changes.

### Configuration

Use the **segment-routing protected-adjacency-sid-delay** command in IS-IS address family configuration mode. The range is from 30 to 3600 seconds; the default is 900 seconds (15 min).

```
Router(config)# router isis 1
Router(config-isis)# address-family ipv4 unicast
Router(config-isis-af)# segment-routing protected-adjacency-sid-delay 360
```

### Running Configuration

```
router isis 1
 address-family ipv4 unicast
  segment-routing protected-adjacency-sid-delay 360
 !
 interface GigabitEthernet0/0/0/7
  point-to-point
  address-family ipv4 unicast
   fast-reroute per-prefix
   fast-reroute per-prefix ti-lfa
  !
 !
!
```

# Manually Configure a Layer 2 Adjacency SID

Typically, an adjacency SID (Adj-SID) is associated with a Layer 3 adjacency to a neighboring node, to steer the traffic to a specific adjacency. If you have Layer 3 bundle interfaces, where multiple physical interfaces form a bundle interface, the individual Layer 2 bundle members are not visible to IGP; only the bundle interface is visible.

You can configure a Layer 2 Adj-SID for the individual Layer 2 bundle interfaces. This configuration allows you to track the availability of individual bundle member links and to verify the segment routing forwarding over the individual bundle member links, for Operational Administration and Maintenance (OAM) purposes.

A Layer 2 Adj-SID can be allocated dynamically or configured manually.

- IGP dynamically allocates Layer 2 Adj-SIDs from the dynamic label range for each Layer 2 bundle member. A dynamic Layer 2 Adj-SID is not persistent and can be reallocated as the Layer 3 bundle link goes up and down.
- Manually configured Layer 2 Adj-SIDs are persistent if the Layer 3 bundle link goes up and down. Layer 2 Adj-SIDs are allocated from the Segment Routing Local Block (SRLB) range of labels. However, if the configured value of Layer 2 Adj-SID does not fall within the available SRLB, a Layer 2 Adj-SID will not be programmed into forwarding information base (FIB).

### Restrictions

- Adj-SID forwarding requires a next-hop, which can be either an IPv4 address or an IPv6 address, but not both. Therefore, manually configured Layer 2 Adj-SIDs are configured per address-family.
- Manually configured Layer 2 Adj-SID can be associated with only one Layer 2 bundle member link.
- A SID value used for Layer 2 Adj-SID cannot be shared with Layer 3 Adj-SID.
- SR-TE using Layer 2 Adj-SID is not supported.

This task explains how to configure a Layer 2 Adj-SID on an interface.

### Before you begin

Ensure that segment routing is enabled on the corresponding address family.

Use the **show mpls label table detail** command to verify the SRLB range.

## SUMMARY STEPS

1. **configure**
2. **segment-routing**
3. **adjacency-sid**
4. **interface** *type interface-path-id*
5. **address-family** { **ipv4** | **ipv6** } [ **unicast** ]
6. **l2-adjacency sid** {**index** *adj-SID-index* | **absolute** *adj-SID-value* } [**next-hop** { *ipv4_address* | *ipv6_address* } ]
7. Use the **commit** or **end** command.
8. **end**
9. **router isis** *instance-id*
10. **address-family** { **ipv4** | **ipv6** } [ **unicast** ]
11. **segment-routing bundle-member-adj-sid**

## DETAILED STEPS

| | Command or Action | Purpose |
|---|---|---|
| **Step 1** | **configure**<br>**Example:**<br>`RP/0/RSP0/CPU0:router# configure` | Enters global configuration mode. |
| **Step 2** | **segment-routing**<br>**Example:**<br>`Router(config)# segment-routing` | Enters segment routing configuration mode. |
| **Step 3** | **adjacency-sid**<br>**Example:**<br>`Router(config-sr)# adjacency-sid` | Enters adjacency SID configuration mode. |
| **Step 4** | **interface** *type interface-path-id*<br>**Example:**<br>`Router(config-sr-adj)# interface GigabitEthernet0/0/0/3` | Specifies the interface and enters interface configuration mode. |
| **Step 5** | **address-family** { **ipv4** \| **ipv6** } [ **unicast** ]<br>**Example:**<br>`Router(config-sr-adj-intf)# address-family ipv4 unicast` | Specifies the IPv4 or IPv6 address family, and enters router address family configuration mode. |

| | Command or Action | Purpose |
|---|---|---|
| **Step 6** | **l2-adjacency sid** {**index** *adj-SID-index* \| **absolute** *adj-SID-value* } [**next-hop** { *ipv4_address* \| *ipv6_address* } ]<br>**Example:**<br>`Router(config-sr-adj-intf-af)# l2-adjacency sid absolute 15015 next-hop 10.1.1.4` | Configures the Adj-SID index or absolute value for the interface.<br>Specify **index** *adj-SID-index* for each link to create an Ajd-SID based on the lower boundary of the SRLB + the index.<br>Specify **absolute** *adj-SID-value* for each link to create a specific Ajd-SID within the SRLB.<br>For point-to-point interfaces, you are not required to specify a next-hop. However, if you do specify the next-hop, the Layer 2 Adj-SID will be used only if the specified next-hop matches the neighbor address.<br>For LAN interfaces, you must configure the next-hop IPv4 or IPv6 address. If you do not configure the next-hop, the Layer 2 Adj-SID will not be used for LAN interface. |
| **Step 7** | Use the **commit** or **end** command. | **commit** —Saves the configuration changes and remains within the configuration session.<br>**end** —Prompts user to take one of these actions:<br>• **Yes** — Saves configuration changes and exits the configuration session.<br>• **No** —Exits the configuration session without committing the configuration changes.<br>• **Cancel** —Remains in the configuration session, without committing the configuration changes. |
| **Step 8** | **end** | |
| **Step 9** | **router isis** *instance-id*<br>**Example:**<br>`Router(config)# router isis isp` | Enables IS-IS routing for the specified routing instance, and places the router in router configuration mode. |
| **Step 10** | **address-family** { **ipv4** \| **ipv6** } [ **unicast** ]<br>**Example:**<br>`Router(config-isis)# address-family ipv4 unicast` | Specifies the IPv4 or IPv6 address family, and enters router address family configuration mode. |
| **Step 11** | **segment-routing bundle-member-adj-sid**<br>**Example:** | Programs the dynamic Layer 2 Adj-SIDs, and advertises both manual and dynamic Layer 2 Adj-SIDs. |

| | Command or Action | Purpose |
|---|---|---|
| | `Router(config-isis-af)# segment-routing bundle-member-adj-sid` | **Note** This command is not required to program manual L2 Adj-SID, but is required to program the dynamic Layer 2 Adj-SIDs and to advertise both manual and dynamic Layer 2 Adj-SIDs. |

Verify the configuration:

```
Router# show mpls forwarding detail | i "Pop|Outgoing Interface|Physical Interface"
Tue Jun 20 06:53:51.876 PDT
. . .
15001  Pop         SRLB (idx 1)       BE1          10.1.1.4        0
     Outgoing Interface: Bundle-Ether1 (ifhandle 0x000000b0)
     Physical Interface: GigabitEthernet0/0/0/3 (ifhandle 0x000000b0)


Router# show running-config segment-routing
Tue Jun 20 07:14:25.815 PDT
segment-routing
 adjacency-sid
  interface GigabitEthernet0/0/0/3
   address-family ipv4 unicast
    l2-adjacency-sid absolute 15015 next-hop 10.1.1.4
   !
  !
 !
!
```

# Configuring Bandwidth-Based Local UCMP

Bandwidth-based local Unequal Cost Multipath (UCMP) allows you to enable UCMP functionality locally between Equal Cost Multipath (ECMP) paths based on the bandwidth of the local links.

Bandwidth-based local UCMP is performed for prefixes, segment routing Adjacency SIDs, and Segment Routing label cross-connects installed by IS-IS, and is supported on any physical or virtual interface that has a valid bandwidth.

For example, if the capacity of a bundle interface changes due to the link or line card up/down event, traffic continues to use the affected bundle interface regardless of the available provisioned bundle members. If some bundle members were not available due to the failure, this behavior could cause the traffic to overload the bundle interface. To address the bundle capacity changes, bandwidth-based local UCMP uses the bandwidth of the local links to load balance traffic when bundle capacity changes.

### Before you begin

## SUMMARY STEPS

1. **configure**
2. **router isis** *instance-id*
3. **address-family** { **ipv4** | **ipv6** } [ **unicast** ]
4. **apply-weight ecmp-only bandwidth**
5. Use the **commit** or **end** command.

**DETAILED STEPS**

| | Command or Action | Purpose |
|---|---|---|
| **Step 1** | **configure**<br>**Example:**<br>`RP/0/RSP0/CPU0:router# configure` | Enters global configuration mode. |
| **Step 2** | **router isis** *instance-id*<br>**Example:**<br>`RP/0/RSP0/CPU0:router(config)# router isis 1` | Enables IS-IS routing for the specified routing instance, and places the router in router configuration mode.<br>You can change the level of routing to be performed by a particular routing instance by using the **is-type** router configuration command. |
| **Step 3** | **address-family** { **ipv4** \| **ipv6** } [ **unicast** ]<br>**Example:**<br>The following is an example for ipv4 address family:<br>`RP/0/RSP0/CPU0:router(config-isis)# address-family ipv4 unicast` | Specifies the IPv4 or IPv6 address family, and enters IS-IS address family configuration mode. |
| **Step 4** | **apply-weight ecmp-only bandwidth**<br>**Example:**<br>`RP/0/RSP0/CPU0:router(config-isis-af)# apply-weight ecmp-only bandwidth` | Enables UCMP functionality locally between ECMP paths based on the bandwidth of the local links. |
| **Step 5** | Use the **commit** or **end** command. | **commit** —Saves the configuration changes and remains within the configuration session.<br>**end** —Prompts user to take one of these actions:<br>• **Yes** — Saves configuration changes and exits the configuration session.<br>• **No** —Exits the configuration session without committing the configuration changes.<br>• **Cancel** —Remains in the configuration session, without committing the configuration changes. |

# IS-IS Prefix Attributes for Extended IPv4 and IPv6 Reachability

The following sub-TLVs support the advertisement of IPv4 and IPv6 prefix attribute flags and the source router ID of the router that originated a prefix advertisement, as described in RFC 7794.

- Prefix Attribute Flags
- IPv4 and IPv6 Source Router ID

# Prefix Attribute Flags

The Prefix Attribute Flag sub-TLV supports the advertisement of attribute flags associated with prefix advertisements. Knowing if an advertised prefix is directly connected to the advertising router helps to determine how labels that are associated with an incoming packet should be processed.

This section describes the behavior of each flag when a prefix advertisement is learned from one level to another.

**Note** Prefix attributes are only added when wide metric is used.

### Prefix Attribute Flags Sub-TLV Format

```
 0 1 2 3 4 5 6 7 ...
+-+-+-+-+-+-+-+-+...
|X|R|N|          ...
+-+-+-+-+-+-+-+-+...
```

### Prefix Attribute Flags Sub-TLV Fields

| Field | Description |
|---|---|
| X (External Prefix Flag) | This flag is set if the prefix has been redistributed from another protocol. The value of the flag is preserved when the prefix is propagated to another level. |
| R (Re-advertisement Flag) | This flag is set to 1 by the Level 1-2 router when the prefix is propagated between IS-IS levels (from Level 1 to Level 2, or from Level 2 to Level 1).<br>This flag is set to 0 when the prefix is connected locally to an IS-IS-enabled interface (regardless of the level configured on the interface). |

| Field | Description |
|---|---|
| N (Node Flag) | For prefixes that are propagated from another level:<br>**1.** Copy the N-flag from the prefix attribute sub-TLV, if present in the source level.<br>**2.** Copy the N-flag from the prefix-SID sub-TLV, if present in the source level.<br>**3.** Otherwise, set to 0.<br><br>For connected prefixes:<br>**1.** Set to 0 if **prefix-attributes n-flag-clear** is configured (see Configuring Prefix Attribute N-flag-clear).<br>**2.** Set to 0 if **n-flag-clear** { **n-flag-clear***SID-index* \| **n-flag-clear***SID-value*} **n-flag-clear** is configured (see Configuring a Prefix-SID on the IS-IS Enabled Loopback Interface).<br>**3.** Otherwise, set to 1 when the prefix is a host prefix (/32 for IPV4, /128 for IPv6) that is associated with a loopback address.<br>**Note** If the flag is set and the prefix length is not a host prefix, then the flag must be ignored. |

# IPv4 and IPv6 Source Router ID

The Source Router ID sub-TLV identifies the source of the prefix advertisement. The IPv4 and IPv6 source router ID is displayed in the output of the **show isis database verbose** command.

The Source Router ID sub-TLV is added when the following conditions are met:

1. The prefix is locally connected.
2. The N-flag is set to 1 (when it's a host prefix and the **n-flag-clear** configuration is not used).
3. The router ID is configured in the corresponding address family.

The source router ID is propagated between levels.

***Table 25: Source Router Sub-TLV Format***

| | |
|---|---|
| IPv4 Source Router ID | Type: 11<br>Length: 4<br>Value: IPv4 Router ID of the source of the prefix advertisement |
| IPv6 Source Router ID | Type: 12<br>Length: 16<br>Value: IPv6 Router ID of the source of the prefix advertisement |

# Configuring Prefix Attribute N-flag-clear

The N-flag is set to 1 when the prefix is a host prefix (/32 for IPV4, /128 for IPv6) that is associated with a loopback address. The advertising router can be configured to not set this flag. This task explains how to clear the N-flag.

## SUMMARY STEPS

1. **configure**
2. **router isis** *instance-id*
3. **interface Loopback** *instance*
4. **prefix-attributes n-flag-clear** [**Level-1** | **Level-2**]
5. Use the **commit** or **end** command.

## DETAILED STEPS

| | Command or Action | Purpose |
|---|---|---|
| **Step 1** | **configure**<br>**Example:**<br>`RP/0/RSP0/CPU0:router# configure` | Enters global configuration mode. |
| **Step 2** | **router isis** *instance-id*<br>**Example:**<br>`RP/0/RSP0/CPU0:router(config)# router isis 1` | |
| **Step 3** | **interface Loopback** *instance*<br>**Example:**<br>`RP/0/RSP0/CPU0:router(config)# interface Loopback0` | Specifies the loopback interface. |
| **Step 4** | **prefix-attributes n-flag-clear** [**Level-1** \| **Level-2**]<br>**Example:**<br>`RP/0/RSP0/CPU0:router(config-if)# isis prefix-attributes n-flag-clear` | Clears the prefix attribute N-flag explicitly. |
| **Step 5** | Use the **commit** or **end** command. | **commit** —Saves the configuration changes and remains within the configuration session.<br>**end** —Prompts user to take one of these actions:<br>• **Yes** — Saves configuration changes and exits the configuration session.<br>• **No** —Exits the configuration session without committing the configuration changes. |

| | Command or Action | Purpose |
|---|---|---|
| | | • **Cancel** —Remains in the configuration session, without committing the configuration changes. |

Verify the prefix attribute configuration:

```
RP/0/RSP0/CPU0:router# show isis database verbose

IS-IS 1 (Level-2) Link State Database
LSPID                 LSP Seq Num  LSP Checksum  LSP Holdtime  ATT/P/OL
router.00-00        * 0x0000039b   0xfc27        1079            0/0/0
  Area Address: 49.0001
  NLPID:        0xcc
  NLPID:        0x8e
  MT:           Standard (IPv4 Unicast)
  MT:           IPv6 Unicast                                    0/0/0
  Hostname:     router
  IP Address:   10.0.0.1
  IPv6 Address: 2001:0db8:1234::0a00:0001
  Router Cap:   10.0.0.1, D:0, S:0
    Segment Routing: I:1 V:1, SRGB Base: 16000 Range: 8000
    SR Algorithm:
      Algorithm: 0
      Algorithm: 1
<...>
  Metric: 0          IP-Extended 10.0.0.1/32
    Prefix-SID Index: 1001, Algorithm:0, R:1 N:0 P:1 E:0 V:0 L:0
    Prefix Attribute Flags: X:0 R:1 N:0
  Metric: 10         IP-Extended 10.0.0.2/32
    Prefix-SID Index: 1002, Algorithm:0, R:0 N:1 P:0 E:0 V:0 L:0
    Prefix Attribute Flags: X:0 R:0 N:1
    Source Router ID: 10.0.0.2
<...>
```

# IS-IS Multi-Domain Prefix SID and Domain Stitching: Example

IS-IS Multi-Domain Prefix SID and Domain Stitching allows you to configure multiple IS-IS instances on the same loopback interface for domain border nodes. You specify a loopback interface and prefix SID under multiple IS-IS instances to make the prefix and prefix SID reachable in different domains.

This example uses the following topology. Node 5 and 9 are border nodes between two IS-IS domains (Domain1 and Domain2). Node 10 is configured as the Segment Routing Path Computation Element (SR-PCE).

*Figure 17: Multi-Domain Topology*

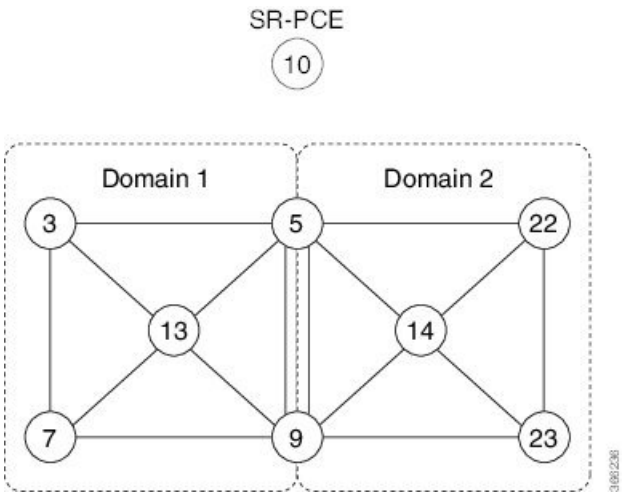


# Configure IS-IS Multi-Domain Prefix SID

Specify a loopback interface and prefix SID under multiple IS-IS instances on each border node:

```
Example: Border Node 5
router isis Domain1
 interface Loopback0
  address-family ipv4 unicast
   prefix-sid absolute 16005

router isis Domain2
 interface Loopback0
  address-family ipv4 unicast
   prefix-sid absolute 16005


Example: Border Node 9
router isis Domain1
 interface Loopback0
  address-family ipv4 unicast
   prefix-sid absolute 16009

router isis Domain2
 interface Loopback0
  address-family ipv4 unicast
   prefix-sid absolute 16009
```

Border nodes 5 and 9 each run two IS-IS instances (Domain1 and Domain2) and advertise their Loopback0 prefix and prefix SID in both domains.

Nodes in both domains can reach the border nodes by using the same prefix and prefix SID. For example, Node 3 and Node 22 can reach Node 5 using prefix SID 16005.

# Configure Common Router ID

On each border node, configure a common TE router ID under each IS-IS instance:

```
Example: Border Node 5
router isis Domain1
 address-family ipv4 unicast
  router-id loopback0

router isis Domain2
 address-family ipv4 unicast
  router-id loopback0
```

```
Example: Border Node 9
router isis Domain1
 address-family ipv4 unicast
  router-id loopback0

router isis Domain2
 address-family ipv4 unicast
  router-id loopback0
```

# Distribute IS-IS Link-State Data

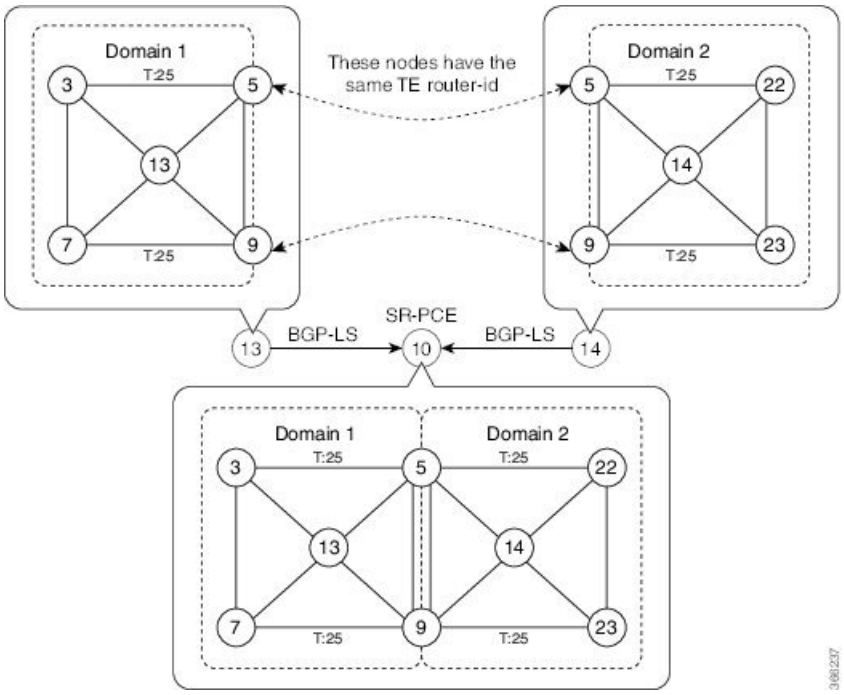


Configure BGP Link-state (BGP-LS) on Node 13 and Node 14 to report their local domain to Node 10:

```
Example: Node 13
router isis Domain1
 distribute link-state instance-id instance-id
```

```
Example: Node 14
router isis Domain2
 distribute link-state instance-id instance-id
```

Link-state ID starts from 32. One ID is required per IGP domain. Different domain IDs are essential to identify that the SR-TE TED belongs to a particular IGP domain.

Nodes 13 and 14 each reports its local domain in BGP-LS to Node 10.

Node 10 identifies the border nodes (Nodes 5 and 9) by their common advertised TE router ID, then combines (stitches) the domains on these border nodes for end-to-end path computations.

# IS-IS Unreachable Prefix Announcement

*Table 26: Feature History Table*

| Feature Name | Release | Description |
|---|---|---|
| IS-IS Unreachable Prefix Announcement | Release 7.8.1 | The Unreachable Prefix Announcement (UPA) notifies the loss of prefix reachability between areas or domains, for prefixes that are covered by the summary address range during inter-area or inter-domain summarization.<br>This feature helps in identifying the routers that are facing prefix unreachability issues faster and fix it.<br>The new commands introduced for this feature are:<br>• summary-prefix<br>• prefix-unreachable |

The organization of networks into levels or areas and/or IGP domains helps to limit the scope of link-state information within certain boundaries. However, the state that is related to prefix reachability often requires propagation across these areas (Level1/Level2) or domains (Autonomous System Boundary Router (ASBR)). An Autonomous System Boundary Router (ASBR) is a router that is running multiple protocols and serves as a gateway to routers outside the Open Shortest Path First (OSPF) domain and those operating with different protocols.

Route summarization, also known as route aggregation, is a method to minimize the number of routing tables in an IP network. It consolidates selected multiple routes into a single route advertisement.

Techniques such as summarization address the scale challenges associated with the advertizement of the individual prefix state outside of local area/domain. MPLS architecture did not allow for the effective use of the summarization due to its end-to-end Label Switched Path (LSP) requirement. With the introduction of the SRv6, which does not have such requirement, the use of summarization has become important again.

Summarization results in suppression of the individual prefix state that is useful for triggering fast-convergence mechanisms outside of the Interior Gateway Routing Protocols (IGPs (for example - Border Gateway Protocol - Prefix Independent Convergence (BGP PIC) Edge).

This feature enables the notification of the individual prefixes becoming unreachable in its area/domain, when the summarization is used between areas/domains to advertise the reachability for these prefixes.

There are existing SRv6 deployments that use summarization and require fast detection of the egress Provider Edge (PE) going down. To address these deployments in timely manner, we use the existing Protocol Data Units (PDUs) and Tag-Length-Values (TLVs), which is based on the Prefix Unreachability Advertisement (UPA).

# Configuration Steps

The configuration steps that are required to set up the Unreachable Prefix Announcement (UPA) feature are as follows:

- **UPA Advertisement**

  An existing IS-IS address-family submode **summary-prefix** command was extended for UPA advertisement.

```
Router(config)#router isis 1
Router(config-isis)#address-family ipv6 unicast
Router(config-isis-af)#summary-prefix beef:10::/32 level 2 adv-unreachable
Router(config-isis-af)#summary-prefix beef:11::/32 level 2 algorithm 128 adv-unreachable
 unreachable-component-tag 777
Router(config-isis-af)#commit
```

- **Prefix Unreachable**

  The new **prefix-unreachable** command includes new commands that control the UPA advertisement such as, lifetime, metric, limit the maximum number if UPAs and UPA processing. For more details see, prefix-unreachable

```
Router(config)#router isis 1
Router(config-isis)#address-family ipv6
Router(config-isis-af)#prefix-unreachable
Router(config-isis-prefix-unreachable)#adv-lifetime 500
Router(config-isis-prefix-unreachable)#adv-metric 4261412866
Router(config-isis-prefix-unreachable)#adv-maximum 77
Router(config-isis-prefix-unreachable)#rx-process-enable
Router(config-isis-prefix-unreachable)#commit
```

### Running Configuration

Execute the following show commands to review the L1/L2 (area) or ASBR (domain) running configuration:

Run the **show run router isis 1 address-family ipv6 unicast** command to view the summary prefix under as well as UPA parameters under it.

```
Router#sh run router isis 1 address-family ipv6 unicast
router isis 1
 address-family ipv6 unicast
  advertise application lfa link-attributes srlg
  advertise link attributes
  prefix-unreachable
   adv-lifetime 300
  !
  summary-prefix 10::/64
  summary-prefix beef:10::/32 adv-unreachable
  summary-prefix beef:11::/32 algorithm 128 adv-unreachable
  summary-prefix ceef:10::/32 adv-unreachable
  propagate level 2 into level 1 route-policy L2_TO_L1
  segment-routing srv6
   locator USID_ALG0
   !
   locator USID_ALG128
   !
  !
 !
!
```

# Conditional Prefix Advertisement

In some situations, it's beneficial to make the IS-IS prefix advertisement conditional. For example, an Area Border Router (ABR) or Autonomous System Boundary Router (ASBR) that has lost its connection to one of the areas or autonomous systems (AS) might keep advertising a prefix. If an ABR or ASBR advertises the Segment Routing (SR) SID with this prefix, the label stack of the traffic routed toward the disconnected area or AS might use this SID, which would result in dropped traffic at the ABR or ASBR.

ABRs or ASBRs are often deployed in pairs for redundancy and advertise a shared Anycast prefix SID. Conditional Prefix Advertisement allows an ABR or an ASBR to advertise its Anycast SID only when connected to a specific area or domain. If an ABR or ASBR becomes disconnected from the particular area or AS, it stops advertising the address for a specified interface (for example, Loopback).

Configure the conditional prefix advertisement under a specific interface. The prefix advertisement on this interface is associated with the route-policy that tracks the presence of a set of prefixes (prefix-set) in the Routing Information Base (RIB).

For faster convergence, the route-policy used for conditional prefix advertisement uses the new event-based **rib-has-route async** condition to notify IS-IS of the following situations:

- When the last prefix from the prefix-set is removed from the RIB.
- When the first prefix from the prefix-set is added to the RIB.

### Configuration

To use the conditional prefix advertisement in IS-IS, create a prefix-set to be tracked. Then create a route policy that uses the prefix-set.

```
Router(config)# prefix-set prefix-set-name
Router(config-pfx)# prefix-address-1/length[, prefix-address-2/length,,,
prefix-address-16/length]
Router(config-pfx)# end-set

Router(config)# route-policy rpl-name
Router(config-rpl)# if rib-has-route async prefix-set-name then
Router(config-rpl-if)# pass
Router(config-rpl-if)# endif
Router(config-rpl)# end-policy
```

To advertise the loopback address in IS-IS conditionally, use the **advertise prefix route-policy** command under IS-IS interface address-family configuration sub-mode.

```
Router(config)# router isis 1
Router(config-isis)# interface Loopback0
Router(config-isis-if)# address-family ipv4 unicast
Router(config-isis-if-af)# advertise prefix route-policy rpl-name
Router(config-isis-if-af)# commit
```

### Example

```
Router(config)# prefix-set domain_2
Router(config-pfx)# 2.3.3.3/32, 2.4.4.4/32
Router(config-pfx)# end-set
Router(config)# route-policy track_domain_2
```

```
Router(config-rpl)# if rib-has-route async domain_2 then
Router(config-rpl-if)# pass
Router(config-rpl-if)# endif
Router(config-rpl)# end-policy
Router(config)# router isis 1
Router(config-isis)# interface Loopback0
Router(config-isis-if)# address-family ipv4 unicast
Router(config-isis-if-af)# advertise prefix route-policy track_domain-2
Router(config-isis-if-af)# commit
```

### Running Configuration

```
prefix-set domain_2
  2.3.3.3/32,
  2.4.4.4/32
end-set
!
route-policy track_domain_2
  if rib-has-route async domain_2 then
    pass
  endif
end-policy
!
router isis 1
 interface Loopback0
  address-family ipv4 unicast
   advertise prefix route-policy track_domain_2
  !
 !
!
```

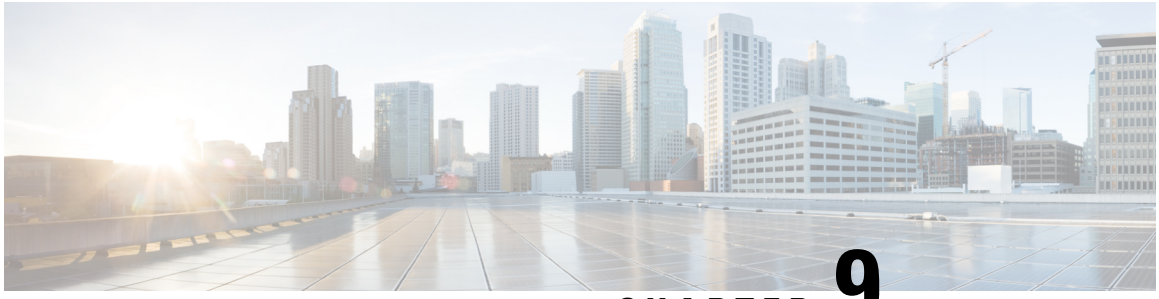

CHAPTER 9

# Configure Segment Routing for OSPF Protocol

Open Shortest Path First (OSPF) is an Interior Gateway Protocol (IGP) developed by the OSPF working group of the Internet Engineering Task Force (IETF). Designed expressly for IP networks, OSPF supports IP subnetting and tagging of externally derived routing information. OSPF also allows packet authentication and uses IP multicast when sending and receiving packets.

This module provides the configuration information to enable segment routing for OSPF.

**Note** For additional information on implementing OSPF on your Cisco ASR 9000 Series Router, see the *Implementing OSPF* module in the *Cisco ASR 9000 Series Aggregation Services Router Routing Configuration Guide*.


- Enabling Segment Routing for OSPF Protocol, on page 237
- Configuring a Prefix-SID on the OSPF-Enabled Loopback Interface, on page 239
- Configuring an Adjacency SID, on page 241
- Conditional Prefix Advertisement, on page 245


# Enabling Segment Routing for OSPF Protocol

Segment routing on the OSPF control plane supports the following:

- OSPFv2 control plane
- Multi-area
- IPv4 prefix SIDs for host prefixes on loopback interfaces
- Adjacency SIDs for adjacencies
- MPLS penultimate hop popping (PHP) and explicit-null signaling

This section describes how to enable segment routing MPLS and MPLS forwarding in OSPF. Segment routing can be configured at the instance, area, or interface level.

### Before you begin

Your network must support the MPLS Cisco IOS XR software feature before you enable segment routing for OSPF on your router.

**Note** You must enter the commands in the following task list on every OSPF router in the traffic-engineered portion of your network.

## SUMMARY STEPS

1. **configure**
2. **router ospf** *process-name*
3. **segment-routing mpls**
4. **segment-routing sr-prefer**
5. **area** *area*
6. **segment-routing mpls**
7. **exit**
8. Use the **commit** or **end** command.

## DETAILED STEPS

| | Command or Action | Purpose |
|---|---|---|
| **Step 1** | **configure**<br>**Example:**<br>`RP/0/RSP0/CPU0:router# configure` | Enters global configuration mode. |
| **Step 2** | **router ospf** *process-name*<br>**Example:**<br>`RP/0/RSP0/CPU0:router(config)# router ospf 1` | Enables OSPF routing for the specified routing process and places the router in router configuration mode. |
| **Step 3** | **segment-routing mpls**<br>**Example:**<br>`RP/0/RSP0/CPU0:router(config-ospf)# segment-routing mpls` | Enables segment routing using the MPLS data plane on the routing process and all areas and interfaces in the routing process.<br>Enables segment routing fowarding on all interfaces in the routing process and installs the SIDs received by OSPF in the forwarding table. |
| **Step 4** | **segment-routing sr-prefer**<br>**Example:**<br>`RP/0/RSP0/CPU0:router(config-ospf)# segment-routing sr-prefer` | Sets the preference of segment routing (SR) labels over label distribution protocol (LDP) labels. |
| **Step 5** | **area** *area*<br>**Example:**<br>`RP/0/RSP0/CPU0:router(config-ospf)# area 0` | Enters area configuration mode. |
| **Step 6** | **segment-routing mpls**<br>**Example:** | (Optional) Enables segment routing using the MPLS data plane on the area and all interfaces in the area. Enables |

| | Command or Action | Purpose |
|---|---|---|
| | `RP/0/RSP0/CPU0:router(config-ospf-ar)# segment-routing mpls` | segment routing fowarding on all interfaces in the area and installs the SIDs received by OSPF in the forwarding table. |
| **Step 7** | **exit**<br>**Example:**<br>`RP/0/RSP0/CPU0:router(config-ospf-ar)# exit`<br>`RP/0/RSP0/CPU0:router(config-ospf)# exit` | |
| **Step 8** | Use the **commit** or **end** command. | **commit** —Saves the configuration changes and remains within the configuration session.<br>**end** —Prompts user to take one of these actions:<br>• **Yes** — Saves configuration changes and exits the configuration session.<br>• **No** —Exits the configuration session without committing the configuration changes.<br>• **Cancel** —Remains in the configuration session, without committing the configuration changes. |

### What to do next

Configure the prefix SID.

# Configuring a Prefix-SID on the OSPF-Enabled Loopback Interface

A prefix segment identifier (SID) is associated with an IP prefix. The prefix SID is manually configured from the segment routing global block (SRGB) range of labels. A prefix SID is configured under the loopback interface with the loopback address of the node as the prefix. The prefix segment steers the traffic along the shortest path to its destination.

A prefix SID can be a node SID or an Anycast SID. A node SID is a type of prefix SID that identifies a specific node. An Anycast SID is a type of prefix SID that identifies a set of nodes, and is configured with n-flag clear. The set of nodes (Anycast group) is configured to advertise a shared prefix address and prefix SID. Anycast routing enables the steering of traffic toward multiple advertising nodes. Packets addressed to an Anycast address are forwarded to the topologically nearest nodes.

The prefix SID is globally unique within the segment routing domain.

This task describes how to configure prefix segment identifier (SID) index or absolute value on the OSPF-enabled Loopback interface.

### Before you begin

Ensure that segment routing is enabled on an instance, area, or interface.

## SUMMARY STEPS

1. **configure**
2. **router ospf** *process-name*
3. **area** *value*
4. **interface Loopback** *interface-instance*
5. **prefix-sid** [**strict-spf** | **algorithm** *algorithm-number*] {**index** *SID-index* | **absolute** *SID-value* } [**n-flag-clear**] [**explicit-null**]
6. Use the **commit** or **end** command.

## DETAILED STEPS

| | Command or Action | Purpose |
|---|---|---|
| **Step 1** | **configure**<br>**Example:**<br>`RP/0/RSP0/CPU0:router# configure` | Enters global configuration mode. |
| **Step 2** | **router ospf** *process-name*<br>**Example:**<br>`RP/0/RSP0/CPU0:router(config)# router ospf 1` | Enables OSPF routing for the specified routing process, and places the router in router configuration mode. |
| **Step 3** | **area** *value*<br>**Example:**<br>`RP/0/RSP0/CPU0:router(config-ospf)# area 0` | Enters area configuration mode. |
| **Step 4** | **interface Loopback** *interface-instance*<br>**Example:**<br>`RP/0/RSP0/CPU0:router(config-ospf-ar)# interface Loopback0 passive` | Specifies the loopback interface and instance. |
| **Step 5** | **prefix-sid** [**strict-spf** \| **algorithm** *algorithm-number*] {**index** *SID-index* \| **absolute** *SID-value* } [**n-flag-clear**] [**explicit-null**]<br>**Example:**<br>`RP/0/RSP0/CPU0:router(config-ospf-ar)# prefix-sid index 1001`<br>`RP/0/RSP0/CPU0:router(config-ospf-ar)# prefix-sid absolute 17001` | Configures the prefix-SID index or absolute value for the interface.<br>Specify **strict-spf** to configure the prefix-SID to use the SPF path instead of the SR-TE policy.<br>Specify **algorithm** *algorithm-number* to configure SR Flexible Algorithm.<br>Specify **index** *SID-index* for each node to create a prefix SID based on the lower boundary of the SRGB + the index.<br>Specify **absolute** *SID-value* for each node to create a specific prefix SID within the SRGB.<br>By default, the n-flag is set on the prefix-SID, indicating that it is a node SID. For specific prefix-SID (for example, Anycast prefix-SID), enter the `n-flag-clear` keyword. |

| | Command or Action | Purpose |
|---|---|---|
| | | OSPF does not set the `N` flag in the prefix-SID sub Type Length Value (TLV).<br>To disable penultimate-hop-popping (PHP) and add an explicit-Null label, enter the `explicit-null` keyword. OSPF sets the `E` flag in the prefix-SID sub TLV. |
| **Step 6** | Use the **commit** or **end** command. | **commit** —Saves the configuration changes and remains within the configuration session.<br>**end** —Prompts user to take one of these actions:<br>• **Yes** — Saves configuration changes and exits the configuration session.<br>• **No** —Exits the configuration session without committing the configuration changes.<br>• **Cancel** —Remains in the configuration session, without committing the configuration changes. |

Verify the prefix-SID configuration:

```
RP/0/RSP0/CPU0:router# show ospf database opaque-area 7.0.0.1 self-originate
 OSPF Router with ID (10.0.0.1) (Process ID 1)
                Type-10 Opaque Link Area Link States (Area 0)
<...>
    Extended Prefix TLV: Length: 20
      Route-type: 1
      AF        : 0
      Flags     : 0x40
      Prefix    : 10.0.0.1/32

      SID sub-TLV: Length: 8
        Flags     : 0x0
        MTID      : 0
        Algo      : 0
        SID Index : 1001
```

# Configuring an Adjacency SID

An adjacency SID (Adj-SID) is associated with an adjacency to a neighboring node. The adjacency SID steers the traffic to a specific adjacency. Adjacency SIDs have local significance and are only valid on the node that allocates them.

An adjacency SID can be allocated dynamically from the dynamic label range or configured manually from the segment routing local block (SRLB) range of labels.

Adjacency SIDs that are dynamically allocated do not require any special configuration, however there are some limitations:

- A dynamically allocated Adj-SID value is not known until it has been allocated, and a controller will not know the Adj-SID value until the information is flooded by the IGP.
- Dynamically allocated Adj-SIDs are not persistent and can be reallocated after a reload or a process restart.
- Each link is allocated a unique Adj-SID, so the same Adj-SID cannot be shared by multiple links.

Manually allocated Adj-SIDs are persistent over reloads and restarts. They can be provisioned for multiple adjacencies to the same neighbor or to different neighbors. You can specify that the Adj-SID is protected. If the Adj-SID is protected on the primary interface and a backup path is available, a backup path is installed. By default, manual Adj-SIDs are not protected.

Adjacency SIDs are advertised using the existing OSPF Adj-SID sub-TLV. The P-flag is defined for manually allocated Adj-SIDs.

```
 0 1 2 3 4 5 6 7
+-+-+-+-+-+-+-+-+
|B|V|L|G|P|     |
+-+-+-+-+-+-+-+-+
```

*Table 27: Adjacency Segment Identifier (Adj-SID) Flags Sub-TLV Fields*

| Field | Description |
|---|---|
| P (Persistent) | This flag is set if the Adj-SID is persistent (manually allocated). |

This task explains how to configure an Adj-SID on an interface.

### Before you begin

Ensure that segment routing is enabled on the corresponding address family.

Use the **show mpls label table detail** command to verify the SRLB range.

## SUMMARY STEPS

1. **configure**
2. **router ospf** *process-name*
3. **area** *area*
4. **interface** *type interface-path-id*
5. **adjacency-sid** {**index** *adj-SID-index* | **absolute** *adj-SID-value*} [**protected**]
6. Use the **commit** or **end** command.

## DETAILED STEPS

| | Command or Action | Purpose |
|---|---|---|
| **Step 1** | **configure**<br>**Example:**<br>`RP/0/RSP0/CPU0:router# configure` | Enters global configuration mode. |

| | Command or Action | Purpose |
|---|---|---|
| **Step 2** | **router ospf** *process-name*<br>**Example:**<br>`RP/0/RSP0/CPU0:router(config)# router ospf 1` | Enables OSPF routing for the specified routing instance, and places the router in router configuration mode. |
| **Step 3** | **area** *area*<br>**Example:**<br>`RP/0/RSP0/CPU0:router(config-ospf)# area 0` | Enters area configuration mode. |
| **Step 4** | **interface** *type interface-path-id*<br>**Example:**<br>`RP/0/RSP0/CPU0:router(config-ospf-ar)# interface HundredGigE0/0/0/1` | Specifies the interface and enters interface configuration mode. |
| **Step 5** | **adjacency-sid** {**index** *adj-SID-index* \| **absolute** *adj-SID-value*} [**protected**]<br>**Example:**<br>`RP/0/RSP0/CPU0:router(config-config-ospf-ar-if)# adjacency-sid index 10`<br>`RP/0/RSP0/CPU0:router(config-config-ospf-ar-if)# adjacency-sid absolute 15010` | Configures the Adj-SID index or absolute value for the interface.<br>Specify **index** *adj-SID-index* for each link to create an Ajd-SID based on the lower boundary of the SRLB + the index.<br>Specify **absolute** *adj-SID-value* for each link to create a specific Ajd-SID within the SRLB.<br>Specify if the Adj-SID is **protected**. For each primary path, if the Adj-SID is protected on the primary interface and a backup path is available, a backup path is installed. By default, manual Adj-SIDs are not protected. |
| **Step 6** | Use the **commit** or **end** command. | **commit** —Saves the configuration changes and remains within the configuration session.<br>**end** —Prompts user to take one of these actions:<br>• **Yes** — Saves configuration changes and exits the configuration session.<br>• **No** —Exits the configuration session without committing the configuration changes.<br>• **Cancel** —Remains in the configuration session, without committing the configuration changes. |

### What to do next

Configure the SR-TE policy.

# Protected Adjacency SID Backup Timer

OSPF advertises a protected adjacency SID for an adjacency when a backup path is available. Primary and backup paths are programmed into the label switching database (LSD) as rewrites.

When an adjacency goes down, OSPF stops advertising the protected adjacency SID immediately, and the backup path is promoted and installed as LSD rewrite. After a specified amount of time, the LSD rewrite is deleted. If the installed path fails again, the protection ends there and traffic through the original protected adjacency SID is permanently lost.

The Protected Adjacency SID Backup Timer provides a configurable maintenance time period. During this time period, OSPF updates the LSD rewrite with primary and backup (if available) paths to the neighbor upon topology changes.

### Configuration

Use the **segment-routing protected-adjacency-sid-delay** command in OSPF configuration mode. The range is from 30 to 3600 seconds; the default is 900 seconds (15 min).

```
Router(config)# router ospf 1
Router(config-ospf)# segment-routing protected-adjacency-sid-delay 360
```

### Running Configuration

```
router ospf 1
 segment-routing protected-adjacency-sid-delay 360
 area 1
  interface HundredGigE0/0/0/1
   fast-reroute per-prefix
   fast-reroute per-prefix ti-lfa enable
  !
 !
!
```

# Conditional Prefix Advertisement

*Table 28: Feature History Table*

| Feature Name | Release Information | Feature Description |
|---|---|---|
| Segment Routing Conditional Prefix Advertisement for OSPF | Release 7.3.1 | In a typical Anycast scenario, if an advertising node becomes unavailable or unreachable while still advertising its Anycast SID, traffic could still be routed to the node and, as a result, get dropped.<br>This feature allows a node to advertise its loopback address when it's connected to the domain, and to track the loopback addresses of the other nodes in the domain. If a node becomes unavailable or unreachable, it stops advertising its loopback address, allowing for a new path to be computed. |

In some situations, it's beneficial to make the OSPF prefix advertisement conditional. For example, an Area Border Router (ABR) or Autonomous System Boundary Router (ASBR) that has lost its connection to one of the areas or autonomous systems (AS) might keep advertising a prefix. If an ABR or ASBR advertises the Segment Routing (SR) SID with this prefix, the label stack of the traffic routed toward the disconnected area or AS might use this SID, which would result in dropped traffic at the ABR or ASBR.

ABRs or ASBRs are often deployed in pairs for redundancy and advertise a shared Anycast prefix SID. Conditional Prefix Advertisement allows an ABR or an ASBR to advertise its Anycast SID only when connected to a specific area or domain. If an ABR or ASBR becomes disconnected from the particular area or AS, it stops advertising the address for a specified interface (for example, Loopback).

Configure the conditional prefix advertisement under a specific interface. The prefix advertisement on this interface is associated with the route-policy that tracks the presence of a set of prefixes (prefix-set) in the Routing Information Base (RIB).

For faster convergence, the route-policy used for conditional prefix advertisement uses the new event-based **rib-has-route async** condition to notify OSPF of the following situations:

- When the last prefix from the prefix-set is removed from the RIB.
- When the first prefix from the prefix-set is added to the RIB.

### Configuration

To use the conditional prefix advertisement in OSPF, create a prefix-set to be tracked. Then create a route policy that uses the prefix-set.

```
Router(config)# prefix-set prefix-set-name
Router(config-pfx)# prefix-address-1/length[, prefix-address-2/length,,,
prefix-address-16/length]
```

```
Router(config-pfx)# end-set

Router(config)# route-policy rpl-name
Router(config-rpl)# if rib-has-route async prefix-set-name then
Router(config-rpl-if)# pass
Router(config-rpl-if)# endif
Router(config-rpl)# end-policy
```

To advertise the loopback address in OSPF conditionally, use the **advertise prefix route-policy** command under OSPF interface address-family configuration sub-mode.

```
Router(config)# router ospf 1
Router(config-ospf)# area 0
Router(config-ospf-ar)# interface Loopback0
Router(config-ospf-ar-if)# advertise prefix route-policy rpl-name
Router(config-ospf-ar-if)# commit
```

### Example

```
Router(config)# prefix-set domain_2
Router(config-pfx)# 2.3.3.3/32, 2.4.4.4/32
Router(config-pfx)# end-set
Router(config)# route-policy track_domain_2
Router(config-rpl)# if rib-has-route async domain_2 then
Router(config-rpl-if)# pass
Router(config-rpl-if)# endif
Router(config-rpl)# end-policy
Router(config)# router ospf 1
Router(config-ospf)# area 0
Router(config-ospf-ar)# interface Loopback0
Router(config-ospf-ar-if)# advertise prefix route-policy track_domain-2
Router(config-ospf-ar-if)# commit
```

### Running Configuration

```
prefix-set domain_2
  2.3.3.3/32,
  2.4.4.4/32
end-set
!
route-policy track_domain_2
  if rib-has-route async domain_2 then
    pass
  endif
end-policy
!
router ospf 1
 area 0
  interface Loopback0
   advertise prefix route-policy track_domain_2
  !
 !
!
```

CHAPTER 10

# Configure Segment Routing for BGP

Border Gateway Protocol (BGP) is an Exterior Gateway Protocol (EGP) that allows you to create loop-free inter-domain routing between autonomous systems. An autonomous system is a set of routers under a single technical administration. Routers in an autonomous system can use multiple Interior Gateway Protocols (IGPs) to exchange routing information inside the autonomous system and an EGP to route packets outside the autonomous system.

This module provides the configuration information used to enable Segment Routing for BGP.

**Note** For additional information on implementing BGP on your Cisco ASR 9000 Series Router, see the *Implementing BGP* module in the *Cisco ASR 9000 Series Aggregation Services Router Routing Configuration Guide*.


- Segment Routing for BGP, on page 247
- Configure BGP Prefix Segment Identifiers, on page 248
- Segment Routing Egress Peer Engineering, on page 249
- Configure BGP Link-State, on page 255
- Use Case: Configuring SR-EPE and BGP-LS, on page 259
- Configure BGP Proxy Prefix SID, on page 261
- BGP Best Path Computation using SR Policy Paths, on page 268


## Segment Routing for BGP

In a traditional BGP-based data center (DC) fabric, packets are forwarded hop-by-hop to each node in the autonomous system. Traffic is directed only along the external BGP (eBGP) multipath ECMP. No traffic engineering is possible.

In an MPLS-based DC fabric, the eBGP sessions between the nodes exchange BGP labeled unicast (BGP-LU) network layer reachability information (NLRI). An MPLS-based DC fabric allows any leaf (top-of-rack or border router) in the fabric to communicate with any other leaf using a single label, which results in higher packet forwarding performance and lower encapsulation overhead than traditional BGP-based DC fabric. However, since each label value might be different for each hop, an MPLS-based DC fabric is more difficult to troubleshoot and more complex to configure.

BGP has been extended to carry segment routing prefix-SID index. BGP-LU helps each node learn BGP prefix SIDs of other leaf nodes and can use ECMP between source and destination. Segment routing for BGP

simplifies the configuration, operation, and troubleshooting of the fabric. With segment routing for BGP, you can enable traffic steering capabilities in the data center using a BGP prefix SID.

# Configure BGP Prefix Segment Identifiers

Segments associated with a BGP prefix are known as BGP prefix SIDs. The BGP prefix SID is global within a segment routing or BGP domain. It identifies an instruction to forward the packet over the ECMP-aware best-path computed by BGP to the related prefix. The BGP prefix SID is manually configured from the segment routing global block (SRGB) range of labels.

Each BGP speaker must be configured with an SRGB using the **segment-routing global-block** command. See the About the Segment Routing Global Block section for information about the SRGB.

**Note** You must enable SR and explicitly configure the SRGB before configuring SR BGP. The SRGB must be explicitly configured, even if you are using the default range (16000 – 23999). BGP uses the SRGB and the index in the BGP prefix-SID attribute of a learned BGP-LU advertisement to allocate a local label for a given destination.

If SR and the SRGB are enabled after configuring BGP, then BGP is not aware of the SRGB, and therefore it allocates BGP-LU local labels from the dynamic label range instead of from the SRGB. In this case, restart the BGP process in order to allocate BGP-LU local labels from the SRGB.

**Note** Because the values assigned from the range have domain-wide significance, we recommend that all routers within the domain be configured with the same range of values.

To assign a BGP prefix SID, first create a routing policy using the **set label-index** *index* attribute, then associate the index to the node.

**Note** A routing policy with the **set label-index** attribute can be attached to a network configuration or redistribute configuration. Other routing policy language (RPL) configurations are possible. For more information on routing policies, refer to the "Implementing Routing Policy" chapter in the *Cisco ASR 9000 Series Aggregation Services Router Routing Configuration Guide*.

### Example

The following example shows how to configure the SRGB, create a BGP route policy using a $SID parameter and **set label-index** attribute, and then associate the prefix-SID index to the node.

```
RP/0/RSP0/CPU0:router(config)# segment-routing global-block 16000 23999

RP/0/RSP0/CPU0:router(config)# route-policy SID($SID)
RP/0/RSP0/CPU0:router(config-rpl)# set label-index $SID
RP/0/RSP0/CPU0:router(config-rpl)# end policy

RP/0/RSP0/CPU0:router(config)# router bgp 1
RP/0/RSP0/CPU0:router(config-bgp)# bgp router-id 10.1.1.1
```

```
RP/0/RSP0/CPU0:router(config-bgp)# address-family ipv4 unicast
RP/0/RSP0/CPU0:router(config-bgp-af)# network 10.1.1.3/32 route-policy SID(3)
RP/0/RSP0/CPU0:router(config-bgp-af)# allocate-label all
RP/0/RSP0/CPU0:router(config-bgp-af)# commit
RP/0/RSP0/CPU0:router(config-bgp-af)# end
```

```
RP/0/RSP0/CPU0:router# show bgp 10.1.1.3/32
BGP routing table entry for 10.1.1.3/32
Versions:
  Process           bRIB/RIB  SendTblVer
  Speaker                 74          74
    Local Label: 16003
Last Modified: Sep 29 19:52:18.155 for 00:07:22
Paths: (1 available, best #1)
  Advertised to update-groups (with more than one peer):
    0.2
  Path #1: Received by speaker 0
  Advertised to update-groups (with more than one peer):
    0.2
  3
    99.3.21.3 from 99.3.21.3 (10.1.1.3)
      Received Label 3
      Origin IGP, metric 0, localpref 100, valid, external, best, group-best
      Received Path ID 0, Local Path ID 1, version 74
      Origin-AS validity: not-found
      Label Index: 3
```

# Segment Routing Egress Peer Engineering

*Table 29: Feature History Table*

| Feature Name | Release Information | Feature Description |
|---|---|---|
| BGP PeerSet SID | Release 7.3.1 | BGP peer SIDs are used to express source-routed interdomain paths and are of two types: Peer Node SIDs and Peer Adjacency SIDs.<br><br>This release supports a new type of BGP peering SID, called BGP Peer Set SID. It is a group or set of BGP peer SIDs, that can provide load balancing over BGP neighbors (nodes) or links (adjacencies). The BGP peer Set SID can be associated with any combination of Peer Node SIDs or Peer Adjacency SIDs. |

Segment routing egress peer engineering (EPE) uses a controller to instruct an ingress provider edge, or a content source (node) within the segment routing domain, to use a specific egress provider edge (node) and a specific external interface to reach a destination. BGP peer SIDs are used to express source-routed inter-domain paths.

Below are the BGP-EPE peering SID types:

- PeerNode SID—To an eBGP peer. Pops the label and forwards the traffic on any interface to the peer.
- PeerAdjacency SID—To an eBGP peer via interface. Pops the label and forwards the traffic on the related interface.
- PeerSet SID—To a set of eBGP peers. Pops the label and forwards the traffic on any interface to the set of peers. All the peers in a set might not be in the same AS.

  Multiple PeerSet SIDs can be associated with any combination of PeerNode SIDs or PeerAdjacency SIDs.

The controller learns the BGP peer SIDs and the external topology of the egress border router through BGP-LS EPE routes. The controller can program an ingress node to steer traffic to a destination through the egress node and peer node using BGP labeled unicast (BGP-LU).

EPE functionality is only required at the EPE egress border router and the EPE controller.

# Usage Guidelines and Limitations

- When enabling BGP EPE, you must enable MPLS encapsulation on the egress interface connecting to the eBGP peer. This can be done by enabling either BGP labeled unicast (BGP-LU) address family or MPLS static for the eBGP peer.

  For information about BGP-LU, refer to the "Implementing BGP" chapter in the *Routing Configuration Guide for Cisco ASR 9000 Series Routers*.

  For information about MPLS static, refer to the "Implementing MPLS Static Labeling chapter in the *MPLS Configuration Guide for Cisco ASR 9000 Series Routers*.

# Configure Segment Routing Egress Peer Engineering

This task explains how to configure segment routing EPE on the EPE egress node.

### SUMMARY STEPS

1. **router bgp** *as-number*
2. **neighbor** *ip-address*
3. **remote-as** *as-number*
4. **egress-engineering**
5. **exit**
6. **mpls static**
7. **interface** *type interface-path-id*
8. Use the **commit** or **end** command.

## DETAILED STEPS

| | Command or Action | Purpose |
|---|---|---|
| **Step 1** | **router bgp** *as-number*<br>**Example:**<br>`RP/0/RSP0/CPU0:router(config)# router bgp 1` | Specifies the BGP AS number and enters the BGP configuration mode, allowing you to configure the BGP routing process. |
| **Step 2** | **neighbor** *ip-address*<br>**Example:**<br>`RP/0/RSP0/CPU0:router(config-bgp)# neighbor 192.168.1.3` | Places the router in neighbor configuration mode for BGP routing and configures the neighbor IP address as a BGP peer. |
| **Step 3** | **remote-as** *as-number*<br>**Example:**<br>`RP/0/RSP0/CPU0:router(config-bgp-nbr)# remote-as 3` | Creates a neighbor and assigns a remote autonomous system number to it. |
| **Step 4** | **egress-engineering**<br>**Example:**<br>`RP/0/RSP0/CPU0:router(config-bgp-nbr)# egress-engineering` | Configures the egress node with EPE for the eBGP peer. |
| **Step 5** | **exit**<br>**Example:**<br>`RP/0/RSP0/CPU0:router(config-bgp-nbr)# exit`<br>`RP/0/RSP0/CPU0:router(config-bgp)# exit`<br>`RP/0/RSP0/CPU0:router(config)#` | |
| **Step 6** | **mpls static**<br>**Example:**<br>`RP/0/RSP0/CPU0:router(config)# mpls static` | Configure MPLS static on the egress interface connecting to the eBGP peer. |
| **Step 7** | **interface** *type interface-path-id*<br>**Example:**<br>`RP/0/RSP0/CPU0:router(config-mpls-static)# interface GigabitEthernet0/0/1/2` | Specifies the egress interface connecting to the eBGP peer. |

| | Command or Action | Purpose |
|---|---|---|
| **Step 8** | Use the **commit** or **end** command. | **commit** —Saves the configuration changes and remains within the configuration session.<br>**end** —Prompts user to take one of these actions:<br>• **Yes** — Saves configuration changes and exits the configuration session.<br>• **No** —Exits the configuration session without committing the configuration changes.<br>• **Cancel** —Remains in the configuration session, without committing the configuration changes. |

**Example**

**Running Config:**

```
router bgp 1
 neighbor 192.168.1.3
  remote-as 3
  egress-engineering
  !
 !
mpls static
 interface GigabitEthernet0/0/1/2
 !
!
```

# Configuring Manual BGP-EPE Peering SIDs

*Table 30: Feature History Table*

| Feature Name | Release Information | Feature Description |
|---|---|---|
| Manual BGP-EPE Peer SIDs | Release 7.3.1 | BGP Peering SIDs that are allocated dynamically are not persistent and can be reallocated after a reload or a process restart.<br>This feature allows you to manually configure BGP Egress Peer Engineering (EPE) Peering SIDs. This functionality provides predictability, consistency, and reliability if there are system reloads or process restarts. |

Configuring manual BGP-EPE Peer SIDs allows for persistent EPE label values. Manual BGP-EPE SIDs are advertised through BGP-LS and are allocated from the Segment Routing Local Block (SRLB). See Configure

Segment Routing Global Block and Segment Routing Local Block, on page 203 for information about the SRLB.

Each PeerNode SID, PeerAdjacency SID, and PeerSet SID is configured with an index value. This index serves as an offset from the configured SRLB start value and the resulting MPLS label (SRLB start label + index) is assigned to these SIDs. This label is used by CEF to perform load balancing across the individual BGP PeerSet SIDs, BGP PeerNode SID, or ultimately across each first-hop adjacency associated with that BGP PeerNode SID or BGP PeerSet SID.

### Configuring Manual PeerNode SID

Each eBGP peer will be associated with a PeerNode SID index that is configuration driven.

```
RP/0/0/CPU0:PE1(config)# router bgp 10
RP/0/0/CPU0:PE1(config-bgp)# neighbor 10.10.10.2
RP/0/0/CPU0:PE1(config-bgp-nbr)# remote-as 20
RP/0/0/CPU0:PE1(config-bgp-nbr)# egress-engineering
RP/0/0/CPU0:PE1(config-bgp-nbr)# peer-node-sid index 600
```

### Configuring Manual PeerAdjacency SID

Any first-hop for which an adjacency SID is configured needs to be in the resolution chain of at least one eBGP peer that is configured for egress-peer engineering. Otherwise such a kind of “orphan” first-hop with regards to BGP has no effect on this feature. This is because BGP only understands next-hops learnt by the BGP protocol itself and in addition only the resolving IGP next-hops for those BGP next-hops.

```
RP/0/0/CPU0:PE1(config)# router bgp 10
RP/0/0/CPU0:PE1(config-bgp)# adjacencies
RP/0/0/CPU0:PE1(config-bgp-adj)# 10.1.1.2
RP/0/0/CPU0:PE1(config-bgp-adj)# adjacency-sid index 500
```

### Configuring Manual PeerSet SID

The PeerSet SID is configured under global Address Family. This configuration results in the creation of a Peer-Set SID EPE object.

```
RP/0/0/CPU0:PE1(config)# router bgp 10
RP/0/0/CPU0:PE1(config-bgp)# address-family ipv4 unicast
RP/0/0/CPU0:PE1(config-bgp-afi)# peer-set-id 1
RP/0/0/CPU0:PE1(config-bgp-peer-set)# peer-set-sid 300
```

### Example

#### Topology

The example in this section uses the following topology.

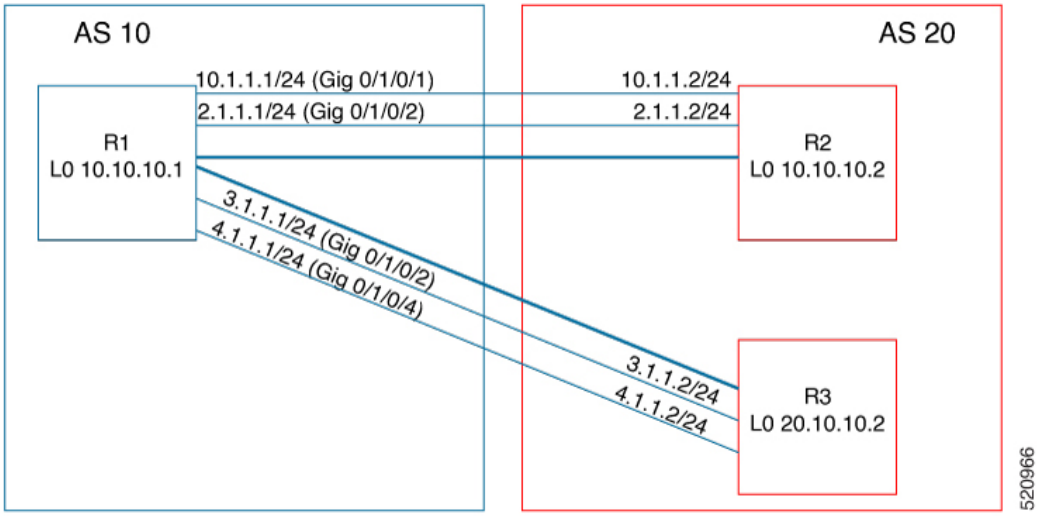


In this example, BGP-EPE peer SIDs are allocated from the default SRLB label range (15000 – 15999). The BGP-EPE peer SIDs are configured as follows:

- PeerNode SIDs to 10.10.10.2 with index 600 (label 15600), and for 20.10.10.2 with index 700 (label 15700)
- PeerAdj SID to link 10.1.1.2 with index 500 (label 15500)
- PeerSet SID 1 to load balance over BGP neighbors 10.10.10.1 and 20.10.10.2 with SID index 300 (label 15300)
- PeerSet SID 2 to load balance over BGP neighbor 20.10.10.2 and link 10.1.1.2 with SID index 400 (label 15400)

### Configuration on R1

```
router bgp 10
 address-family ipv4 unicast
  peer-set-id 1
   peer-set-sid index 300
  !
  peer-set-id 2
   peer-set-sid index 400
  !
 !
 adjacencies
  10.1.1.2
   adjacency-sid index 500
   peer-set 2
  !
 !
 neighbor 10.10.10.2
  remote-as 20
  egress-engineering
  peer-node-sid index 600
  peer-set 1
 !
 neighbor 20.10.10.2
  egress-engineering
  peer-node-sid index 700
  peer-set 1
```

```
 peer-set 2
!
```

To further show the load balancing of this example:

- 15600 is load balanced over {10.1.1.1 and 2.1.1.1}
- 15700 is load balanced over {3.1.1.1 and 4.1.1.1}
- 15500 is load balanced over {10.1.1.1}
- 15300 is load balanced over {10.1.1.1, 2.1.1.1, 3.1.1.1 and 4.1.1.1}
- 15400 is load balanced over {10.1.1.1, 3.1.1.1 and 4.1.1.1}

# Configure BGP Link-State

BGP Link-State (LS) is an Address Family Identifier (AFI) and Sub-address Family Identifier (SAFI) originally defined to carry interior gateway protocol (IGP) link-state information through BGP. The BGP Network Layer Reachability Information (NLRI) encoding format for BGP-LS and a new BGP Path Attribute called the BGP-LS attribute are defined in RFC7752. The identifying key of each Link-State object, namely a node, link, or prefix, is encoded in the NLRI and the properties of the object are encoded in the BGP-LS attribute.

The BGP-LS Extensions for Segment Routing are documented in RFC9085.

BGP-LS applications like an SR Path Computation Engine (SR-PCE) can learn the SR capabilities of the nodes in the topology and the mapping of SR segments to those nodes. This can enable the SR-PCE to perform path computations based on SR-TE and to steer traffic on paths different from the underlying IGP-based distributed best-path computation.

The following figure shows a typical deployment scenario. In each IGP area, one or more nodes (BGP speakers) are configured with BGP-LS. These BGP speakers form an iBGP mesh by connecting to one or more route-reflectors. This way, all BGP speakers (specifically the route-reflectors) obtain Link-State information from all IGP areas (and from other ASes from eBGP peers).

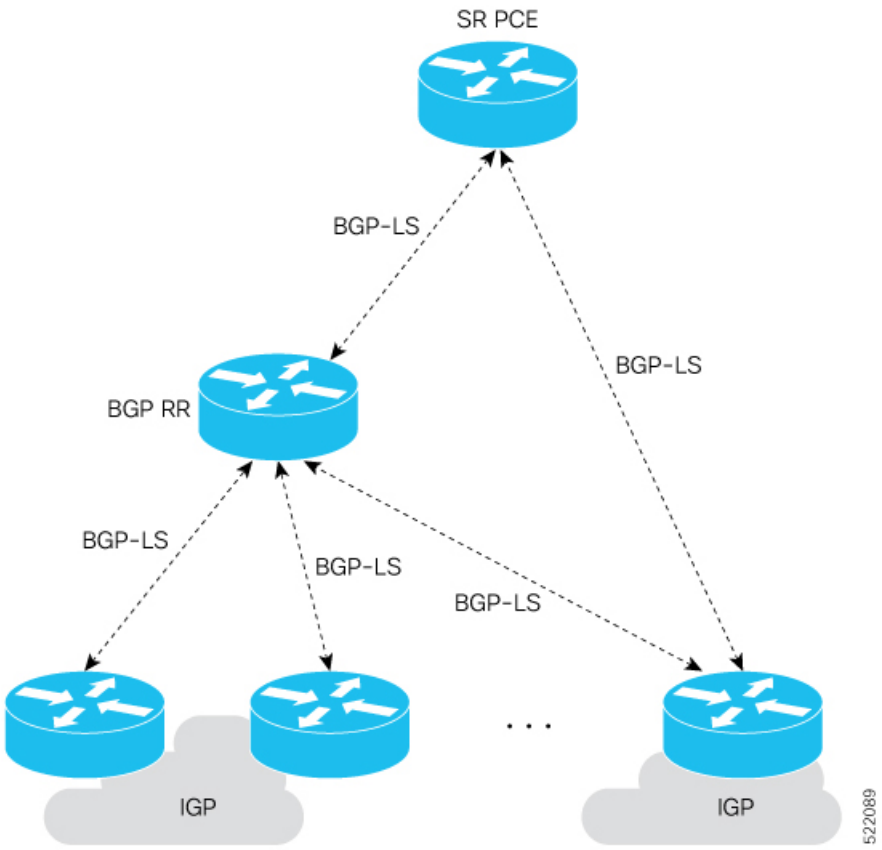


### Usage Guidelines and Limitations

- BGP-LS supports IS-IS and OSPFv2.
- The identifier field of BGP-LS (referred to as the Instance-ID) identifies the IGP routing domain where the NLRI belongs. The NLRIs representing link-state objects (nodes, links, or prefixes) from the same IGP routing instance must use the same Instance-ID value.
- When there is only a single protocol instance in the network where BGP-LS is operational, we recommend configuring the Instance-ID value to **0**.
- Assign consistent BGP-LS Instance-ID values on all BGP-LS Producers within a given IGP domain.
- NLRIs with different Instance-ID values are considered to be from different IGP routing instances.
- Unique Instance-ID values must be assigned to routing protocol instances operating in different IGP domains. This allows the BGP-LS Consumer (for example, SR-PCE) to build an accurate segregated multi-domain topology based on the Instance-ID values, even when the topology is advertised via BGP-LS by multiple BGP-LS Producers in the network.
- If the BGP-LS Instance-ID configuration guidelines are not followed, a BGP-LS Consumer may see duplicate link-state objects for the same node, link, or prefix when there are multiple BGP-LS Producers deployed. This may also result in the BGP-LS Consumers getting an inaccurate network-wide topology.

- The following table defines the supported extensions to the BGP-LS address family for carrying IGP topology information (including SR information) via BGP. For more information on the BGP-LS TLVs, refer to Border Gateway Protocol - Link State (BGP-LS) Parameters.

*Table 31: IOS XR Supported BGP-LS Node Descriptor, Link Descriptor, Prefix Descriptor, and Attribute TLVs*

| TLV Code Point | Description | Produced by IS-IS | Produced by OSPFv2 | Produced by BGP |
|---|---|---|---|---|
| 256 | Local Node Descriptors | X | X | — |
| 257 | Remote Node Descriptors | X | X | — |
| 258 | Link Local/Remote Identifiers | X | X | — |
| 259 | IPv4 interface address | X | X | — |
| 260 | IPv4 neighbor address | X | | |
| 261 | IPv6 interface address | X | — | — |
| 262 | IPv6 neighbor address | X | — | — |
| 263 | Multi-Topology ID | X | — | — |
| 264 | OSPF Route Type | — | X | — |
| 265 | IP Reachability Information | X | X | — |
| 266 | Node MSD TLV | X | X | — |
| 267 | Link MSD TLV | X | X | — |
| 512 | Autonomous System | — | — | X |
| 513 | BGP-LS Identifier | — | — | X |
| 514 | OSPF Area-ID | — | X | — |
| 515 | IGP Router-ID | X | X | — |
| 516 | BGP Router-ID TLV | — | — | X |
| 517 | BGP Confederation Member TLV | — | — | X |
| 1024 | Node Flag Bits | X | X | — |
| 1026 | Node Name | X | X | — |
| 1027 | IS-IS Area Identifier | X | — | — |
| 1028 | IPv4 Router-ID of Local Node | X | X | — |
| 1029 | IPv6 Router-ID of Local Node | X | — | — |
| 1030 | IPv4 Router-ID of Remote Node | X | X | — |
| 1031 | IPv6 Router-ID of Remote Node | X | — | — |
| 1034 | SR Capabilities TLV | X | X | — |
| 1035 | SR Algorithm TLV | X | X | — |
| 1036 | SR Local Block TLV | X | X | — |

| TLV Code Point | Description | Produced by IS-IS | Produced by OSPFv2 | Produced by BGP |
|---|---|---|---|---|
| 1039 | Flex Algo Definition (FAD) TLV | X | X | — |
| 1044 | Flex Algorithm Prefix Metric (FAPM) TLV | X | X | — |
| 1088 | Administrative group (color) | X | X | — |
| 1089 | Maximum link bandwidth | X | X | — |
| 1090 | Max. reservable link bandwidth | X | X | — |
| 1091 | Unreserved bandwidth | X | X | — |
| 1092 | TE Default Metric | X | X | — |
| 1093 | Link Protection Type | X | X | — |
| 1094 | MPLS Protocol Mask | X | X | — |
| 1095 | IGP Metric | X | X | — |
| 1096 | Shared Risk Link Group | X | X | — |
| 1099 | Adjacency SID TLV | X | X | — |
| 1100 | LAN Adjacency SID TLV | X | X | — |
| 1101 | PeerNode SID TLV | — | — | X |
| 1102 | PeerAdj SID TLV | — | — | X |
| 1103 | PeerSet SID TLV | — | — | X |
| 1114 | Unidirectional Link Delay TLV | X | X | — |
| 1115 | Min/Max Unidirectional Link Delay TLV | X | X | — |
| 1116 | Unidirectional Delay Variation TLV | X | X | — |
| 1117 | Unidirectional Link Loss | X | X | — |
| 1118 | Unidirectional Residual Bandwidth | X | X | — |
| 1119 | Unidirectional Available Bandwidth | X | X | — |
| 1120 | Unidirectional Utilized Bandwidth | X | X | — |
| 1122 | Application-Specific Link Attribute TLV | X | X | — |
| 1152 | IGP Flags | X | X | — |
| 1153 | IGP Route Tag | X | X | — |
| 1154 | IGP Extended Route Tag | X | — | — |
| 1155 | Prefix Metric | X | X | — |
| 1156 | OSPF Forwarding Address | — | X | — |
| 1158 | Prefix-SID | X | X | — |
| 1159 | Range | X | X | — |

| TLV Code Point | Description | Produced by IS-IS | Produced by OSPFv2 | Produced by BGP |
|---|---|---|---|---|
| 1161 | SID/Label TLV | X | X | — |
| 1170 | Prefix Attribute Flags | X | X | — |
| 1171 | Source Router Identifier | X | — | — |
| 1172 | L2 Bundle Member Attributes TLV | X | — | — |
| 1173 | Extended Administrative Group | X | X | — |

### Exchange Link State Information with BGP Neighbor

The following example shows how to exchange link-state information with a BGP neighbor:

```
Router# configure
Router(config)# router bgp 1
Router(config-bgp)# neighbor 10.0.0.2
Router(config-bgp-nbr)# remote-as 1
Router(config-bgp-nbr)# address-family link-state link-state
Router(config-bgp-nbr-af)# exit
```

### IGP Link-State Database Distribution

A given BGP node may have connections to multiple, independent routing domains. IGP link-state database distribution into BGP-LS is supported for both OSPF and IS-IS protocols in order to distribute this information on to controllers or applications that desire to build paths spanning or including these multiple domains.

To distribute IS-IS link-state data using BGP-LS, use the **distribute link-state** command in router configuration mode.

```
Router# configure
Router(config)# router isis isp
Router(config-isis)# distribute link-state instance-id 32
```

To distribute OSPFv2 link-state data using BGP-LS, use the **distribute link-state** command in router configuration mode.

```
Router# configure
Router(config)# router ospf 100
Router(config-ospf)# distribute link-state instance-id 32
```

# Use Case: Configuring SR-EPE and BGP-LS

In the following figure, segment routing is enabled on autonomous system AS1 with ingress node A and egress nodes B and C. In this example, we configure EPE on egress node C.

*Figure 18: Topology*

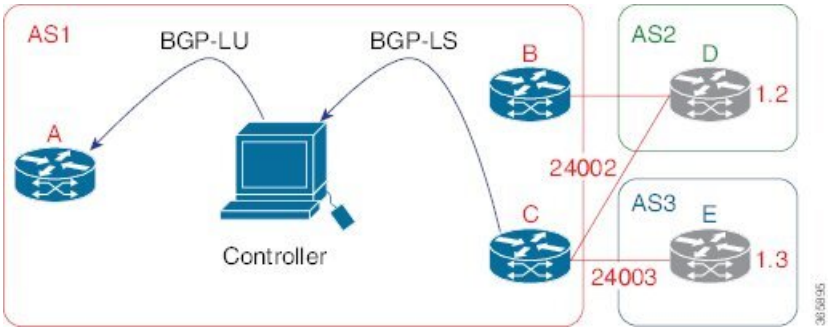


**Step 1** Configure node C with EPE for eBGP peers D and E.

**Example:**

```
RP/0/RSP0/CPU0:router_C(config)# router bgp 1
RP/0/RSP0/CPU0:router_C(config-bgp)# neighbor 192.168.1.3
RP/0/RSP0/CPU0:router_C(config-bgp-nbr)# remote-as 3
RP/0/RSP0/CPU0:router_C(config-bgp-nbr)# description to E
RP/0/RSP0/CPU0:router_C(config-bgp-nbr)# egress-engineering
RP/0/RSP0/CPU0:router_C(config-bgp-nbr)# address-family ipv4 unicast
RP/0/RSP0/CPU0:router_C(config-bgp-nbr-af)# route-policy bgp_in in
RP/0/RSP0/CPU0:router_C(config-bgp-nbr-af)# route-policy bgp_out out
RP/0/RSP0/CPU0:router_C(config-bgp-nbr-af)# exit
RP/0/RSP0/CPU0:router_C(config-bgp-nbr)# exit
RP/0/RSP0/CPU0:router_C(config-bgp)# neighbor 192.168.1.2
RP/0/RSP0/CPU0:router_C(config-bgp-nbr)# remote-as 2
RP/0/RSP0/CPU0:router_C(config-bgp-nbr)# description to D
RP/0/RSP0/CPU0:router_C(config-bgp-nbr)# egress-engineering
RP/0/RSP0/CPU0:router_C(config-bgp-nbr)# address-family ipv4 unicast
RP/0/RSP0/CPU0:router_C(config-bgp-nbr-af)# route-policy bgp_in in
RP/0/RSP0/CPU0:router_C(config-bgp-nbr-af)# route-policy bgp_out out
RP/0/RSP0/CPU0:router_C(config-bgp-nbr-af)# exit
RP/0/RSP0/CPU0:router_C(config-bgp-nbr)# exit
```

**Step 2** Configure node C to advertise peer node SIDs to the controller using BGP-LS.

**Example:**

```
RP/0/RSP0/CPU0:router_C(config-bgp)# neighbor 172.29.50.71
RP/0/RSP0/CPU0:router_C(config-bgp-nbr)# remote-as 1
RP/0/RSP0/CPU0:router_C(config-bgp-nbr)# description to EPE_controller
RP/0/RSP0/CPU0:router_C(config-bgp-nbr)# address-family link-state link-state
RP/0/RSP0/CPU0:router_C(config-bgp-nbr)# exit
RP/0/RSP0/CPU0:router_C(config-bgp)# exit
```

**Step 3** Configure MPLS static on the egress interfaces connecting to the eBGP peer.

**Example:**

```
RP/0/RSP0/CPU0:router_C(config)# mpls static
RP/0/RSP0/CPU0:router_C(config-mpls-static)# interface TenGigE 0/3/0/0
RP/0/RSP0/CPU0:router_C(config-mpls-static)# interface TenGigE 0/1/0/0
RP/0/RSP0/CPU0:router_C(config-mpls-static)# exit
```

**Step 4** Commit the configuration.

**Example:**

```
RP/0/RSP0/CPU0:router_C(config)# commit
```

**Step 5** Verify the configuration.

**Example:**

```
RP/0/RSP0/CPU0:router_C# show bgp egress-engineering

 Egress Engineering Peer Set: 192.168.1.2/32 (10b87210)
     Nexthop: 192.168.1.2
     Version: 2, rn_version: 2
       Flags: 0x00000002
   Local ASN: 1
  Remote ASN: 2
   Local RID: 10.1.1.3
  Remote RID: 10.1.1.4
   First Hop: 192.168.1.2
        NHID: 3
       Label: 24002, Refcount: 3
     rpc_set: 10b9d408

 Egress Engineering Peer Set: 192.168.1.3/32 (10be61d4)
     Nexthop: 192.168.1.3
     Version: 3, rn_version: 3
       Flags: 0x00000002
   Local ASN: 1
  Remote ASN: 3
   Local RID: 10.1.1.3
  Remote RID: 10.1.1.5
   First Hop: 192.168.1.3
        NHID: 4
       Label: 24003, Refcount: 3
     rpc_set: 10be6250
```

The output shows that node C has allocated peer SIDs for each eBGP peer.

**Example:**

```
RP/0/RSP0/CPU0:router_C# show mpls forwarding labels 24002 24003
Local  Outgoing    Prefix             Outgoing     Next Hop        Bytes
Label  Label       or ID              Interface                    Switched
------ ----------- ------------------ ------------ --------------- ------------
24002  Pop         No ID              Te0/3/0/0    192.168.1.2     0
24003  Pop         No ID              Te0/1/0/0    192.168.1.3     0
```

The output shows that node C installed peer node SIDs in the Forwarding Information Base (FIB).

# Configure BGP Proxy Prefix SID

To support segment routing, Border Gateway Protocol (BGP) requires the ability to advertise a segment identifier (SID) for a BGP prefix. A BGP-Prefix-SID is the segment identifier of the BGP prefix segment in

a segment routing network. BGP prefix SID attribute is a BGP extension to signal BGP prefix-SIDs. However, there may be routers which do not support BGP extension for segment routing. Hence, those routers also do not support BGP prefix SID attribute and an alternate approach is required.

BGP proxy prefix SID feature allows you to attach BGP prefix SID attributes for remote prefixes learnt from BGP labeled unicast (LU) neighbours which are not SR-capable and propagate them as SR prefixes. This allows an LSP towards non SR endpoints to use segment routing global block in a SR domain. Since BGP proxy prefix SID uses global label values it minimizes the use of limited resources such as ECMP-FEC and provides more scalability for the networks.

BGP proxy prefix SID feature is implemented using the segment routing mapping server (SRMS). SRMS allows the user to configure SID mapping entries to specify the prefix-SIDs for the prefixes. The mapping server advertises the local SID-mapping policy to the mapping clients. BGP acts as a client of the SRMS and uses the mapping policy to calculate the prefix-SIDs.

### Configuration Example:

This example shows how to configure the BGP proxy prefix SID feature for the segment routing mapping server.

```
RP/0/RSP0/CPU0:router(config)# segment-routing
RP/0/RSP0/CPU0:router(config-sr)# mapping-server
RP/0/RSP0/CPU0:router(config-sr-ms)# prefix-sid-map
RP/0/RSP0/CPU0:router(config-sr-ms-map)# address-family ipv4
RP/0/RSP0/CPU0:router(config-sr-ms-map-af)# 10.1.1.1/32 10 range 200
RP/0/RSP0/CPU0:router(config-sr-ms-map-af)# 192.168.64.1/32 400 range 300
```

This example shows how to configure the BGP proxy prefix SID feature for the segment-routing mapping client.

```
RP/0/RSP0/CPU0:router(config)# router bgp 1
RP/0/RSP0/CPU0:router(config-bgp)# address-family ip4 unicast
RP/0/RSP0/CPU0:router(config-bgp-af)# segment-routing prefix-sid-map
```

### Verification

These examples show how to verify the BGP proxy prefix SID feature.

```
RP/0/RSP0/CPU0:router# show segment-routing mapping-server prefix-sid-map ipv4 detail
Prefix
10.1.1.1/32
    SID Index:      10
    Range:          200
    Last Prefix:    10.1.1.200/32
    Last SID Index: 209
    Flags:
Number of mapping entries: 1


RP/0/RSP0/CPU0:router# show bgp ipv4 labeled-unicast 192.168.64.1/32

BGP routing table entry for 192.168.64.1/32
Versions:
  Process           bRIB/RIB  SendTblVer
  Speaker                117         117
  Local Label: 16400
Last Modified: Oct 25 01:02:28.562 for 00:11:45Paths: (2 available, best #1)
 Advertised to peers (in unique update groups):
   201.1.1.1
```

```
 Path #1: Received by speaker 0  Advertised to peers (in unique update groups):
    201.1.1.1
  Local
   20.0.101.1 from 20.0.101.1 (20.0.101.1)      Received Label 61
   Origin IGP, localpref 100, valid, internal, best, group-best, multipath, labeled-unicast

   Received Path ID 0, Local Path ID 0, version 117
  Prefix SID Attribute Size: 7
  Label Index: 1
```

```
RP/0/RSP0/CPU0:router# show route ipv4 unicast 192.68.64.1/32 detail

Routing entry for 192.168.64.1/32
  Known via "bgp 65000", distance 200, metric 0, [ei]-bgp, labeled SR, type internal
  Installed Oct 25 01:02:28.583 for 00:20:09
  Routing Descriptor Blocks
    20.0.101.1, from 20.0.101.1, BGP multi path
      Route metric is 0
      Label: 0x3d (61)
      Tunnel ID: None
      Binding Label: None
      Extended communities count: 0
      NHID:0x0(Ref:0)
   Route version is 0x6 (6)
  Local Label: 0x3e81 (16400)
  IP Precedence: Not Set
  QoS Group ID: Not Set
  Flow-tag: Not Set
  Fwd-class: Not Set
  Route Priority: RIB_PRIORITY_RECURSIVE (12) SVD Type RIB_SVD_TYPE_LOCAL
  Download Priority 4, Download Version 242
  No advertising protos.
```

```
RP/0/RSP0/CPU0:router# show cef ipv4 192.168.64.1/32 detail
192.168.64.1/32, version 476, labeled SR, drop adjacency, internal 0x5000001 0x80 (ptr
0x71c42b40) [1], 0x0 (0x71c11590), 0x808 (0x722b91e0)
 Updated Oct 31 23:23:48.733
 Prefix Len 32, traffic index 0, precedence n/a, priority 4
 Extensions: context-label:16400
  gateway array (0x71ae7e78) reference count 3, flags 0x7a, source rib (7), 0 backups
                [2 type 5 flags 0x88401 (0x722eb450) ext 0x0 (0x0)]
  LW-LDI[type=5, refc=3, ptr=0x71c11590, sh-ldi=0x722eb450]
  gateway array update type-time 3 Oct 31 23:49:11.720
 LDI Update time Oct 31 23:23:48.733
 LW-LDI-TS Oct 31 23:23:48.733
   via 20.0.101.1/32, 0 dependencies, recursive, bgp-ext [flags 0x6020]
    path-idx 0 NHID 0x0 [0x7129a294 0x0]
    recursion-via-/32
    unresolved
     local label 16400
     labels imposed {ExpNullv6}
```

```
RP/0/RSP0/CPU0:router# show bgp labels
BGP router identifier 2.1.1.1, local AS number 65000
BGP generic scan interval 60 secs
Non-stop routing is enabled
BGP table state: Active
Table ID: 0xe0000000   RD version: 245
BGP main routing table version 245
BGP NSR Initial initsync version 16 (Reached)
BGP NSR/ISSU Sync-Group versions 245/0
BGP scan interval 60 secs
```

```
Status codes: s suppressed, d damped, h history, * valid, > best
              i - internal, r RIB-failure, S stale, N Nexthop-discard
Origin codes: i - IGP, e - EGP, ? - incomplete
   Network            Next Hop        Rcvd Label      Local Label
*>i10.1.1.1/32        10.1.1.1        3               16010
*> 2.1.1.1/32         0.0.0.0         nolabel         3
*> 192.68.64.1/32     20.0.101.1      2               16400
*> 192.68.64.2/32     20.0.101.1      2               16401
```

# BGP-LU Inter-AS Option-C Interworking with LDP and IGP SR-MPLS using Proxy BGP-SR

*Table 32: Feature History Table*

| Feature Name | Release | Description |
|---|---|---|
| BGP-LU Inter-AS Option-C Interworking with LDP and IGP SR-MPLS using Proxy BGP-SR | Release 7.3.2 | This feature extends the current Proxy BGP-SR functionality by allowing the BGP-LU ASBR router with Proxy BGP-SR configured to also interconnect attached LDP domains.<br><br>The Proxy BGP-SR feature allows interconnection of IGP SR-MPLS domains and legacy domains via BGP-LU Inter-AS option-C. It provides a prefix-to-SID mapping for BGP-LU prefixes that are learned without a Prefix-SID. |

The Proxy BGP-SR feature allows interconnection of IGP SR-MPLS domains and legacy domains via BGP-LU Inter-AS option-C. It provides a prefix-to-SID mapping for BGP-LU prefixes that are learned without a Prefix-SID. This new feature extends the current functionality by allowing the BGP-LU ASBR router (configured with Proxy BGP-SR) to also interconnect attached LDP domains.

With this enhancement, when performing redistribution from BGP into IGP, LDP would use the same local label assigned by BGP for a prefix learned by BGP-LU. The local label value is based on the SR mapping server configuration (Proxy-BGP SR feature). This behavior allows incoming LDP traffic destined to a redistributed prefix to be switched over to the BGP-LU Inter-AS LSP.

### Use Case

In the following figure, Router A does the following:

- Is an ASBR for BGP AS 100 running BGP-LU with BGP AS 200
- Interconnects two IS-IS processes: one running LDP and another running Segment Routing
- Redistributes prefixes learned by BGP-LU from AS 200 into both IS-IS instances
- Runs SR Mapping Server (SRMS) in order to assign mappings to prefixes learned by BGP LU from AS 200 without a prefix SID (proxy BGP-SR) and prefixes learned from the LDP domain

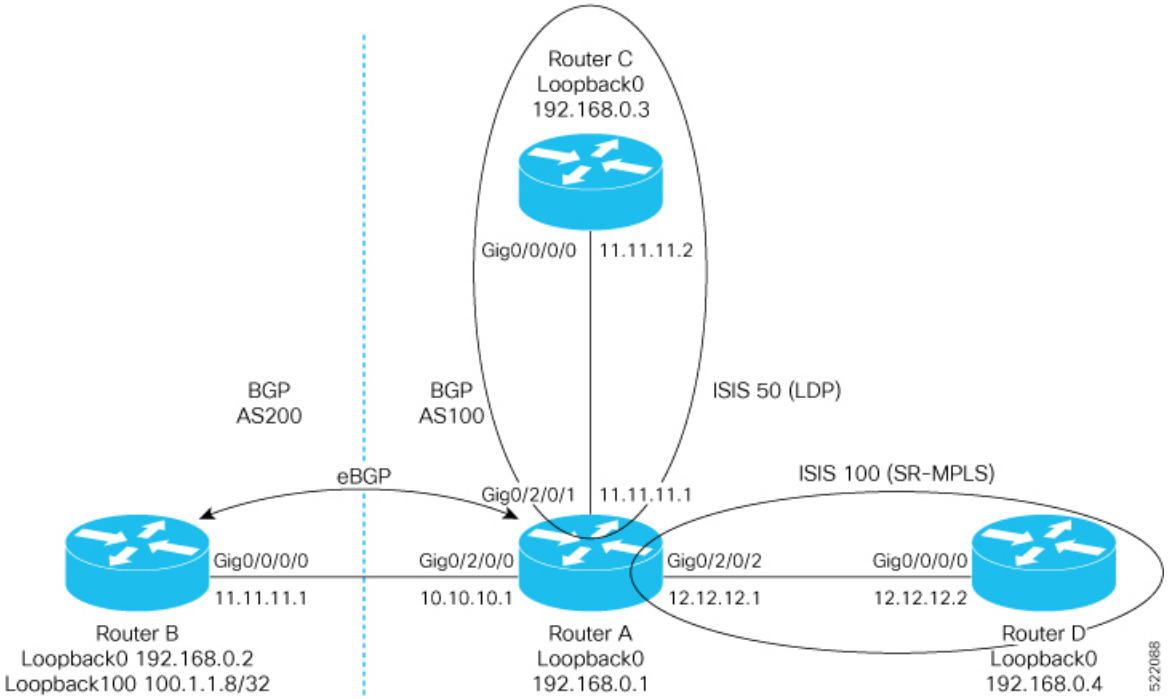


### Configuration on Router A - ASBR for AS100

```
prefix-set pfxset-bgplu
  100.1.1.8/32  // The Prefix under test
end-set
!
prefix-set LOOPBACKS
  192.168.0.1,
  192.168.0.2,
  192.168.0.3,
  192.168.0.4,
  192.168.0.8
end-set
!
route-policy Pass
  pass
end-policy
!
route-policy rpl-bgplu
  if destination in pfxset-bgplu then
    pass
  else
    drop
  endif
end-policy
!
route-policy MATCH_LOOPBACKS
  if destination in LOOPBACKS then
    pass
  else
    drop
  endif
end-policy
!
router static
```

```
 address-family ipv4 unicast
  10.10.10.2/32 GigabitEthernet0/2/0/0
 !
!
router isis 50
 is-type level-2-only
 net 49.0001.0000.0000.0001.00
 address-family ipv4 unicast
  metric-style wide
  redistribute bgp 100 route-policy rpl-bgplu  // Redistribute prefixes learned by BGP-LU
into IS-IS LDP domain
 !
 interface Loopback0
  passive
  address-family ipv4 unicast
  !
 !
 interface GigabitEthernet0/2/0/1
  address-family ipv4 unicast
  !
 !
!
router isis 100
 is-type level-2-only
 net 49.0001.0000.0000.0011.00
 distribute link-state
 address-family ipv4 unicast
  metric-style wide
  mpls traffic-eng level-2-only
  mpls traffic-eng router-id Loopback0
  redistribute bgp 100 route-policy rpl-bgplu  // Redistribute prefixes learned by BGP-LU
into IS-IS SR domain
  segment-routing mpls
  segment-routing prefix-sid-map advertise-local
 !
 interface Loopback0
  passive
  address-family ipv4 unicast
   prefix-sid index 1
  !
 !
 interface GigabitEthernet0/2/0/2
  address-family ipv4 unicast
  !
 !
!
router bgp 100
 bgp router-id 192.168.0.1
 address-family ipv4 unicast
  segment-routing prefix-sid-map  // SR Proxy SID Configuration
  network 192.168.0.1/32
  redistribute isis 50 route-policy MATCH_LOOPBACKS
  redistribute isis 100 route-policy MATCH_LOOPBACKS
  allocate-label all
 !
 neighbor 10.10.10.2
  remote-as 200
  address-family ipv4 labeled-unicast
   route-policy Pass in
   route-policy Pass out
  !
 !
!
mpls ldp
```

```
 router-id 192.168.0.1
 interface GigabitEthernet0/2/0/1
 !
!
segment-routing
 global-block 16000 23999
 mapping-server
  prefix-sid-map  // SRMS configuration
   address-family ipv4
    100.1.1.8/32 108 range 1  // SRMS mapping - LU prefix 100.1.1.8/32 assigned prefix index
 108
    192.168.0.3/32 3 range 1  // SRMS mapping - LDP prefix Router C assigned prefix index
3
   !
  !
 !
!
```

### Configuration on Router B - ASBR for AS200

```
route-policy Pass
  pass
end-policy
!
router static
 address-family ipv4 unicast
  10.10.10.1/32 GigabitEthernet0/0/0/0
 !
!
router bgp 200
 bgp router-id 192.168.0.2
 address-family ipv4 unicast
  network 100.1.1.8/32  // Import/Inject route into BGP
  network 192.168.0.2/32
  allocate-label all
 !
 neighbor 10.10.10.1
  remote-as 100
  address-family ipv4 labeled-unicast
   route-policy Pass in
   route-policy Pass out
  !
 !
!
```

### Configuration on Router C in the LDP Domain

```
router isis 50
 is-type level-2-only
 net 49.0001.0000.0000.0003.00
 address-family ipv4 unicast
  metric-style wide
 !
 interface Loopback0
  passive
  address-family ipv4 unicast
  !
 !
 interface GigabitEthernet0/0/0/0
  address-family ipv4 unicast
  !
 !
!
```

```
mpls ldp
 router-id 192.168.0.3
 interface GigabitEthernet0/0/0/0
 !
!
```

### Configuration on Router D in the SR IS-IS Domain

```
router isis 100
 is-type level-2-only
 net 49.0001.0000.0000.0004.00
 address-family ipv4 unicast
  metric-style wide
  mpls traffic-eng level-2-only
  mpls traffic-eng router-id Loopback0
  segment-routing mpls
 !
 interface Loopback0
  passive
  address-family ipv4 unicast
   prefix-sid index 4
  !
 !
 interface GigabitEthernet0/0/0/0
  address-family ipv4 unicast
  !
 !
!
segment-routing
!
```

# BGP Best Path Computation using SR Policy Paths

*Table 33: Feature History Table*

| Feature Name | Release Information | Feature Description |
|---|---|---|
| BGP Best Path Computation using SR Policy Paths | | BGP best-path selection is modified for a prefix when at least one of its paths resolves over the next hop using SR policies (SR policy in “up” state). Under this condition, paths not steered over an SR policy (those using native next-hop resolution) are considered ineligible during best-path selection.<br><br>You can thus control the best path selection in order to steer traffic, preferably or exclusively, over SR policies with the desired SLA.<br><br>This feature introduces the **bgp bestpath sr-policy {force \| prefer}** command. |

BGP selects the best path from the available pool of paths such as iBGP, eBGP, color, or noncolor paths with native next hop and SR policy next hop. BGP uses either native next hop or an SR policy next hop for best path computation. However, BGP might not consider SR policy next hop for best path computation due to other factors in best path selection. By default, BGP considers a native next hop for the best path computation during the failure.

For more information, see Best path calculation algorithm.

When multiple advertisements of the same BGP prefix are received where some have extended community color, SRTE headend with BGP multi-path enabled installs multiple routes with or without extended community color. It may be required to exclude the path resolving over native next hop SR policy paths from BGP best path selection when a prefix has multiple paths in the presence of one BGP path with the extended community color that is resolved over the SR policy.

You may want to use the egress PE to exit a domain using local preference or other attributes before the next hop metric selection. In such scenarios, when SR policy of the primary path fails, the best path is resolved over a regular IGP next hop that is the default mode of operation. Traffic doesn't select the backup path with SR policy, instead traffic moves to native LSP on the primary path.

The BGP Best Path Computation using SR Policy Paths feature allows the BGP to use the path with SR policy as the best-path, backup, and multipath.

When this feature is enabled, some paths are marked as an ineligible path for BGP best path selection. Existing BGP best path selection order is applied to the eligible paths.

Use either of the following modes for the BGP to select the SR policy path as the best path for the backup path:

- Force mode: When force mode is enabled, only SR policy paths are considered for best path calculation. Use the **bgp bestpath sr-policy force** command to enable this mode.

  In a network, when at least one path has an active SR policy, the following paths are marked as ineligible for best path selection:

  - iBGP paths with noncolor or color paths with SR policy that isn't active.
  - eBGP with color and SR policy isn't active.
  - eBGP noncolor paths

**Note** Local and redistributed BGP paths are always eligible for best path selection.

- Prefer mode: When prefer mode is enabled, SR policy paths and eBGP noncolor paths are eligible for best path calculation.

  Use the **bgp bestpath sr-policy prefer** command to enable this mode.

  In a network, when at least one path has an active SR policy, the following paths are marked as ineligible for best path selection:

  - iBGP paths with noncolor or color paths with SR policy that isn't active.
  - eBGP with color and SR policy isn't active.

**Note** Local and redistributed BGP paths are always eligible for best path selection.

### Configure BGP Best Path Computation using SR Policy Paths

To enable the feature, perform the following tasks on the ingress PE router that is the head-end of SR policy:

- Configure route policy.
- Configure SR policy.
- Configure BGP with either prefer or force mode.

### Configuration Example

Configure route policies on the egress PE router:

```
Router(config)#extcommunity-set opaque color9001
Router(config-ext)#9001 co-flag 01
Router(config-ext)#end-set
Router(config)#extcommunity-set opaque color9002
Router(config-ext)#9002 co-flag 01
Router(config-ext)#end-set
Router(config)#commitC

Router(config)#route-policy for9001
Router(config-rpl)#set extcommunity color color9001
Router(config-rpl)# pass
Router(config-rpl)#end-policy

Router(config)#route-policy for9002
Router(config-rpl)#set extcommunity color color9002
Router(config-rpl)#pass
Router(config-rpl)#end-policy
Router(config)#commit


Router#configure
Router(config)#route-policy add_path
Router(config-rpl)#set path-selection backup 1 install multipath-protect advertise
multipath-protect-advertise
Router(config-rpl)#end-policy

Router(config)#route-policy pass-all
Router(config-rpl)#pass
Router(config-rpl)#end-policy
Router(config)#commit
```

Configure SR policy on the egress PE router:

```
Router#configure
Router(config)#segment-routing
Router(config-sr)#traffic-eng
Router(config-sr-te)#segment-list SL201
Router(config-sr-te-sl)#index 1 mpls label 25000
Router(config-sr-te-sl)#policy POLICY_9001
Router(config-sr-te-policy)#binding-sid mpls 47700
```

```
Router(config-sr-te-policy)#color 9001 end-point ipv6 ::
Router(config-sr-te-policy)#candidate-paths
Router(config-sr-te-policy-path)#preference 10
Router(config-sr-te-policy-path-pref)#explicit segment-list SL201
Router(config-sr-te-sl)#policy POLICY_9002
Router(config-sr-te-policy)#binding-sid mpls 47701
Router(config-sr-te-policy)#color 9002 end-point ipv6 ::
Router(config-sr-te-policy)#candidate-paths
Router(config-sr-te-policy-path)#preference 10
Router(config-sr-te-policy-path-pref)#explicit segment-list SL201
Router(config-sr-te-policy-path-pref)#commit
```

Configure BGP on the Egress PE router:

```
Router(config)#router bgp 100
Router(config-bgp)#nsr
Router(config-bgp)#bgp router-id 10.1.1.2
Router(config-bgp)#bgp best-path sr-policy force
Router(config-bgp)#address-family ipv6 unicast
Router(config-bgp-af)#maximum-paths eibgp 25
Router(config-bgp-af)#additional-paths receive
Router(config-bgp-af)#additional-paths send
Router(config-bgp-af)#additional-paths selection route-policy add_path
Router(config-bgp-af)#redistribute connected
Router(config-bgp-af)#redistribute static
Router(config-bgp-af)#allocate-label all
Router(config-bgp-af)#commit
Router(config-bgp-af)#exit
Router(config-bgp)#neighbor 31::2
Router(config-bgp-nbr)#remote-as 2
Router(config-bgp-nbr)#address-family ipv6 unicast
Router(config-bgp-nbr-af)#route-policy for9001 in
Router(config-bgp-nbr-af)#route-policy pass-all out
Router(config-bgp-nbr-af)#commit
Router(config-bgp-nbr-af)#exit
Router(config-bgp)#neighbor 32::2
Router(config-bgp-nbr)#remote-as 2
Router(config-bgp-nbr)#address-family ipv6 unicast
Router(config-bgp-nbr-af)#route-policy for9002 in
Router(config-bgp-nbr-af)#route-policy pass-all out
Router(config-bgp-nbr-af)#commit
```

### Verification

The following show output shows that when the **force** option is enabled, the configured SR policy path is selected as the best path instead of the default best path.

```
Router#show bgp ipv6 unicast 2001:DB8::1 brief
Status codes: s suppressed, d damped, h history, * valid, > best
              i - internal, r RIB-failure, S stale, N Nexthop-discard
Origin codes: i - IGP, e - EGP, ? - incomplete
   Network            Next Hop            Metric LocPrf Weight Path
* 2001:DB8::1         10:1:1::55                     100      0 2 i
* i                   10:1:1::55                     100      0 2 i

*                     30::2                                   0 2 I
*>                    31::2 C:9001                            0 2 I
*                     32::2 C:9002                            0 2 I
Router#
```

Use the following command to compare the best paths:

```
Router#show bgp ipv6 unicast 2001:DB8::1 bestpath-compare
BGP routing table entry for 2001:DB8::1
Versions:
  Process           bRIB/RIB  SendTblVer
  Speaker               7641        7641
    Flags: 0x240232b2+0x20050000; multipath; backup available;
Last Modified: Dec  7 03:43:57.200 for 00:34:48
Paths: (24 available, best #4)
  Advertised IPv6 Unicast paths to update-groups (with more than one peer):
    0.3 0.4
  Advertised IPv6 Unicast paths to peers (in unique update groups):
    10.1.1.55
  Path #1: Received by speaker 0
  Flags: 0x2000000000020005, import: 0x20
  Flags2: 0x00
  Not advertised to any peer
  2
    10:1:1::55 (metric 30) from 10.1.1.55 (10.1.1.55), if-handle 0x00000000
      Origin IGP, localpref 100, valid, internal
      Received Path ID 1, Local Path ID 0, version 0
      Extended community: Color[CO-Flag]:8001[01]
      Non SR-policy path is ignored due to config knob
  Path #2: Received by speaker 0
  Flags: 0x2000000000020005, import: 0x20
  Flags2: 0x00
  Not advertised to any peer
  2
    10:1:1::55 (metric 30) from 10.1.1.55 (10.1.1.55), if-handle 0x00000000
      Origin IGP, localpref 100, valid, internal
      Received Path ID 3, Local Path ID 0, version 0
      Extended community: Color[CO-Flag]:8002[01]
      Non SR-policy path is ignored due to config knob
  Path #3: Received by speaker 0
  Flags: 0x3000000000060001, import: 0x20
  Flags2: 0x00
  Advertised IPv6 Unicast paths to update-groups (with more than one peer):
    0.4
  Advertised IPv6 Unicast paths to peers (in unique update groups):
    10.1.1.55
  2
    30::2 from 30::2 (198.51.100.1), if-handle 0x00000000
      Origin IGP, localpref 100, weight 65534, valid, external, backup, add-path
      Received Path ID 0, Local Path ID 2, version 7641
      Origin-AS validity: (disabled)
      Non SR-policy path is ignored due to config knob
  Path #4: Received by speaker 0
  Flags: 0xb000000001070001, import: 0x20
  Flags2: 0x00
  Advertised IPv6 Unicast paths to update-groups (with more than one peer):
    0.3 0.4
  Advertised IPv6 Unicast paths to peers (in unique update groups):
    10.1.1.55
  2
    31::2 C:9001 (bsid:48900) from 31::2 (198.51.100.2), if-handle 0x00000000
      Origin IGP, localpref 100, valid, external, best, group-best, multipath
      Received Path ID 0, Local Path ID 1, version 7641
      Extended community: Color[CO-Flag]:9001[01]
      Origin-AS validity: (disabled)
      SR policy color 9001, ipv6 null endpoint, up, not-registered, bsid 48900

      best of AS 2, Overall best
  Path #5: Received by speaker 0
  Flags: 0xb000000000030001, import: 0x20
```

```
  Flags2: 0x00
  Not advertised to any peer
  2
    32::2 C:9002 (bsid:48901) from 32::2 (198.51.100.3), if-handle 0x00000000
      Origin IGP, localpref 100, valid, external, multipath
      Received Path ID 0, Local Path ID 0, version 0
      Extended community: Color[CO-Flag]:9002[01]
      Origin-AS validity: (disabled)
      SR policy color 9002, up, not-registered, bsid 48901
      Higher router ID than best path (path #4)
```

Use the **show bgp process** command to verify which mode is enabled.

In the following example, you see that the **force** mode is enabled.

```
Router#show bgp process
BGP Process Information:
BGP is operating in STANDALONE mode
Autonomous System number format: ASPLAIN
Autonomous System: 100
Router ID: 10.1.1.2 (manually configured)
Default Cluster ID: 10.1.1.2
Active Cluster IDs:  10.1.1.2
Fast external fallover enabled
Platform Loadbalance paths max: 64
Platform RLIMIT max: 8589934592 bytes
Maximum limit for BMP buffer size: 1638 MB
Default value for BMP buffer size: 1228 MB
Current limit for BMP buffer size: 1228 MB
Current utilization of BMP buffer limit: 0 B
Neighbor logging is enabled
Enforce first AS enabled
Use SR-Policy admin/metric of color-extcomm Nexthop during path comparison: disabled
SR policy path force is enabled
Default local preference: 100
Default keepalive: 60
Non-stop routing is enabled
Slow peer detection enabled
ExtComm Color Nexthop validation: RIB

Update delay: 120
Generic scan interval: 60
Configured Segment-routing Local Block: [0, 0]
In use Segment-routing Local Block: [15000, 15999]
Platform support mix of sr-policy and native nexthop: Yes

Address family: IPv4 Unicast
Dampening is not enabled
Client reflection is enabled in global config
Dynamic MED is Disabled
Dynamic MED interval : 10 minutes
Dynamic MED Timer : Not Running
Dynamic MED Periodic Timer : Not Running
Scan interval: 60
Total prefixes scanned: 33
Prefixes scanned per segment: 100000
Number of scan segments: 1
Nexthop resolution minimum prefix-length: 0 (not configured)
IPv6 Nexthop resolution minimum prefix-length: 0 (not configured)
Main Table Version: 12642
Table version synced to RIB: 12642
Table version acked by RIB: 12642
IGP notification: IGPs notified
RIB has converged: version 2
```

```
RIB table prefix-limit reached ?  [No], version 0
Permanent Network Unconfigured

Node                Process     Nbrs Estb Rst Upd-Rcvd Upd-Sent Nfn-Rcv Nfn-Snt
node0_RSP1_CPU0     Speaker       53    3   2      316      823       0      53
```

CHAPTER 11

# Configure SR-TE Policies

This module provides information about segment routing for traffic engineering (SR-TE) policies, how to configure SR-TE policies, and how to steer traffic into an SR-TE policy.


- SR-TE Policy Overview, on page 275
- Usage Guidelines and Limitations, on page 276
- Instantiation of an SR Policy, on page 276
- SR-TE Policy Path Types, on page 318
- Protocols, on page 334
- Traffic Steering, on page 346
- Miscellaneous, on page 365


## SR-TE Policy Overview

Segment routing for traffic engineering (SR-TE) uses a “policy” to steer traffic through the network. An SR-TE policy path is expressed as a list of segments that specifies the path, called a segment ID (SID) list. Each segment is an end-to-end path from the source to the destination, and instructs the routers in the network to follow the specified path instead of following the shortest path calculated by the IGP. If a packet is steered into an SR-TE policy, the SID list is pushed on the packet by the head-end. The rest of the network executes the instructions embedded in the SID list.

An SR-TE policy is identified as an ordered list (head-end, color, end-point):

- Head-end – Where the SR-TE policy is instantiated
- Color – A numerical value that distinguishes between two or more policies to the same node pairs (Head-end – End point)
- End-point – The destination of the SR-TE policy

Every SR-TE policy has a color value. Every policy between the same node pairs requires a unique color value.

An SR-TE policy uses one or more candidate paths. A candidate path is a single segment list (SID-list) or a set of weighted SID-lists (for weighted equal cost multi-path [WECMP]). A candidate path is either dynamic or explicit. See *SR-TE Policy Path Types* section for more information.

*Table 34: Feature History Table*

| Feature Name | Release Information | Feature Description |
|---|---|---|
| Deep hashing for payloads with large MPLS label stacks | Release 7.3.1 | Load balancing of non-IP traffic with large label stacks (such as L2VPN with FAT over SR-TE) is enhanced. With this enhancement, ECMP/bundle hashing is performed on the innermost 3 labels for load balancing, up to the 9th label. This results in the FAT flow label being utilized in the hash calculation for L2VPN traffic with deep label stacks. Prior to the 7.3.1 release, only labels up to the 5th were utilized. |

# Usage Guidelines and Limitations

Observe the following guidelines and limitations for the platform.

- Broadcast links are not supported, configure IGP's interface as P2P (point-to-point).
- The ECMP path-set of an IGP route with a mix of SR-TE Policy paths (Autoroute Include) and unprotected native paths is supported.
- The ECMP path-set of an IGP route with a mix of SR-TE Policy paths (Autoroute Include) and protected (LFA/TI-LFA) native paths is not supported.
- Before configuring SR-TE policies, use the **distribute link-state** command under IS-IS or OSPF to distribute the link-state database to external services.
- L3VPN BGP PIC over SR-TE is supported.

  BGP PIC over SR-TE is supported when primary and backup paths are of the same or different resolution types. For example, when a primary path resolves into the BSID of an SR policy, the backup path could point to either another BSID or to a native LSP. For information about BGP PIC, refer to the Implementing BGP chapter in the *Routing Configuration Guide for Cisco ASR 9000 Series Routers*.
- GRE tunnel as primary interface for an SR policy is not supported.
- GRE tunnel as backup interface for an SR policy with TI-LFA protection is not supported.
- Head-end computed inter-domain SR policy with Flex Algo constraint and IGP redistribution is not supported. This is supported with Flex Algo-aware path computation at SR-PCE, with or without IGP redistribution. See SR-PCE Flexible Algorithm Multi-Domain Path Computation, on page 481.
- Single-hop SR-TE Policy with pop operation forwards packet with incorrect ethertype when receiving labelled packets matching Binding SID, but works properly when plain IPv6 is sent.

# Instantiation of an SR Policy

An SR policy is instantiated, or implemented, at the head-end router.

The following sections provide details on the SR policy instantiation methods:

- On-Demand SR Policy – SR On-Demand Next-Hop , on page 277

• Manually Provisioned SR Policy, on page 313
• PCE-Initiated SR Policy, on page 313

# On-Demand SR Policy – SR On-Demand Next-Hop

Segment Routing On-Demand Next Hop (SR-ODN) allows a service head-end router to automatically instantiate an SR policy to a BGP next-hop when required (on-demand). Its key benefits include:

- **SLA-aware BGP service** – Provides per-destination steering behaviors where a prefix, a set of prefixes, or all prefixes from a service can be associated with a desired underlay SLA. The functionality applies equally to single-domain and multi-domain networks.
- **Simplicity** – No prior SR Policy configuration needs to be configured and maintained. Instead, operator simply configures a small set of common intent-based optimization templates throughout the network.
- **Scalability** – Device resources at the head-end router are used only when required, based on service or SLA connectivity needs.

The following example shows how SR-ODN works:

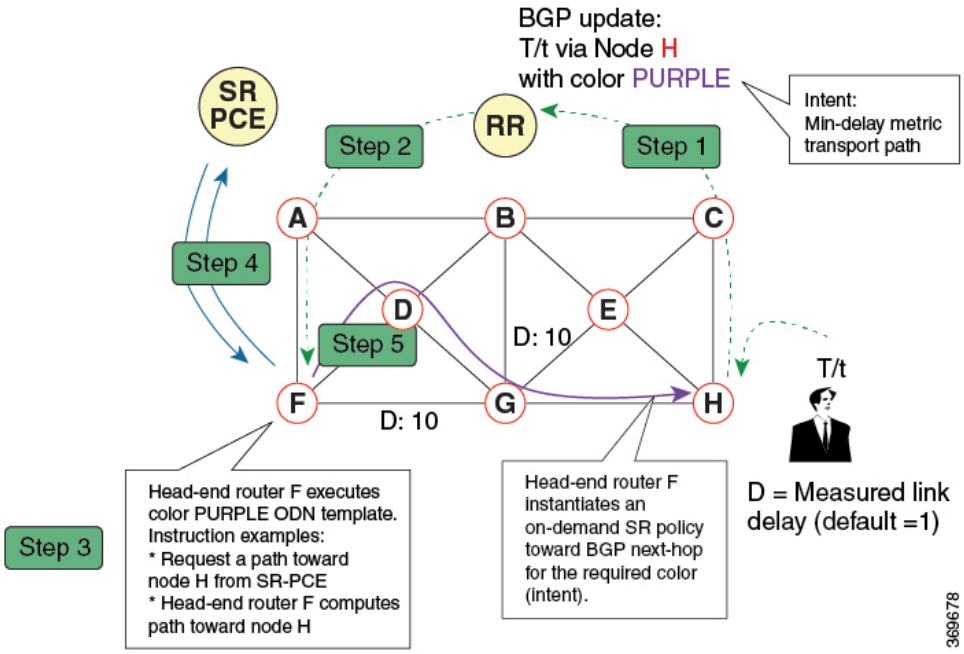


1. An egress PE (node H) advertises a BGP route for prefix T/t. This advertisement includes an SLA intent encoded with a BGP color extended community. In this example, the operator assigns color purple (example value = 100) to prefixes that should traverse the network over the delay-optimized path.
2. The route reflector receives the advertised route and advertises it to other PE nodes.
3. Ingress PEs in the network (such as node F) are pre-configured with an ODN template for color purple that provides the node with the steps to follow in case a route with the intended color appears, for example:
   - Contact SR-PCE and request computation for a path toward node H that does not share any nodes with another LSP in the same disjointness group.

- At the head-end router, compute a path towards node H that minimizes cumulative delay.

4. In this example, the head-end router contacts the SR-PCE and requests computation for a path toward node H that minimizes cumulative delay.
5. After SR-PCE provides the compute path, an intent-driven SR policy is instantiated at the head-end router. Other prefixes with the same intent (color) and destined to the same egress PE can share the same on-demand SR policy. When the last prefix associated with a given [intent, egress PE] pair is withdrawn, the on-demand SR policy is deleted, and resources are freed from the head-end router.

An on-demand SR policy is created dynamically for BGP global or VPN (service) routes. The following services are supported with SR-ODN:

- IPv4 BGP global routes
- IPv6 BGP global routes (6PE)
- VPNv4
- VPNv6 (6vPE)
- EVPN-VPWS (single-homing)
- EVPN-VPWS (multi-homing)
- EVPN (single-homing/multi-homing)

**Note** For EVPN single-homing, you must configure an EVPN Ethernet Segment Identifier (ESI) with a non-zero value.

**Note** Colored per-ESI/per-EVI EVPN Ethernet Auto-Discovery route (route-type 1) and Inclusive Multicast Route (route-type 3) are used to trigger instantiation of ODN SR-TE policies.

**Note** The following scenarios involving virtual Ethernet Segments (vES) are also supported with EVPN ODN:

- VPLS VFI as vES for single-active Multi-Homing to EVPN
- Active/backup Pseudo-wire (PW) as vES for Single-Homing to EVPN
- Static Pseudo-wire (PW) as vES for active-active Multi-Homing to EVPN

## SR-ODN/Automated Steering Support at ASBR for L3VPN Inter-AS Option B and L3VPN Inline Route Reflector

This feature augments support for SR-ODN and automated steering (AS) for the following scenarios:

- At ASBR nodes for L3VPN Inter-AS Option B

- At ABR nodes acting as L3VPN Inline Route Reflectors

With this feature, an ABR/ASBR node can trigger an on-demand SR policy used to steer traffic to remote colored destinations.

**Note** This feature is not supported when the Inter-AS Option B Per Next-Hop Label Allocation feature is enabled using the **label mode per-nexthop-received-label** command under the VPNv4 unicast address-family.

The below topology shows a network with different regions under a single BGP AS and with L3VPN services end-to-end. Nodes B and C are ABRs configured with BGP next-hop-self (NHS) for L3VPN. These ABRs program label cross connects for L3VPN destinations.

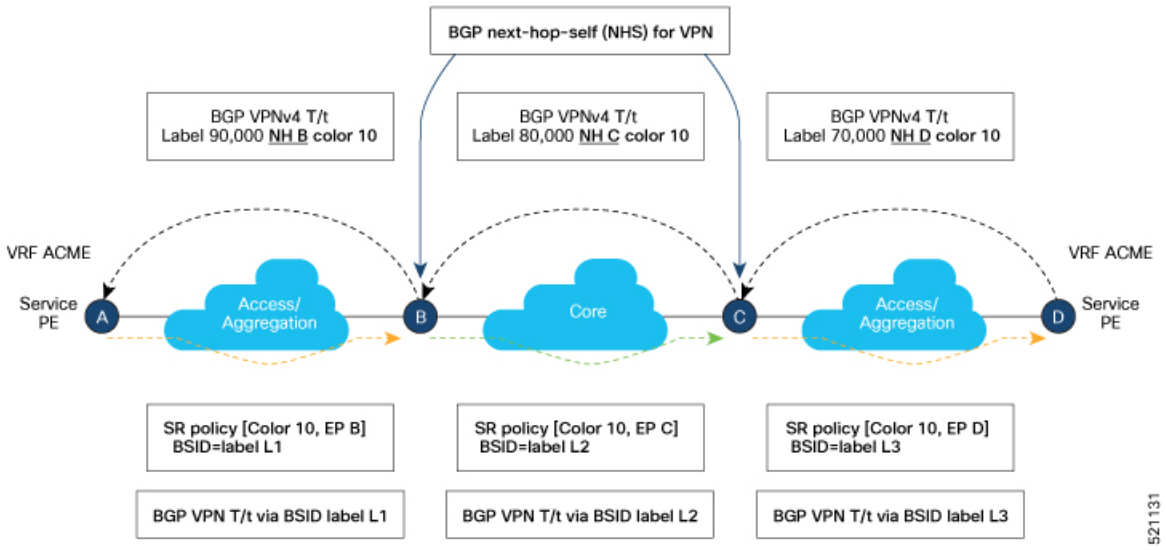


BGP advertises prefixes with SLA intent by attaching a color extended community. The objective is to steer traffic towards colored VPN prefixes with SR policies in *each* region. As shown in the figure, this feature allows ABR node B to steer traffic for remote BGP prefixes with color 10 over an SR policy with {color 10, end-point C}.

Similar behaviors apply at ASBR nodes for L3VPN Inter-AS Option B scenarios.

### Configuring SR-ODN/AS at L3VPN ABR/ASBR

See the SR-ODN Configuration Steps, on page 281 section for information about configuring the On-Demand Color Template.

### Example – SR-ODN/AS at ASBR for L3VPN Inter-AS Option B

The following example depicts an L3VPN Inter-AS Option B scenario with node B acting as ASBR. Node B steers traffic for remote BGP prefix T/t with color 10 over an on-demand SR policy with a path to node C minimizing the TE metric.

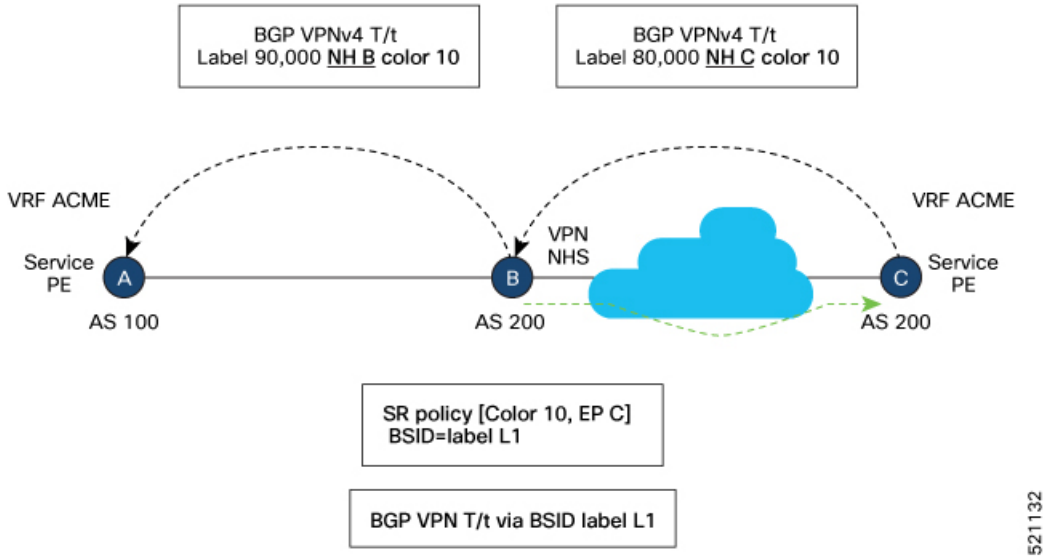


### Configuration on ASBR Node B

```
segment-routing
 traffic-eng
  on-demand color 10
   dynamic
    metric
     type te
    !
   !
  !
 !
!
router bgp 200
 address-family vpnv4 unicast
  retain route-target all
 !
 neighbor <neighbor_A>
  remote-as 100
  address-family vpnv4 unicast
   send-extended-community-ebgp
   route-policy pass-all in
   route-policy pass-all out
  !
 !
 neighbor <neighbor_C>
  remote-as 200
  address-family vpnv4 unicast
   update-source Loopback0
   next-hop-self
```

### Example - SR-ODN/AS at L3VPN ABR (BGP inline Route Reflector)

The following example depicts a scenario with node B acting as L3VPN BGP inline Route Reflector. Node B steers traffic for remote BGP prefix T/t with color 10 over an on-demand SR policy with a path to node C minimizing the delay metric.

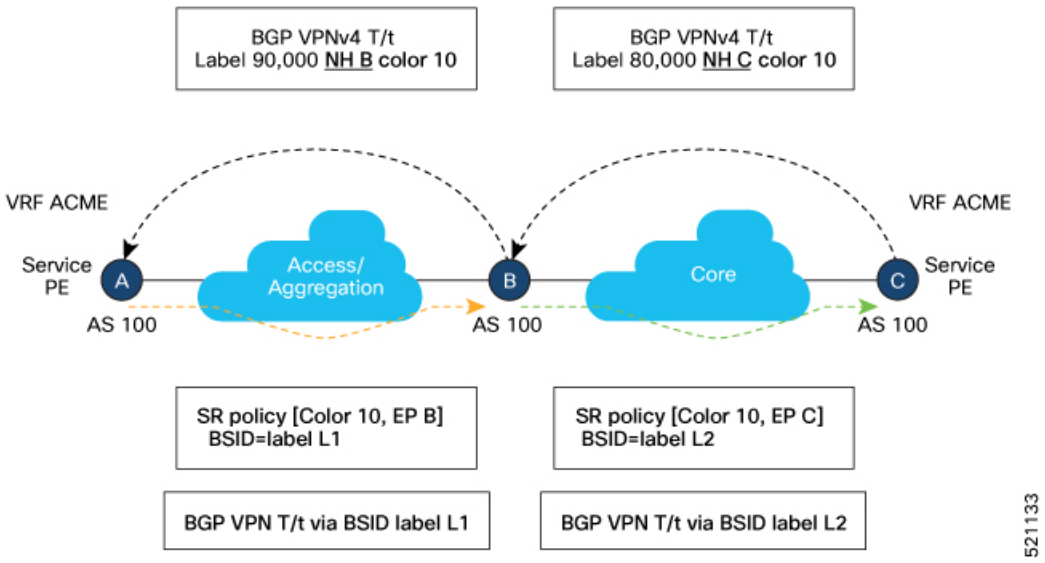


### Configuration on ASBR Node B

```
segment-routing
 traffic-eng
  on-demand color 10
   dynamic
    metric
     type latency
    !
   !
  !
 !
!
router bgp 100
 ibgp policy out enforce-modifications
 address-family vpnv4 unicast
 !
 neighbor <neighbor_C>
  remote-as 100
  address-family vpnv4 unicast
   update-source Loopback0
   route-reflector-client
   next-hop-self
  !
 !
 neighbor <neighbor_A>
  remote-as 100
  address-family vpnv4 unicast
   update-source Loopback0
   route-reflector-client
   next-hop-self
```

## SR-ODN Configuration Steps

To configure SR-ODN, complete the following configurations:

1. Define the SR-ODN template on the SR-TE head-end router.

   (Optional) If using Segment Routing Path Computation Element (SR-PCE) for path computation:

a. Configure SR-PCE. For detailed SR-PCE configuration information, see Configure SR-PCE, on page 475.

b. Configure the head-end router as Path Computation Element Protocol (PCEP) Path Computation Client (PCC). For detailed PCEP PCC configuration information, see Configure the Head-End Router as PCEP PCC.

2. Define BGP color extended communities. Refer to the "Implementing BGP" chapter in the *Routing Configuration Guide for Cisco ASR 9000 Series Routers*.

3. Define routing policies (using routing policy language [RPL]) to set BGP color extended communities. Refer to the "Implementing Routing Policy" chapter in the *Routing Configuration Guide for Cisco ASR 9000 Series Routers*.

   The following RPL attach-points for setting/matching BGP color extended communities are supported:

**Note** The following table shows the supported RPL match operations; however, routing policies are required primarily to set BGP color extended community. Matching based on BGP color extended communities is performed automatically by ODN's on-demand color template.

| Attach Point | Set | Match |
|---|---|---|
| VRF export | X | X |
| VRF import | – | X |
| EVI export | X | – |
| EVI import | X | X |
| Neighbor-in | X | X |
| Neighbor-out | X | X |
| Inter-AFI export | – | X |
| Inter-AFI import | – | X |
| Default-originate | X | – |

4. Apply routing policies to a service. Refer to the "Implementing Routing Policy" chapter in the *Routing Configuration Guide for Cisco ASR 9000 Series Routers*.

### Configure On-Demand Color Template

- Use the **on-demand color** *color* command to create an ODN template for the specified color value. The head-end router automatically follows the actions defined in the template upon arrival of BGP global or VPN routes with a BGP color extended community that matches the color value specified in the template.

  The *color* range is from 1 to 4294967295.

```
Router(config)# segment-routing traffic-eng
Router(config-sr-te)# on-demand color 10
```

**Note** Matching based on BGP color extended communities is performed automatically via ODN's on-demand color template. RPL routing policies are not required.

- Use the **on-demand color** *color* **dynamic** command to associate the template with on-demand SR policies with a locally computed dynamic path (by SR-TE head-end router utilizing its TE topology database) or centrally (by SR-PCE). The head-end router will first attempt to install the locally computed path; otherwise, it will use the path computed by the SR-PCE.

```
Router(config)# segment-routing traffic-eng
Router(config-sr-te)# on-demand color 10 dynamic
```

- Use the **on-demand color** *color* **dynamic pcep** command to indicate that only the path computed by SR-PCE should be associated with the on-demand SR policy. With this configuration, local path computation is not attempted; instead the head-end router will only instantiate the path computed by the SR-PCE.

```
Router(config-sr-te)# on-demand color 10 dynamic pcep
```

### Configure Dynamic Path Optimization Objectives

- Use the **metric type** {**igp** | **te** | **latency**} command to configure the metric for use in path computation.

```
Router(config-sr-te-color-dyn)# metric type te
```

- Use the **metric margin** {**absolute** *value*| **relative** *percent*} command to configure the On-Demand dynamic path metric margin. The range for *value* and *percent* is from 0 to 2147483647.

```
Router(config-sr-te-color-dyn)# metric margin absolute 5
```

### Configure Dynamic Path Constraints

- Use the **disjoint-path group-id** *group-id* **type** {**link** | **node** | **srlg** | **srlg-node**} [**sub-id** *sub-id*] command to configure the disjoint-path constraints. The *group-id* and *sub-id* range is from 1 to 65535.

```
Router(config-sr-te-color-dyn)# disjoint-path group-id 775 type link
```

- Use the **affinity** {**include-any** | **include-all** | **exclude-any**} {**name** *WORD*} command to configure the affinity constraints.

```
Router(config-sr-te-color-dyn)# affinity exclude-any name CROSS
```

- Use the **maximum-sid-depth** *value* command to customize the maximum SID depth (MSD) constraints advertised by the router.

  The default MSD *value* is equal to the maximum MSD supported by the platform (10).

```
Router(config-sr-te-color)# maximum-sid-depth 5
```

  See Customize MSD Value at PCC, on page 336 for information about SR-TE label imposition capabilities.

- Use the **constraints segments sid-algorithm** *algorithm-number* command to configure the SR Flexible Algorithm constraints. The *algorithm-number* range is from 128 to 255.

  ```
  Router(config-sr-te-color)# constraints segments sid-algorithm 128
  ```

- Use the **constraints segments protection** {**protected-only** | **protected-preferred** | **unprotected-only** | **unprotected-preferred**} command to configure the Adj-SID protection behavior constraints.

  ```
  Router(config-sr-te-color)# constraints segments protection protected-only
  ```

  See Segment Protection-Type Constraint, on page 322 for information about Adj-SID protection behavior.

# Configuring SR-ODN: Examples

## Configuring SR-ODN: Layer-3 Services Examples

The following examples show end-to-end configurations used in implementing SR-ODN on the head-end router.

### Configuring ODN Color Templates: Example

Configure ODN color templates on routers acting as SR-TE head-end nodes. The following example shows various ODN color templates:

- color 10: minimization objective = te-metric
- color 20: minimization objective = igp-metric
- color 21: minimization objective = igp-metric; constraints = affinity
- color 22: minimization objective = te-metric; path computation at SR-PCE; constraints = affinity
- color 30: minimization objective = delay-metric
- color 128: constraints = flex-algo

```
segment-routing
 traffic-eng
  on-demand color 10
   dynamic
    metric
     type te
    !
   !
  !
  on-demand color 20
   dynamic
    metric
     type igp
    !
   !
  !
  on-demand color 21
   dynamic
    metric
     type igp
    !
    affinity exclude-any
     name CROSS
```

```
    !
   !
  !
  on-demand color 22
   dynamic
    pcep
    !
    metric
     type te
    !
    affinity exclude-any
     name CROSS
    !
   !
  !
  on-demand color 30
   dynamic
    metric
     type latency
    !
   !
  !
  on-demand color 128
   constraints
    segments
     sid-algorithm 128
   !
  !
!
end
```

### Configuring BGP Color Extended Community Set: Example

The following example shows how to configure BGP color extended communities that are later applied to BGP service routes via route-policies.

**Note** In most common scenarios, egress PE routers that advertise BGP service routes apply (set) BGP color extended communities. However, color can also be set at the ingress PE router.

```
extcommunity-set opaque color10-te
  10
end-set
!
extcommunity-set opaque color20-igp
  20
end-set
!
extcommunity-set opaque color21-igp-excl-cross
  21
end-set
!
extcommunity-set opaque color30-delay
  30
end-set
!
extcommunity-set opaque color128-fa128
  128
end-set
!
```

### Configuring RPL to Set BGP Color (Layer-3 Services): Examples

The following example shows various representative RPL definitions that set BGP color community.

The first 4 RPL examples include the set color action only. The last RPL example performs the set color action for selected destinations based on a prefix-set.

```
route-policy SET_COLOR_LOW_LATENCY_TE
  set extcommunity color color10-te
  pass
end-policy
!
route-policy SET_COLOR_HI_BW
  set extcommunity color color20-igp
  pass
end-policy
!
route-policy SET_COLOR_LOW_LATENCY
  set extcommunity color color30-delay
  pass
end-policy
!
route-policy SET_COLOR_FA_128
  set extcommunity color color128-fa128
  pass
end-policy
!

prefix-set sample-set
  88.1.0.0/24
end-set
!
route-policy SET_COLOR_GLOBAL
  if destination in sample-set then
    set extcommunity color color10-te
  else
    pass
  endif
end-policy
```

### Applying RPL to BGP Services (Layer-3 Services): Example

The following example shows various RPLs that set BGP color community being applied to BGP Layer-3 VPN services (VPNv4/VPNv6) and BGP global.

- The L3VPN examples show the RPL applied at the VRF export attach-point.
- The BGP global example shows the RPL applied at the BGP neighbor-out attach-point.

```
vrf vrf_cust1
 address-family ipv4 unicast
  export route-policy SET_COLOR_LOW_LATENCY_TE
 !
 address-family ipv6 unicast
  export route-policy SET_COLOR_LOW_LATENCY_TE
 !
!
vrf vrf_cust2
 address-family ipv4 unicast
  export route-policy SET_COLOR_HI_BW
 !
 address-family ipv6 unicast
  export route-policy SET_COLOR_HI_BW
```

```
 !
!
vrf vrf_cust3
 address-family ipv4 unicast
  export route-policy SET_COLOR_LOW_LATENCY
 !
 address-family ipv6 unicast
  export route-policy SET_COLOR_LOW_LATENCY
 !
!

vrf vrf_cust4
 address-family ipv4 unicast
  export route-policy SET_COLOR_FA_128
 !
 address-family ipv6 unicast
  export route-policy SET_COLOR_FA_128
 !
!
router bgp 100
 neighbor-group BR-TO-RR
  address-family ipv4 unicast
   route-policy SET_COLOR_GLOBAL out
  !
 !
!
end
```

### Verifying BGP VRF Information

Use the **show bgp vrf** command to display BGP prefix information for VRF instances. The following output shows the BGP VRF table including a prefix (88.1.1.0/24) with color 10 advertised by router 10.1.1.8.

```
RP/0/RP0/CPU0:R4# show bgp vrf vrf_cust1

BGP VRF vrf_cust1, state: Active
BGP Route Distinguisher: 10.1.1.4:101
VRF ID: 0x60000007
BGP router identifier 10.1.1.4, local AS number 100
Non-stop routing is enabled
BGP table state: Active
Table ID: 0xe0000007   RD version: 282
BGP main routing table version 287
BGP NSR Initial initsync version 31 (Reached)
BGP NSR/ISSU Sync-Group versions 0/0

Status codes: s suppressed, d damped, h history, * valid, > best
              i - internal, r RIB-failure, S stale, N Nexthop-discard
Origin codes: i - IGP, e - EGP, ? - incomplete
   Network            Next Hop            Metric LocPrf Weight Path
Route Distinguisher: 10.1.1.4:101 (default for vrf vrf_cust1)
*> 44.1.1.0/24        40.4.101.11                              0 400 {1} i
*>i55.1.1.0/24        10.1.1.5                     100         0 500 {1} i
*>i88.1.1.0/24        10.1.1.8 C:10                100         0 800 {1} i
*>i99.1.1.0/24        10.1.1.9                     100         0 800 {1} i

Processed 4 prefixes, 4 paths
```

The following output displays the details for prefix 88.1.1.0/24. Note the presence of BGP extended color community 10, and that the prefix is associated with an SR policy with color 10 and BSID value of 24036.

```
RP/0/RP0/CPU0:R4# show bgp vrf vrf_cust1 88.1.1.0/24
```

```
BGP routing table entry for 88.1.1.0/24, Route Distinguisher: 10.1.1.4:101
Versions:
  Process           bRIB/RIB  SendTblVer
  Speaker                282         282
Last Modified: May 20 09:23:34.112 for 00:06:03
Paths: (1 available, best #1)
  Advertised to CE peers (in unique update groups):
    40.4.101.11
  Path #1: Received by speaker 0
  Advertised to CE peers (in unique update groups):
    40.4.101.11
  800 {1}
    10.1.1.8 C:10 (bsid:24036) (metric 20) from 10.1.1.55 (10.1.1.8)
      Received Label 24012
      Origin IGP, localpref 100, valid, internal, best, group-best, import-candidate,
imported
      Received Path ID 0, Local Path ID 1, version 273
      Extended community: Color:10 RT:100:1
      Originator: 10.1.1.8, Cluster list: 10.1.1.55
      SR policy color 10, up, registered, bsid 24036, if-handle 0x08000024

     Source AFI: VPNv4 Unicast, Source VRF: default, Source Route Distinguisher: 10.1.1.8:101
```

### Verifying Forwarding (CEF) Table

Use the **show cef vrf** command to display the contents of the CEF table for the VRF instance. Note that prefix 88.1.1.0/24 points to the BSID label corresponding to an SR policy. Other non-colored prefixes, such as 55.1.1.0/24, point to BGP next-hop.

```
RP/0/RP0/CPU0:R4# show cef vrf vrf_cust1

Prefix              Next Hop            Interface
------------------- ------------------- ------------------
0.0.0.0/0           drop                default handler
0.0.0.0/32          broadcast
40.4.101.0/24       attached            TenGigE0/0/0/0.101
40.4.101.0/32       broadcast           TenGigE0/0/0/0.101
40.4.101.4/32       receive             TenGigE0/0/0/0.101
40.4.101.11/32      40.4.101.11/32      TenGigE0/0/0/0.101
40.4.101.255/32     broadcast           TenGigE0/0/0/0.101
44.1.1.0/24         40.4.101.11/32      <recursive>
55.1.1.0/24         10.1.1.5/32         <recursive>
88.1.1.0/24         24036 (via-label)   <recursive>
99.1.1.0/24         10.1.1.9/32         <recursive>
224.0.0.0/4         0.0.0.0/32
224.0.0.0/24        receive
255.255.255.255/32  broadcast
```

The following output displays CEF details for prefix 88.1.1.0/24. Note that the prefix is associated with an SR policy with BSID value of 24036.

```
RP/0/RP0/CPU0:R4# show cef vrf vrf_cust1 88.1.1.0/24

88.1.1.0/24, version 51, internal 0x5000001 0x0 (ptr 0x98c60ddc) [1], 0x0 (0x0), 0x208
(0x98425268)
 Updated May 20 09:23:34.216
 Prefix Len 24, traffic index 0, precedence n/a, priority 3
   via local-label 24036, 5 dependencies, recursive [flags 0x6000]
    path-idx 0 NHID 0x0 [0x97091ec0 0x0]
    recursion-via-label
    next hop VRF - 'default', table - 0xe0000000
```

```
    next hop via 24036/0/21
     next hop srte_c_10_ep labels imposed {ImplNull 24012}
```

### Verifying SR Policy

Use the **show segment-routing traffic-eng policy** command to display SR policy information.

The following outputs show the details of an on-demand SR policy that was triggered by prefixes with color 10 advertised by node 10.1.1.8.

```
RP/0/RP0/CPU0:R4# show segment-routing traffic-eng policy color 10 tabular

 Color             Endpoint  Admin   Oper              Binding
                             State  State                 SID
------ -------------------- ------ ------ --------------------
    10              10.1.1.8    up     up                24036
```

The following outputs show the details of the on-demand SR policy for BSID 24036.

**Note** There are 2 candidate paths associated with this SR policy: the path that is computed by the head-end router (with preference 200), and the path that is computed by the SR-PCE (with preference 100). The candidate path with the highest preference is the active candidate path (highlighted below) and is installed in forwarding.

```
RP/0/RP0/CPU0:R4# show segment-routing traffic-eng policy binding-sid 24036

SR-TE policy database
---------------------

Color: 10, End-point: 10.1.1.8
  Name: srte_c_10_ep_10.1.1.8
  Status:
    Admin: up  Operational: up for 4d14h (since Jul  3 20:28:57.840)
  Candidate-paths:
    Preference: 200 (BGP ODN) (active)
      Requested BSID: dynamic
      PCC info:
        Symbolic name: bgp_c_10_ep_10.1.1.8_discr_200
        PLSP-ID: 12
      Dynamic (valid)
        Metric Type: TE,   Path Accumulated Metric: 30
            16009 [Prefix-SID, 10.1.1.9]
            16008 [Prefix-SID, 10.1.1.8]
    Preference: 100 (BGP ODN)
      Requested BSID: dynamic
      PCC info:
        Symbolic name: bgp_c_10_ep_10.1.1.8_discr_100
        PLSP-ID: 11
      Dynamic (pce 10.1.1.57) (valid)
        Metric Type: TE,   Path Accumulated Metric: 30
            16009 [Prefix-SID, 10.1.1.9]
            16008 [Prefix-SID, 10.1.1.8]
  Attributes:
    Binding SID: 24036
    Forward Class: 0
    Steering BGP disabled: no
    IPv6 caps enable: yes
```

### Verifying SR Policy Forwarding

Use the **show segment-routing traffic-eng forwarding policy** command to display the SR policy forwarding information.

The following outputs show the forwarding details for an on-demand SR policy that was triggered by prefixes with color 10 advertised by node 10.1.1.8.

```
RP/0/RP0/CPU0:R4# show segment-routing traffic-eng forwarding policy binding-sid 24036
tabular

Color Endpoint        Segment      Outgoing Outgoing     Next Hop     Bytes        Pure
                      List         Label    Interface                 Switched     Backup
----- --------------- ------------ -------- ------------ ------------ ------------ ------
10    10.1.1.8        dynamic      16009    Gi0/0/0/4    10.4.5.5     0
                                   16001    Gi0/0/0/5    11.4.8.8     0            Yes

RP/0/RP0/CPU0:R4# show segment-routing traffic-eng forwarding policy binding-sid 24036
detail
Mon Jul  8 11:56:46.887 PST

SR-TE Policy Forwarding database
--------------------------------

Color: 10, End-point: 10.1.1.8
  Name: srte_c_10_ep_10.1.1.8
  Binding SID: 24036
  Segment Lists:
    SL[0]:
      Name: dynamic
      Paths:
        Path[0]:
          Outgoing Label: 16009
          Outgoing Interface: GigabitEthernet0/0/0/4
          Next Hop: 10.4.5.5
          Switched Packets/Bytes: 0/0
          FRR Pure Backup: No
          Label Stack (Top -> Bottom): { 16009, 16008 }
          Path-id: 1 (Protected), Backup-path-id: 2, Weight: 64
        Path[1]:
          Outgoing Label: 16001
          Outgoing Interface: GigabitEthernet0/0/0/5
          Next Hop: 11.4.8.8
          Switched Packets/Bytes: 0/0
          FRR Pure Backup: Yes
          Label Stack (Top -> Bottom): { 16001, 16009, 16008 }
          Path-id: 2 (Pure-Backup), Weight: 64
  Policy Packets/Bytes Switched: 0/0
  Local label: 80013
```

## Configuring SR-ODN: EVPN Services Examples

### Configuring BGP Color Extended Community Set: Example

The following example shows how to configure BGP color extended communities that are later applied to BGP service routes via route-policies.

```
extcommunity-set opaque color-44
  44
end-set

extcommunity-set opaque color-55
```

```
  55
end-set

extcommunity-set opaque color-77
  77
end-set

extcommunity-set opaque color-88
  88
end-set
```

### Configuring RPL to Set BGP Color (EVPN Services): Examples

The following examples shows various representative RPL definitions that set BGP color community.

The following RPL examples match on EVPN route-types and then set the BGP color extended community.

```
route-policy sample-export-rpl
  if evpn-route-type is 1 then
    set extcommunity color color-44
  endif
  if evpn-route-type is 3 then
    set extcommunity color color-55
  endif
end-policy

route-policy sample-import-rpl
  if evpn-route-type is 1 then
    set extcommunity color color-77
  elseif evpn-route-type is 3 then
    set extcommunity color color-88
  else
    pass
  endif
end-policy
```

The following RPL example sets BGP color extended community while matching on the following:

- Route Distinguisher (RD)
- Ethernet Segment Identifier (ESI)
- Ethernet Tag (ETAG)
- EVPN route-types

```
route-policy sample-bgpneighbor-rpl
  if rd in (10.1.1.1:3504) then
    set extcommunity color color3504
  elseif rd in (10.1.1.1:3505) then
    set extcommunity color color3505
  elseif rd in (10.1.1.1:3506) then
    set extcommunity color color99996
  elseif esi in (0010.0000.0000.0000.1201) and rd in (10.1.1.1:3508) then
    set extcommunity color color3508
  elseif etag in (30509) and rd in (10.1.1.1:3509) then
    set extcommunity color color3509
  elseif etag in (0) and rd in (10.1.1.1:2001) and evpn-route-type is 1 then
    set extcommunity color color82001
  elseif etag in (0) and rd in (10.1.1.1:2001) and evpn-route-type is 3 then
    set extcommunity color color92001
endif
  pass
end-policy
```

### Applying RPL to BGP Services (EVPN Services): Example

The following examples show various RPLs that set BGP color community being applied to EVPN services.

The following 2 examples show the RPL applied at the EVI export and import attach-points.

**Note** RPLs applied under EVI import or export attach-point also support matching on the following:

- Ethernet Segment Identifier (ESI)
- Ethernet Tag (ETAG)
- EVPN-Originator

```
evpn
 evi 101
  bgp
   route-target 101:1
   route-target import 100:1
   route-target export 101:1
   route-policy import sample-import-rpl
  !
  advertise-mac
  !
 !
 evi 102
  bgp
   route-target 102:1
   route-target import 100:2
   route-target export 102:1
   route-policy export sample-export-rpl
  !
  advertise-mac
  !
 !
!
```

The following example shows the RPL applied at the BGP neighbor-out attach-point.

**Note** RPLs defined under BGP neighbor-out attach-point also support matching on the following:

- EVPN-Originator

```
router bgp 100
 bgp router-id 10.1.1.1
 address-family l2vpn evpn
 !
 neighbor-group evpn-rr
  remote-as 100
  update-source Loopback0
  address-family l2vpn evpn
  !
  neighbor 10.10.10.10
   use neighbor-group evpn-rr
   address-family l2vpn evpn
    route-policy sample-bgpneighbor-rpl out
```

## Configuring SR-ODN for EVPN-VPWS: Use Case

This use case shows how to set up a pair of ELINE services using EVPN-VPWS between two sites. Services are carried over SR policies that must not share any common links along their paths (link-disjoint). The SR policies are triggered on-demand based on ODN principles. An SR-PCE computes the disjoint paths.

This use case uses the following topology with 2 sites: Site 1 with nodes A and B, and Site 2 with nodes C and D.

*Figure 19: Topology for Use Case: SR-ODN for EVPN-VPWS*

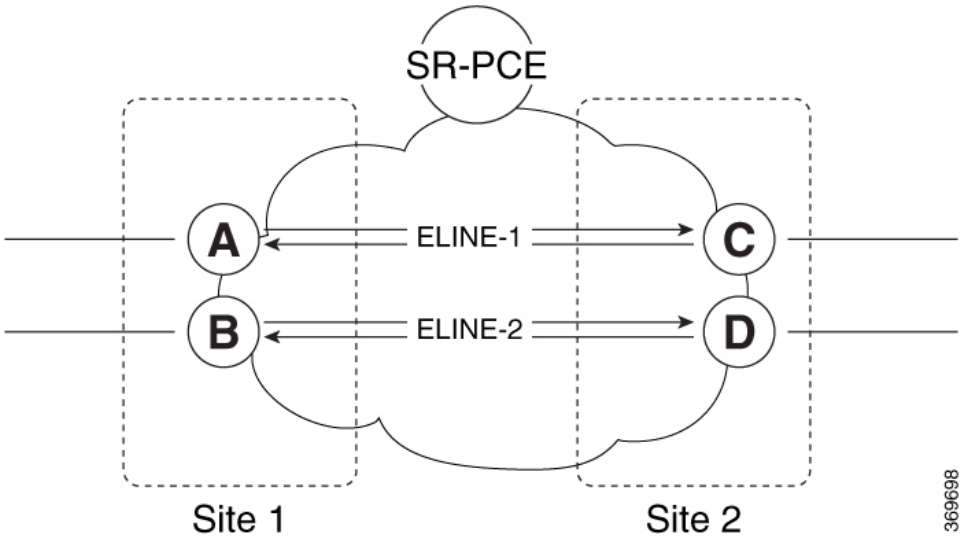


*Table 35: Use Case Parameters*

| | | |
|---|---|---|
| **IP Addresses of Loopback0 (Lo0) Interfaces** | SR-PCE Lo0: 10.1.1.207 | |
| | Site 1:<br>• Node A Lo0: 10.1.1.5<br>• Node B Lo0: 10.1.1.6 | Site 2:<br>• Node C Lo0: 10.1.1.2<br>• Node D Lo0: 10.1.1.4 |
| **EVPN-VPWS Service Parameters** | ELINE-1:<br>• EVPN-VPWS EVI 100<br>• Node A: AC-ID = 11<br>• Node C: AC-ID = 21 | ELINE-2:<br>• EVPN-VPWS EVI 101<br>• Node B: AC-ID = 12<br>• Node D: AC-ID = 22 |
| **ODN BGP Color Extended Communities** | Site 1 routers (Nodes A and B):<br>• set color 10000<br>• match color 11000 | Site 2 routers (Nodes C and D):<br>• set color 11000<br>• match color 10000 |
| **Note** These colors are associated with the EVPN route-type 1 routes of the EVPN-VPWS services. | | |

| | | |
|---|---|---|
| **PCEP LSP Disjoint-Path Association Group ID** | Site 1 to Site 2 LSPs (from Node A to Node C/from Node B to Node D):<br>• group-id = 775 | Site 2 to Site 1 LSPs (from Node C to Node A/from Node D to Node B):<br>• group-id = 776 |

The use case provides configuration and verification outputs for all devices.

| Configuration | Verification |
|---|---|
| Configuration: SR-PCE, on page 294 | Verification: SR-PCE, on page 298 |
| Configuration: Site 1 Node A, on page 294 | Verification: Site 1 Node A, on page 302 |
| Configuration: Site 1 Node B, on page 295 | Verification: Site 1 Node B, on page 305 |
| Configuration: Site 2 Node C, on page 296 | Verification: Site 2 Node C, on page 308 |
| Configuration: Site 2 Node D, on page 297 | Verification: Site 2 Node D, on page 310 |

### Configuration: SR-PCE

For cases when PCC nodes support, or signal, PCEP association-group object to indicate the pair of LSPs in a disjoint set, there is no extra configuration required at the SR-PCE to trigger disjoint-path computation.

**Note** SR-PCE also supports disjoint-path computation for cases when PCC nodes do not support PCEP association-group object. See Configure the Disjoint Policy (Optional), on page 478 for more information.

### Configuration: Site 1 Node A

This section depicts relevant configuration of Node A at Site 1. It includes service configuration, BGP color extended community, and RPL. It also includes the corresponding ODN template required to achieve the disjointness SLA.

Nodes in Site 1 are configured to set color 10000 on originating EVPN routes, while matching color 11000 on incoming EVPN routes from routers located at Site 2.

Since both nodes in Site 1 request path computation from SR-PCE using the same disjoint-path group-id (775), the PCE will attempt to compute disjointness for the pair of LSPs originating from Site 1 toward Site 2.

```
/* EVPN-VPWS configuration */

interface GigabitEthernet0/0/0/3.2500 l2transport
 encapsulation dot1q 2500
 rewrite ingress tag pop 1 symmetric
!
l2vpn
 xconnect group evpn_vpws_group
  p2p evpn_vpws_100
   interface GigabitEthernet0/0/0/3.2500
   neighbor evpn evi 100 target 21 source 11
   !
  !
 !
```

```
!

/* BGP color community and RPL configuration */

extcommunity-set opaque color-10000
  10000
end-set
!
route-policy SET_COLOR_EVPN_VPWS
  if evpn-route-type is 1 and rd in (ios-regex '.*..*..*..*:(100)') then
    set extcommunity color color-10000
  endif
  pass
end-policy
!
router bgp 65000
 neighbor 10.1.1.253
  address-family l2vpn evpn
   route-policy SET_COLOR_EVPN_VPWS out
  !
 !
!

/* ODN template configuration */

segment-routing
 traffic-eng
  on-demand color 11000
   dynamic
    pcep
    !
    metric
     type igp
    !
    disjoint-path group-id 775 type link
   !
  !
 !
!
```

### Configuration: Site 1 Node B

This section depicts relevant configuration of Node B at Site 1.

```
/* EVPN-VPWS configuration */

interface TenGigE0/3/0/0/8.2500 l2transport
 encapsulation dot1q 2500
 rewrite ingress tag pop 1 symmetric
!
l2vpn
 xconnect group evpn_vpws_group
  p2p evpn_vpws_101
   interface TenGigE0/3/0/0/8.2500
   neighbor evpn evi 101 target 22 source 12
   !
  !
 !
!

/* BGP color community and RPL configuration */

extcommunity-set opaque color-10000
  10000
```

```
end-set
!
route-policy SET_COLOR_EVPN_VPWS
  if evpn-route-type is 1 and rd in (ios-regex '.*..*..*..*:(101)') then
    set extcommunity color color-10000
  endif
  pass
end-policy
!
router bgp 65000
 neighbor 10.1.1.253
  address-family l2vpn evpn
   route-policy SET_COLOR_EVPN_VPWS out
  !
 !
!

/* ODN template configuration */

segment-routing
 traffic-eng
  on-demand color 11000
   dynamic
    pcep
    !
    metric
     type igp
    !
    disjoint-path group-id 775 type link
   !
  !
 !
!
```

### Configuration: Site 2 Node C

This section depicts relevant configuration of Node C at Site 2. It includes service configuration, BGP color extended community, and RPL. It also includes the corresponding ODN template required to achieve the disjointness SLA.

Nodes in Site 2 are configured to set color 11000 on originating EVPN routes, while matching color 10000 on incoming EVPN routes from routers located at Site 1.

Since both nodes on Site 2 request path computation from SR-PCE using the same disjoint-path group-id (776), the PCE will attempt to compute disjointness for the pair of LSPs originating from Site 2 toward Site 1.

```
/* EVPN-VPWS configuration */

interface GigabitEthernet0/0/0/3.2500 l2transport
 encapsulation dot1q 2500
 rewrite ingress tag pop 1 symmetric
!
l2vpn
 xconnect group evpn_vpws_group
  p2p evpn_vpws_100
   interface GigabitEthernet0/0/0/3.2500
   neighbor evpn evi 100 target 11 source 21
   !
  !
 !
!
```

```
/* BGP color community and RPL configuration */

extcommunity-set opaque color-11000
  11000
end-set
!
route-policy SET_COLOR_EVPN_VPWS
  if evpn-route-type is 1 and rd in (ios-regex '.*..*..*..*:(100)') then
    set extcommunity color color-11000
  endif
  pass
end-policy
!
router bgp 65000
 neighbor 10.1.1.253
  address-family l2vpn evpn
   route-policy SET_COLOR_EVPN_VPWS out
  !
 !
!

/* ODN template configuration */

segment-routing
 traffic-eng
  on-demand color 10000
   dynamic
    pcep
    !
    metric
     type igp
    !
    disjoint-path group-id 776 type link
   !
  !
 !
!
```

### Configuration: Site 2 Node D

This section depicts relevant configuration of Node D at Site 2.

```
/* EVPN-VPWS configuration */

interface GigabitEthernet0/0/0/1.2500 l2transport
 encapsulation dot1q 2500
 rewrite ingress tag pop 1 symmetric
!
l2vpn
 xconnect group evpn_vpws_group
  p2p evpn_vpws_101
   interface GigabitEthernet0/0/0/1.2500
   neighbor evpn evi 101 target 12 source 22
   !
  !
 !
!

/* BGP color community and RPL configuration */

extcommunity-set opaque color-11000
  11000
end-set
!
```

```
route-policy SET_COLOR_EVPN_VPWS
  if evpn-route-type is 1 and rd in (ios-regex '.*..*..*..*:(101)') then
    set extcommunity color color-11000
  endif
  pass
end-policy
!
router bgp 65000
 neighbor 10.1.1.253
  address-family l2vpn evpn
   route-policy SET_COLOR_EVPN_VPWS out
  !
 !
!

/* ODN template configuration */

segment-routing
 traffic-eng
  on-demand color 10000
   dynamic
    pcep
    !
    metric
     type igp
    !
    disjoint-path group-id 776 type link
   !
  !
 !
!
```

### Verification: SR-PCE

Use the **show pce ipv4 peer** command to display the SR-PCE's PCEP peers and session status. SR-PCE performs path computation for the 4 nodes depicted in the use-case.

```
RP/0/0/CPU0:SR-PCE# show pce ipv4 peer
Mon Jul 15 19:41:43.622 UTC

PCE's peer database:
--------------------
Peer address: 10.1.1.2
  State: Up
  Capabilities: Stateful, Segment-Routing, Update, Instantiation

Peer address: 10.1.1.4
  State: Up
  Capabilities: Stateful, Segment-Routing, Update, Instantiation

Peer address: 10.1.1.5
  State: Up
  Capabilities: Stateful, Segment-Routing, Update, Instantiation

Peer address: 10.1.1.6
  State: Up
  Capabilities: Stateful, Segment-Routing, Update, Instantiation
```

Use the **show pce association group-id** command to display information for the pair of LSPs assigned to a given association group-id value.

Based on the goals of this use case, SR-PCE computes link-disjoint paths for the SR policies associated with a pair of ELINE services between site 1 and site 2. In particular, disjoint LSPs from site 1 to site 2 are identified by association group-id 775. The output includes high-level information for LSPs associated to this group-id:

- At Node A (10.1.1.5): LSP symbolic name = bgp_c_11000_ep_10.1.1.2_discr_100
- At Node B (10.1.1.6): LSP symbolic name = bgp_c_11000_ep_10.1.1.4_discr_100

In this case, the SR-PCE was able to achieve the desired disjointness level; therefore the Status is shown as "Satisfied".

```
RP/0/0/CPU0:SR-PCE# show pce association group-id 775
Thu Jul 11 03:52:20.770 UTC

PCE's association database:
----------------------
Association: Type Link-Disjoint, Group 775, Not Strict
 Associated LSPs:
  LSP[0]:
   PCC 10.1.1.6, tunnel name bgp_c_11000_ep_10.1.1.4_discr_100,  PLSP ID 18, tunnel ID 17,
 LSP ID 3, Configured on PCC
  LSP[1]:
   PCC 10.1.1.5, tunnel name bgp_c_11000_ep_10.1.1.2_discr_100,  PLSP ID 18, tunnel ID 18,
 LSP ID 3, Configured on PCC
 Status: Satisfied
```

Use the **show pce lsp** command to display detailed information of an LSP present in the PCE's LSP database. This output shows details for the LSP at Node A (10.1.1.5) that is used to carry traffic of EVPN VPWS EVI 100 towards node C (10.1.1.2).

```
RP/0/0/CPU0:SR-PCE# show pce lsp pcc ipv4 10.1.1.5 name bgp_c_11000_ep_10.1.1.2_discr_100
Thu Jul 11 03:58:45.903 UTC

PCE's tunnel database:
----------------------
PCC 10.1.1.5:

Tunnel Name: bgp_c_11000_ep_10.1.1.2_discr_100
Color: 11000
Interface Name: srte_c_11000_ep_10.1.1.2
 LSPs:
  LSP[0]:
   source 10.1.1.5, destination 10.1.1.2, tunnel ID 18, LSP ID 3
   State: Admin up, Operation up
   Setup type: Segment Routing
   Binding SID: 80037
   Maximum SID Depth: 10
   Absolute Metric Margin: 0
   Relative Metric Margin: 0%
   Preference: 100
   Bandwidth: signaled 0 kbps, applied 0 kbps
   PCEP information:
     PLSP-ID 0x12, flags: D:1 S:0 R:0 A:1 O:1 C:0
   LSP Role: Exclude LSP
   State-sync PCE: None
   PCC: 10.1.1.5
   LSP is subdelegated to: None
   Reported path:
     Metric type: IGP, Accumulated Metric 40
      SID[0]: Adj, Label 80003, Address: local 11.5.8.5 remote 11.5.8.8
      SID[1]: Node, Label 16007, Address 10.1.1.7
      SID[2]: Node, Label 16002, Address 10.1.1.2
   Computed path: (Local PCE)
```

```
    Computed Time: Thu Jul 11 03:49:48 UTC 2019 (00:08:58 ago)
    Metric type: IGP, Accumulated Metric 40
     SID[0]: Adj, Label 80003, Address: local 11.5.8.5 remote 11.5.8.8
     SID[1]: Node, Label 16007, Address 10.1.1.7
     SID[2]: Node, Label 16002, Address 10.1.1.2
  Recorded path:
    None
  Disjoint Group Information:
    Type Link-Disjoint, Group 775
```

This output shows details for the LSP at Node B (10.1.1.6) that is used to carry traffic of EVPN VPWS EVI 101 towards node D (10.1.1.4).

```
RP/0/0/CPU0:SR-PCE# show pce lsp pcc ipv4 10.1.1.6 name bgp_c_11000_ep_10.1.1.4_discr_100
Thu Jul 11 03:58:56.812 UTC

PCE's tunnel database:
----------------------
PCC 10.1.1.6:

Tunnel Name: bgp_c_11000_ep_10.1.1.4_discr_100
Color: 11000
Interface Name: srte_c_11000_ep_10.1.1.4
 LSPs:
  LSP[0]:
   source 10.1.1.6, destination 10.1.1.4, tunnel ID 17, LSP ID 3
   State: Admin up, Operation up
   Setup type: Segment Routing
   Binding SID: 80061
   Maximum SID Depth: 10
   Absolute Metric Margin: 0
   Relative Metric Margin: 0%
   Preference: 100
   Bandwidth: signaled 0 kbps, applied 0 kbps
   PCEP information:
     PLSP-ID 0x12, flags: D:1 S:0 R:0 A:1 O:1 C:0
   LSP Role: Disjoint LSP
   State-sync PCE: None
   PCC: 10.1.1.6
   LSP is subdelegated to: None
   Reported path:
     Metric type: IGP, Accumulated Metric 40
      SID[0]: Node, Label 16001, Address 10.1.1.1
      SID[1]: Node, Label 16004, Address 10.1.1.4
   Computed path: (Local PCE)
     Computed Time: Thu Jul 11 03:49:48 UTC 2019 (00:09:08 ago)
     Metric type: IGP, Accumulated Metric 40
      SID[0]: Node, Label 16001, Address 10.1.1.1
      SID[1]: Node, Label 16004, Address 10.1.1.4
   Recorded path:
     None
   Disjoint Group Information:
     Type Link-Disjoint, Group 775
```

Based on the goals of this use case, SR-PCE computes link-disjoint paths for the SR policies associated with a pair of ELINE services between site 1 and site 2. In particular, disjoint LSPs from site 2 to site 1 are identified by association group-id 776. The output includes high-level information for LSPs associated to this group-id:

- At Node C (10.1.1.2): LSP symbolic name = bgp_c_10000_ep_10.1.1.5_discr_100
- At Node D (10.1.1.4): LSP symbolic name = bgp_c_10000_ep_10.1.1.6_discr_100

In this case, the SR-PCE was able to achieve the desired disjointness level; therefore, the Status is shown as "Satisfied".

```
RP/0/0/CPU0:SR-PCE# show pce association group-id 776
Thu Jul 11 03:52:24.370 UTC

PCE's association database:
----------------------
Association: Type Link-Disjoint, Group 776, Not Strict
 Associated LSPs:
  LSP[0]:
   PCC 10.1.1.4, tunnel name bgp_c_10000_ep_10.1.1.6_discr_100,  PLSP ID 16, tunnel ID 14,
 LSP ID 1, Configured on PCC
  LSP[1]:
   PCC 10.1.1.2, tunnel name bgp_c_10000_ep_10.1.1.5_discr_100,  PLSP ID 6, tunnel ID 21,
LSP ID 3, Configured on PCC
 Status: Satisfied
```

Use the **show pce lsp** command to display detailed information of an LSP present in the PCE's LSP database. This output shows details for the LSP at Node C (10.1.1.2) that is used to carry traffic of EVPN VPWS EVI 100 towards node A (10.1.1.5).

```
RP/0/0/CPU0:SR-PCE# show pce lsp pcc ipv4 10.1.1.2 name bgp_c_10000_ep_10.1.1.5_discr_100
Thu Jul 11 03:55:21.706 UTC

PCE's tunnel database:
----------------------
PCC 10.1.1.2:

Tunnel Name: bgp_c_10000_ep_10.1.1.5_discr_100
Color: 10000
Interface Name: srte_c_10000_ep_10.1.1.5
 LSPs:
  LSP[0]:
   source 10.1.1.2, destination 10.1.1.5, tunnel ID 21, LSP ID 3
   State: Admin up, Operation up
   Setup type: Segment Routing
   Binding SID: 80052
   Maximum SID Depth: 10
   Absolute Metric Margin: 0
   Relative Metric Margin: 0%
   Preference: 100
   Bandwidth: signaled 0 kbps, applied 0 kbps
   PCEP information:
     PLSP-ID 0x6, flags: D:1 S:0 R:0 A:1 O:1 C:0
   LSP Role: Exclude LSP
   State-sync PCE: None
   PCC: 10.1.1.2
   LSP is subdelegated to: None
   Reported path:
     Metric type: IGP, Accumulated Metric 40
      SID[0]: Node, Label 16007, Address 10.1.1.7
      SID[1]: Node, Label 16008, Address 10.1.1.8
      SID[2]: Adj, Label 80005, Address: local 11.5.8.8 remote 11.5.8.5
   Computed path: (Local PCE)
     Computed Time: Thu Jul 11 03:50:03 UTC 2019 (00:05:18 ago)
     Metric type: IGP, Accumulated Metric 40
      SID[0]: Node, Label 16007, Address 10.1.1.7
      SID[1]: Node, Label 16008, Address 10.1.1.8
      SID[2]: Adj, Label 80005, Address: local 11.5.8.8 remote 11.5.8.5
   Recorded path:
     None
   Disjoint Group Information:
     Type Link-Disjoint, Group 776
```

This output shows details for the LSP at Node D (10.1.1.4) used to carry traffic of EVPN VPWS EVI 101 towards node B (10.1.1.6).

```
RP/0/0/CPU0:SR-PCE# show pce lsp pcc ipv4 10.1.1.4 name bgp_c_10000_ep_10.1.1.6_discr_100
Thu Jul 11 03:55:23.296 UTC

PCE's tunnel database:
----------------------
PCC 10.1.1.4:

Tunnel Name: bgp_c_10000_ep_10.1.1.6_discr_100
Color: 10000
Interface Name: srte_c_10000_ep_10.1.1.6
 LSPs:
  LSP[0]:
   source 10.1.1.4, destination 10.1.1.6, tunnel ID 14, LSP ID 1
   State: Admin up, Operation up
   Setup type: Segment Routing
   Binding SID: 80047
   Maximum SID Depth: 10
   Absolute Metric Margin: 0
   Relative Metric Margin: 0%
   Preference: 100
   Bandwidth: signaled 0 kbps, applied 0 kbps
   PCEP information:
     PLSP-ID 0x10, flags: D:1 S:0 R:0 A:1 O:1 C:0
   LSP Role: Disjoint LSP
   State-sync PCE: None
   PCC: 10.1.1.4
   LSP is subdelegated to: None
   Reported path:
     Metric type: IGP, Accumulated Metric 40
      SID[0]: Node, Label 16001, Address 10.1.1.1
      SID[1]: Node, Label 16006, Address 10.1.1.6
   Computed path: (Local PCE)
     Computed Time: Thu Jul 11 03:50:03 UTC 2019 (00:05:20 ago)
     Metric type: IGP, Accumulated Metric 40
      SID[0]: Node, Label 16001, Address 10.1.1.1
      SID[1]: Node, Label 16006, Address 10.1.1.6
   Recorded path:
     None
   Disjoint Group Information:
     Type Link-Disjoint, Group 776
```

### Verification: Site 1 Node A

This section depicts verification steps at Node A.

Use the **show bgp l2vpn evpn** command to display BGP prefix information for EVPN-VPWS EVI 100 (rd 10.1.1.5:100). The output includes an EVPN route-type 1 route with color 11000 originated at Node C (10.1.1.2).

```
RP/0/RSP0/CPU0:Node-A# show bgp l2vpn evpn rd 10.1.1.5:100
Wed Jul 10 18:57:57.704 PST
BGP router identifier 10.1.1.5, local AS number 65000
BGP generic scan interval 60 secs
Non-stop routing is enabled
BGP table state: Active
Table ID: 0x0   RD version: 0
BGP main routing table version 360
BGP NSR Initial initsync version 1 (Reached)
BGP NSR/ISSU Sync-Group versions 0/0
BGP scan interval 60 secs
```

```
Status codes: s suppressed, d damped, h history, * valid, > best
              i - internal, r RIB-failure, S stale, N Nexthop-discard
Origin codes: i - IGP, e - EGP, ? - incomplete
   Network            Next Hop            Metric LocPrf Weight Path
Route Distinguisher: 10.1.1.5:100 (default for vrf VPWS:100)
*> [1][0000.0000.0000.0000.0000][11]/120
                      0.0.0.0                                0 i
*>i[1][0000.0000.0000.0000.0000][21]/120
                      10.1.1.2 C:11000               100      0 i
```

The following output displays the details for the incoming EVPN RT1. Note the presence of BGP extended color community 11000, and that the prefix is associated with an SR policy with color 11000 and BSID value of 80044.

```
RP/0/RSP0/CPU0:Node-A# show bgp l2vpn evpn rd 10.1.1.5:100
[1][0000.0000.0000.0000.0000][21]/120
Wed Jul 10 18:57:58.107 PST
BGP routing table entry for [1][0000.0000.0000.0000.0000][21]/120, Route Distinguisher:
10.1.1.5:100
Versions:
  Process           bRIB/RIB  SendTblVer
  Speaker                360         360
Last Modified: Jul 10 18:36:18.369 for 00:21:40
Paths: (1 available, best #1)
  Not advertised to any peer
  Path #1: Received by speaker 0
  Not advertised to any peer
  Local
    10.1.1.2 C:11000 (bsid:80044) (metric 40) from 10.1.1.253 (10.1.1.2)
      Received Label 80056
      Origin IGP, localpref 100, valid, internal, best, group-best, import-candidate,
imported, rib-install
      Received Path ID 0, Local Path ID 1, version 358
      Extended community: Color:11000 RT:65000:100
      Originator: 10.1.1.2, Cluster list: 10.1.1.253
      SR policy color 11000, up, registered, bsid 80044, if-handle 0x00001b20

     Source AFI: L2VPN EVPN, Source VRF: default, Source Route Distinguisher: 10.1.1.2:100
```

Use the **show l2vpn xconnect** command to display the state associated with EVPN-VPWS EVI 100 service.

```
RP/0/RSP0/CPU0:Node-A# show l2vpn xconnect group evpn_vpws_group
Wed Jul 10 18:58:02.333 PST
Legend: ST = State, UP = Up, DN = Down, AD = Admin Down, UR = Unresolved,
        SB = Standby, SR = Standby Ready, (PP) = Partially Programmed

XConnect                   Segment 1                       Segment 2
Group      Name       ST   Description            ST       Description            ST
------------------------   ----------------------------   ------------------------------
evpn_vpws_group
           evpn_vpws_100
                      UP   Gi0/0/0/3.2500         UP       EVPN 100,21,10.1.1.2    UP
----------------------------------------------------------------------------------------
```

The following output shows the details for the service. Note that the service is associated with the on-demand SR policy with color 11000 and end-point 10.1.1.2 (node C).

```
RP/0/RSP0/CPU0:Node-A# show l2vpn xconnect group evpn_vpws_group xc-name evpn_vpws_100
detail
Wed Jul 10 18:58:02.755 PST
```

```
Group evpn_vpws_group, XC evpn_vpws_100, state is up; Interworking none
  AC: GigabitEthernet0/0/0/3.2500, state is up
    Type VLAN; Num Ranges: 1
    Rewrite Tags: []
    VLAN ranges: [2500, 2500]
    MTU 1500; XC ID 0x120000c; interworking none
    Statistics:
      packets: received 0, sent 0
      bytes: received 0, sent 0
      drops: illegal VLAN 0, illegal length 0
  EVPN: neighbor 10.1.1.2, PW ID: evi 100, ac-id 21, state is up ( established )
    XC ID 0xa0000007
    Encapsulation MPLS
    Source address 10.1.1.5
    Encap type Ethernet, control word enabled
    Sequencing not set
    Preferred path Active : SR TE srte_c_11000_ep_10.1.1.2, On-Demand, fallback enabled
    Tunnel : Up
    Load Balance Hashing: src-dst-mac

      EVPN         Local                          Remote
      ------------ ------------------------------ ------------------------------
      Label        80040                          80056
      MTU          1500                           1500
      Control word enabled                        enabled
      AC ID        11                             21
      EVPN type    Ethernet                       Ethernet

      ------------ ------------------------------ ------------------------------
    Create time: 10/07/2019 18:31:30 (1d17h ago)
    Last time status changed: 10/07/2019 19:42:00 (1d16h ago)
    Last time PW went down: 10/07/2019 19:40:55 (1d16h ago)
    Statistics:
      packets: received 0, sent 0
      bytes: received 0, sent 0
```

Use the **show segment-routing traffic-eng policy** command with **tabular** option to display SR policy summary information.

The following output shows the on-demand SR policy with BSID 80044 that was triggered by EVPN RT1 prefix with color 11000 advertised by node C (10.1.1.2).

```
RP/0/RSP0/CPU0:Node-A# show segment-routing traffic-eng policy color 11000 tabular
Wed Jul 10 18:58:00.732 PST

 Color             Endpoint  Admin   Oper              Binding
                             State  State                 SID
------ -------------------- ------ ------ --------------------
 11000              10.1.1.2     up     up                80044
```

The following output shows the details for the on-demand SR policy. Note that the SR policy's active candidate path (preference 100) is computed by SR-PCE (10.1.1.207).

Based on the goals of this use case, SR-PCE computes link-disjoint paths for the SR policies associated with a pair of ELINE services between site 1 and site 2. Specifically, from site 1 to site 2, LSP at Node A (srte_c_11000_ep_10.1.1.2) is link-disjoint from LSP at Node B (srte_c_11000_ep_10.1.1.4).

```
RP/0/RSP0/CPU0:Node-A# show segment-routing traffic-eng policy color 11000
Wed Jul 10 19:15:47.217 PST

SR-TE policy database
```

```
---------------------

Color: 11000, End-point: 10.1.1.2
  Name: srte_c_11000_ep_10.1.1.2
  Status:
    Admin: up  Operational: up for 00:39:31 (since Jul 10 18:36:00.471)
  Candidate-paths:
    Preference: 200 (BGP ODN) (shutdown)
      Requested BSID: dynamic
      PCC info:
        Symbolic name: bgp_c_11000_ep_10.1.1.2_discr_200
        PLSP-ID: 19
      Dynamic (invalid)
    Preference: 100 (BGP ODN) (active)
      Requested BSID: dynamic
      PCC info:
        Symbolic name: bgp_c_11000_ep_10.1.1.2_discr_100
        PLSP-ID: 18
      Dynamic (pce 10.1.1.207) (valid)
        Metric Type: IGP,   Path Accumulated Metric: 40
          80003 [Adjacency-SID, 11.5.8.5 - 11.5.8.8]
          16007 [Prefix-SID, 10.1.1.7]
          16002 [Prefix-SID, 10.1.1.2]
  Attributes:
    Binding SID: 80044
    Forward Class: 0
    Steering BGP disabled: no
    IPv6 caps enable: yes
```

### Verification: Site 1 Node B

This section depicts verification steps at Node B.

Use the **show bgp l2vpn evpn** command to display BGP prefix information for EVPN-VPWS EVI 101 (rd 10.1.1.6:101). The output includes an EVPN route-type 1 route with color 11000 originated at Node D (10.1.1.4).

```
RP/0/RSP0/CPU0:Node-B# show bgp l2vpn evpn rd 10.1.1.6:101
Wed Jul 10 19:08:54.964 PST
BGP router identifier 10.1.1.6, local AS number 65000
BGP generic scan interval 60 secs
Non-stop routing is enabled
BGP table state: Active
Table ID: 0x0   RD version: 0
BGP main routing table version 322
BGP NSR Initial initsync version 7 (Reached)
BGP NSR/ISSU Sync-Group versions 0/0
BGP scan interval 60 secs

Status codes: s suppressed, d damped, h history, * valid, > best
              i - internal, r RIB-failure, S stale, N Nexthop-discard
Origin codes: i - IGP, e - EGP, ? - incomplete
   Network            Next Hop            Metric LocPrf Weight Path
Route Distinguisher: 10.1.1.6:101 (default for vrf VPWS:101)
*> [1][0000.0000.0000.0000.0000][12]/120
                      0.0.0.0                                0 i
*>i[1][0000.0000.0000.0000.0000][22]/120
                      10.1.1.4 C:11000               100      0 i

Processed 2 prefixes, 2 paths
```

The following output displays the details for the incoming EVPN RT1. Note the presence of BGP extended color community 11000, and that the prefix is associated with an SR policy with color 11000 and BSID value of 80061.

```
RP/0/RSP0/CPU0:Node-B# show bgp l2vpn evpn rd 10.1.1.6:101
[1][0000.0000.0000.0000.0000][22]/120
Wed Jul 10 19:08:55.039 PST
BGP routing table entry for [1][0000.0000.0000.0000.0000][22]/120, Route Distinguisher:
10.1.1.6:101
Versions:
  Process           bRIB/RIB  SendTblVer
  Speaker                322         322
Last Modified: Jul 10 18:42:10.408 for 00:26:44
Paths: (1 available, best #1)
  Not advertised to any peer
  Path #1: Received by speaker 0
  Not advertised to any peer
  Local
    10.1.1.4 C:11000 (bsid:80061) (metric 40) from 10.1.1.253 (10.1.1.4)
      Received Label 80045
      Origin IGP, localpref 100, valid, internal, best, group-best, import-candidate,
imported, rib-install
      Received Path ID 0, Local Path ID 1, version 319
      Extended community: Color:11000 RT:65000:101
      Originator: 10.1.1.4, Cluster list: 10.1.1.253
      SR policy color 11000, up, registered, bsid 80061, if-handle 0x00000560

     Source AFI: L2VPN EVPN, Source VRF: default, Source Route Distinguisher: 10.1.1.4:101
```

Use the **show l2vpn xconnect** command to display the state associated with EVPN-VPWS EVI 101 service.

```
RP/0/RSP0/CPU0:Node-B# show l2vpn xconnect group evpn_vpws_group
Wed Jul 10 19:08:56.388 PST
Legend: ST = State, UP = Up, DN = Down, AD = Admin Down, UR = Unresolved,
        SB = Standby, SR = Standby Ready, (PP) = Partially Programmed

XConnect                   Segment 1                       Segment 2
Group      Name       ST   Description            ST       Description            ST
------------------------   ----------------------------    ----------------------------
evpn_vpws_group
           evpn_vpws_101
                      UP   Te0/3/0/0/8.2500       UP       EVPN 101,22,10.1.1.4    UP
----------------------------------------------------------------------------------------
```

The following output shows the details for the service. Note that the service is associated with the on-demand SR policy with color 11000 and end-point 10.1.1.4 (node D).

```
RP/0/RSP0/CPU0:Node-B# show l2vpn xconnect group evpn_vpws_group xc-name evpn_vpws_101
Wed Jul 10 19:08:56.511 PST

Group evpn_vpws_group, XC evpn_vpws_101, state is up; Interworking none
  AC: TenGigE0/3/0/0/8.2500, state is up
    Type VLAN; Num Ranges: 1
    Rewrite Tags: []
    VLAN ranges: [2500, 2500]
    MTU 1500; XC ID 0x2a0000e; interworking none
    Statistics:
      packets: received 0, sent 0
      bytes: received 0, sent 0
      drops: illegal VLAN 0, illegal length 0
  EVPN: neighbor 10.1.1.4, PW ID: evi 101, ac-id 22, state is up ( established )
```

```
    XC ID 0xa0000009
    Encapsulation MPLS
    Source address 10.1.1.6
    Encap type Ethernet, control word enabled
    Sequencing not set
    Preferred path Active : SR TE srte_c_11000_ep_10.1.1.4, On-Demand, fallback enabled
    Tunnel : Up
    Load Balance Hashing: src-dst-mac

      EVPN         Local                          Remote
      ------------ ------------------------------ ------------------------------
      Label        80060                          80045
      MTU          1500                           1500
      Control word enabled                        enabled
      AC ID        12                             22
      EVPN type    Ethernet                       Ethernet

      ------------ ------------------------------ ------------------------------
    Create time: 10/07/2019 18:32:49 (00:36:06 ago)
    Last time status changed: 10/07/2019 18:42:07 (00:26:49 ago)
    Statistics:
      packets: received 0, sent 0
      bytes: received 0, sent 0
```

Use the **show segment-routing traffic-eng policy** command with **tabular** option to display SR policy summary information.

The following output shows the on-demand SR policy with BSID 80061 that was triggered by EVPN RT1 prefix with color 11000 advertised by node D (10.1.1.4).

```
RP/0/RSP0/CPU0:Node-B# show segment-routing traffic-eng policy color 11000 tabular
Wed Jul 10 19:08:56.146 PST

 Color             Endpoint  Admin   Oper              Binding
                             State  State                  SID
------ -------------------- ------ ------ --------------------
 11000              10.1.1.4     up     up                80061
```

The following output shows the details for the on-demand SR policy. Note that the SR policy's active candidate path (preference 100) is computed by SR-PCE (10.1.1.207).

Based on the goals of this use case, SR-PCE computes link-disjoint paths for the SR policies associated with a pair of ELINE services between site 1 and site 2. Specifically, from site 1 to site 2, LSP at Node B (srte_c_11000_ep_10.1.1.4) is link-disjoint from LSP at Node A (srte_c_11000_ep_10.1.1.2).

```
RP/0/RSP0/CPU0:Node-B# show segment-routing traffic-eng policy color 11000
Wed Jul 10 19:08:56.207 PST

SR-TE policy database
---------------------

Color: 11000, End-point: 10.1.1.4
  Name: srte_c_11000_ep_10.1.1.4
  Status:
    Admin: up  Operational: up for 00:26:47 (since Jul 10 18:40:05.868)
  Candidate-paths:
    Preference: 200 (BGP ODN) (shutdown)
      Requested BSID: dynamic
      PCC info:
        Symbolic name: bgp_c_11000_ep_10.1.1.4_discr_200
        PLSP-ID: 19
      Dynamic (invalid)
```

```
    Preference: 100 (BGP ODN) (active)
      Requested BSID: dynamic
      PCC info:
        Symbolic name: bgp_c_11000_ep_10.1.1.4_discr_100
        PLSP-ID: 18
      Dynamic (pce 10.1.1.207) (valid)
        Metric Type: IGP,   Path Accumulated Metric: 40
          16001 [Prefix-SID, 10.1.1.1]
          16004 [Prefix-SID, 10.1.1.4]
  Attributes:
    Binding SID: 80061
    Forward Class: 0
    Steering BGP disabled: no
    IPv6 caps enable: yes
```

### Verification: Site 2 Node C

This section depicts verification steps at Node C.

Use the **show bgp l2vpn evpn** command to display BGP prefix information for EVPN-VPWS EVI 100 (rd 10.1.1.2:100). The output includes an EVPN route-type 1 route with color 10000 originated at Node A (10.1.1.5).

```
RP/0/RSP0/CPU0:Node-C# show bgp l2vpn evpn rd 10.1.1.2:100
BGP router identifier 10.1.1.2, local AS number 65000
BGP generic scan interval 60 secs
Non-stop routing is enabled
BGP table state: Active
Table ID: 0x0   RD version: 0
BGP main routing table version 21
BGP NSR Initial initsync version 1 (Reached)
BGP NSR/ISSU Sync-Group versions 0/0
BGP scan interval 60 secs

Status codes: s suppressed, d damped, h history, * valid, > best
              i - internal, r RIB-failure, S stale, N Nexthop-discard
Origin codes: i - IGP, e - EGP, ? - incomplete
   Network            Next Hop            Metric LocPrf Weight Path
Route Distinguisher: 10.1.1.2:100 (default for vrf VPWS:100)
*>i[1][0000.0000.0000.0000.0000][11]/120
                      10.1.1.5 C:10000               100      0 i
*> [1][0000.0000.0000.0000.0000][21]/120
                      0.0.0.0                                 0 i
```

The following output displays the details for the incoming EVPN RT1. Note the presence of BGP extended color community 10000, and that the prefix is associated with an SR policy with color 10000 and BSID value of 80058.

```
RP/0/RSP0/CPU0:Node-C# show bgp l2vpn evpn rd 10.1.1.2:100
[1][0000.0000.0000.0000.0000][11]/120
BGP routing table entry for [1][0000.0000.0000.0000.0000][11]/120, Route Distinguisher:
10.1.1.2:100
Versions:
  Process           bRIB/RIB  SendTblVer
  Speaker                 20          20
Last Modified: Jul 10 18:36:20.503 for 00:45:21
Paths: (1 available, best #1)
  Not advertised to any peer
  Path #1: Received by speaker 0
  Not advertised to any peer
  Local
    10.1.1.5 C:10000 (bsid:80058) (metric 40) from 10.1.1.253 (10.1.1.5)
```

```
      Received Label 80040
      Origin IGP, localpref 100, valid, internal, best, group-best, import-candidate,
imported, rib-install
      Received Path ID 0, Local Path ID 1, version 18
      Extended community: Color:10000 RT:65000:100
      Originator: 10.1.1.5, Cluster list: 10.1.1.253
      SR policy color 10000, up, registered, bsid 80058, if-handle 0x000006a0

      Source AFI: L2VPN EVPN, Source VRF: default, Source Route Distinguisher: 10.1.1.5:100
```

Use the **show l2vpn xconnect** command to display the state associated with EVPN-VPWS EVI 100 service.

```
RP/0/RSP0/CPU0:Node-C# show l2vpn xconnect group evpn_vpws_group
Legend: ST = State, UP = Up, DN = Down, AD = Admin Down, UR = Unresolved,
        SB = Standby, SR = Standby Ready, (PP) = Partially Programmed

XConnect                   Segment 1                       Segment 2
Group      Name       ST   Description            ST       Description            ST
------------------------   ------------------------------   ------------------------------
evpn_vpws_group
           evpn_vpws_100
                      UP   Gi0/0/0/3.2500         UP       EVPN 100,11,10.1.1.5    UP
------------------------------------------------------------------------------------------
```

The following output shows the details for the service. Note that the service is associated with the on-demand SR policy with color 10000 and end-point 10.1.1.5 (node A).

```
RP/0/RSP0/CPU0:Node-C# show l2vpn xconnect group evpn_vpws_group xc-name evpn_vpws_100

Group evpn_vpws_group, XC evpn_vpws_100, state is up; Interworking none
  AC: GigabitEthernet0/0/0/3.2500, state is up
    Type VLAN; Num Ranges: 1
    Rewrite Tags: []
    VLAN ranges: [2500, 2500]
    MTU 1500; XC ID 0x1200008; interworking none
    Statistics:
      packets: received 0, sent 0
      bytes: received 0, sent 0
      drops: illegal VLAN 0, illegal length 0
  EVPN: neighbor 10.1.1.5, PW ID: evi 100, ac-id 11, state is up ( established )
    XC ID 0xa0000003
    Encapsulation MPLS
    Source address 10.1.1.2
    Encap type Ethernet, control word enabled
    Sequencing not set
    Preferred path Active : SR TE srte_c_10000_ep_10.1.1.5, On-Demand, fallback enabled
    Tunnel : Up
    Load Balance Hashing: src-dst-mac

      EVPN         Local                           Remote
      ------------ ------------------------------- ------------------------------
      Label        80056                           80040
      MTU          1500                            1500
      Control word enabled                         enabled
      AC ID        21                              11
      EVPN type    Ethernet                        Ethernet

      ------------ ------------------------------- ------------------------------
    Create time: 10/07/2019 18:36:16 (1d19h ago)
    Last time status changed: 10/07/2019 19:41:59 (1d18h ago)
    Last time PW went down: 10/07/2019 19:40:54 (1d18h ago)
    Statistics:
```

```
      packets: received 0, sent 0
      bytes: received 0, sent 0
```

Use the **show segment-routing traffic-eng policy** command with **tabular** option to display SR policy summary information.

The following output shows the on-demand SR policy with BSID 80058 that was triggered by EVPN RT1 prefix with color 10000 advertised by node A (10.1.1.5).

```
RP/0/RSP0/CPU0:Node-C# show segment-routing traffic-eng policy color 10000 tabular

 Color             Endpoint  Admin   Oper              Binding
                             State  State                 SID
------ -------------------- ------ ------ --------------------
 10000              10.1.1.5    up     up                80058
```

The following output shows the details for the on-demand SR policy. Note that the SR policy's active candidate path (preference 100) is computed by SR-PCE (10.1.1.207).

Based on the goals of this use case, SR-PCE computes link-disjoint paths for the SR policies associated with a pair of ELINE services between site 1 and site 2. Specifically, from site 2 to site 1, LSP at Node C (srte_c_10000_ep_10.1.1.5) is link-disjoint from LSP at Node D (srte_c_10000_ep_10.1.1.6).

```
RP/0/RSP0/CPU0:Node-C# show segment-routing traffic-eng policy color 10000

SR-TE policy database
---------------------

Color: 10000, End-point: 10.1.1.5
  Name: srte_c_10000_ep_10.1.1.5
  Status:
    Admin: up  Operational: up for 00:12:35 (since Jul 10 19:49:21.890)
  Candidate-paths:
    Preference: 200 (BGP ODN) (shutdown)
      Requested BSID: dynamic
      PCC info:
        Symbolic name: bgp_c_10000_ep_10.1.1.5_discr_200
        PLSP-ID: 7
      Dynamic (invalid)
    Preference: 100 (BGP ODN) (active)
      Requested BSID: dynamic
      PCC info:
        Symbolic name: bgp_c_10000_ep_10.1.1.5_discr_100
        PLSP-ID: 6
      Dynamic (pce 10.1.1.207) (valid)
        Metric Type: IGP,   Path Accumulated Metric: 40
          16007 [Prefix-SID, 10.1.1.7]
          16008 [Prefix-SID, 10.1.1.8]
          80005 [Adjacency-SID, 11.5.8.8 - 11.5.8.5]
  Attributes:
    Binding SID: 80058
    Forward Class: 0
    Steering BGP disabled: no
    IPv6 caps enable: yes
```

### Verification: Site 2 Node D

This section depicts verification steps at Node D.

Use the **show bgp l2vpn evpn** command to display BGP prefix information for EVPN-VPWS EVI 101 (rd 10.1.1.4:101). The output includes an EVPN route-type 1 route with color 10000 originated at Node B (10.1.1.6).

```
RP/0/RSP0/CPU0:Node-D# show bgp l2vpn evpn rd 10.1.1.4:101
BGP router identifier 10.1.1.4, local AS number 65000
BGP generic scan interval 60 secs
Non-stop routing is enabled
BGP table state: Active
Table ID: 0x0   RD version: 0
BGP main routing table version 570
BGP NSR Initial initsync version 1 (Reached)
BGP NSR/ISSU Sync-Group versions 0/0
BGP scan interval 60 secs

Status codes: s suppressed, d damped, h history, * valid, > best
              i - internal, r RIB-failure, S stale, N Nexthop-discard
Origin codes: i - IGP, e - EGP, ? - incomplete
   Network            Next Hop            Metric LocPrf Weight Path
Route Distinguisher: 10.1.1.4:101 (default for vrf VPWS:101)
*>i[1][0000.0000.0000.0000.0000][12]/120
                      10.1.1.6 C:10000             100      0 i
*> [1][0000.0000.0000.0000.0000][22]/120
                      0.0.0.0                               0 i

Processed 2 prefixes, 2 paths
```

The following output displays the details for the incoming EVPN RT1. Note the presence of BGP extended color community 10000, and that the prefix is associated with an SR policy with color 10000 and BSID value of 80047.

```
RP/0/RSP0/CPU0:Node-D# show bgp l2vpn evpn rd 10.1.1.4:101
[1][0000.0000.0000.0000.0000][12]/120
BGP routing table entry for [1][0000.0000.0000.0000.0000][12]/120, Route Distinguisher:
10.1.1.4:101
Versions:
  Process           bRIB/RIB  SendTblVer
  Speaker                569         569
Last Modified: Jul 10 18:42:12.455 for 00:45:38
Paths: (1 available, best #1)
  Not advertised to any peer
  Path #1: Received by speaker 0
  Not advertised to any peer
  Local
    10.1.1.6 C:10000 (bsid:80047) (metric 40) from 10.1.1.253 (10.1.1.6)
      Received Label 80060
      Origin IGP, localpref 100, valid, internal, best, group-best, import-candidate,
imported, rib-install
      Received Path ID 0, Local Path ID 1, version 568
      Extended community: Color:10000 RT:65000:101
      Originator: 10.1.1.6, Cluster list: 10.1.1.253
      SR policy color 10000, up, registered, bsid 80047, if-handle 0x00001720

      Source AFI: L2VPN EVPN, Source VRF: default, Source Route Distinguisher: 10.1.1.6:101
```

Use the **show l2vpn xconnect** command to display the state associated with EVPN-VPWS EVI 101 service.

```
RP/0/RSP0/CPU0:Node-D# show l2vpn xconnect group evpn_vpws_group
Legend: ST = State, UP = Up, DN = Down, AD = Admin Down, UR = Unresolved,
        SB = Standby, SR = Standby Ready, (PP) = Partially Programmed
```

```
XConnect                    Segment 1                       Segment 2
Group      Name       ST    Description            ST       Description            ST
------------------------    ----------------------------    ----------------------------
evpn_vpws_group
           evpn_vpws_101
                        UP  Gi0/0/0/1.2500         UP       EVPN 101,12,10.1.1.6    UP
-----------------------------------------------------------------------------------------
```

The following output shows the details for the service. Note that the service is associated with the on-demand SR policy with color 10000 and end-point 10.1.1.6 (node B).

```
RP/0/RSP0/CPU0:Node-D# show l2vpn xconnect group evpn_vpws_group xc-name evpn_vpws_101

Group evpn_vpws_group, XC evpn_vpws_101, state is up; Interworking none
  AC: GigabitEthernet0/0/0/1.2500, state is up
    Type VLAN; Num Ranges: 1
    Rewrite Tags: []
    VLAN ranges: [2500, 2500]
    MTU 1500; XC ID 0x120000c; interworking none
    Statistics:
      packets: received 0, sent 0
      bytes: received 0, sent 0
      drops: illegal VLAN 0, illegal length 0
  EVPN: neighbor 10.1.1.6, PW ID: evi 101, ac-id 12, state is up ( established )
    XC ID 0xa000000d
    Encapsulation MPLS
    Source address 10.1.1.4
    Encap type Ethernet, control word enabled
    Sequencing not set
    Preferred path Active : SR TE srte_c_10000_ep_10.1.1.6, On-Demand, fallback enabled
    Tunnel : Up
    Load Balance Hashing: src-dst-mac

      EVPN         Local                           Remote
      ------------ ------------------------------- ------------------------------
      Label        80045                           80060
      MTU          1500                            1500
      Control word enabled                         enabled
      AC ID        22                              12
      EVPN type    Ethernet                        Ethernet

      ------------ ------------------------------- ------------------------------
    Create time: 10/07/2019 18:42:07 (00:45:49 ago)
    Last time status changed: 10/07/2019 18:42:09 (00:45:47 ago)
    Statistics:
      packets: received 0, sent 0
      bytes: received 0, sent 0
```

Use the **show segment-routing traffic-eng policy** command with **tabular** option to display SR policy summary information.

The following output shows the on-demand SR policy with BSID 80047 that was triggered by EVPN RT1 prefix with color 10000 advertised by node B (10.1.1.6).

```
RP/0/RSP0/CPU0:Node-D# show segment-routing traffic-eng policy color 10000 tabular

 Color             Endpoint  Admin   Oper              Binding
                             State  State                 SID
------ -------------------- ------ ------ --------------------
 10000              10.1.1.6     up     up                80047
```

The following output shows the details for the on-demand SR policy. Note that the SR policy's active candidate path (preference 100) is computed by SR-PCE (10.1.1.207).

Based on the goals of this use case, SR-PCE computes link-disjoint paths for the SR policies associated with a pair of ELINE services between site 1 and site 2. Specifically, from site 2 to site 1, LSP at Node D (srte_c_10000_ep_10.1.1.6) is link-disjoint from LSP at Node C (srte_c_10000_ep_10.1.1.5).

```
RP/0/RSP0/CPU0:Node-D# show segment-routing traffic-eng policy color 10000

SR-TE policy database
---------------------

Color: 10000, End-point: 10.1.1.6
  Name: srte_c_10000_ep_10.1.1.6
  Status:
    Admin: up  Operational: up for 01:23:04 (since Jul 10 18:42:07.350)
  Candidate-paths:
    Preference: 200 (BGP ODN) (shutdown)
      Requested BSID: dynamic
      PCC info:
        Symbolic name: bgp_c_10000_ep_10.1.1.6_discr_200
        PLSP-ID: 17
      Dynamic (invalid)
    Preference: 100 (BGP ODN) (active)
      Requested BSID: dynamic
      PCC info:
        Symbolic name: bgp_c_10000_ep_10.1.1.6_discr_100
        PLSP-ID: 16
      Dynamic (pce 10.1.1.207) (valid)
        Metric Type: IGP,   Path Accumulated Metric: 40
          16001 [Prefix-SID, 10.1.1.1]
          16006 [Prefix-SID, 10.1.1.6]
  Attributes:
    Binding SID: 80047
    Forward Class: 0
    Steering BGP disabled: no
    IPv6 caps enable: yes
```

# Manually Provisioned SR Policy

Manually provisioned SR policies are configured on the head-end router. These policies can use dynamic paths or explicit paths. See the SR-TE Policy Path Types, on page 318 section for information on manually provisioning an SR policy using dynamic or explicit paths.

# PCE-Initiated SR Policy

An SR-TE policy can be configured on the path computation element (PCE) to reduce link congestion or to minimize the number of network touch points.

The PCE collects network information, such as traffic demand and link utilization. When the PCE determines that a link is congested, it identifies one or more flows that are causing the congestion. The PCE finds a suitable path and deploys an SR-TE policy to divert those flows, without moving the congestion to another part of the network. When there is no more link congestion, the policy is removed.

To minimize the number of network touch points, an application, such as a Network Services Orchestrator (NSO), can request the PCE to create an SR-TE policy. PCE deploys the SR-TE policy using PCC-PCE communication protocol (PCEP).

For more information, see the PCE-Initiated SR Policies, on page 480 section.

# Cumulative Metric Bounds (Delay-Bound Use-Case)

*Table 36: Feature History Table*

| Feature Name | Release Information | Feature Description |
|---|---|---|
| Cumulative Metric Bounds (Delay-Bound use-case) | Release 7.3.1 | With this feature, SRTE calculates a shortest path that satisfies multiple metric bounds.<br>This feature provides flexibility for finding paths within metric bounds, for parameters such as latency, hop count, IGP and TE. |

SRTE can calculate a shortest path with cumulative metric bounds. For example, consider these metric bounds:

- IGP metric <= 10
- TE metric <= 60
- Hop count <= 4
- Latency <= 55

When an SR policy is configured on a head-end node with these metric bounds, a path is finalized towards the specified destination only if it meets each of these criteria.

You can set the maximum number of attempts for computing a shortest path that satisfies the cumulative metric bounds criteria, by using the **kshortest-paths** command in SR-TE configuration mode.

### Restrictions

- PCE-based cumulative metric bounds computations are not supported. You must use non-PCE (SR-TE topology) based configuration for path calculation, for cumulative bounds.
- If you use PCE dynamic computation configuration with cumulative bounds, the PCE computes a path and validates against cumulative bounds. If it is valid, then the policy is created with this path on PCC. If the initial path doesn't respect the bounds, then the path is not considered, and no further K-shortest path algorithm is executed to find the path.

### Configuring SRTE Shortest Path Calculation For Cumulative Metric Bounds

You can enable this feature for SR, and ODN SR policy configurations, as shown below.

### SR Policy

**SR Policy** - A policy called **fromAtoB_XTC** is created towards destination IP address 192.168.0.2. Also, the candidate-paths preference, and other attributes are enabled.

```
Router# configure terminal
Router(config)# segment-routing traffic-eng policy fromAtoB_XTC
Router(config-sr-te-policy)# color 2 end-point ipv4 192.168.0.2
Router(config-sr-te-policy)# candidate-paths preference 100
Router(config-sr-te-policy-path-pref)# dynamic metric type te
```

**Cumulative Metric bounds** – IGP, TE, hop count, and latency metric bounds are set. SRTE calculates paths only when each criterion is satisfied.

```
Router(config-sr-te-policy-path-pref)# constraints bounds cumulative
Router(config-sr-te-pref-const-bounds-type)# type igp 10
Router(config-sr-te-pref-const-bounds-type)# type te 60
Router(config-sr-te-pref-const-bounds-type)# type hopcount 4
Router(config-sr-te-pref-const-bounds-type)# type latency 55
Router(config-sr-te-pref-const-bounds-type)# commit
```

### ODN SR Policy

**SR ODN Policy** – An SR ODN policy with color 1000 is created. Also, the candidate-paths value is on-demand.

```
Router# configure terminal
Router(config)# segment-routing traffic-eng
Router(config-sr-te)# on-demand color 1000 dynamic metric type te
Router(config-sr-te)# candidate-paths on-demand
Router(config-sr-te-candidate-path-type)# exit
Router(config-sr-te-candidate-path)# exit
```

**Cumulative Metric bounds** – IGP, TE, hop count, and latency metric bounds are set for the policy. SRTE calculates paths, only when each criterion is satisfied.

```
Router(config-sr-te)# on-demand color 1000 dynamic bounds cumulative
Router(config-sr-te-odc-bounds-type)# type igp 100
Router(config-sr-te-odc-bounds-type)# type te 60
Router(config-sr-te-odc-bounds-type)# type hopcount 6
Router(config-sr-te-odc-bounds-type)# type latency 1000
Router(config-sr-te-odc-bounds-type)# commit
```

To set the maximum number of attempts for computing paths that satisfy the cumulative metric bounds criteria, use the **kshortest-paths** command.

```
Router# configure terminal
Router(config)# segment-routing traffic-eng
Router(config-sr-te)# kshortest-paths 120
Router(config-sr-te)# commit
```

### Verification

Use this command to view SR policy configuration details. Pointers:

- The **Number of K-shortest-paths** field displays 4. It means that the K-shortest path algorithm took 4 computations to find the right path. The 4 shortest paths that are computed using K-shortest path algorithm did not respect the cumulative bounds. The fifth shortest path is valid against the bounds.
- The values for the metrics of the actual path (**TE**, **IGP**, **Cumulative Latency** and **Hop count** values in the **Dynamic** section) are within the configured cumulative metric bounds.

```
Router# show segment-routing traffic-eng policy color 2

Color: 2, End-point: 192.168.0.2
  Name: srte_c_2_ep_192.168.0.2
  Status:
    Admin: up  Operational: up for 3d02h (since Dec 15 12:13:21.993)

  Candidate-paths:

    Preference: 100 (configuration) (active)

      Name: fromAtoB_XTC
      Requested BSID: dynamic
```

```
    Constraints:
      Protection Type: protected-preferred
      Affinity:
        exclude-any:
        red
      Maximum SID Depth: 10
      IGP Metric Bound: 10
      TE Metric Bound: 60
      Latency Metric Bound: 55
      Hopcount Metric Bound: 4

    Dynamic (valid)

      Metric Type: TE,   Path Accumulated Metric: 52
      Number of K-shortest-paths: 4
      TE Cumulative Metric: 52
      IGP Cumulative Metric: 3
      Cumulative Latency: 52
      Hop count: 3
        16004 [Prefix-SID, 192.168.0.4]
        24003 [Adjacency-SID, 16.16.16.2 - 16.16.16.5]
        24001 [Adjacency-SID, 14.14.14.5 - 14.14.14.4]

Attributes:

  Binding SID: 24011
  Forward Class: Not Configured
  Steering labeled-services disabled: no
  Steering BGP disabled: no
  IPv6 caps enable: yes
  Invalidation drop enabled: no
```

# SR-TE BGP Soft Next-Hop Validation For ODN Policies

***Table 37: Feature History Table***

| Feature Name | Release Information | Feature Description |
|---|---|---|
| SR-TE BGP Soft Next-Hop Validation For ODN Policies | Release 7.3.2 | This feature addresses BGP Next-Hop reachability issues through BGP Next-Hop *soft* validation, and also enhances BGP best path selection.<br>New commands:<br>• **nexthop validation color-extcomm disable**<br>• **nexthop validation color-extcomm sr-policy**<br>• **bgp bestpath igp-metric sr-policy** |

Before a BGP router installs a route in the routing table, it checks its own reachability to the Next-Hop (NH) IP address of the route. In an SR-TE domain, a NH address may not be redistributed within the AS, or to a

neighbor AS. So, BGP cannot reach the NH, and does not install the corresponding route into the routing table. The following workarounds are available, but they are tedious and might impact scalability:

1. Enable a non-default, static route to null0 covering the routes
2. Inject the routes into BGP using BGP-Labeled Unicast configuration
3. Redistribute routes between IGP domains

This feature introduces a more optimal design and solution - When you enable an SR policy on the SR-TE headend router, configure the nexthop validation color-extcomm sr-policy command in BGP configuration mode. It instructs BGP that, instead of NH reachability validation of BGP routes, the validation is done for SR policy-installed color NH addresses. When the NH address of such a route is reachable, the route is added to the routing table.

Also, this configuration on the ingress/headend PE router reduces the route scale for NH reachability, and service (VPN) routes automatically get NH reachability.

RR configuration – For intermediate router configuration, enable the RR with the nexthop validation color-extcomm disable command. When enabled, and L3VPN prefixes are associated with a color ID, BGP skips NH validation on the RR.

When the RR has no reachability to the color-extcomm NH, either enable this command, or use a legacy static route.

The following sequence occurs when the headend router receives L3VPN prefixes based on a color ID such as purple, green, etc.

1. The router checks/learns the local SR policy, or requests the ODN SR policy for color ID and NH
2. BGP does validation of the SR policy routes' NH addresses and applies the corresponding NH AD/metric. For a NH with a specific BGP-based color attribute, SR-PCE provides the AD/metric

   With BGP NH reachability, traffic is transported smoothly
3. On the RR, BGP does not validate NH reachability

### BGP Best Path Selection Based On SR Policy Effective Metric

BGP uses an algorithm to select the best path for installing the route in the RIB or for making a choice of which BGP path to propagate. At a certain point in the process, if there is IGP reachability to a BGP NH address, the algorithm chooses the path with the lowest IGP metric as the best path. The SR Policy path metric is not considered even if it has a better metric. This feature addresses the issue.

To ensure that BGP prefers the SR policy path metric over the IGP metric, enable bgp bestpath igp-metric sr-policy in BGP configuration mode.

### Configurations

**Configuring BGP Soft Next-Hop Validation** (Headend Router)

```
Headend # configure
Headend (config) # router bgp 100
Headend (config-bgp)# nexthop validation color-extcomm sr-policy
Headend (config-bgp)# commit
Headend (config-bgp)# end
```

**Configuring BGP Soft Next-Hop Validation** (Route Reflector)

```
RR # configure
RR (config) # router bgp 100
RR (config-bgp)# nexthop validation color-extcomm disable
RR (config-bgp)# commit
RR (config-bgp)# end
```

**Configuring BGP Best Path Selection Based on SR Policy Metric** (Headend Router)

```
Headend # configure
Headend (config) # router bgp 100
Headend (config-bgp)# bgp bestpath igp-metric sr-policy
Headend (config-bgp)# commit
Headend (config-bgp)# end
```

### Verification

Use this command to view BGP Soft Next-Hop Validation details.

```
Headend # show bgp process detail | i Nexthop
Use SR-Policy admin/metric of color-extcomm Nexthop during path comparison: enabled ExtComm
 Color Nexthop validation: SR-Policy then RIB
```

Use this command to view BGP Best Path Selection Based on SR Policy Metric.

```
Headend # show bgp vrf VRF1002 ipv4 unicast 207.77.2.0

BGP routing table entry for 207.77.2.0/24, Route Distinguisher: 18522:1002 Versions:
Process bRIB/RIB SendTblVer
Speaker 5232243 5232243 Paths: (1 available, best #1)
Advertised to CE peers (in unique update groups): 10.11.2.11 101.15.2.2
Path #1: Received by speaker 0

Advertised to CE peers (in unique update groups): 10.11.2.11 101.15.2.2
16611 770
10.1.1.33 C:1129 (bsid:27163) (admin 20) (metric 25) from 10.1.1.100 (10.1.1.33)
Received Label 24007
Origin IGP, localpref 100, valid, internal, best, group-best, import-candidate, imported
Received Path ID 1, Local Path ID 1, version 5232243
Extended community: Color:1129 RT:17933:1002 RT:18522:1002
Originator: 10.1.1.33, Cluster list: 10.1.1.100
SR policy color 1129, up, registered, bsid 27163, if-handle 0x200053dc
Source AFI: VPNv4 Unicast, Source VRF: default, Source Route Distinguisher: 18522:3002
```

### Details

- **10.1.1.33 C:1129** - BGP path is selected based on the SR policy with color ID C:1129
- If no SR policy is up, or if the SR policy metric is not configured, only the RIB metric is displayed
- **admin 20** and **metric 25** are SR policy references

# SR-TE Policy Path Types

A **dynamic** path is based on an optimization objective and a set of constraints. The head-end computes a solution, resulting in a SID-list or a set of SID-lists. When the topology changes, a new path is computed. If the head-end does not have enough information about the topology, the head-end might delegate the computation to a Segment Routing Path Computation Element (SR-PCE). For information on configuring SR-PCE, see *Configure Segment Routing Path Computation Element* chapter.

An **explicit** path is a specified SID-list or set of SID-lists.

An SR-TE policy initiates a single (selected) path in RIB/FIB. This is the preferred valid candidate path. A path is selected when the path is valid and its preference is the best among all candidate paths for that policy.

**Note** The protocol of the source is not relevant in the path selection logic.

A candidate path has the following characteristics:

- It has a preference – If two policies have the same {color, endpoint} but different preferences, the policy with the highest preference is selected.
- It is associated with a single binding SID (BSID) – A BSID conflict occurs when there are different SR policies with the same BSID. In this case, the policy that is installed first gets the BSID and is selected.
- It is valid if it is usable.

# Dynamic Paths

### Behaviors and Limitations

For a dynamic path that traverses a specific interface between nodes (segment), the algorithm may encode this segment using an Adj-SID. The SR-TE process prefers the protected Adj-SID of the link, if one is available. In addition, the SR-TE process prefers a manual protected Adj-SID over a dynamic protected Adj-SID.

You can configure the path to prefer the protected or unprotected Adj-SID, or to use only protected or unprotected Adj-SID. See Segment Protection-Type Constraint, on page 322.

## Optimization Objectives

Optimization objectives allow the head-end router to compute a SID-list that expresses the shortest dynamic path according to the selected metric type:

- IGP metric — Refer to the "Implementing IS-IS" and "Implementing OSPF" chapters in the *Routing Configuration Guide for Cisco ASR 9000 Series Routers*.
- TE metric — See the Configure Interface TE Metrics, on page 320 section for information about configuring TE metrics.

This example shows a dynamic path from head-end router 1 to end-point router 3 that minimizes IGP or TE metric:

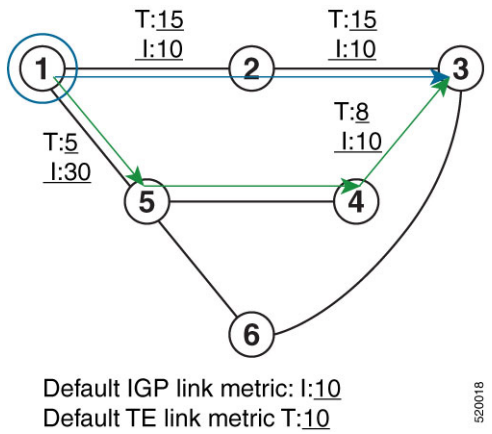


- The blue path uses the minimum IGP metric: Min-Metric (1 → 3, IGP) = SID-list <16003>; cumulative IGP metric: 20
- The green path uses the minimum TE metric: Min-Metric (1 → 3, TE) = SID-list <16005, 16004, 16003>; cumulative TE metric: 23

### Configure Interface TE Metrics

Use the **metric** *value* command in SR-TE interface submode to configure the TE metric for interfaces. The *value* range is from 0 to 2147483647.

```
Router# configure
Router(config)# segment-routing
Router(config-sr)# traffic-eng
Router(config-sr-te)# interface type interface-path-id
Router(config-sr-te-if)# metric value
```

#### Configuring TE Metric: Example

The following configuration example shows how to set the TE metric for various interfaces:

```
segment-routing
 traffic-eng
  interface TenGigE0/0/0/0
   metric 100
  !
  interface TenGigE0/0/0/1
   metric 1000
  !
  interface TenGigE0/0/2/0
   metric 50
  !
 !
end
```

## Constraints

Constraints allow the head-end router to compute a dynamic path according to the selected metric type:

- Affinity — You can apply a color or name to links or interfaces by assigning affinity bit-maps to them. You can then specify an affinity (or relationship) between an SR policy path and link colors. SR-TE computes a path that includes or excludes links that have specific colors,or combinations of colors. See

the Named Interface Link Admin Groups and SR-TE Affinity Maps, on page 321 section for information on named interface link admin groups and SR-TE Affinity Maps.

- Disjoint — SR-TE computes a path that is disjoint from another path in the same disjoint-group. Disjoint paths do not share network resources. Path disjointness may be required for paths between the same pair of nodes, between different pairs of nodes, or a combination (only same head-end or only same end-point).
- Flexible Algorithm — Flexible Algorithm allows for user-defined algorithms where the IGP computes paths based on a user-defined combination of metric type and constraint.
- Protection type — For a dynamic path that traverses a specific interface between nodes (segment), or for an explicit path using IP addresses of intermediate links, the algorithm may encode this segment using an Adj-SID. You can specify the path to prefer protected or unprotected Adj-SIDs, or to use only protected or unprotected Adj-SIDs. See Segment Protection-Type Constraint, on page 322 for information about configuring the protection type.

## Named Interface Link Admin Groups and SR-TE Affinity Maps

Named Interface Link Admin Groups and SR-TE Affinity Maps provide a simplified and more flexible means of configuring link attributes and path affinities to compute paths for SR-TE policies.

In the traditional TE scheme, links are configured with attribute-flags that are flooded with TE link-state parameters using Interior Gateway Protocols (IGPs), such as Open Shortest Path First (OSPF).

Named Interface Link Admin Groups and SR-TE Affinity Maps let you assign, or map, up to 256 color names for affinity and attribute-flag attributes instead of 32-bit hexadecimal numbers. After mappings are defined, the attributes can be referred to by the corresponding color name in the CLI. Furthermore, you can define constraints using *include-any*, *include-all*, and *exclude-any* arguments, where each statement can contain up to 10 colors.

**Note** You can configure affinity constraints using attribute flags or the Flexible Name Based Policy Constraints scheme; however, when configurations for both schemes exist, only the configuration pertaining to the new scheme is applied.

### *Configure Named Interface Link Admin Groups and SR-TE Affinity Maps*

Use the **affinity name** *NAME* command in SR-TE interface submode to assign affinity to interfaces. Configure this on routers with interfaces that have an associated admin group attribute.

```
Router# configure
Router(config)# segment-routing
Router(config-sr)# traffic-eng
Router(config-sr-te)# interface TenGigE0/0/1/2
Router(config-sr-if)# affinity
Router(config-sr-if-affinity)# name RED
```

Use the **affinity-map name** *NAME* **bit-position** *bit-position* command in SR-TE sub-mode to define affinity maps. The *bit-position* range is from 0 to 255.

Configure affinity maps on the following routers:

- Routers with interfaces that have an associated admin group attribute.
- Routers that act as SR-TE head-ends for SR policies that include affinity constraints.

```
Router# configure
Router(config)# segment-routing
Router(config-sr)# traffic-eng
Router(config-sr-te)# affinity-map
Router(config-sr-te-affinity-map)# name RED bit-position 23
```

### Configuring Link Admin Group: Example

The following example shows how to assign affinity to interfaces and to define affinity maps. This configuration is applicable to any router (SR-TE head-end or transit node) with colored interfaces.

```
segment-routing
 traffic-eng
  interface TenGigE0/0/1/1
   affinity
    name CROSS
    name RED
   !
  !
  interface TenGigE0/0/1/2
   affinity
    name RED
   !
  !
  interface TenGigE0/0/2/0
   affinity
    name BLUE
   !
  !
  affinity-map
   name RED bit-position 23
   name BLUE bit-position 24
   name CROSS bit-position 25
  !
end
```

## Segment Protection-Type Constraint

*Table 38: Feature History Table*

| Feature Name | Release Information | Feature Description |
|---|---|---|
| Segment Protection-Type Constraint | Release 7.4.1 | This feature introduces the ability to control whether protected or unprotected segments are used when encoding the SID-list of an SR policy candidate path.<br>The types of segments that could be used when building a SID-list include prefix SIDs and adjacency SIDs. |

This feature introduces the ability to control whether protected or unprotected segments are used when encoding the SID-list of an SR policy candidate path. The types of segments that could be used when building a SID-list include prefix SIDs and adjacency SIDs.

A prefix SID is a global segment representing a prefix that identifies a specific node. A prefix SID is programmed with a backup path computed by the IGP using TI-LFA.

An adjacency SID is a local segment representing an IGP adjacency. An adjacency SID can be programmed with or without protection. Protected adjacency SIDs are programmed with a link-protectant backup path computed by the IGP (TI-LFA) and are used if the link associated with the IGP adjacency fails.

Prefix SIDs and adjacency SIDs can be leveraged as segments in a SID-list in order to forward a packet along a path traversing specific nodes and/or over specific interfaces between nodes. The type of segment used when encoding the SID-list will determine whether failures along the path would be protected by TI-LFA. Depending on the offering, an operator may want to offer either unprotected or protected services over traffic engineered paths.

The following behaviors are available with the segment protection-type constraint:

- **protected-only** — The SID-list must be encoded using protected segments.
- **protected-preferred** — The SID-list should be encoded using protected segments if available; otherwise, the SID-list may be encoded using unprotected Adj-SIDs. This is the default behavior when no segment protection-type constraint is specified.
- **unprotected-only** — The SID-list must be encoded using unprotected Adj-SID.
- **unprotected-preferred** — The SID-list should be encoded using unprotected Adj-SID if available, otherwise SID-list may be encoded using protected segments.

### Usage Guidelines and Limitations

Observe the following guidelines and limitations for the platform:

- This constraint applies to candidate-paths of manual SR policies with either dynamically computed paths or explicit paths.
- This constraint applies to On-Demand SR policy candidate-paths.
- PCEP has been augmented (vendor-specific object) to allow a PCC to indicate the segment protection-type constraint to the PCE.
- When the segment protection type constraint is protected-only or unprotected-only, the path computation must adhere to the constraint. If the constraint is not satisfied, the SR policy will not come up on such candidate path.
- When the segment protection-type constraint is unprotected-only, the entire SID-list must be encoded with unprotected Adj-SIDs.
- When the segment protection-type constraint is protected-only, the entire SID-list must be encoded with protected Adj-SIDs or Prefix SIDs.

### Configuring Segment Protection-Type Constraint

Use the **constraints segments protection** {**protected-only** | **protected-preferred** | **unprotected-only** | **unprotected-preferred**} command to configure the segment protection-type behavior.

The following example shows how to configure the policy with a SID-list that must be encoded using protected segments:

```
Router(config-sr-te)# policy POLICY1
Router(config-sr-te-policy)# color 10 end-point ipv4 10.1.1.4
```

```
Router(config-sr-te-policy)# candidate-paths
Router(config-sr-te-policy-path)# preference 100
Router(config-sr-te-policy-path-pref)# constraints
Router(config-sr-te-path-pref-const)# segments
Router(config-sr-te-path-pref-const-seg)# protection protected-only
```

## Configure SR Policy with Dynamic Path

To configure a SR-TE policy with a dynamic path, optimization objectives, and affinity constraints, complete the following configurations:

1. Define the optimization objectives. See the Optimization Objectives, on page 319 section.
2. Define the constraints. See the Constraints, on page 320 section.
3. Create the policy.

### Behaviors and Limitations

You can configure the path to prefer protected or unprotected segments, or to use only protected or unprotected segments.

### Examples

The following example shows a configuration of an SR policy at an SR-TE head-end router. The policy has a dynamic path with optimization objectives and affinity constraints computed by the head-end router.

```
segment-routing
 traffic-eng
  policy foo
   color 100 end-point ipv4 10.1.1.2
   candidate-paths
    preference 100
     dynamic
      metric
       type te
      !
     !
     constraints
      affinity
       exclude-any
        name RED
       !
      !
     !
    !
   !
  !
```

The following example shows a configuration of an SR policy at an SR-TE head-end router. The policy has a dynamic path with optimization objectives and affinity constraints computed by the SR-PCE.

```
segment-routing
 traffic-eng
  policy baa
   color 101 end-point ipv4 10.1.1.2
   candidate-paths
    preference 100
     dynamic
      pcep
      !
```

```
      metric
       type te
      !
     !
     constraints
      affinity
       exclude-any
        name BLUE
       !
      !
     !
    !
   !
  !
```

The following example shows a configuration of an SR policy at an SR-TE head-end router. The policy has a dynamic path with optimization objective and segment protection-type constraint computed by the head-end router.

```
segment-routing
 traffic-eng
  policy baa
   color 101 end-point ipv4 10.1.1.2
   candidate-paths
    preference 100
     dynamic
      metric
       type te
      !
     !
     constraints
      segments
       protection protected-only
       !
      !
     !
    !
   !
  !
```

The following example shows a configuration of an SR policy at an SR-TE head-end router. The policy has a dynamic path with optimization objective and segment protection-type constraint computed by the SR-PCE.

```
segment-routing
 traffic-eng
  policy baa
   color 101 end-point ipv4 10.1.1.2
   candidate-paths
    preference 100
     dynamic
      pcep
      !
      metric
       type te
      !
     !
     constraints
      segments
       protection protected-only
       !
      !
     !
    !
```

```
!
!
```

## Anycast SID-Aware Path Computation

This feature allows the SR-TE head-end or SR-PCE to compute a path that is encoded using Anycast prefix SIDs of nodes along the path.

An Anycast SID is a type of prefix SID that identifies a set of nodes and is configured with n-flag clear. The set of nodes (Anycast group) is configured to advertise a shared prefix address and prefix SID. Anycast routing enables the steering of traffic toward multiple advertising nodes, providing load-balancing and redundancy. Packets addressed to an Anycast address are forwarded to the topologically nearest nodes.

For more information about this feature, see the *Anycast SID-Aware Path Computation* topic in the *Configure Segment Routing Path Computation Element* chapter.

**Note** For information on configuring Anycast SID, see Configuring a Prefix-SID on the IS-IS Enabled Loopback Interface, on page 216 and Configuring a Prefix-SID on the OSPF-Enabled Loopback Interface, on page 239.

# Explicit Paths

## SR-TE Policy with Explicit Path

An explicit segment list is defined as a sequence of one or more segments. A segment can be configured as an IP address or an MPLS label representing a node or a link.

An explicit segment list can be configured with the following:

- IP-defined segments
- MPLS label-defined segments
- A combination of IP-defined segments and MPLS label-defined segments

### Usage Guidelines and Limitations

- An IP-defined segment can be associated with an IPv4 address (for example, a link or a Loopback address).
- When a segment of the segment list is defined as an MPLS label, subsequent segments can only be configured as MPLS labels.
- You can configure the path to prefer the protected or unprotected Adj-SID, or to use only protected or unprotected Adj-SID. See Segment Protection-Type Constraint, on page 322.

### Configure Local SR-TE Policy Using Explicit Paths

To configure an SR-TE policy with an explicit path, complete the following configurations:

1. Create the segment list.
2. Create the SR-TE policy.

Create a segment list with IPv4 addresses:

```
Router# configure
Router(config)# segment-routing
Router(config-sr)# traffic-eng
Router(config-sr-te)# segment-list name SIDLIST1
Router(config-sr-te-sl)# index 10 mpls adjacency 10.1.1.2
Router(config-sr-te-sl)# index 20 mpls adjacency 10.1.1.3
Router(config-sr-te-sl)# index 30 mpls adjacency 10.1.1.4
Router(config-sr-te-sl)# exit
```

Create a segment list with MPLS labels:

```
Router(config-sr-te)# segment-list name SIDLIST2
Router(config-sr-te-sl)# index 10 mpls label 16002
Router(config-sr-te-sl)# index 20 mpls label 16003
Router(config-sr-te-sl)# index 30 mpls label 16004
Router(config-sr-te-sl)# exit
```

Create a segment list with IPv4 addresses and MPLS labels:

```
Router(config-sr-te)# segment-list name SIDLIST3
Router(config-sr-te-sl)# index 10 mpls adjacency 10.1.1.2
Router(config-sr-te-sl)# index 20 mpls label 16003
Router(config-sr-te-sl)# index 30 mpls label 16004
Router(config-sr-te-sl)# exit
```

Create the SR-TE policy:

```
Router(config-sr-te)# policy POLICY2
Router(config-sr-te-policy)# color 20 end-point ipv4 10.1.1.4
Router(config-sr-te-policy)# candidate-paths
Router(config-sr-te-policy-path)# preference 200
Router(config-sr-te-policy-path-pref)# explicit segment-list SIDLIST2
Router(config-sr-te-pp-info)# exit
Router(config-sr-te-policy-path-pref)# exit
Router(config-sr-te-policy-path)# preference 100
Router(config-sr-te-policy-path-pref)# explicit segment-list SIDLIST1
Router(config-sr-te-pp-info)# exit
Router(config-sr-te-policy-path-pref)# exit
```

### Running Configuration

```
Router# show running-configuration

segment-routing
 traffic-eng
  segment-list SIDLIST1
   index 10 mpls adjacency 10.1.1.2
   index 20 mpls adjacency 10.1.1.3
   index 30 mpls adjacency 10.1.1.4
  !
  segment-list SIDLIST2
   index 10 mpls label 16002
   index 20 mpls label 16003
   index 30 mpls label 16004
  !
  segment-list SIDLIST3
   index 10 mpls adjacency 10.1.1.2
   index 20 mpls label 16003
   index 30 mpls label 16004
```

```
  !
  policy POLICY2
   color 20 end-point ipv4 10.1.1.4
   candidate-paths
    preference 200
     explicit segment-list SIDLIST2
     !
    !
    preference 100
     explicit segment-list SIDLIST1
     !
    !
   !
  !!
!
```

### Verification

Verify the SR-TE policy configuration using:

```
Router# show segment-routing traffic-eng policy name srte_c_20_ep_10.1.1.4

SR-TE policy database
---------------------

Color: 20, End-point: 10.1.1.4
  Name: srte_c_20_ep_10.1.1.4
  Status:
    Admin: up  Operational: up for 00:00:15 (since Jul 14 00:53:10.615)
  Candidate-paths:
    Preference: 200 (configuration) (active)
      Name: POLICY2
      Requested BSID: dynamic
        Protection Type: protected-preferred
        Maximum SID Depth: 8
      Explicit: segment-list SIDLIST2 (active)
        Weight: 1, Metric Type: TE
          16002
          16003
          16004

    Preference: 100 (configuration) (inactive)
      Name: POLICY2
      Requested BSID: dynamic
        Protection Type: protected-preferred
        Maximum SID Depth: 8
      Explicit: segment-list SIDLIST1 (inactive)
        Weight: 1, Metric Type: TE
          [Adjacency-SID, 10.1.1.2 - <None>]
          [Adjacency-SID, 10.1.1.3 - <None>]
          [Adjacency-SID, 10.1.1.4 - <None>]
    Attributes:
    Binding SID: 51301
   Forward Class: Not Configured
    Steering labeled-services disabled: no
    Steering BGP disabled: no
    IPv6 caps enable: yes
    Invalidation drop enabled: no
```

## Configuring Explicit Path with Affinity Constraint Validation

To fully configure SR-TE flexible name-based policy constraints, you must complete these high-level tasks in order:

1. Assign Color Names to Numeric Values
2. Associate Affinity-Names with SR-TE Links
3. Associate Affinity Constraints for SR-TE Policies

```
/* Enter the global configuration mode and assign color names to numeric values
Router# configure
Router(config)# segment-routing
Router(config-sr)# traffic-eng
Router(config-sr-te)# affinity-map
Router(config-sr-te-affinity-map)# blue bit-position 0
Router(config-sr-te-affinity-map)# green bit-position 1
Router(config-sr-te-affinity-map)# red bit-position 2
Router(config-sr-te-affinity-map)# exit


/* Associate affinity-names with SR-TE links
Router(config-sr-te)# interface Gi0/0/0/0
Router(config-sr-te-if)# affinity
Router(config-sr-te-if-affinity)# blue
Router(config-sr-te-if-affinity)# exit
Router(config-sr-te-if)# exit
Router(config-sr-te)# interface Gi0/0/0/1
Router(config-sr-te-if)# affinity
Router(config-sr-te-if-affinity)# blue
Router(config-sr-te-if-affinity)# green
Router(config-sr-te-if-affinity)# exit
Router(config-sr-te-if)# exit
Router(config-sr-te)#


/* Associate affinity constraints for SR-TE policies
Router(config-sr-te)# segment-list name SIDLIST1
Router(config-sr-te-sl)# index 10 mpls adjacency 10.1.1.2
Router(config-sr-te-sl)# index 20 mpls adjacency 2.2.2.23
Router(config-sr-te-sl)# index 30 mpls adjacency 10.1.1.4
Router(config-sr-te-sl)# exit
Router(config-sr-te)# segment-list name SIDLIST2
Router(config-sr-te-sl)# index 10 mpls adjacency 10.1.1.2
Router(config-sr-te-sl)# index 30 mpls adjacency 10.1.1.4
Router(config-sr-te-sl)# exit
Router(config-sr-te)# segment-list name SIDLIST3
Router(config-sr-te-sl)# index 10 mpls adjacency 10.1.1.5
Router(config-sr-te-sl)# index 30 mpls adjacency 10.1.1.4
Router(config-sr-te-sl)# exit

Router(config-sr-te)# policy POLICY1
Router(config-sr-te-policy)# color 20 end-point ipv4 10.1.1.4
Router(config-sr-te-policy)# binding-sid mpls 1000
Router(config-sr-te-policy)# candidate-paths
Router(config-sr-te-policy-path)# preference 200
Router(config-sr-te-policy-path-pref)# constraints affinity exclude-any red
Router(config-sr-te-policy-path-pref)# explicit segment-list SIDLIST1
```

```
Router(config-sr-te-pp-info)# exit
Router(config-sr-te-policy-path-pref)# explicit segment-list SIDLIST2
Router(config-sr-te-pp-info)# exit
Router(config-sr-te-policy-path-pref)# exit
Router(config-sr-te-policy-path)# preference 100
Router(config-sr-te-policy-path-pref)# explicit segment-list SIDLIST3
```

### Running Configuration

```
Router# show running-configuration
segment-routing
 traffic-eng

  interface GigabitEthernet0/0/0/0
   affinity
    blue
   !
  !
  interface GigabitEthernet0/0/0/1
   affinity
    blue
    green
   !
  !


  segment-list name SIDLIST1
   index 10 mpls adjacency 10.1.1.2
   index 20 mpls adjacency 2.2.2.23
   index 30 mpls adjacency 10.1.1.4
  !
  segment-list name SIDLIST2
   index 10 mpls adjacency 10.1.1.2
   index 30 mpls adjacency 10.1.1.4
  !
  segment-list name SIDLIST3
   index 10 mpls adjacency 10.1.1.5
   index 30 mpls adjacency 10.1.1.4
  !
  policy POLICY1
   binding-sid mpls 1000
   color 20 end-point ipv4 10.1.1.4
   candidate-paths
    preference 100
     explicit segment-list SIDLIST3
     !
    !
    preference 200
     explicit segment-list SIDLIST1
     !
     explicit segment-list SIDLIST2
     !
     constraints
      affinity
       exclude-any
        red
       !
      !
     !
    !
   !
  !
  affinity-map
```

```
    blue bit-position 0
    green bit-position 1
    red bit-position 2
   !
  !
!
```

## Explicit Path with Affinity Constraint Validation for Anycast SIDs

**Note** For information about configuring Anycast SIDs, see Configuring a Prefix-SID on the IS-IS Enabled Loopback Interface, on page 216 or Configuring a Prefix-SID on the OSPF-Enabled Loopback Interface, on page 239.

Routers that are configured with the same Anycast SID, on the same Loopback address and with the same SRGB, advertise the same prefix SID (Anycast).

The shortest path with the lowest IGP metric is then verified against the affinity constraints. If multiple nodes have the same shortest-path metric, all their paths are validated against the affinity constraints. A path that is not the shortest path is not validated against the affinity constraints.

### Affinity Support for Anycast SIDs: Examples

In the following examples, nodes 3 and 5 advertise the same Anycast prefix (10.1.1.8) and assign the same prefix SID (16100).

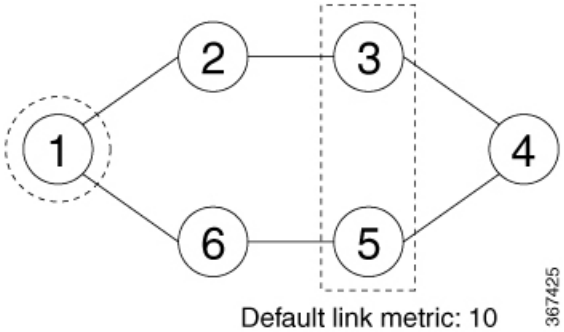


Node 1 uses the following SR-TE policy:

```
segment-routing
 traffic-eng
  policy POLICY1
   color 20 end-point ipv4 10.1.1.4
   binding-sid mpls 1000
   candidate-paths
    preference 100
     explicit segment-list SIDLIST1
     constraints
      affinity
       exclude-any
        red
  segment-list name SIDLIST1
   index 10 address ipv4 100.100.100.100
   index 20 address ipv4 4.4.4.4
```

### Affinity Constraint Validation With ECMP Anycast SID: Example

In this example, the shortest path to both node 3 and node 5 has an equal accumulative IGP metric of 20. Both paths are validated against affinity constraints.

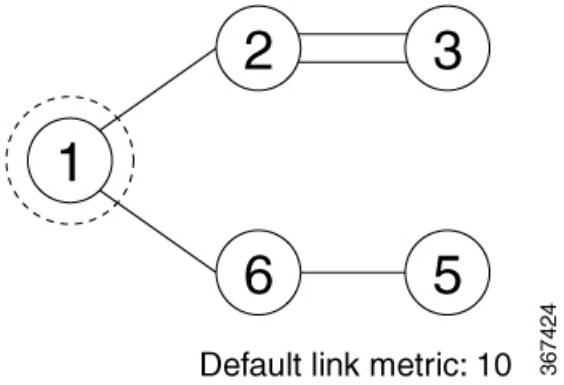


```
Name: POLICY1 (Color: 2, End-point: 198.51.100.6)
  Status:
    Admin: up  Operational: up for 00:03:52 (since Jan 24 01:52:14.215)
  Candidate-paths:
    Preference 100:
      Constraints:
        Affinity:
          exclude-any: red
      Explicit: segment-list SIDLIST1 (active)
        Weight: 0, Metric Type: IGP
          16100 [Prefix-SID, 10.1.1.8]
          16004 [Prefix-SID, 4.4.4.4]
```

### Affinity Constraint Validation With Non-ECMP Anycast SID: Example

In this example, the shortest path to node 5 has an accumulative IGP metric of 20, and the shortest path to node 3 has an accumulative IGP metric of 30. Only the shortest path to node 5 is validated against affinity constraints.

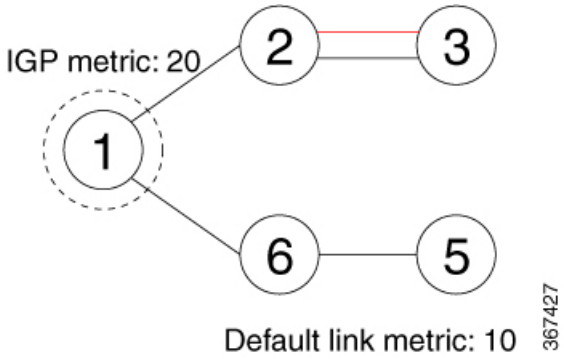


**Note** Even though parallel link (23) is marked with red, it is still considered valid since anycast traffic flows only on the path to node 5.

### Invalid Path Based on Affinity Constraint: Example

In this example, parallel link (23) is marked as red, so the path to anycast node 3 is invalidated.

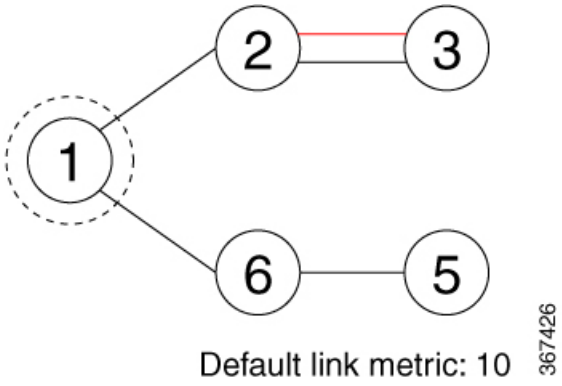


```
SR-TE policy database
---------------------
Name: POLICY1 (Color: 2, End-point: 198.51.100.6)
  Status:
    Admin: up  Operational: up for 00:03:52 (since Jan 24 01:52:14.215)
  Candidate-paths:
    Preference 100:
      Constraints:
        Affinity:
          exclude-any: red
      Explicit: segment-list SIDLIST1 (inactive)
      Inactive Reason: Link [2.2.21.23,2.2.21.32] failed to satisfy affinity exclude-any
constraint=0x00000008, link attributes=0x0000000A
```

## Configure Explicit Path with Segment Protection-Type Constraint

For an SR policy with an explicit path that includes IP addresses of links, the SR-TE process encodes these segments using the corresponding adjacency SID (Adj-SID) for each link. The type of Adj-SID used (protected or unprotected) is determined by the segment protection-type constraint configured under the SR policy. See the Segment Protection-Type Constraint, on page 322.

### Configure Local SR-TE Policy Using Explicit Paths

Create a segment list with IP addresses:

```
Router# configure
Router(config)# segment-routing
Router(config-sr)# traffic-eng
Router(config-sr-te)# segment-list name SIDLIST1
Router(config-sr-te-sl)# index 10 mpls adjacency 10.1.1.2
Router(config-sr-te-sl)# index 20 mpls adjacency 10.1.1.3
Router(config-sr-te-sl)# index 30 mpls adjacency 10.1.1.4
Router(config-sr-te-sl)# exit
```

Create the SR-TE policy with segment protection-type constraint:

```
Router(config-sr-te)# policy POLICY1
Router(config-sr-te-policy)# color 20 end-point ipv4 10.1.1.4
Router(config-sr-te-policy)# candidate-paths
Router(config-sr-te-policy-path)# preference 100
Router(config-sr-te-policy-path-pref)# explicit segment-list SIDLIST1
```

```
Router(config-sr-te-pp-info)# exit
Router(config-sr-te-policy-path-pref)# constraints
Router(config-sr-te-path-pref-const)# segments
Router(config-sr-te-path-pref-const-seg)# protection protected-only
Router(config-sr-te-path-pref-const-seg)# commit
```

#### Running Configuration

```
Router# show running-configuration
segment-routing
 traffic-eng
  segment-list SIDLIST1
   index 10 mpls adjacency 10.1.1.2
   index 20 mpls adjacency 10.1.1.3
   index 30 mpls adjacency 10.1.1.4
  !

  policy POLICY1
   color 10 end-point ipv4 10.1.1.4
   candidate-paths
    preference 100
     explicit segment-list SIDLIST1
     !
    constraints
     segments
      protection protected-only
     !
    !
  !
```

# Protocols

## Path Computation Element Protocol

The path computation element protocol (PCEP) describes a set of procedures by which a path computation client (PCC) can report and delegate control of head-end label switched paths (LSPs) sourced from the PCC to a PCE peer. The PCE can request the PCC to update and modify parameters of LSPs it controls. The stateful model also enables a PCC to allow the PCE to initiate computations allowing the PCE to perform network-wide orchestration.

### Configure the Head-End Router as PCEP PCC

Configure the head-end router as PCEP Path Computation Client (PCC) to establish a connection to the PCE. The PCC and PCE addresses must be routable so that TCP connection (to exchange PCEP messages) can be established between PCC and PCE.

#### Configure the PCC to Establish a Connection to the PCE

Use the **segment-routing traffic-eng pcc** command to configure the PCC source address, the SR-PCE address, and SR-PCE options.

A PCE can be given an optional precedence. If a PCC is connected to multiple PCEs, the PCC selects a PCE with the lowest precedence value. If there is a tie, a PCE with the highest IP address is chosen for computing path. The precedence *value* range is from 0 to 255.

```
Router(config)# segment-routing
Router(config-sr)# traffic-eng
Router(config-sr-te)# pcc
Router(config-sr-te-pcc)# source-address ipv4 local-source-address
Router(config-sr-te-pcc)# pce address ipv4 PCE-address[precedence value]
Router(config-sr-te-pcc)# pce address ipv4 PCE-address[keychain WORD]
```

### Configure PCEP-Related Timers

Use the **timers keepalive** command to specify how often keepalive messages are sent from PCC to its peers. The range is from 0 to 255 seconds; the default value is 30.

```
Router(config-sr-te-pcc)# timers keepalive seconds
```

Use the **timers deadtimer** command to specify how long the remote peers wait before bringing down the PCEP session if no PCEP messages are received from this PCC. The range is from 1 to 255 seconds; the default value is 120.

```
Router(config-sr-te-pcc)# timers deadtimer seconds
```

Use the **timers delegation-timeout** command to specify how long a delegated SR policy can remain up without an active connection to a PCE. The range is from 0 to 3600 seconds; the default value is 60.

```
Router(config-sr-te-pcc)# timers delegation-timeout seconds
```

#### PCE-Initiated SR Policy Timers

Use the **timers initiated orphans** command to specify the amount of time that a PCE-initiated SR policy will remain delegated to a PCE peer that is no longer reachable by the PCC. The range is from 10 to 180 seconds; the default value is 180.

```
Router(config-sr-te-pcc)# timers initiated orphans seconds
```

Use the **timers initiated state** command to specify the amount of time that a PCE-initiated SR policy will remain programmed while not being delegated to any PCE. The range is from 15 to 14440 seconds (24 hours); the default value is 600.

```
Router(config-sr-te-pcc)# timers initiated state seconds
```

To better understand how the PCE-initiated SR policy timers operate, consider the following example:

- PCE A instantiates SR policy P at head-end N.
- Head-end N delegates SR policy P to PCE A and programs it in forwarding.
- If head-end N detects that PCE A is no longer reachable, then head-end N starts the PCE-initiated **orphan** and **state** timers for SR policy P.
- If PCE A reconnects before the **orphan** timer expires, then SR policy P is automatically delegated back to its original PCE (PCE A).
- After the **orphan** timer expires, SR policy P will be eligible for delegation to any other surviving PCE(s).
- If SR policy P is not delegated to another PCE before the **state** timer expires, then head-end N will remove SR policy P from its forwarding.

### Enable SR-TE SYSLOG Alarms

Use the **logging policy status** command to enable SR-TE related SYSLOG alarms.

```
Router(config-sr-te)# logging policy status
```

### Enable PCEP Reports to SR-PCE

Use the **report-all** command to enable the PCC to report all SR policies in its database to the PCE.

```
Router(config-sr-te-pcc)# report-all
```

### Customize MSD Value at PCC

Use the **maximum-sid-depth** *value* command to customize the Maximum SID Depth (MSD) signaled by PCC during PCEP session establishment.

The default MSD *value* is equal to the maximum MSD supported by the platform (10).

```
Router(config-sr-te)# maximum-sid-depth value
```

For cases with path computation at PCE, a PCC can signal its MSD to the PCE in the following ways:

- During PCEP session establishment – The signaled MSD is treated as a node-wide property.
  - MSD is configured under **segment-routing traffic-eng maximum-sid-depth** *value* command
- During PCEP LSP path request – The signaled MSD is treated as an LSP property.
  - On-demand (ODN) SR Policy: MSD is configured using the **segment-routing traffic-eng on-demand color** *color* **maximum-sid-depth** *value* command
  - Local SR Policy: MSD is configured using the **segment-routing traffic-eng policy** *WORD* **candidate-paths preference** *preference* **dynamic metric sid-limit** *value* command.

**Note** If the configured MSD values are different, the per-LSP MSD takes precedence over the per-node MSD.

After path computation, the resulting label stack size is verified against the MSD requirement.

- If the label stack size is larger than the MSD and path computation is performed by PCE, then the PCE returns a "no path" response to the PCC.
- If the label stack size is larger than the MSD and path computation is performed by PCC, then the PCC will not install the path.

**Note** A sub-optimal path (if one exists) that satisfies the MSD constraint could be computed in the following cases:

- For a dynamic path with TE metric, when the PCE is configured with the **pce segment-routing te-latency** command or the PCC is configured with the **segment-routing traffic-eng te-latency** command.
- For a dynamic path with LATENCY metric
- For a dynamic path with affinity constraints

For example, if the PCC MSD is 4 and the optimal path (with an accumulated metric of 100) requires 5 labels, but a sub-optimal path exists (with accumulated metric of 110) requiring 4 labels, then the sub-optimal path is installed.

### Customize the SR-TE Path Calculation

Use the **te-latency** command to enable ECMP-aware path computation for TE metric.

```
Router(config-sr-te)# te-latency
```

**Note** ECMP-aware path computation is enabled by default for IGP and LATENCY metrics.

### Configure PCEP Redundancy Type

Use the **redundancy pcc-centric** command to enable PCC-centric high-availability model. The PCC-centric model changes the default PCC delegation behavior to the following:

- After LSP creation, LSP is automatically delegated to the PCE that computed it.
- If this PCE is disconnected, then the LSP is redelegated to another PCE.
- If the original PCE is reconnected, then the delegation fallback timer is started. When the timer expires, the LSP is redelegated back to the original PCE, even if it has worse preference than the current PCE.

```
Router(config-sr-te-pcc)# redundancy pcc-centric
```

### Configuring Head-End Router as PCEP PCC and Customizing SR-TE Related Options: Example

The following example shows how to configure an SR-TE head-end router with the following functionality:

- Enable the SR-TE head-end router as a PCEP client (PCC) with 3 PCEP servers (PCE) with different precedence values. The PCE with IP address 10.1.1.57 is selected as BEST.
- Enable SR-TE related syslogs.
- Set the Maximum SID Depth (MSD) signaled during PCEP session establishment to 5.
- Enable PCEP reporting for all policies in the node.

```
segment-routing
 traffic-eng
  pcc
```

```
    source-address ipv4 10.1.1.2
    pce address ipv4 10.1.1.57
     precedence 150
     password clear <password>
    !
    pce address ipv4 10.1.1.58
     precedence 200
     password clear <password>
    !
    pce address ipv4 10.1.1.59
     precedence 250
     password clear <password>
    !
   !
   logging
    policy status
   !
   maximum-sid-depth 5
   pcc
    report-all
   !
  !
!
end
```

## Verification

```
RP/0/RSP0/CPU0:Router# show segment-routing traffic-eng pcc ipv4 peer

PCC's peer database:
--------------------

Peer address: 10.1.1.57, Precedence: 150, (best PCE)
  State up
  Capabilities: Stateful, Update, Segment-Routing, Instantiation

Peer address: 10.1.1.58, Precedence: 200
  State up
  Capabilities: Stateful, Update, Segment-Routing, Instantiation

Peer address: 10.1.1.59, Precedence: 250
  State up
  Capabilities: Stateful, Update, Segment-Routing, Instantiation
```

# Configure SR-TE PCE Groups

*Table 39: Feature History Table*

| Feature Name | Release | Description |
|---|---|---|
| SR-TE PCE Groups | Release 7.3.2 | This feature allows an SR policy to be delegated to a set of PCE servers configured under a PCE group. Multiple PCE groups can be configured to allow SR policies on the same head-end to be delegated to different sets of PCEs.<br><br>With this functionality, an operator can designate sets of PCEs for various purposes, such as PCE-per-service-type or PCE-per-wholesale-customers. |

This feature allows an SR policy to be delegated or reported to a set of PCE servers configured under a PCE group. Multiple PCE groups can be configured to allow different SR policies on the same head-end to be delegated or reported to different sets of PCEs.

With this functionality, an operator can designate sets of PCEs for various purposes, such as PCE-per-service-type or PCE-per-wholesale-customer.

In the figure below, Router A has a PCEP session with 5 PCEs. The PCEs are configured over 3 PCE groups. PCE1 is in the “default” group. PCE2 and PCE3 are in the RED group. PCE4 and PCE5 are in the BLUE group.

*Figure 20: Example: PCE Groups*

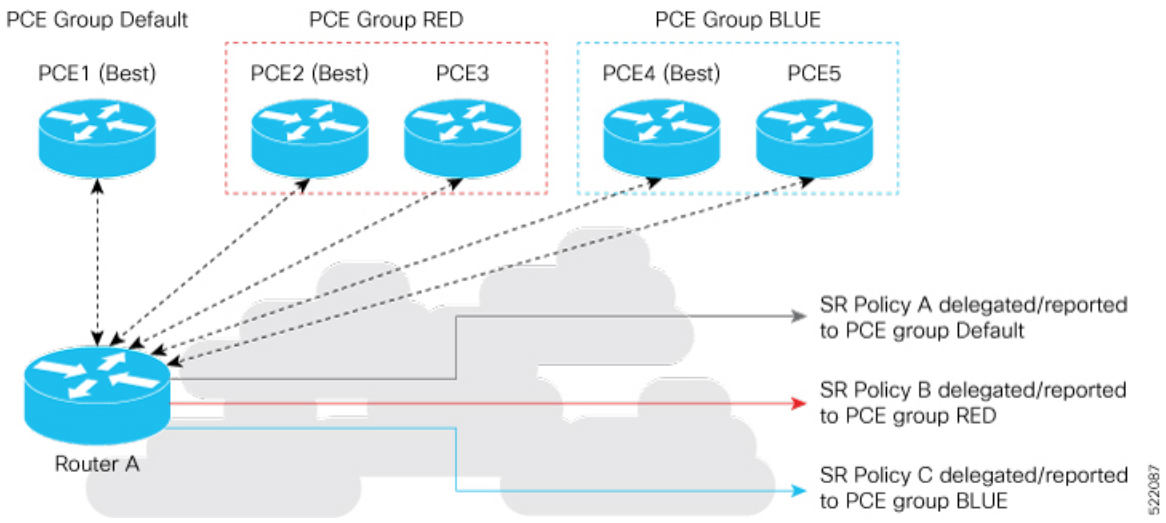


In case of PCE failure, each candidate path is re-delegated to the next-best PCE within the same PCE group. For example, if the best PCE in the RED group (PCE2) fails, then all candidate paths in the RED group fallback to the secondary PCE in the RED group (PCE3). If all the PCEs in the RED group fail, then all candidate paths in the RED group become undelegated; they are not delegated to the PCEs in the BLUE group. If there

are no more available PCEs in the given PCE group, then the outcome is the same as when there are no available PCEs.

### Configure PCE Groups

Use the **segment-routing traffic-eng pcc pce address** {**ipv4** *ipv4_addr* | **ipv6** *ipv6_addr*} **pce-group** *WORD* command to configure the PCE groups.

The following example shows how to configure the PCE groups

- PCE1 in the “default” group
- PCE2 and PCE3 in the “red” group
- PCE4 and PCE5 in the “blue” group

```
Router(config)# segment-routing traffic-eng pcc
Router(config-sr-te-pcc)# pce address ipv4 10.1.1.1
Router(config-pcc-pce)# precedence 10
Router(config-pcc-pce)# exit

Router(config-sr-te-pcc)# pce address ipv4 2.2.2.2
Router(config-pcc-pce)# precedence 20
Router(config-pcc-pce)# pce-group red
Router(config-pcc-pce)# exit

Router(config-sr-te-pcc)# pce address ipv4 3.3.3.3
Router(config-pcc-pce)# precedence 30
Router(config-pcc-pce)# pce-group red
Router(config-pcc-pce)# exit

Router(config-sr-te-pcc)# pce address ipv4 4.4.4.4
Router(config-pcc-pce)# precedence 40
Router(config-pcc-pce)# pce-group blue
Router(config-pcc-pce)# exit

Router(config-sr-te-pcc)# pce address ipv4 5.5.5.5
Router(config-pcc-pce)# precedence 50
Router(config-pcc-pce)# pce-group blue
Router(config-pcc-pce)# exit
```

### Verification

```
segment-routing
 traffic-eng
  pcc
   pce address ipv4 10.1.1.1
    precedence 10
   !
   pce address ipv4 2.2.2.2
    precedence 20
    pce-group red
   !
   pce address ipv4 3.3.3.3
    precedence 30
    pce-group red
   !
   pce address ipv4 4.4.4.4
    precedence 40
    pce-group blue
```

```
    !
    pce address ipv4 5.5.5.5
     precedence 50
     pce-group blue
    !
   !
  !
 !
```

### Assign PCE Group to a Candidate Path or ODN Template

Use the **segment-routing traffic-eng policy** *policy* **pce-group** *WORD* command to assign the PCE group to all candidate paths of an SR policy.

Use the **segment-routing traffic-eng policy** *policy* **candidate-paths preference** *pref* **pce-group** *WORD* command to assign the PCE group to a specific candidate path of an SR policy.

Use the **segment-routing traffic-eng on-demand color** *color* **pce-group** *WORD* command to assign the PCE group to on-demand candidate paths triggered by an ODN template.

**Note** Only one PCE group can be attached to a given SR policy candidate path.

The following example shows how to configure a policy with all candidate paths delegated/reported to PCEs in the default group:

```
Router(config)# segment-routing traffic-eng
Router(config-sr-te)# policy A
Router(config-sr-te-policy)# color 100 end-point ipv4 192.168.0.2
Router(config-sr-te-policy)# candidate-paths
Router(config-sr-te-policy-path)# preference 100
Router(config-sr-te-policy-path-pref)# dynamic
Router(config-sr-te-pp-info)# pcep
Router(config-sr-te-path-pcep)# exit
Router(config-sr-te-pp-info)# exit
Router(config-sr-te-policy-path-pref)# exit
Router(config-sr-te-policy-path)# exit
Router(config-sr-te-policy)# exit
```

The following example shows how to configure a policy with all candidate paths delegated/reported to PCEs in the red group:

```
Router(config-sr-te)# policy B
Router(config-sr-te-policy)# color 100 end-point ipv4 192.168.0.3
Router(config-sr-te-policy)# pce-group red
Router(config-sr-te-policy)# candidate-paths
Router(config-sr-te-policy-path)# preference 100
Router(config-sr-te-policy-path-pref)# dynamic
Router(config-sr-te-pp-info)# pcep
Router(config-sr-te-path-pcep)# exit
Router(config-sr-te-pp-info)# exit
Router(config-sr-te-policy-path-pref)# exit
Router(config-sr-te-policy-path)# exit
Router(config-sr-te-policy)# exit
```

The following example shows how to configure a policy with a specific candidate path (explicit path) reported to PCEs in the blue group:

```
Router(config-sr-te)# policy C
Router(config-sr-te-policy)# color 100 end-point ipv4 192.168.0.4
Router(config-sr-te-policy)# candidate-paths
Router(config-sr-te-policy-path)# preference 100
Router(config-sr-te-policy-path-pref)# pce-group blue
Router(config-sr-te-policy-path-pref)# explicit segment-list SLA
Router(config-sr-te-pp-info)# exit
Router(config-sr-te-policy-path-pref)# exit
Router(config-sr-te-policy-path)# exit
Router(config-sr-te-policy)# exit
```

The following example shows how to configure an ODN template with on-demand candidate paths delegated/reported to PCEs in the blue group:

```
Router(config-sr-te)# on-demand color 10
Router(config-sr-te-color)# pce-group blue
Router(config-sr-te-color)# dynamic
Router(config-sr-te-color-dyn)#pcep
Router(config-sr-te-color-dyn-pce)#
```

### Running Config

```
segment-routing
 traffic-eng
  on-demand color 10
   dynamic
    pcep
    !
   !
   pce-group blue
  !
  policy A
   color 100 end-point ipv4 192.168.0.2
   candidate-paths
    preference 100
     dynamic
      pcep
      !
     !
    !
   !
  policy B
   color 100 end-point ipv4 192.168.0.3
   pce-group red
   candidate-paths
    preference 100
     dynamic
      pcep
      !
     !
    !
   !
  policy C
   color 100 end-point ipv4 192.168.0.4
   candidate-paths
    preference 100
     explicit segment-list SLA
     !
     pce-group blue
    !
```

```
    !
   !
  !
 !
end
```

### Verification

```
Router# show segment-routing traffic-eng pcc ipv4 peer

PCC's peer database:
--------------------

Peer address: 10.1.1.1
  Precedence: 10 (best PCE)
  State up
  Capabilities: Stateful, Update, Segment-Routing, Instantiation

Peer address: 2.2.2.2
  Group: red, Precedence 20
  State up
  Capabilities: Stateful, Update, Segment-Routing, Instantiation

Peer address: 3.3.3.3
  Group: red, Precedence 30
  State up
  Capabilities: Stateful, Update, Segment-Routing, Instantiation

Peer address: 4.4.4.4
  Group: blue, Precedence 40
  State up
  Capabilities: Stateful, Update, Segment-Routing, Instantiation

Peer address: 5.5.5.5
  Group: blue, Precedence 50
  State up
  Capabilities: Stateful, Update, Segment-Routing, Instantiation


Router# show segment-routing traffic-eng policy name srte_c_100_ep_192.168.0.3

SR-TE policy database
---------------------

Color: 100, End-point: 192.168.0.3
  Name: srte_c_100_ep_192.168.0.3
  Status:
    Admin: up  Operational: up for 00:13:26 (since Sep 17 22:52:48.365)
  Candidate-paths:
    Preference: 100 (configuration)
      Name: B
      Requested BSID: dynamic
      PCC info:
        Symbolic name: cfg_B_discr_100
        PLSP-ID: 2
        Protection Type: protected-preferred
        Maximum SID Depth: 10
       PCE Group: red
       Dynamic (pce 192.168.1.4) (valid)
        Metric Type: TE,   Path Accumulated Metric: 10
  Attributes:
    Forward Class: 0
    Steering labeled-services disabled: no
    Steering BGP disabled: no
```

```
IPv6 caps enable: no
Invalidation drop enabled: no
```

# BGP SR-TE

BGP may be used to distribute SR Policy candidate paths to an SR-TE head-end. Dedicated BGP SAFI and NLRI have been defined to advertise a candidate path of an SR Policy. The advertisement of Segment Routing policies in BGP is documented in the IETF draft https://datatracker.ietf.org/doc/draft-ietf-idr-segment-routing-te-policy/

SR policies with IPv4 and IPv6 end-points can be advertised over BGPv4 or BGPv6 sessions between the SR-TE controller and the SR-TE headend.

The Cisco IOS-XR implementation supports the following combinations:

- IPv4 SR policy advertised over BGPv4 session
- IPv6 SR policy advertised over BGPv4 session
- IPv4 SR policy advertised over BGPv6 session
- IPv6 SR policy advertised over BGPv6 session

## Configure BGP SR Policy Address Family at SR-TE Head-End

Perform this task to configure BGP SR policy address family at SR-TE head-end:

### SUMMARY STEPS

1. **configure**
2. **router bgp** *as-number*
3. **bgp router-id** *ip-address*
4. **address-family** {**ipv4** | **ipv6**} **sr-policy**
5. **exit**
6. **neighbor** *ip-address*
7. **remote-as** *as-number*
8. **address-family** {**ipv4** | **ipv6**} **sr-policy**
9. **route-policy** *route-policy-name* {**in** | **out**}

### DETAILED STEPS

| | Command or Action | Purpose |
|---|---|---|
| **Step 1** | **configure** | |
| **Step 2** | **router bgp** *as-number*<br>**Example:**<br>`RP/0/RSP0/CPU0:router(config)# router bgp 65000` | Specifies the BGP AS number and enters the BGP configuration mode, allowing you to configure the BGP routing process. |
| **Step 3** | **bgp router-id** *ip-address*<br>**Example:** | Configures the local router with a specified router ID. |

| | Command or Action | Purpose |
|---|---|---|
| | `RP/0/RSP0/CPU0:router(config-bgp)# bgp router-id 10.1.1.1` | |
| **Step 4** | **address-family** {**ipv4** \| **ipv6**} **sr-policy**<br>**Example:**<br>`RP/0/RSP0/CPU0:router(config-bgp)# address-family ipv4 sr-policy` | Specifies either the IPv4 or IPv6 address family and enters address family configuration submode. |
| **Step 5** | **exit** | |
| **Step 6** | **neighbor** *ip-address*<br>**Example:**<br>`RP/0/RSP0/CPU0:router(config-bgp)# neighbor 10.10.0.1` | Places the router in neighbor configuration mode for BGP routing and configures the neighbor IP address as a BGP peer. |
| **Step 7** | **remote-as** *as-number*<br>**Example:**<br>`RP/0/RSP0/CPU0:router(config-bgp-nbr)# remote-as 1` | Creates a neighbor and assigns a remote autonomous system number to it. |
| **Step 8** | **address-family** {**ipv4** \| **ipv6**} **sr-policy**<br>**Example:**<br>`RP/0/RSP0/CPU0:router(config-bgp-nbr)# address-family ipv4 sr-policy` | Specifies either the IPv4 or IPv6 address family and enters address family configuration submode. |
| **Step 9** | **route-policy** *route-policy-name* {**in** \| **out**}<br>**Example:**<br>`RP/0/RSP0/CPU0:router(config-bgp-nbr-af)# route-policy pass out` | Applies the specified policy to IPv4 or IPv6 unicast routes. |

### Example: BGP SR-TE with BGPv4 Neighbor to BGP SR-TE Controller

The following configuration shows the an SR-TE head-end with a BGPv4 session towards a BGP SR-TE controller. This BGP session is used to signal both IPv4 and IPv6 SR policies.

```
router bgp 65000
bgp router-id 10.1.1.1
 !
 address-family ipv4 sr-policy
 !
 address-family ipv6 sr-policy
 !
```

```
 neighbor 10.1.3.1
  remote-as 10
  description *** eBGP session to BGP SRTE controller ***
  address-family ipv4 sr-policy
   route-policy pass in
   route-policy pass out
  !
  address-family ipv6 sr-policy
   route-policy pass in
   route-policy pass out
  !
 !
!
```

**Example: BGP SR-TE with BGPv6 Neighbor to BGP SR-TE Controller**

The following configuration shows an SR-TE head-end with a BGPv6 session towards a BGP SR-TE controller. This BGP session is used to signal both IPv4 and IPv6 SR policies.

```
router bgp 65000
bgp router-id 10.1.1.1
 address-family ipv4 sr-policy
 !
 address-family ipv6 sr-policy
 !
 neighbor 3001::10:1:3:1
  remote-as 10
  description *** eBGP session to BGP SRTE controller ***
  address-family ipv4 sr-policy
   route-policy pass in
   route-policy pass out
  !
  address-family ipv6 sr-policy
   route-policy pass in
   route-policy pass out
  !
 !
!
```

# Traffic Steering

## Automated Steering

Automated steering (AS) allows service traffic to be automatically steered onto the required transport SLA path programmed by an SR policy.

With AS, BGP automatically steers traffic onto an SR Policy based on the next-hop and color of a BGP service route. The color of a BGP service route is specified by a color extended community attribute. This color is used as a transport SLA indicator, such as min-delay or min-cost.

When the next-hop and color of a BGP service route matches the end-point and color of an SR Policy, BGP automatically installs the route resolving onto the BSID of the matching SR Policy. Recall that an SR Policy on a head-end is uniquely identified by an end-point and color.

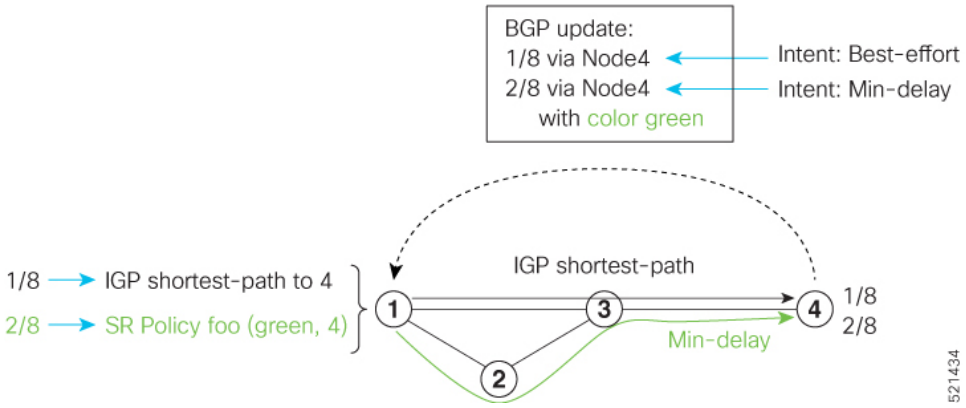


When a BGP route has multiple extended-color communities, each with a valid SR Policy, the BGP process installs the route on the SR Policy giving preference to the color with the highest numerical value.

The granularity of AS behaviors can be applied at multiple levels, for example:

- At a service level—When traffic destined to all prefixes in a given service is associated to the same transport path type. All prefixes share the same color.
- At a destination/prefix level—When traffic destined to a prefix in a given service is associated to a specific transport path type. Each prefix could be assigned a different color.
- At a flow level—When flows destined to the same prefix are associated with different transport path types

AS behaviors apply regardless of the instantiation method of the SR policy, including:

- On-demand SR policy
- Manually provisioned SR policy
- PCE-initiated SR policy

See the Verifying BGP VRF Information, on page 287 and Verifying Forwarding (CEF) Table, on page 288 sections for sample output that shows AS implementation.

# Color-Only Automated Steering

Color-only steering is a traffic steering mechanism where a policy is created with given color, regardless of the endpoint.

You can create an SR-TE policy for a specific color that uses a NULL end-point (0.0.0.0 for IPv4 NULL, and ::0 for IPv6 NULL end-point). This means that you can have a single policy that can steer traffic that is based on that color and a NULL endpoint for routes with a particular color extended community, but different destinations (next-hop).

**Note** Every SR-TE policy with a NULL end-point must have an explicit path-option. The policy cannot have a dynamic path-option (where the path is computed by the head-end or PCE) since there is no destination for the policy.

You can also specify a color-only (CO) flag in the color extended community for overlay routes. The CO flag allows the selection of an SR-policy with a matching color, regardless of endpoint Sub-address Family Identifier (SAFI) (IPv4 or IPv6). See Setting CO Flag, on page 348.

### Configure Color-Only Steering

```
Router# configure
Router(config)# segment-routing
Router(config-sr)# traffic-eng
Router(config-sr-te)# policy P1
Router(config-sr-te-policy)# color 1 end-point ipv4 0.0.0.0

Router# configure
Router(config)# segment-routing
Router(config-sr)# traffic-eng
Router(config-sr-te)# policy P2
Router(config-sr-te-policy)# color 2 end-point ipv6 ::0


Router# show running-configuration
segment-routing
 traffic-eng
  policy P1
   color 1 end-point ipv4 0.0.0.0
  !
  policy P2
   color 2 end-point ipv6 ::
  !
 !
!
end
```

## Setting CO Flag

The BGP-based steering mechanism matches BGP color and next-hop with that of an SR-TE policy. If the policy does not exist, BGP requests SR-PCE to create an SR-TE policy with the associated color, end-point, and explicit paths. For color-only steering (NULL end-point), you can configure a color-only (CO) flag as part of the color extended community in BGP.

**Note** See Color-Only Automated Steering, on page 347 for information about color-only steering (NULL end-point).

The behavior of the steering mechanism is based on the following values of the CO flags:

| | |
|---|---|
| **co-flag 00** | **1.** The BGP next-hop and color <N, C> is matched with an SR-TE policy of same <N, C>.<br>**2.** If a policy does not exist, then IGP path for the next-hop N is chosen. |

| | |
|---|---|
| **co-flag 01** | **1.** The BGP next-hop and color <N, C> is matched with an SR-TE policy of same <N, C>.<br>**2.** If a policy does not exist, then an SR-TE policy with NULL end-point with the same address-family as N and color C is chosen.<br>**3.** If a policy with NULL end-point with same address-family as N does not exist, then an SR-TE policy with any NULL end-point and color C is chosen.<br>**4.** If no match is found, then IGP path for the next-hop N is chosen. |

### Configuration Example

```
Router(config)# extcommunity-set opaque overlay-color
Router(config-ext)# 1 co-flag 01
Router(config-ext)# end-set
Router(config)#
Router(config)# route-policy color
Router(config-rpl)# if destination in (5.5.5.1/32) then
Router(config-rpl-if)# set extcommunity color overlay-color
Router(config-rpl-if)# endif
Router(config-rpl)# pass
Router(config-rpl)# end-policy
Router(config)#
```

# Address-Family Agnostic Automated Steering

Address-family agnostic steering uses an SR-TE policy to steer both labeled and unlabeled IPv4 and IPv6 traffic. This feature requires support of IPv6 encapsulation (IPv6 caps) over IPV4 endpoint policy.

IPv6 caps for IPv4 NULL end-point is enabled automatically when the policy is created in Segment Routing Path Computation Element (SR-PCE). The binding SID (BSID) state notification for each policy contains an "ipv6_caps" flag that notifies SR-PCE clients (PCC) of the status of IPv6 caps (enabled or disabled).

An SR-TE policy with a given color and IPv4 NULL end-point could have more than one candidate path. If any of the candidate paths has IPv6 caps enabled, then all of the remaining candidate paths need IPv6 caps enabled. If IPv6 caps is not enabled on all candidate paths of same color and end-point, traffic drops can occur.

You can disable IPv6 caps for a particular color and IPv4 NULL end-point using the **ipv6 disable** command on the local policy. This command disables IPv6 caps on all candidate paths that share the same color and IPv4 NULL end-point.

### Disable IPv6 Encapsulation

```
Router# configure
Router(config)# segment-routing
Router(config-sr)# traffic-eng
Router(config-sr-te)# policy P1
Router(config-sr-te-policy)# color 1 end-point ipv4 0.0.0.0
Router(config-sr-te-policy)# ipv6 disable
```

# Per-Flow Automated Steering

*Table 40: Feature History Table*

| Feature Name | Release Information | Feature Description |
|---|---|---|
| Per-Flow Automated Steering | Release 7.3.1 | This feature lets you auto-steer traffic on an SR policy based on the attributes of incoming packets, called Per-flow policy (PFP).<br><br>Packets are classified and marked using forward classes (FCs). A Per-Flow Policy (PFP) steers the marked packets based on the mapping between an FC and its path. In effect, the feature auto-steers traffic with SR PFP based on its markings, and then switches the traffic to an appropriate path based on the packet FCs. |
| Per-Flow Automated Steering: L2 EVPN BGP Services | Release 7.4.1 | This feature introduces support for the following:<br>• BGP EVPN (single-home/multi-homed) over a per-flow policy (PFP)<br>• Packet classification using Layer 2 class of service (CoS) values |

The steering of traffic through a Segment Routing (SR) policy is based on the candidate paths of that policy. For a given policy, a candidate path specifies the path to be used to steer traffic to the policy's destination. The policy determines which candidate path to use based on the candidate path's preference and state. The candidate path that is valid and has the highest preference is used to steer all traffic using the given policy. This type of policy is called a Per-Destination Policy (PDP).

Per-Flow Automated Traffic Steering using SR-TE Policies introduces a way to steer traffic on an SR policy based on the attributes of the incoming packets, called a Per-Flow Policy (PFP).

A PFP provides up to 8 "ways" or options to the endpoint. With a PFP, packets are classified by a classification policy and marked using internal tags called forward classes (FCs). The FC setting of the packet selects the "way". For example, this "way" can be a traffic-engineered SR path, using a low-delay path to the endpoint. The FC is represented as a numeral with a value of 0 to 7.

A PFP defines an array of FC-to-PDP mappings. A PFP can then be used to steer traffic into a given PDP based on the FC assigned to a packet.

As with PDPs, PFPs are identified by a {headend, color, endpoint} tuple. The color associated with a given FC corresponds to a valid PDP policy of that color and same endpoint as the parent PFP. So PFP policies contain mappings of different FCs to valid PDP policies of different colors. Every PFP has an FC designated

as its default FC. The default FC is associated to packets with a FC undefined under the PFP or for packets with a FC with no valid PDP policy.

The following example shows a per-flow policy from Node1 to Node4:

***Figure 21: PFP Example***

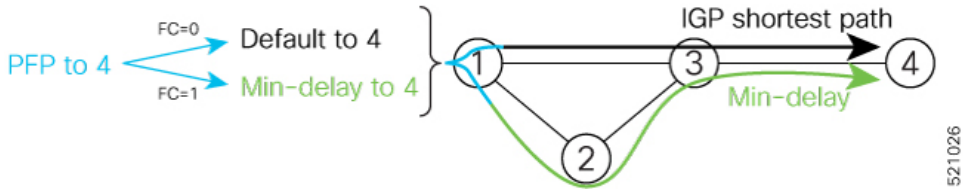


- FC=0 -> shortest path to Node4
  - IGP shortest path = 16004
- FC=1 -> Min-delay path to Node4
  - SID list = {16002,16004}

The same on-demand instantiation behaviors of PDPs apply to PFPs. For example, an edge node automatically (on demand) instantiates Per-Flow SR Policy paths to an endpoint by service route signaling. Automated Steering steers the service route in the matching SR Policy.

***Figure 22: PFP with ODN Example***

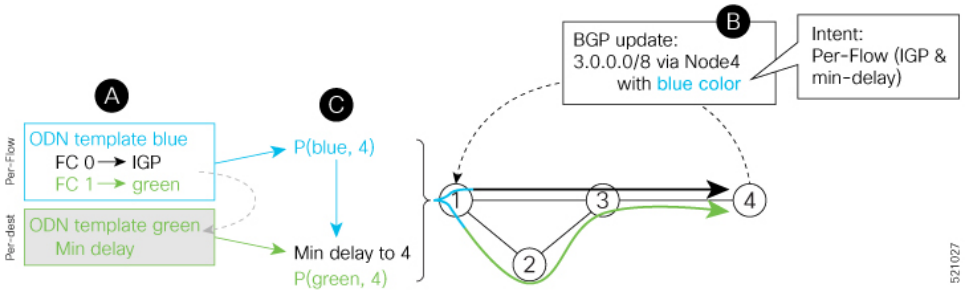


Like PDPs, PFPs have a binding SID (BSID). Existing SR-TE automated steering (AS) mechanisms for labeled traffic (via BSID) and unlabeled traffic (via BGP) onto a PFP is similar to that of a PDP. For example, a packet having the BSID of a PFP as the top label is steered onto that PFP. The classification policy on the ingress interface marks the packet with an FC based on the configured class-map. The packet is then steered to the PDP that corresponds to that FC.

### Usage Guidelines and Limitations

The following guidelines and limitations apply to the platform when acting as a head-end of a PFP policy:

- BGP IPv4 unicast over PFP (steered via ODN/AS) is supported
- BGP IPv6 unicast (with IPv4 next-hop [6PE]) over PFP (steered via ODN/AS) is supported
- BGP IPv6 unicast (with IPv6 next-hop) over PFP (steered via ODN/AS) is supported
- BGP VPNv4 over PFP (steered via ODN/AS) is supported
- BGP VPNv6 (6VPE) over PFP (steered via ODN/AS) is supported

- BGP EVPN (single-home/multi-homed) over PFP (steered via ODN/AS) is supported
- Pseudowire and VPLS over PFP (steered with preferred-path) are supported
- BGP multipath is supported
- BGP PIC is not supported
- Labeled traffic (Binding SID as top-most label in the stack) steered over PFP is supported
- When not explicitly configured, FC 0 is the default FC.
- A PFP is considered valid as long as its default FC has a valid PDP.
- An ingress PBR policy applied to an input interface is used to classify flows and set corresponding forward class (FC) values.
- The following counters are supported:
  - PFP's BSID counter (packet, bytes)
  - Per-FC counters (packet, byte)
    - Collected from the PDP's segment-list-per-path egress counters
    - If an SR policy is used for more than one purpose (as a regular policy as well as a PDP under one or more PFPs), then the collected counters will represent the aggregate of all contributions. To preserve independent counters, it is recommended that an SR policy be used only for one purpose.
- Inbound packet classification, based on the following fields, is supported:
  - IP precedence
  - IP DSCP
  - L3 ACL-based (L3 source/destination IP; L4 source/destination port)
  - MPLS EXP
  - Layer 2 CoS
  - MAC ACL
- A color associated with a PFP SR policy cannot be used by a non-PFP SR policy. For example, if a per-flow ODN template for color 100 is configured, then the system will reject the configuration of any non-PFP SR policy using the same color. You must assign different color value ranges for PFP and non-PFP SR policies.

### Configuring ODN Template for PFP Policies: Example

The following example depicts an ODN template for PFP policies that includes three FCs.

The example also includes the corresponding ODN templates for PDPs as follows:

- FC0 (default FC) mapped to color 10 = Min IGP path
- FC1 mapped to color 20 = Flex Algo 128 path

- FC2 mapped to color 30 = Flex Algo 129 path

```
segment-routing
 traffic-eng
  on-demand color 10
   dynamic
    metric
     type igp
    !
   !
  !
  on-demand color 20
   constraints
    segments
     sid-algorithm 128
    !
   !
  !
  on-demand color 30
   constraints
    segments
     sid-algorithm 129
    !
   !
  !
  on-demand color 1000
   per-flow
    forward-class 0 color 10
    forward-class 1 color 20
    forward-class 2 color 30
```

### Manually Configuring a PFP and PDPs: Example

The following example depicts a manually defined PFP that includes three FCs and corresponding manually defined PDPs.

The example also includes the corresponding PDPs as follows:

- FC0 (default FC) mapped to color 10 = Min IGP path
- FC1 mapped to color 20 = Min TE path
- FC2 mapped to color 30 = Min delay path

```
segment-routing
 traffic-eng
  policy MyPerFlow
   color 1000 end-point ipv4 10.1.1.4
   candidate-paths
    preference 100
     per-flow
      forward-class 0 color 10
      forward-class 1 color 20
      forward-class 2 color 30
  !
  policy MyLowIGP
   color 10 end-point ipv4 10.1.1.4
   candidate-paths
    preference 100
     dynamic
      metric type igp
```

```
  !
  policy MyLowTE
   color 20 end-point ipv4 10.1.1.4
   candidate-paths
    preference 100
     dynamic
      metric type te
  !
  policy MyLowDelay
   color 30 end-point ipv4 10.1.1.4
   candidate-paths
    preference 100
     dynamic
      metric type delay
```

### Configuring Ingress Classification: Example

An PBR policy is used to classify and mark traffic to a corresponding fowarding class.

The following shows an example of such ingress classification policy:

```
class-map type traffic match-any MinDelay
 match dscp 46
 end-class-map
!
class-map type traffic match-any PremiumHosts
 match access-group ipv4 PrioHosts
 end-class-map
 !
!
policy-map type pbr MyPerFlowClassificationPolicy
 class type traffic MinDelay
  set forward-class 2
 !
 class type traffic PremiumHosts
  set forward-class 1
 !
 class type traffic class-default
 !
 end-policy-map
!
interface GigabitEthernet0/0/0/0
 description PE_Ingress_Interface
 service-policy type pbr input MyPerFlowClassificationPolicy
!
```

### Determining Per-Flow Policy State

A PFP is brought down for the following reasons:

- The PDP associated with the default FC is in a down state.
- All FCs are associated with PDPs in a down state.
- The FC assigned as the default FC is missing in the forward class mapping.

  Scenario 1—FC 0 (default FC) is not configured in the FC mappings below:

  ```
  policy foo
    color 1 end-point ipv4 10.1.1.1
    per-flow
     forward-class 1 color 10
  ```

```
   forward-class 2 color 20
```

Scenario 2—FC 1 is configured as the default FC, however it is not present in the FC mappings:

```
policy foo
  color 1 end-point ipv4 10.1.1.1
  per-flow
   forward-class 0 color 10
   forward-class 2 color 20
   forward-class default 1
```

# Using Binding Segments

The binding segment is a local segment identifying an SR-TE policy. Each SR-TE policy is associated with a binding segment ID (BSID). The BSID is a local label that is automatically allocated for each SR-TE policy when the SR-TE policy is instantiated.

**Note** In Cisco IOS XR 6.3.2 and later releases, you can specify an explicit BSID for an SR-TE policy. See the following **Explicit Binding SID** section.

BSID can be used to steer traffic into the SR-TE policy and across domain borders, creating seamless end-to-end inter-domain SR-TE policies. Each domain controls its local SR-TE policies; local SR-TE policies can be validated and rerouted if needed, independent from the remote domain's head-end. Using binding segments isolates the head-end from topology changes in the remote domain.

Packets received with a BSID as top label are steered into the SR-TE policy associated with the BSID. When the BSID label is popped, the SR-TE policy's SID list is pushed.

BSID can be used in the following cases:

- Multi-Domain (inter-domain, inter-autonomous system)—BSIDs can be used to steer traffic across domain borders, creating seamless end-to-end inter-domain SR-TE policies.
- Large-Scale within a single domain—The head-end can use hierarchical SR-TE policies by nesting the end-to-end (edge-to-edge) SR-TE policy within another layer of SR-TE policies (aggregation-to-aggregation). The SR-TE policies are nested within another layer of policies using the BSIDs, resulting in seamless end-to-end SR-TE policies.
- Label stack compression—If the label-stack size required for an SR-TE policy exceeds the platform capability, the SR-TE policy can be seamlessly stitched to, or nested within, other SR-TE policies using a binding segment.
- BGP SR-TE Dynamic—The head-end steers the packet into a BGP-based FIB entry whose next hop is a binding-SID.

### Explicit Binding SID

Use the **binding-sid mpls** *label* command in SR-TE policy configuration mode to specify the explicit BSID. Explicit BSIDs are allocated from the segment routing local block (SRLB) or the dynamic range of labels. A best-effort is made to request and obtain the BSID for the SR-TE policy. If requested BSID is not available (if it does not fall within the available SRLB or is already used by another application or SR-TE policy), the policy stays down.

Use the **binding-sid explicit** {**fallback-dynamic** | **enforce-srlb**} command to specify how the BSID allocation behaves if the BSID value is not available.

- Fallback to dynamic allocation – If the BSID is not available, the BSID is allocated dynamically and the policy comes up:

```
Router# configure
Router(config)# segment-routing
Router(config-sr)# traffic-eng
Router(config-sr-te)# binding-sid explicit fallback-dynamic
```

- Strict SRLB enforcement – If the BSID is not within the SRLB, the policy stays down:

```
Router# configure
Router(config)# segment-routing
Router(config-sr)# traffic-eng
Router(config-sr-te)# binding-sid explicit enforce-srlb
```

This example shows how to configure an SR policy to use an explicit BSID of 1000. If the BSID is not available, the BSID is allocated dynamically and the policy comes up.

```
segment-routing
 traffic-eng
  binding-sid explicit fallback-dynamic
  policy goo
   binding-sid mpls 1000
  !
 !
!
```

## Stitching SR-TE Polices Using Binding SID: Example

In this example, three SR-TE policies are stitched together to form a seamless end-to-end path from node 1 to node 10. The path is a chain of SR-TE policies stitched together using the binding-SIDs of intermediate policies, providing a seamless end-to-end path.

***Figure 23: Stitching SR-TE Polices Using Binding SID***

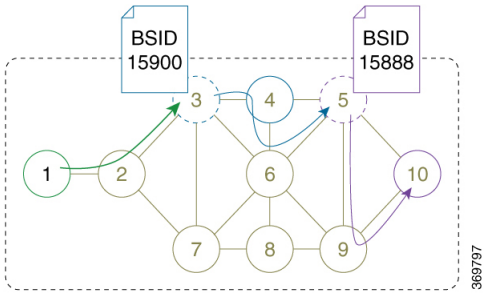


***Table 41: Router IP Address***

| Router | Prefix Address | Prefix SID/Adj-SID |
|---|---|---|
| 3 | Loopback0 - 10.1.1.3 | Prefix SID - 16003 |

| Router | Prefix Address | Prefix SID/Adj-SID |
|---|---|---|
| 4 | Loopback0 - 10.1.1.4<br>Link node 4 to node 6 - 10.4.6.4 | Prefix SID - 16004<br>Adjacency SID - dynamic |
| 5 | Loopback0 - 10.1.1.5 | Prefix SID - 16005 |
| 6 | Loopback0 - 10.1.1.6<br>Link node 4 to node 6 - 10.4.6.6 | Prefix SID - 16006<br>Adjacency SID - dynamic |
| 9 | Loopback0 - 10.1.1.9 | Prefix SID - 16009 |
| 10 | Loopback0 - 10.1.1.10 | Prefix SID - 16010 |

**Step 1** On node 5, do the following:

a) Define an SR-TE policy with an explicit path configured using the loopback interface IP addresses of node 9 and node 10.

b) Define an explicit binding-SID (**mpls label 15888**) allocated from SRLB for the SR-TE policy.

**Example:**

**Node 5**

```
segment-routing
 traffic-eng
  segment-list PATH-9_10
   index 10 address ipv4 10.1.1.9
   index 20 address ipv4 10.1.1.10
  !
  policy foo
   binding-sid mpls 15888
   color 777 end-point ipv4 10.1.1.10
   candidate-paths
    preference 100
     explicit segment-list PATH5-9_10
     !
    !
   !
  !
 !
!

RP/0/RSP0/CPU0:Node-5# show segment-routing traffic-eng policy color 777

SR-TE policy database
---------------------

Color: 777, End-point: 10.1.1.10
  Name: srte_c_777_ep_10.1.1.10
  Status:
    Admin: up  Operational: up for 00:00:52 (since Aug 19 07:40:12.662)
  Candidate-paths:
    Preference: 100 (configuration) (active)
      Name: foo
      Requested BSID: 15888
      PCC info:
        Symbolic name: cfg_foo_discr_100
        PLSP-ID: 70
```

```
      Explicit: segment-list PATH-9_10 (valid)
        Weight: 1, Metric Type: TE
          16009 [Prefix-SID, 10.1.1.9]
          16010 [Prefix-SID, 10.1.1.10]
  Attributes:
    Binding SID: 15888 (SRLB)
    Forward Class: 0
    Steering BGP disabled: no
    IPv6 caps enable: yes
```

**Step 2** On node 3, do the following:

a) Define an SR-TE policy with an explicit path configured using the following:

- Loopback interface IP address of node 4
- Interface IP address of link between node 4 and node 6
- Loopback interface IP address of node 5
- Binding-SID of the SR-TE policy defined in Step 1 (**mpls label 15888**)

**Note** This last segment allows the stitching of these policies.

b) Define an explicit binding-SID (**mpls label 15900**) allocated from SRLB for the SR-TE policy.

**Example:**

**Node 3**

```
segment-routing
 traffic-eng
  segment-list PATH-4_4-6_5_BSID
   index 10 address ipv4 10.1.1.4
   index 20 address ipv4 10.4.6.6
   index 30 address ipv4 10.1.1.5
   index 40 mpls label 15888
  !
  policy baa
   binding-sid mpls 15900
   color 777 end-point ipv4 10.1.1.5
   candidate-paths
    preference 100
     explicit segment-list PATH-4_4-6_5_BSID
     !
    !
   !
  !
 !
!

RP/0/RSP0/CPU0:Node-3# show segment-routing traffic-eng policy color 777

SR-TE policy database
---------------------

Color: 777, End-point: 10.1.1.5
  Name: srte_c_777_ep_10.1.1.5
  Status:
    Admin: up  Operational: up for 00:00:32 (since Aug 19 07:40:32.662)
  Candidate-paths:
    Preference: 100 (configuration) (active)
      Name: baa
      Requested BSID: 15900
```

```
        PCC info:
          Symbolic name: cfg_baa_discr_100
          PLSP-ID: 70
        Explicit: segment-list PATH-4_4-6_5_BSID (valid)
          Weight: 1, Metric Type: TE
            16004 [Prefix-SID, 10.1.1.4]
            80005 [Adjacency-SID, 10.4.6.4 - 10.4.6.6]
            16005 [Prefix-SID, 10.1.1.5]
            15888
    Attributes:
      Binding SID: 15900 (SRLB)
      Forward Class: 0
      Steering BGP disabled: no
      IPv6 caps enable: yes
```

**Step 3** On node 1, define an SR-TE policy with an explicit path configured using the loopback interface IP address of node 3 and the binding-SID of the SR-TE policy defined in step 2 (**mpls label 15900**). This last segment allows the stitching of these policies.

**Example:**

**Node 1**

```
segment-routing
 traffic-eng
  segment-list PATH-3_BSID
   index 10 address ipv4 10.1.1.3
   index 20 mpls label 15900
  !
  policy bar
   color 777 end-point ipv4 10.1.1.3
   candidate-paths
    preference 100
     explicit segment-list PATH-3_BSID
     !
    !
   !
  !
 !
!

RP/0/RSP0/CPU0:Node-1# show segment-routing traffic-eng policy color 777

SR-TE policy database
---------------------

Color: 777, End-point: 10.1.1.3
  Name: srte_c_777_ep_10.1.1.3
  Status:
    Admin: up  Operational: up for 00:00:12 (since Aug 19 07:40:52.662)
  Candidate-paths:
    Preference: 100 (configuration) (active)
      Name: bar
      Requested BSID: dynamic
      PCC info:
        Symbolic name: cfg_bar_discr_100
        PLSP-ID: 70
      Explicit: segment-list PATH-3_BSID (valid)
        Weight: 1, Metric Type: TE
          16003 [Prefix-SID, 10.1.1.3]
          15900
  Attributes:
    Binding SID: 80021
```

```
Forward Class: 0
Steering BGP disabled: no
IPv6 caps enable: yes
```

# L2VPN Preferred Path

EVPN VPWS Preferred Path over SR-TE Policy feature allows you to set the preferred path between the two end-points for EVPN VPWS pseudowire (PW) using SR-TE policy.

L2VPN VPLS or VPWS Preferred Path over SR-TE Policy feature allows you to set the preferred path between the two end-points for L2VPN Virtual Private LAN Service (VPLS) or Virtual Private Wire Service (VPWS) using SR-TE policy.

Refer to the EVPN VPWS Preferred Path over SR-TE Policy and L2VPN VPLS or VPWS Preferred Path over SR-TE Policy sections in the "L2VPN Services over Segment Routing for Traffic Engineering Policy" chapter of the *L2VPN and Ethernet Services Configuration Guide*.

# Static Route over Segment Routing Policy

This feature allows you to specify a Segment Routing (SR) policy as an interface type when configuring static routes for MPLS data planes.

For information on configuring static routes, see the "Implementing Static Routes" chapter in the *Routing Configuration Guide for Cisco ASR 9000 Series Routers*.

### Configuration Example

The following example depicts a configuration of a static route for an IPv4 destination over an SR policy.

```
Router(config)# router static
Router(config-static)# address-family ipv4 unicast
Router(config-static-afi)# 10.1.100.100/32 sr-policy sample-policy
```

### Running Configuration

```
Router# show run segment-routing traffic-eng

segment-routing
 traffic-eng
  segment-list sample-SL
   index 10 mpls adjacency 10.1.1.102
   index 20 mpls adjacency 10.1.1.103
  !
  policy sample-policy
   color 777 end-point ipv4 10.1.1.103
   candidate-paths
    preference 100
     explicit segment-list sample-SL

Router# show run segment-routing traffic-eng

router static
 address-family ipv4 unicast
  10.1.1.4/32 sr-policy srte_c_200_ep_10.1.1.4
 !
```

```
!
```

## Verification

```
Router# show segment-routing traffic-eng policy candidate-path name sample-policy

SR-TE policy database
---------------------

Color: 777, End-point: 10.1.1.103
  Name: srte_c_777_ep_10.1.1.103
  Status:
    Admin: up  Operational: up for 00:06:35 (since Jan 17 14:34:35.120)
  Candidate-paths:
    Preference: 100 (configuration) (active)
      Name: sample-policy
      Requested BSID: dynamic
      PCC info:
        Symbolic name: cfg_sample-policy_discr_100
        PLSP-ID: 5
      Constraints:
        Protection Type: protected-preferred
        Maximum SID Depth: 9
      Explicit: segment-list sample-SL (valid)
        Weight: 1, Metric Type: TE
          SID[0]: 100102 [Prefix-SID, 10.1.1.102]
          SID[1]: 100103 [Prefix-SID, 10.1.1.103]
  Attributes:
    Binding SID: 24006
    Forward Class: Not Configured
    Steering labeled-services disabled: no
    Steering BGP disabled: no
    IPv6 caps enable: yes
    Invalidation drop enabled: no
    Max Install Standby Candidate Paths: 0


Router# show static sr-policy sample-policy

SR-Policy-Name           State   Binding-label Interface                 ifhandle   VRF
       Paths
sample-policy            Up      24006         srte_c_777_ep_10.1.1.103  0x2000803c default
      10.1.100.100/32
Reference count=1, Internal flags=0x0
Last Policy notification was Up at Jan 17 13:39:46.478


Router# show route 10.1.100.100/32

Routing entry for 10.1.100.100/32
  Known via "static", distance 1, metric 0
  Installed Jan 17 14:35:40.969 for 00:06:38
  Routing Descriptor Blocks
    directly connected, via srte_c_777_ep_10.1.1.103
      Route metric is 0
  No advertising protos.


Router# show route 10.1.100.100/32 detail

Routing entry for 10.1.100.100/32
  Known via "static", distance 1, metric 0
  Installed Jan 17 14:35:40.969 for 00:06:44
  Routing Descriptor Blocks
```

```
    directly connected, via srte_c_777_ep_10.1.1.103
      Route metric is 0
      Label: None
      Tunnel ID: None
      Binding Label: 0x5dc6 (24006)
      Extended communities count: 0
      NHID: 0x0 (Ref: 0)
  Route version is 0x1 (1)
  No local label
  IP Precedence: Not Set
  QoS Group ID: Not Set
  Flow-tag: Not Set
  Fwd-class: Not Set
  Route Priority: RIB_PRIORITY_STATIC (9) SVD Type RIB_SVD_TYPE_LOCAL
  Download Priority 3, Download Version 3169
  No advertising protos.
```

```
Router# show cef 10.1.100.100/32

10.1.100.100/32, version 3169, internal 0x1000001 0x30 (ptr 0x8b1b95d8) [1], 0x0 (0x0), 0x0
 (0x0)
 Updated Jan 17 14:35:40.971
 Prefix Len 32, traffic index 0, precedence n/a, priority 3
  gateway array (0x8a92f228) reference count 1, flags 0x2010, source rib (7), 0 backups
                [1 type 3 flags 0x48441 (0x8a9d1b68) ext 0x0 (0x0)]
  LW-LDI[type=0, refc=0, ptr=0x0, sh-ldi=0x0]
  gateway array update type-time 1 Jan 17 14:35:40.971
 LDI Update time Jan 17 14:35:40.972
   via local-label 24006, 3 dependencies, recursive [flags 0x0]
    path-idx 0 NHID 0x0 [0x8ac59f30 0x0]
    recursion-via-label
    next hop via 24006/1/21

    Load distribution: 0 (refcount 1)

    Hash  OK  Interface                 Address
    0     Y   recursive                 24006/1
```

# Autoroute Include

You can configure SR-TE policies with Autoroute Include to steer specific IGP (IS-IS, OSPF) prefixes, or all prefixes, over non-shortest paths and to divert the traffic for those prefixes on to the SR-TE policy.

The **autoroute include all** option applies Autoroute Announce functionality for all destinations or prefixes.

The **autoroute include ipv4** *address* option applies Autoroute Destination functionality for the specified destinations or prefixes. This option is supported for IS-IS only; it is not supported for OSPF.

The Autoroute SR-TE policy adds the prefixes into the IGP, which determines if the prefixes on the endpoint or downstream of the endpoint are eligible to use the SR-TE policy. If a prefix is eligible, then the IGP checks if the prefix is listed in the Autoroute Include configuration. If the prefix is included, then the IGP downloads the prefix route with the SR-TE policy as the outgoing path.

### Usage Guidelines and Limitations

- Autoroute Include supports three metric types:
  - Default (no metric): The path over the SR-TE policy inherits the shortest path metric.

- Absolute (constant) metric: The shortest path metric to the policy endpoint is replaced with the configured absolute metric. The metric to any prefix that is Autoroute Included is modified to the absolute metric. Use the **autoroute metric constant** *constant-metric* command, where *constant-metric* is from 1 to 2147483647.
- Relative metric: The shortest path metric to the policy endpoint is modified with the relative value configured (plus or minus). Use the **autoroute metric relative** *relative-metric* command, where *relative-metric* is from -10 to +10.

**Note** To prevent load-balancing over IGP paths, you can specify a metric that is lower than the value that IGP takes into account for autorouted destinations (for example, **autoroute metric relative -1**).

- LDP to SR-TE interworking is not supported.

### Configuration Examples

The following example shows how to configure autoroute include for all prefixes:

```
Router# configure
Router(config)# segment-routing
Router(config-sr)# traffic-eng
Router(config-sr-te)#policy P1
Router(config-sr-te-policy)# color 20 end-point ipv4 10.1.1.2
Router(config-sr-te-policy)# autoroute include all
Router(config-sr-te-policy)# candidate-paths
Router(config-sr-te-policy-path)# preference 100
Router(config-sr-te-pp-index)# explicit segment-list Plist-1
```

The following example shows how to configure autoroute include for the specified IPv4 prefixes:

**Note** This option is supported for IS-IS only; it is not supported for OSPF.

```
Router# configure
Router(config)# segment-routing
Router(config-sr)# traffic-eng
Router(config-sr-te)#policy P1
Router(config-sr-te-policy)# color 20 end-point ipv4 10.1.1.2
Router(config-sr-te-policy)# autoroute include ipv4 10.1.1.21/32
Router(config-sr-te-policy)# autoroute include ipv4 10.1.1.23/32
Router(config-sr-te-policy)# autoroute metric constant 1
Router(config-sr-te-policy)# candidate-paths
Router(config-sr-te-policy-path)# preference 100
Router(config-sr-te-pp-index)# explicit segment-list Plist-1
```

# Policy-Based Tunnel Selection for SR-TE Policy

Policy-Based Tunnel Selection (PBTS) is a mechanism that lets you direct traffic into specific SR-TE policies based on different classification criteria. PBTS benefits Internet service providers (ISPs) that carry voice and data traffic through their networks, who want to route this traffic to provide optimized voice service.

PBTS works by selecting SR-TE policies based on the classification criteria of the incoming packets, which are based on the IP precedence, experimental (EXP), differentiated services code point (DSCP), or type of service (ToS) field in the packet. Default-class configured for paths is always zero (0). If there is no TE for a given forward-class, then the default-class (0) will be tried. If there is no default-class, then the packet is dropped. PBTS supports up to seven (exp 1 - 7) EXP values associated with a single SR-TE policy.

For more information about PBTS, refer to the "Policy-Based Tunnel Selection" section in the *MPLS Configuration Guide for Cisco ASR 9000 Series RoutersMPLS Configuration Guide*.

### Configure Policy-Based Tunnel Selection for SR-TE Policies

The following section lists the steps to configure PBTS for an SR-TE policy.

**Note** Steps 1 through 4 are detailed in the "Implementing MPLS Traffic Engineering" chapter of the *MPLS Configuration Guide for Cisco ASR 9000 Series RoutersMPLS Configuration Guide*.

1. Define a class-map based on a classification criteria.
2. Define a policy-map by creating rules for the classified traffic.
3. Associate a forward-class to each type of ingress traffic.
4. Enable PBTS on the ingress interface, by applying this service-policy.
5. Create one or more egress SR-TE policies (to carry packets based on priority) to the destination and associate the egress SR-TE policy to a forward-class.

### Configuration Example

```
Router(config)# segment-routing traffic-eng
Router(config-sr-te)# policy POLICY-PBTS
Router(config-sr-te-policy)# color 1001 end-point ipv4 10.1.1.20
Router(config-sr-te-policy)# autoroute
Router(config-sr-te-policy-autoroute)# include all
Router(config-sr-te-policy-autoroute)# forward-class 1
Router(config-sr-te-policy-autoroute)# exit
Router(config-sr-te-policy)# candidate-paths
Router(config-sr-te-policy-path)# preference 1
Router(config-sr-te-policy-path-pref)# explicit segment-list SIDLIST1
Router(config-sr-te-policy-path-pref)# exit
Router(config-sr-te-pp-info)# exit
Router(config-sr-te-policy-path-pref)# exit
Router(config-sr-te-policy-path)# preference 2
Router(config-sr-te-policy-path-pref)# dynamic
Router(config-sr-te-pp-info)# metric
Router(config-sr-te-path-metric)# type te
Router(config-sr-te-path-metric)# commit
```

### Running Configuration

```
segment-routing
 traffic-eng
  policy POLICY-PBTS
   color 1001 end-point ipv4 10.1.1.20
   autoroute
    include all
    forward-class 1
   !
   candidate-paths
    preference 1
     explicit segment-list SIDLIST1
     !
    !
    preference 2
     dynamic
      metric
       type te
```

# Miscellaneous

## SR Policy Liveness Monitoring

SR Policy liveness monitoring allows you to verify end-to-end traffic forwarding over an SR Policy candidate path by periodically sending performance monitoring (PM) packets. The head-end router sends PM packets to the SR policy's endpoint router, which sends them back to the head-end without any control-plane dependency on the endpoint router.

For more information about this feature, see SR Policy Liveness Monitoring, on page 505.

# Programming Non-Active Candidate Paths of an SR Policy

*Table 42: Feature History Table*

| Feature Name | Release Information | Feature Description |
|---|---|---|
| Programming Non-Active Candidate Paths of an SR Policy | Release 7.6.1 | By programming non-active candidate paths (CPs) in the forwarding plane, you ensure that if the existing active CP is unavailable, the traffic switches quickly to the new CP, thus minimizing loss of traffic flow.<br><br>In earlier releases, instantiating a non-active CP to the forwarding plane after the unavailability of the active CP could take a few seconds, resulting in potential loss of traffic flow.<br><br>This feature introduces the following command:<br><br>• max-install-standby-cpaths |

An SR Policy is associated with one or more candidate paths (CP). A CP is selected as the active CP when it is valid and it has the highest preference value among all the valid CPs of the SR Policy. By default, only the active CP is programmed in the forwarding plane.

This feature allows the programming of multiple CPs of an SR policy in the forwarding plane. This minimizes traffic loss when a new CP is selected as active.

### Usage Guidelines and Limitations

Observe the following usage guidelines and limitations:

- Up to three non-active CPs can be programmed in the forwarding plane.
- Manually configured CPs are supported. This includes CPs with explicit paths or dynamic (head-end computed or PCE-delegated) paths.
- On-Demand instantiated CPs (ODN) are supported.
- BGP-initiated CPs are supported.
- PCE-initiated CPs via PCEP are not supported. This applies to polices created via CLI or via north-bound HTTP-based API.
- Programming of non-active CPs is not supported with SRv6-TE policies, Per-Flow Policies (PFP), or point-to-multipoint SR policies (Tree-SID)
- PCEP reporting of additional CPs is supported, but the PCEP reporting does not distinguish between active and non-active CPs.

- Programming of non-active CPs can be enabled for all SR policies (global), for a specific policy (local), or ODN template.

  If enabled globally and also locally or on ODN template, the local or ODN configuration takes precedence over the global configuration.

  - Programming of non-active CPs under global SR-TE and configuring policy path protection of an SR policy is supported. In this case, policy path protection takes precedence.
  - Programming of non-active CPs for a specific SR policy and configuring policy path protection of an SR policy is not supported.

- The number of policies supported could be impacted by the number of non-active CPs per policy. Programming non-active CPs in the forwarding plane consumes hardware resources (such as local label and ECMP FEC) when more candidate paths are pre-programmed in forwarding than are actually carrying traffic.
- The active CP will be in programmed state. The remaining CPs will be in standby programmed state.
- We recommend that you create separate PM sessions for active and standby candidate paths to monitor the health of the paths end-to-end.

  The recommended PM timers should be different for active and standby PM profiles. The PM timers should be less aggressive for the standby PM profile compared to the active PM profile. See Configure Performance Measurement, on page 499 for information about configuring PM sessions.

**Note** PM sessions for BGP-TE policies are not supported. PM profiles can be configured only under configured policies at the head-end.

- The protected paths for each CP is programmed in the respective LSPs. The protected paths of active CPs are programmed in the active LSP, and the protected paths of standby CPs are programmed in the standby LSP.
- If a candidate path with higher preference becomes available, the traffic will switch to it in Make-Before-Break (MBB) behavior.

### Configuration

Programming of non-active CPs can be enabled for all SR policies (global), for a specific policy (local), or ODN template. If enabled globally, the local or ODN configuration takes precedence over the global configuration.

#### Global SR-TE

Use the **max-install-standby-cpaths** *value* command to configure standby candidate paths for all SR policies, for a specific policy, or for an ODN template. The range for *value* is from 1 to 3. Use **no max-install-standby-cpaths** command to return to the default behavior.

The following example shows how to configure standby candidate paths globally:

```
Router(config)# segment-routing traffic-eng
Router(config-sr-te)# max-install-standby-cpaths 2
Router(config-sr-te)#
```

### Running Config

```
segment-routing
 traffic-eng
  max-install-standby-cpaths 2
```

### Local SR Policy

Use the **max-install-standby-cpaths** *value* command to configure standby candidate paths for a specific policy. The range for *value* is from 0 (disable) to 3.

If programming of non-active CPs is enabled for all SR policies (global), you can disable programming of non-active CPs for a specific policy using the **max-install-standby-cpaths 0** command.

The following example shows how to configure standby candidate paths for a specific SR policy:

```
Router(config)# segment-routing traffic-eng
Router(config-sr-te)# policy MyBackupPolicy
Router(config-sr-te-policy)# max-install-standby-cpaths 2
Router(config-sr-te-policy)#
```

### Running Config

```
segment-routing
 traffic-eng
  policy MyBackupPolicy
   max-install-standby-cpaths 2
```

### SR ODN

When you create an ODN template, two CPs are created by default (PCE-delegated and head-end computed) with preference 100 and preference 200. You can use the **max-install-standby-cpaths 1** command to program the non-active CP in forwarding. If programming of non-active CPs is enabled for all SR policies (global), you can disable programming of non-active CPs on ODN template using the **max-install-standby-cpaths 0** command.

The following example shows how to configure standby candidate paths for an SR ODN template:

```
Router(config)# segment-routing traffic-eng
Router(config-sr-te)# on-demand color 10
Router(config-sr-te-color)# max-install-standby-cpaths 1
Router(config-sr-te-color)#
```

Running Config

```
segment-routing
 traffic-eng
   on-demand color 10
    max-install-standby-cpaths 1
```

The following example shows how to enable three standby CPs globally and disable standby CPs on local SR policy and ODN template:

```
Router(config)# segment-routing traffic-eng
Router(config-sr-te)# max-install-standby-cpaths 3
Router(config-sr-te)# policy MyBackupPolicy
Router(config-sr-te-policy)# max-install-standby-cpaths 0
```

```
Router(config-sr-te-policy)# exit
Router(config-sr-te)# on-demand color 10
Router(config-sr-te-color)# max-install-standby-cpaths 0
Router(config-sr-te-color)#
```

### Verification

The following output shows the status of active and backup CPs:

```
Router# show segment-routing traffic-eng policy

SR-TE policy database
---------------------

Color: 50, End-point: 1.1.1.4
  Name: srte_c_50_ep_1.1.1.4
  Status:
    Admin: up  Operational: up for 08:17:32 (since Sep  9 13:16:02.818)
  Candidate-paths:
    Preference: 100 (configuration) (active)
      Name: NCP_STATIC
      Requested BSID: 5000
      PCC info:
        Symbolic name: cfg_NCP_STATIC_discr_100
        PLSP-ID: 2
        Protection Type: protected-preferred
        Maximum SID Depth: 10
      Explicit: segment-list WORKING (valid)
        Reverse: segment-list REVERSE_WORKING
        Weight: 1, Metric Type: TE
          24010
          24012
    Preference: 80 (configuration) (standby)
      Name: NCP_STATIC
      Requested BSID: 5000
      PCC info:
        Symbolic name: cfg_NCP_STATIC_discr_80
        PLSP-ID: 3
        Protection Type: protected-preferred
        Maximum SID Depth: 10
      Explicit: segment-list STANDBY1 (valid)
        Reverse: segment-list REVERSE_STANDBY1
        Weight: 1, Metric Type: TE
          24018
          24010
    Preference: 60 (configuration) (standby)
      Name: NCP_STATIC
      Requested BSID: 5000
      PCC info:
        Symbolic name: cfg_NCP_STATIC_discr_60
        PLSP-ID: 4
        Protection Type: protected-preferred
        Maximum SID Depth: 10
      Explicit: segment-list STANDBY2 (valid)
        Reverse: segment-list REVERSE_STANDBY2
        Weight: 1, Metric Type: TE
          24014
    Preference: 40 (configuration)
      Name: NCP_STATIC
      Requested BSID: 5000
      PCC info:
        Symbolic name: cfg_NCP_STATIC_discr_40
        PLSP-ID: 5
        Protection Type: protected-preferred
```

```
        Maximum SID Depth: 10
      Dynamic (valid)
        Metric Type: TE,   Path Accumulated Metric: 10
          24005 [Adjacency-SID, 13.13.13.1 - 13.13.13.4]
    Preference: 30 (configuration)
      Name: NCP_STATIC
      Requested BSID: 5000
      PCC info:
        Symbolic name: cfg_NCP_STATIC_discr_30
        PLSP-ID: 1
        Protection Type: protected-preferred
        Maximum SID Depth: 10
      Dynamic (pce 1.1.1.4) (valid)
        Metric Type: TE,   Path Accumulated Metric: 10
          24015 [Adjacency-SID, 13.13.13.1 - 13.13.13.4]
    Preference: 20 (configuration)
      Name: NCP_STATIC
      Requested BSID: 5000
      PCC info:
        Symbolic name: cfg_NCP_STATIC_discr_20
        PLSP-ID: 6
        Protection Type: protected-preferred
        Maximum SID Depth: 10
      Explicit: segment-list WORKING2 (valid)
        Reverse: segment-list REVERSE_WORKING2
        Weight: 1, Metric Type: TE
          24012
          24012
    Preference: 10 (configuration)
      Name: NCP_STATIC
      Requested BSID: 5000
      PCC info:
        Symbolic name: cfg_NCP_STATIC_discr_10
        PLSP-ID: 7
        Protection Type: protected-preferred
        Maximum SID Depth: 10
      Explicit: segment-list WORKING3 (valid)
        Reverse: segment-list REVERSE_WORKING3
        Weight: 1, Metric Type: TE
          24010
          24014
          24010
  Attributes:
    Binding SID: 5000
    Forward Class: Not Configured
    Steering labeled-services disabled: no
    Steering BGP disabled: no
    IPv6 caps enable: yes
    Invalidation drop enabled: no
    Max Install Standby CPaths: 2


Router# show segment-routing traffic-eng forwarding policy

SR-TE Policy Forwarding database
--------------------------------

Color: 50, End-point: 1.1.1.4
  Name: srte_c_50_ep_1.1.1.4
  Binding SID: 5000
  Active LSP:
    Candidate path:
      Preference: 100 (configuration)
      Name: NCP_STATIC
```

```
    Local label: 24021
    Segment lists:
      SL[0]:
        Name: WORKING
        Switched Packets/Bytes: 0/0
        Paths:
          Path[0]:
            Outgoing Label: 24012
            Outgoing Interfaces: GigabitEthernet0/0/0/0
            Next Hop: 10.10.10.2
            Switched Packets/Bytes: 0/0
            FRR Pure Backup: No
            ECMP/LFA Backup: No
            Internal Recursive Label: Unlabelled (recursive)
            Label Stack (Top -> Bottom): { 24012 }
  Standby LSP(s):
    LSP[0]:
      Candidate path:
        Preference: 80 (configuration)
        Name: NCP_STATIC
      Local label: 24024
      Segment lists:
        SL[0]:
          Name: STANDBY1
          Switched Packets/Bytes: 0/0
          Paths:
            Path[0]:
              Outgoing Label: 24010
              Outgoing Interfaces: GigabitEthernet0/0/0/2
              Next Hop: 12.12.12.3
              Switched Packets/Bytes: 0/0
              FRR Pure Backup: No
              ECMP/LFA Backup: No
              Internal Recursive Label: Unlabelled (recursive)
              Label Stack (Top -> Bottom): { 24010 }
    LSP[1]:
      Candidate path:
        Preference: 60 (configuration)
        Name: NCP_STATIC
      Local label: 24025
      Segment lists:
        SL[0]:
          Name: STANDBY2
          Switched Packets/Bytes: 0/0
          Paths:
            Path[0]:
              Outgoing Label: Pop
              Outgoing Interfaces: GigabitEthernet0/0/0/3
              Next Hop: 13.13.13.4
              Switched Packets/Bytes: 0/0
              FRR Pure Backup: No
              ECMP/LFA Backup: No
              Internal Recursive Label: Unlabelled (recursive)
              Label Stack (Top -> Bottom): { Pop }

  Policy Packets/Bytes Switched: 2/136
```

# LDP over Segment Routing Policy

The LDP over Segment Routing Policy feature enables an LDP-targeted adjacency over a Segment Routing (SR) policy between two routers. This feature extends the existing MPLS LDP address family neighbor configuration to specify an SR policy as the targeted end-point.

LDP over SR policy is supported for locally configured SR policies with IPv4 end-points.

For more information about MPLS LDP, see the "Implementing MPLS Label Distribution Protocol" chapter in the *MPLS Configuration Guide*.

For more information about Autoroute, see the *Autoroute Announce for SR-TE* section.

**Note** Before you configure an LDP targeted adjacency over SR policy name, you need to create the SR policy under Segment Routing configuration. The SR policy interface names are created internally based on the color and endpoint of the policy. LDP is non-operational if SR policy name is unknown.

The following functionality applies:

1. Configure the SR policy – LDP receives the associated end-point address from the interface manager (IM) and stores it in the LDP interface database (IDB) for the configured SR policy.
2. Configure the SR policy name under LDP – LDP retrieves the stored end-point address from the IDB and uses it. Use the auto-generated SR policy name assigned by the router when creating an LDP targeted adjacency over an SR policy. Auto-generated SR policy names use the following naming convention: **srte_c_***color_val***_ep_***endpoint-address*. For example, **srte_c_1000_ep_10.1.1.2**

### Configuration Example

```
/* Enter the SR-TE configuration mode and create the SR policy. This example corresponds
to a local SR policy with an explicit path. */
Router(config)# segment-routing
Router(config-sr)# traffic-eng
Router(config-sr-te)# segment-list sample-sid-list
Router(config-sr-te-sl)# index 10 address ipv4 10.1.1.7
Router(config-sr-te-sl)# index 20 address ipv4 10.1.1.2
Router(config-sr-te-sl)# exit
Router(config-sr-te)# policy sample_policy
Router(config-sr-te-policy)# color 1000 end-point ipv4 10.1.1.2
Router(config-sr-te-policy)# candidate-paths
Router(config-sr-te-policy-path)# preference 100
Router(config-sr-te-policy-path-pref)# explicit segment-list sample-sid-list
Router(config-sr-te-pp-info)# end

/* Configure LDP over an SR policy */
Router(config)# mpls ldp
Router(config-ldp)# address-family ipv4
Router(config-ldp-af)# neighbor sr-policy srte_c_1000_ep_10.1.1.2 targeted
Router(config-ldp-af)#
```

**Note** Do one of the following to configure LDP discovery for targeted hellos:

- Active targeted hellos (SR policy head end):

```
mpls ldp
 interface GigabitEthernet0/0/0/0
 !
!
```

- Passive targeted hellos (SR policy end-point):

```
mpls ldp
 address-family ipv4
  discovery targeted-hello accept
 !
!
```

### Running Configuration

```
segment-routing
 traffic-eng
  segment-list sample-sid-list
   index 10 address ipv4 10.1.1.7
   index 20 address ipv4 10.1.1.2
  !
  policy sample_policy
   color 1000 end-point ipv4 10.1.1.2
   candidate-paths
    preference 100
     explicit segment-list sample-sid-list
     !
    !
   !
  !
 !
!

mpls ldp
 address-family ipv4
  neighbor sr-policy srte_c_1000_ep_10.1.1.2 targeted
  discovery targeted-hello accept
 !
!
```

### Verification

```
Router# show mpls ldp interface brief
Interface       VRF Name            Config Enabled IGP-Auto-Cfg TE-Mesh-Grp cfg
--------------- ------------------- ------ ------- ------------ ---------------
Te0/3/0/0/3     default             Y      Y       0            N/A
Te0/3/0/0/6     default             Y      Y       0            N/A
Te0/3/0/0/7     default             Y      Y       0            N/A
Te0/3/0/0/8     default             N      N       0            N/A
Te0/3/0/0/9     default             N      N       0            N/A
srte_c_1000_    default             Y      Y       0            N/A


Router# show mpls ldp interface
Interface TenGigE0/3/0/0/3 (0xa000340)
   VRF: 'default' (0x60000000)
```

```
   Enabled via config: LDP interface
Interface TenGigE0/3/0/0/6 (0xa000400)
   VRF: 'default' (0x60000000)
   Enabled via config: LDP interface
Interface TenGigE0/3/0/0/7 (0xa000440)
   VRF: 'default' (0x60000000)
   Enabled via config: LDP interface
Interface TenGigE0/3/0/0/8 (0xa000480)
   VRF: 'default' (0x60000000)
   Disabled:
Interface TenGigE0/3/0/0/9 (0xa0004c0)
   VRF: 'default' (0x60000000)
   Disabled:
Interface srte_c_1000_ep_10.1.1.2 (0x520)
   VRF: 'default' (0x60000000)
   Enabled via config: LDP interface


Router# show segment-routing traffic-eng policy color 1000

SR-TE policy database
---------------------

Color: 1000, End-point: 10.1.1.2
  Name: srte_c_1000_ep_10.1.1.2
  Status:
    Admin: up  Operational: up for 00:02:00 (since Jul  2 22:39:06.663)
  Candidate-paths:
    Preference: 100 (configuration) (active)
      Name: sample_policy
      Requested BSID: dynamic
      PCC info:
        Symbolic name: cfg_sample_policy_discr_100
        PLSP-ID: 17
      Explicit: segment-list sample-sid-list (valid)
        Weight: 1, Metric Type: TE
          16007 [Prefix-SID, 10.1.1.7]
          16002 [Prefix-SID, 10.1.1.2]
  Attributes:
    Binding SID: 80011
    Forward Class: 0
    Steering BGP disabled: no
    IPv6 caps enable: yes


Router# show mpls ldp neighbor 10.1.1.2 detail

Peer LDP Identifier: 10.1.1.2:0
  TCP connection: 10.1.1.2:646 - 10.1.1.6:57473
  Graceful Restart: No
  Session Holdtime: 180 sec
  State: Oper; Msgs sent/rcvd: 421/423; Downstream-Unsolicited
  Up time: 05:22:02
  LDP Discovery Sources:
    IPv4: (1)
      Targeted Hello (10.1.1.6 -> 10.1.1.2, active/passive)
    IPv6: (0)
  Addresses bound to this peer:
    IPv4: (9)
      10.1.1.2       2.2.2.99       10.1.2.2       10.2.3.2
      10.2.4.2       10.2.22.2      10.2.222.2     10.30.110.132
      11.2.9.2
    IPv6: (0)
  Peer holdtime: 180 sec; KA interval: 60 sec; Peer state: Estab
```

```
NSR: Disabled
Clients: LDP over SR Policy
Capabilities:
  Sent:
    0x508  (MP: Point-to-Multipoint (P2MP))
    0x509  (MP: Multipoint-to-Multipoint (MP2MP))
    0x50a  (MP: Make-Before-Break (MBB))
    0x50b  (Typed Wildcard FEC)
  Received:
    0x508  (MP: Point-to-Multipoint (P2MP))
    0x509  (MP: Multipoint-to-Multipoint (MP2MP))
    0x50a  (MP: Make-Before-Break (MBB))
    0x50b  (Typed Wildcard FEC)
```

# Configure Seamless Bidirectional Forwarding Detection

Bidirectional forwarding detection (BFD) provides low-overhead, short-duration detection of failures in the path between adjacent forwarding engines. BFD allows a single mechanism to be used for failure detection over any media and at any protocol layer, with a wide range of detection times and overhead. The fast detection of failures provides immediate reaction to failure in the event of a failed link or neighbor.

In BFD, each end of the connection maintains a BFD state and transmits packets periodically over a forwarding path. Seamless BFD (SBFD) is unidirectional, resulting in faster session activation than BFD. The BFD state and client context is maintained on the head-end (initiator) only. The tail-end (reflector) validates the BFD packet and responds, so there is no need to maintain the BFD state on the tail-end.

### Initiators and Reflectors

SBFD runs in an asymmetric behavior, using initiators and reflectors.

The following figure represents the roles of the SBFD initiator and reflector.

***Figure 24: SBFD Initiator and Reflector***

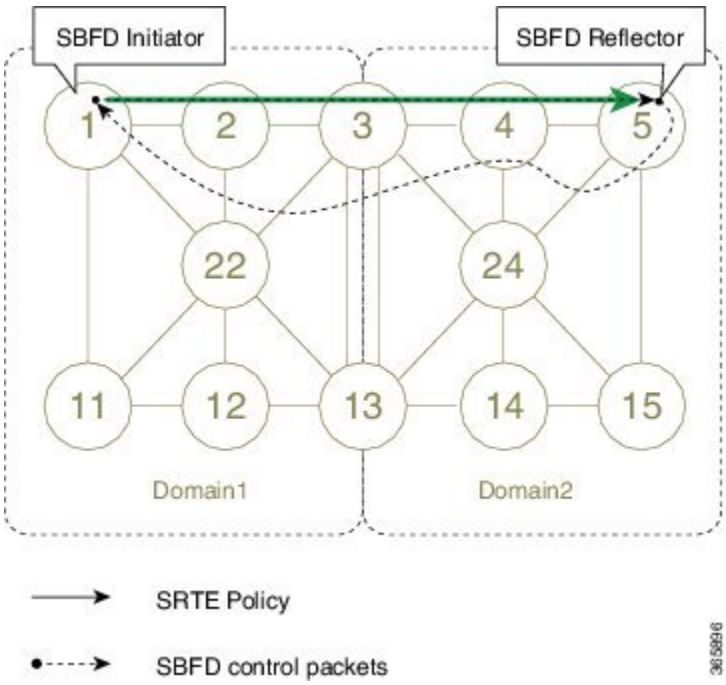

The initiator is an SBFD session on a network node that performs a continuity test to a remote entity by sending SBFD packets. The initiator injects the SBFD packets into the segment-routing traffic-engineering (SRTE) policy. The initiator triggers the SBFD session and maintains the BFD state and client context.

The reflector is an SBFD session on a network node that listens for incoming SBFD control packets to local entities and generates response SBFD control packets. The reflector is stateless and only reflects the SBFD packets back to the initiator.

A node can be both an initiator and a reflector, if you want to configure different SBFD sessions.

For SR-TE, SBFD control packets are label switched in forward and reverse direction. For SBFD, the tail-end node is the reflector node; other nodes cannot be a reflector. When using SBFD with SR-TE, if the forward and return directions are label-switched paths, SBFD need not be configured on the reflector node.

### Discriminators

The BFD control packet carries 32-bit discriminators (local and remote) to demultiplex BFD sessions. SBFD requires globally unique SBFD discriminators that are known by the initiator.

The SBFD control packets contain the discriminator of the initiator, which is created dynamically, and the discriminator of the reflector, which is configured as a local discriminator on the reflector.

## Configure the SBFD Reflector

To ensure the SBFD packet arrives on the intended reflector, each reflector has at least one globally unique discriminator. Globally unique discriminators of the reflector are known by the initiator before the session starts. An SBFD reflector only accepts BFD control packets where "Your Discriminator" is the reflector discriminator.

This task explains how to configure local discriminators on the reflector.

### Before you begin

Enable mpls oam on the reflector to install a routing information base (RIB) entry for 127.0.0.0/8.

```
Router_5# configure
Router_5(config)# mpls oam
Router_5(config-oam)#
```

### SUMMARY STEPS

1. **configure**
2. **sbfd**
3. **local-discriminator** {*ipv4-address* | *32-bit-value* | **dynamic** | **interface** *interface*}
4. **commit**

### DETAILED STEPS

| | Command or Action | Purpose |
|---|---|---|
| **Step 1** | **configure**<br>**Example:**<br>`RP/0/RSP0/CPU0:router# configure` | Enters global configuration mode. |

| | Command or Action | Purpose |
|---|---|---|
| **Step 2** | **sbfd**<br>**Example:**<br>`Router_5(config)# sbfd` | Enters SBFD configuration mode. |
| **Step 3** | **local-discriminator** {*ipv4-address* \| *32-bit-value* \| **dynamic** \| **interface** *interface*}<br>**Example:**<br>`Router_5(config-sbfd)# local-discriminator 10.1.1.5`<br>`Router_5(config-sbfd)# local-discriminator 987654321`<br>`Router_5(config-sbfd)# local-discriminator dynamic`<br>`Router_5(config-sbfd)# local-discriminator interface Loopback0` | Configures the local discriminator. You can configure multiple local discriminators. |
| **Step 4** | **commit** | |

Verify the local discriminator configuration.

#### Example

```
Router_5# show bfd target-identifier local

Local Target Identifier Table
-----------------------------
Discr       Discr Src   VRF       Status   Flags
                        Name
-----       ---------   -------   -------- --------
16843013    Local       default   enable   -----ia-
987654321   Local       default   enable   ----v---
2147483649  Local       default   enable   -------d

Legend: TID - Target Identifier
        a   - IP Address mode
        d   - Dynamic mode
        i   - Interface mode
        v   - Explicit Value mode
```

#### What to do next

Configure the SBFD initiator.

## Configure the SBFD Initiator

Perform the following configurations on the SBFD initiator.

### Enable Line Cards to Host BFD Sessions

The SBFD initiator sessions are hosted by the line card CPU.

This task explains how to enable line cards to host BFD sessions.

#### SUMMARY STEPS

1. **configure**
2. **bfd**
3. **multipath include location** *node-id*

#### DETAILED STEPS

| | Command or Action | Purpose |
|---|---|---|
| **Step 1** | **configure**<br>**Example:**<br>`RP/0/RSP0/CPU0:router# configure` | Enters global configuration mode. |
| **Step 2** | **bfd**<br>**Example:**<br>`Router_1(config)# bfd` | Enters BFD configuration mode. |
| **Step 3** | **multipath include location** *node-id*<br>**Example:**<br>`Router_1(config-bfd)# multipath include location 0/1/CPU0`<br>`Router_1(config-bfd)# multipath include location 0/2/CPU0`<br>`Router_1(config-bfd)# multipath include location 0/3/CPU0` | Configures BFD multiple path on specific line card. Any of the configured line cards can be instructed to host a BFD session. |

#### What to do next

Map a destination address to a remote discriminator.

### Map a Destination Address to a Remote Discriminator

The SBFD initiator uses a Remote Target Identifier (RTI) table to map a destination address (Target ID) to a remote discriminator.

This task explains how to map a destination address to a remote discriminator.

#### SUMMARY STEPS

1. **configure**
2. **sbfd**
3. **remote-target ipv4** *ipv4-address*

4. **remote-discriminator** *remote-discriminator*

## DETAILED STEPS

| | Command or Action | Purpose |
|---|---|---|
| **Step 1** | **configure**<br>**Example:**<br>`RP/0/RSP0/CPU0:router# configure` | Enters global configuration mode. |
| **Step 2** | **sbfd**<br>**Example:**<br>`Router_1(config)# sbfd` | Enters SBFD configuration mode. |
| **Step 3** | **remote-target ipv4** *ipv4-address*<br>**Example:**<br>`Router_1(config-sbfd)# remote-target ipv4 10.1.1.5` | Configures the remote target. |
| **Step 4** | **remote-discriminator** *remote-discriminator*<br>**Example:**<br>`Router_1(config-sbfd-nnnn)# remote-discriminator 16843013` | Maps the destination address (Target ID) to a remote discriminator. |

Verify the remote discriminator configuration.

### Example

```
Router_1# show bfd target-identifier remote

Remote Target Identifier Table
------------------------------
Discr       Discr Src   VRF        TID Type   Status
            Target ID   Name
------      ---------   -------    --------   ------
16843013    Remote      default    ipv4       enable
            10.1.1.5

Legend: TID - Target Identifier
```

### What to do next

Enable SBFD on an SR-TE policy.

## Enable Seamless BFD Under an SR-TE Policy or SR-ODN Color Template

This example shows how to enable SBFD on an SR-TE policy or an SR on-demand (SR-ODN) color template.

**Note** Do not use BFD with disjoint paths. The reverse path might not be disjoint, causing a single link failure to bring down BFD sessions on both the disjoint paths.

### Enable BFD

- Use the **bfd** command in SR-TE policy configuration mode to enable BFD and enters BFD configuration mode.

```
Router(config)# segment-routing traffic-eng
Router(config-sr-te)# policy POLICY1
Router(config-sr-te-policy)# bfd
Router(config-sr-te-policy-bfd)#
```

  Use the **bfd** command in SR-ODN configuration mode to enable BFD and enters BFD configuration mode.

```
Router(config)# segment-routing traffic-eng
Router(config-sr-te)# on-demand color 10
Router(config-sr-te-color)# bfd
Router(config-sr-te-color-bfd)#
```

### Configure BFD Options

- Use the **minimum-interval** *milliseconds* command to set the interval between sending BFD hello packets to the neighbor. The range is from 15 to 200. The default is 15.

```
Router(config-sr-te-policy-bfd)# minimum-interval 50
```

- Use the **multiplier** *multiplier* command to set the number of times a packet is missed before BFD declares the neighbor down. The range is from 2 to 10. The default is 3.

```
Router(config-sr-te-policy-bfd)# multiplier 2
```

- Use the **invalidation-action** {**down** | **none**} command to set the action to be taken when BFD session is invalidated.
  - **down**: LSP can only be operationally up if the BFD session is up
  - **none**: BFD session state does not affect LSP state, use for diagnostic purposes

```
Router(config-sr-te-policy-bfd)# invalidation-action down
```

- (**SR-TE policy only**) Use the **reverse-path binding-label** *label* command to specify BFD packets return to head-end by using a binding label.

  By default, the S-BFD return path (from tail-end to head-end) is via IPv4. You can use a reverse binding label so that the packet arrives at the tail-end with the reverse binding label as the top label. This label

is meant to point to a policy that will take the BFD packets back to the head-end. The reverse binding label is configured per-policy.

Note that when MPLS return path is used, BFD uses echo mode packets, which means the tail-end's BFD reflector does not process BFD packets at all.

The MPLS label value at the tail-end and the head-end must be synchronized by the operator or controller. Because the tail-end binding label should remain constant, configure it as an explicit BSID, rather than dynamically allocated.

```
Router(config-sr-te-policy-bfd)# reverse-path binding-label 24036
```

- Use the **logging session-state-change** command to log when the state of the session changes

```
Router(config-sr-te-policy-bfd)# logging session-state-change
```

### Examples

This example shows how to enable SBFD on an SR-TE policy.

```
Router(config)# segment-routing traffic-eng
Router(config-sr-te)# policy POLICY1
Router(config-sr-te-policy)# bfd
Router(config-sr-te-policy-bfd)# invalidation-action down
Router(config-sr-te-policy-bfd)# minimum-interval 50
Router(config-sr-te-policy-bfd)# multiplier 2
Router(config-sr-te-policy-bfd)# reverse-path binding-label 24036
Router(config-sr-te-policy-bfd)# logging session-state-change
```

```
segment-routing
 traffic-eng
  policy POLICY1
   bfd
    minimum-interval 50
    multiplier 2
    invalidation-action down
    reverse-path
     binding-label 24036
    !
    logging
     session-state-change
    !
   !
  !
 !
!
```

This example shows how to enable SBFD on an SR-ODN color.

```
Router(config)# segment-routing traffic-eng
Router(config-sr-te)# on-demand color 10
Router(config-sr-te-color)# bfd
Router(config-sr-te-color-bfd)# minimum-interval 50
Router(config-sr-te-color-bfd)# multiplier 2
Router(config-sr-te-color-bfd)# logging session-state-change
Router(config-sr-te-color-bfd)# invalidation-action down
```

```
segment-routing
 traffic-eng
```

```
  on-demand color 10
   bfd
    minimum-interval 50
    multiplier 2
    invalidation-action down
    logging
     session-state-change
    !
   !
  !
 !
!
```

# SR-TE Head-End IPv4 Unnumbered Interface Support

This feature allows IPv4 unnumbered interfaces to be part of an SR-TE head-end router topology database.

An unnumbered IPv4 interface is not identified by its own unique IPv4 address. Instead, it is identified by the router ID of the node where this interfaces resides and the local SNMP index assigned for this interface.

This feature provides enhancements to the following components:

- IGPs (IS-IS and OSPF):
  - Support the IPv4 unnumbered interfaces in the SR-TE context by flooding the necessary interface information in the topology
- SR-PCE:

**Note** SR-PCE and path computation clients (PCCs) need to be running Cisco IOS XR 7.0.2 or later.

  - Compute and return paths from a topology containing IPv4 unnumbered interfaces.
  - Process reported SR policies from a head-end router that contain hops with IPv4 unnumbered adjacencies.

    PCEP extensions for IPv4 unnumbered interfaces adhere to IETF RFC8664 “PCEP Extensions for Segment Routing” (https://datatracker.ietf.org/doc/rfc8664/). The unnumbered hops use a Node or Adjacency Identifier (NAI) of type 5. This indicates that the segment in the explicit routing object (ERO) is an unnumbered adjacency with an IPv4 ID and an interface index.
- SR-TE process at the head-end router:
  - Compute its own local path over a topology, including unnumbered interfaces.
  - Process PCE-computed paths that contain hops with IPv4 unnumbered interfaces.
  - Report a path that contains hops with IPv4 unnumbered interfaces to the PCE.

### Configuration Example

The following example shows how to configure an IPv4 unnumbered interface:

```
RP/0/0/CPU0:rtrA(config)# interface GigabitEthernet0/0/0/0
RP/0/0/CPU0:rtrA(config-if)# ipv4 point-to-point
RP/0/0/CPU0:rtrA(config-if)# ipv4 unnumbered Loopback0
```

To bring up the IPv4 unnumbered adjacency under the IGP, configure the link as point-to-point under the IGP configuration. The following example shows how to configure the link as point-to-point under the IGP configuration:

```
RP/0/0/CPU0:rtrA(config)# router ospf one
RP/0/0/CPU0:rtrA(config-ospf)# area 0
RP/0/0/CPU0:rtrA(config-ospf-ar)# interface GigabitEthernet0/0/0/0
RP/0/0/CPU0:rtrA(config-ospf-ar-if)# network point-to-point
```

### Verification

Use the **show ipv4 interface** command to display information about the interface:

```
RP/0/0/CPU0:rtrA# show ipv4 interface GigabitEthernet0/0/0/0 brief
Tue Apr  2 12:59:53.140 EDT
Interface                      IP-Address      Status                Protocol
GigabitEthernet0/0/0/0         192.168.0.1     Up                    Up
```

This interface shows the IPv4 address of Loopback0.

Use the **show snmp interface** command to find the SNMP index for this interface:

```
RP/0/0/CPU0:rtrA# show snmp interface
Tue Apr  2 13:02:49.190 EDT
ifName : Null0                 ifIndex : 3
ifName : Loopback0             ifIndex : 10
ifName : GigabitEthernet0/0/0/0  ifIndex : 6
```

The interface is identified with the pair (IPv4:192.168.0.1, index:6).

Use the **show ospf neighbor** command to display the adjacency:

```
RP/0/0/CPU0:rtrA# show ospf neighbor gigabitEthernet 0/0/0/0 detail
…
Neighbor 192.168.0.4, interface address 192.168.0.4
    In the area 0 via interface GigabitEthernet0/0/0/0
    Neighbor priority is 1, State is FULL, 6 state changes
    …
    Adjacency SIDs:
        Label: 24001,    Dynamic, Unprotected
    Neighbor Interface ID: 4
```

The output of the **show segment-routing traffic-eng ipv4 topology** command is enhanced to display the interface index instead of the IP address for unnumbered interfaces:

```
RP/0/0/CPU0:rtrA# show segment-routing traffic-eng ipv4 topology
…
  Link[2]: Unnumbered local index 6, remote index 4
    Local node:
      OSPF router ID: 192.168.0.1 area ID: 0 ASN: 0
    Remote node:
      TE router ID: 192.168.0.4
      OSPF router ID: 192.168.0.4 area ID: 0 ASN: 0
    Metric: IGP 1, TE 1, Latency 1 microseconds
    Bandwidth: Total 125000000 Bps, Reservable 0 Bps
    Admin-groups: 0x00000000
```

```
    Adj SID: 24001 (unprotected)
```

The output of the **show segment-routing traffic-eng policy detail** command includes unnumbered hops:

```
RP/0/0/CPU0:rtrA# show segment-routing traffic-eng policy detail
…
      Dynamic (pce 192.168.0.5) (valid)
        Metric Type: TE,   Path Accumulated Metric: 3
          24001 [Adjacency-SID, unnumbered 192.168.0.1(6) - 192.168.0.4(4)]
          24002 [Adjacency-SID, unnumbered 192.168.0.4(7) - 192.168.0.3(7)]
          24000 [Adjacency-SID, unnumbered 192.168.0.3(5) - 192.168.0.2(5)]
…
```

# Path Invalidation Drop

*Table 43: Feature History Table*

| Feature Name | Release Information | Feature Description |
|---|---|---|
| Path Invalidation Drop | Release 7.4.1 | By default, if an SR Policy becomes invalid (for example, if there is no valid candidate path available), traffic falls back to the native SR forwarding path. In some scenarios, a network operator may require that certain traffic be only carried over the path associated with an SR policy and never allow the native SR LSP to be used.<br><br>This feature allows the SR policy to stay up in the control plane (to prevent prefixes mapped to the SR policy from falling back to the native SR LSP) but drop the traffic sent on the SR policy. |

By default, if an SR Policy becomes invalid, traffic would fall back to the native SR forwarding path.

In some scenarios, a network operator may require that certain traffic be only carried over the path associated with an SR policy and never allow the native SR LSP to be used. The SR-TE Path Invalidation Drop feature is introduced to meet this requirement.

With the Path Invalidation Drop feature enabled, an SR policy that would become invalid (for example, no valid candidate path available) is programmed to drop traffic. At the same time, the SR policy stays up in the control plane to prevent prefixes mapped to the SR policy from falling back to the native SR LSP.

When the SR policy becomes valid again, forwarding over the SR policy resumes.

**Note** This feature takes effect when an SR policy transitions from valid to invalid; it does not take effect when an SR policy has never been declared valid.

### Enable Path Invalidation Drop for Manual SR Policy

Use the **segment-routing traffic-eng policy** *name* **steering path-invalidation drop** command to enable the dropping of traffic when an SR Policy becomes invalid.

```
segment-routing
 traffic-eng
  policy foo
   steering
    path-invalidation drop
```

### Enable Path Invalidation Drop for On-Demand SR Policy

Use the **segment-routing traffic-eng on-demand color** *color* **steering path-invalidation drop** command (where *color* is from 1 to 4294967295) to enable the dropping of traffic when an On-Demand SR Policy becomes invalid.

```
segment-routing
 traffic-eng
  on-demand color 10
    steering
      path-invalidation drop
```

### Enable Path Invalidation Drop for PCE-Initiated SR Policy

Use the **segment-routing traffic-eng pcc profile** *profile* **steering path-invalidation drop** command (where *profile* is from 1 to 65534) to enable the dropping of traffic when a PCE-Initiated SR Policy becomes invalid.

```
segment-routing
 traffic-eng
  pcc
   profile 7
    steering
     path-invalidation drop
```

### Verification

Use the **show segment-routing traffic-eng policy** command to display SR policy information.

The following output shows an SR policy in the Up state with path-invalidation drop:

```
Router# show segment-routing traffic-eng policy

SR-TE policy database
-------------------------

Color: 4, End-point: 10.1.1.4
  Name: srte_c_4_ep_10.1.1.4
  Status:
    Admin: up  Operational: up(path-invalidation drop) for 00:09:02 (since May 19
12:07:14.526)
  Candidate-paths:
    Preference: 200 (BGP ODN) (shutdown)
      Requested BSID: dynamic
        Protection Type: protected-preferred
        Maximum SID Depth: 10
      Dynamic (invalid)
        Metric Type: TE,   Path Accumulated Metric: 0
    Preference: 100 (BGP ODN) (active)
      Requested BSID: dynamic
```

```
      PCC info:
        Symbolic name: bgp_c_4_ep_10.1.1.4_discr_100
        PLSP-ID: 1
        Protection Type: protected-preferred
        Maximum SID Depth: 10
      Dynamic (pce) (invalid)
      Last error: No path
        Metric Type: TE,   Path Accumulated Metric: 40
  Attributes:
    Binding SID: 24015
    Forward Class: Not Configured
    Steering labeled-services disabled: no
    Steering BGP disabled: no
    IPv6 caps enable: yes
    Invalidation drop enabled: yes

Router# show segment-routing traffic-eng policy detail

SR-TE policy database
---------------------

Color: 4, End-point: 10.1.1.4
  Name: srte_c_4_ep_10.1.1.4
  Status:
    Admin: up  Operational: up for 00:09:02 (since May 19 12:07:14.526)
  Candidate-paths:
    Preference: 100 (BGP ODN) (active)
      Name: test1
      Requested BSID: dynamic
        Protection Type: protected-only
        Maximum SID Depth: 10
      Explicit: segment-list list1 (invalid)
      Last error: No path
        Weight: 1, Metric Type: TE
  LSPs:
    LSP[0]:
      LSP-ID: 4 policy ID: 2 (active)
      Local label: 24025
      State: Invalidated traffic dropped
      Binding SID: 24029
  Attributes:
    Binding SID: 24015
    Forward Class: Not Configured
    Steering labeled-services disabled: no
    Steering BGP disabled: no
    IPv6 caps enable: yes
    Invalidation drop enabled: yes
```

When the policy is in "Invalidated traffic dropped" state, as observed in the output above, use the **show mpls forwarding tunnels detail** command to display the forwarding information. The following output shows that the traffic is dropped with forwarding output indicating "Control plane programmed to drop".

```
Router# show mpls forwarding tunnels detail

Tunnel                     Outgoing    Outgoing     Next Hop        Bytes
Name                       Label       Interface                    Switched
-------------------------- ----------- ------------ --------------- ------------
srte_c_4_ep_10.1.1.4(SR)   ?           ?            ?               ?

  Tunnel resolution: Incomplete (Control plane programmed to drop)
  Interface:
    Name: srte_c_4_ep_10.1.1.4 (ifhandle 0x000040f0)
    Local Label: 24025, Forwarding Class: 0, Weight: 0
```

```
Packets/Bytes Switched: 0/0
```

### Configuring Path Invalidation Drop with Performance Measurement Liveness Detection

The Path Invalidation Drop feature can work alongside the **invalidation-action down** configuration in the Performance Measurement Liveness Detection feature. The Performance Measurement Liveness Detection feature enables end-to-end SR policy liveness detection for all segment lists of the active and standby candidate paths that are in the forwarding table. When **invalidation-action down** is configured and a candidate path becomes invalid, the candidate path is immediately operationally brought down and becomes invalid.

See SR Policy Liveness Monitoring, on page 505 for information about configuring liveness detection and the invalidation action.

When both **path-invalidation drop** and **performance-measurement liveness-detection invalidation-action down** are enabled, the following behavior is observed:

1. If the PM liveness session goes down, the candidate path becomes invalid and is immediately operationally brought down.
2. SR-TE path re-optimization occurs to find a new valid candidate path.
3. If no valid candidate path is found, the SR policy is kept UP in the control plane, but the traffic sent on the SR policy is dropped.

## SR-TE Reoptimization Timers

SR-TE path re-optimization occurs when the head-end determines that there is a more optimal path available than the one currently used. For example, in case of a failure along the SR-TE LSP path, the head-end could detect and revert to a more optimal path by triggering re-optimization.

Re-optimization can occur due to the following events:

- The explicit path hops used by the primary SR-TE LSP explicit path are modified
- The head-end determines the currently used path-option are invalid due to either a topology path disconnect, or a missing SID in the SID database that is specified in the explicit-path
- A more favorable path-option (lower index) becomes available

For event-based re-optimization, you can specify various delay timers for path re-optimization. For example, you can specify how long to wait before switching to a reoptimized path

Additionally, you can configure a timer to specify how often to perform reoptimization of policies. You can also trigger an immediate reoptimization for a specific policy or for all policies.

### SR-TE Reoptimization

To trigger an immediate SR-TE reoptimization, use the **segment-routing traffic-eng reoptimization** command in Exec mode:

```
Router# segment-routing traffic-eng reoptimization {all | name  policy}
```

Use the **all** option to trigger an immediate reoptimization for all policies. Use the **name** *policy* option to trigger an immediate reoptimization for a specific policy.

### Configuring SR-TE Reoptimization Timers

Use these commands in SR-TE configuration mode to configure SR-TE reoptimization timers:

- **timers candidate-path cleanup-delay** *seconds*—Specifies the delay before cleaning up candidate paths, in seconds. The range is from 0 (immediate clean-up) to 86400; the default value is 120
- **timers cleanup-delay** *seconds*—Specifies the delay before cleaning up previous path, in seconds. The range is from 0 (immediate clean-up) to 300; the default value is 10.
- **timers init-verify-restart** *seconds* —Specifies the delay for topology convergence after the topology starts populating due to a restart, in seconds. The range is from 10 to 10000; the default is 40.
- **timers init-verify-startup** *seconds*—Specifies the delay for topology convergence after topology starts populating for due to startup, in seconds. The range is from 10 to 10000; the default is 300
- **timers init-verify-switchover** *seconds*—Specifies the delay for topology convergence after topology starts populating due to a switchover, in seconds. The range is from 10 to 10000; the default is 60.
- **timers install-delay** *seconds*—Specifies the delay before switching to a reoptimized path, in seconds. The range is from 0 (immediate installation of new path) to 300; the default is 10.
- **timers periodic-reoptimization** *seconds*—Specifies how often to perform periodic reoptimization of policies, in seconds. The range is from 0 to 86400; the default is 600.

### Example Configuration

```
Router(config)# segment-routing traffic-eng
Router(config-sr-te)# timers
Router(config-sr-te-timers)# candidate-path cleanup-delay 600
Router(config-sr-te-timers)# cleanup-delay 60
Router(config-sr-te-timers)# init-verify-restart 120
Router(config-sr-te-timers)# init-verify-startup 600
Router(config-sr-te-timers)# init-verify-switchover 30
Router(config-sr-te-timers)# install-delay 60
Router(config-sr-te-timers)# periodic-reoptimization 3000
```

### Running Config

```
segment-routing
 traffic-eng
  timers
   install-delay 60
   periodic-reoptimization 3000
   cleanup-delay 60
   candidate-path cleanup-delay 600
   init-verify-restart 120
   init-verify-startup 600
   init-verify-switchover 30
  !
 !
!
```

# Circuit-Style SR-TE Policies

*Table 44: Feature History Table*

| Feature Name | Release Information | Feature Description |
|---|---|---|
| Circuit-Style SR-TE Policies | Release 7.8.1 | This solution allows Segment Routing to meet the requirements of a connection-oriented transport network, which was historically delivered over circuit-switched SONET/SDH networks.<br><br>Circuit-style SR-TE policies allow a common network infrastructure to be used for both connection-oriented services and classic IP-based transport. This eliminates the need for multiple parallel networks, which greatly reduces both capital expenditures (CapEx) and operating expenditures (OpEx). |

Segment Routing provides an architecture that caters to both connectionless transport (such as IP) as well as connection-oriented transport (such as TDM). IP-centric transport uses the benefits of ECMP and automated/optimum protection from TI-LFA. On the other hand, connection-oriented transport, which was historically delivered over circuit-switched SONET/SDH networks, requires the following:

- End-to-end bidirectional transport that provides congruent forward and reverse paths, predictable latency, and disjointness
- Bandwidth commitment to ensure there is no impact on the SLA due to network load from other services
- Monitoring and maintenance of path integrity with end-to-end 50-msec path protection
- Persistent end-to-end paths regardless of control-plane state

An SR network can satisfy these requirements by leveraging Circuit-Style SR-TE policies (CS-SR policies).

### Properties of Circuit-Style SR Policies

CS-SR polices have the following properties:

- **Guaranteed Latency over Non-ECMP Paths**

  Consider the network below with three possible paths from node 1 to node 7. Of the three paths, the best end-to-end delay is provided by the blue path (1 -> 2 -> 3 -> 7). The chosen path is then encoded with Adj-SIDs corresponding to the traversed interfaces to avoid any ECMP, and therefore guarantee the latency over the path.

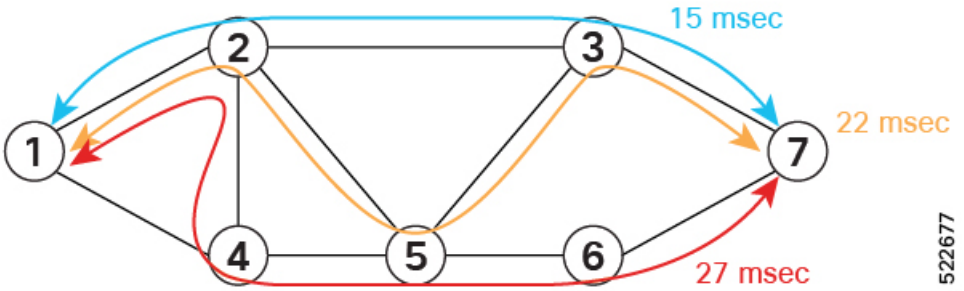

- **Control-Plane Independent Persistency**

  Adjacency SIDs can provide a persistent path independent from control-plane changes (such as IGP neighbor flaps), as well as network events (such as interface additions or interface flaps) and even the presence of IP on an interface. To achieve this, adjacency SIDs can be manually allocated to ensure persistent values, for example after a node reload event. In addition, adjacency SIDs can be programmed as non-protected to avoid any local TI-LFA protection.

  With the Adj-SIDs depicted in the figure below, the path from node 1 to node 7 is encoded with the segment list of {24000, 24001, 24000}. By manually allocating the same Adj-SID values for other direction, the path from node 7 to node 1 is encoded with the same segment list of {24000, 24001, 24000}.

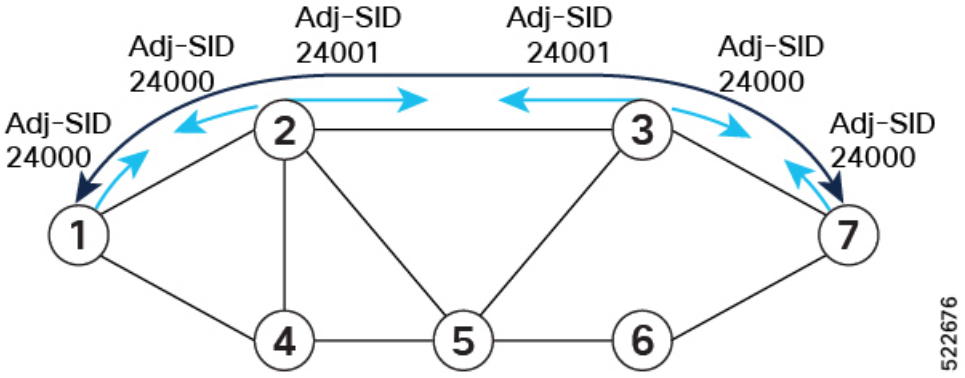


- **Co-Routed Bidirectional Path**

  Forward and return SR Policies with congruent paths are routed along the same nodes/interfaces.

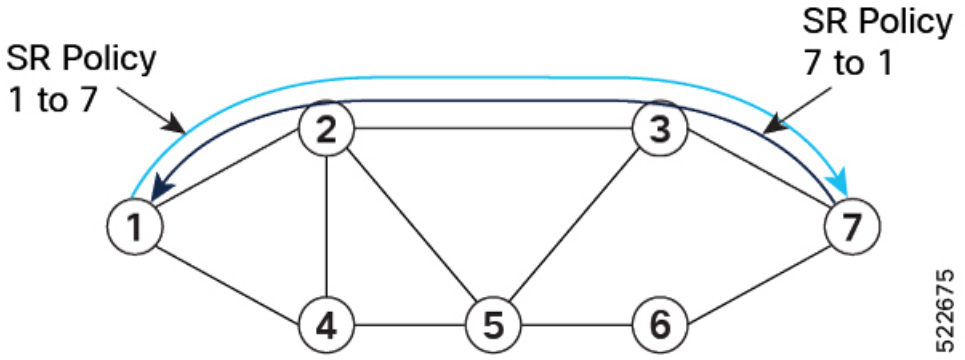


- **Liveness Monitoring with Path Protection Switching**

  Bi-directional liveness monitoring on the working and protect paths ensures fast and consistent switchover, while a protect path is pre-programmed over disjoint facilities.

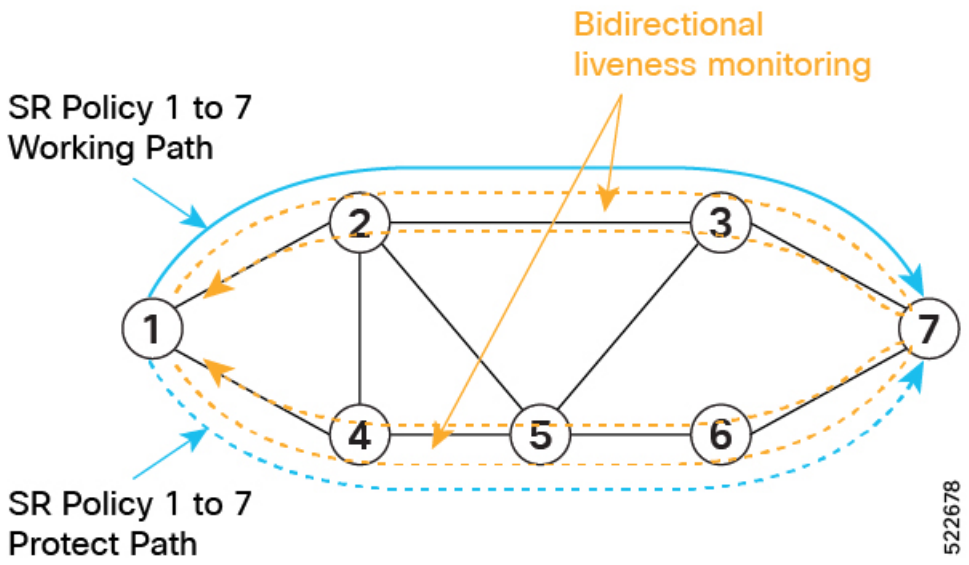


- **Guaranteed Bandwidth**

  Most services carried over the CS-SR policy are constant-rate traffic streams. Any packet loss due to temporary congestion leads to bit errors at the service layer. Therefore, bandwidth must be managed very tightly and guaranteed to the services mapped to CS-SR policies.

  A centralized controller manages the bandwidth reservation. The controller maintains the reserved bandwidth on each link based on the traffic usage:

  - Monitors amount of traffic forwarded to each CS-SR policy in the network
  - Uses knowledge of the active path used by the policy
  - Computes the per-link reservable bandwidth accordingly

  A per-hop behavior (as documented in RFC3246 [Expedited Forwarding] or RFC2597 [Assured Forwarding]) ensures that the specified bandwidth is available to CS-SR policies at all times independent of any other traffic.

  Bandwidth is reserved on both the working and protect paths.

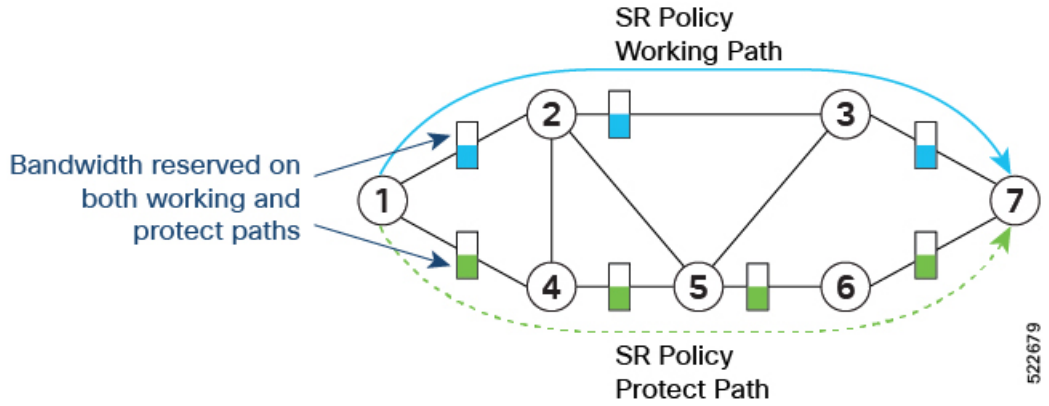

In addition, you can allocate one MPLS-EXP value for traffic steered over the CS SR-TE polices and use QoS (interface queueing) configuration to isolate the circuit traffic from the rest:

- QoS on headend nodes:
  - Define EXP value associated with CS services
  - Enforce rate limiting and perform EXP marking on service ingress interfaces
- QoS on transit nodes:
  - Classify incoming packets based on EXP value associated with CS services.
  - Enforce guaranteed bandwidth for the classified traffic on egress interfaces using bandwidth queues or priority queue with shaper.

Refer to Configuring Modular QoS Service Packet Classification chapter in the *Modular QoS Configuration Guide for Cisco ASR 9000 Series Routers*.

### Components of the Circuit-Style Solution

CS-SR policy paths are computed and maintained by a stateful PCE. The stateful PCE has a centralized view of the network that it can leverage to compute the co-routed bidirectional end-to-end paths and perform bandwidth allocation control, as well as monitor capabilities to ensure SLA compliance for the life of the CS-SR Policy.

- Centralized Controller
  - Computes the path
  - Encodes the path in a list of Adj-SIDs
  - Monitors and controls bandwidth for SLA guarantee
- QoS configuration on every link to isolate guaranteed traffic

### Usage Guidelines and Limitations

Observe the following guidelines and limitations:

- The maximum SID depth (MSD) is 10.
- CS SR policy end-point IP address must be the router-ID of the intended node.
- SR policy path protection is required for both directions.
- SR policy with dynamic path bandwidth constraint is required for both directions and must have the same value for both directions.
- Candidate path (CP) behavior:
  - The working path is associated with the candidate path of the highest preference value.
  - The protect path is associated with the candidate path of the second-highest preference value.

    - The restore path is associated with the candidate path of the third-highest preference value and is configured as "backup ineligible".
    - Candidate paths with the same role in both directions (working, protect, restore) must have the same preference value.

- Bi-directional path behavior:
    - All paths must be configured as co-routed.
    - All paths with the same role in both directions (working, protect, restore) must have the same bi-directional association ID value.
    - The bi-directional association ID value must be globally unique.

- Disjointness constraint:
    - The working and protect paths under the CS SR policy must be configured with a disjointness constraint using the same disjoint association ID and disjointness type.
        - The disjointness association ID for a working and protect path pair in one direction must be globally unique from the corresponding working and protect path pair in the opposite direction.
    - Node and link disjoint constraint types are supported.
    - The disjoint type used in both directions must be the same.
    - The restore path must not be configured with a disjointness constraint.

- Path optimization objectives supported are TE, IGP, and latency.
- The path optimization objective must match across working, protect, and restore paths in both directions.
- Segment type constraint:
    - Working, protect, and restore paths must all be configured with unprotected-only segment type constraint.
    - Working, protect, and restore paths must all be configured with Adj-SID-only segment type constraint.
    - To ensure persistency throughout link failure events, manual adjacency SIDs allocated from the SRLB range should be created on all interfaces used by CS policies.

- Revert/recovery behavior:
    - When both working and protect paths are down, the restore path becomes active.
    - The restore path remains active until the working or protect path recovers (partial recovery) and the lock duration timer expires.
    - The lock duration timer is configured under the protect and restore CPs.

- The following functionalities are not supported:
    - Affinity constraint
    - Flex-Algo constraint

- Metric-bounds constraint
- SR-TE Path Invalidation Drop

### Configure Performance Measurement Liveness Profiles

Performance Measurement (PM) provides proper detection of candidate path liveness and effective path protection. See SR Policy Liveness Monitoring, on page 505.

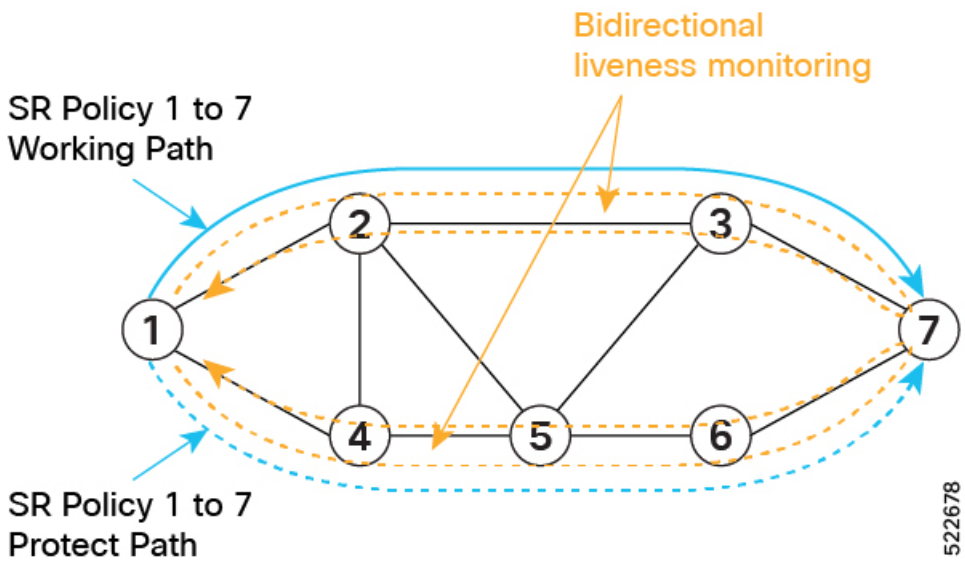


The following example shows how to create a liveness profile for the working and protect paths.

```
Router_1(config)# performance-measurement
Router_1(config-perf-meas)# liveness-profile name profile-WORKING
Router_1(config-pm-ld-profile)# liveness-detection
Router_1(config-pm-ld-profile-ld)# multiplier 3
Router_1(config-pm-ld-profile-ld)# exit
Router_1(config-pm-ld-profile)# probe
Router_1(config-pm-ld-probe)# tx-interval 30000
Router_1(config-pm-ld-probe)# exit
Router_1(config-pm-ld-profile)# exit
Router_1(config-perf-meas)# liveness-profile name profile-PROTECT
Router_1(config-pm-ld-profile)# liveness-detection
Router_1(config-pm-ld-profile-ld)# multiplier 3
Router_1(config-pm-ld-profile-ld)# exit
Router_1(config-pm-ld-profile)# probe
Router_1(config-pm-ld-probe)# tx-interval 100000
```

### Configuring CS SR-TE Policy

The following example shows how to configure a circuit-style SR policy from node 1 to node 7 with three candidate paths: working, protect, and restore.

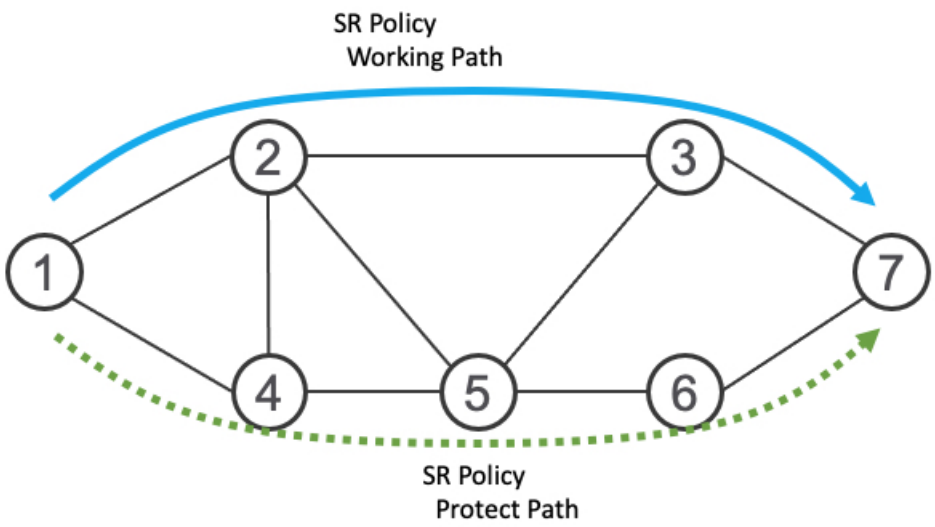


### Create the SR-TE Policy

Configure the CS SR-TE policy.

Use the **bandwidth** *bandwidth* command in SR-TE policy configuration mode to configure the guaranteed reservable bandwidth for the policy. The range for *bandwidth* is from 1 to 4294967295 in kbps.

Use the **path-protection** command in SR-TE policy configuration mode to enable end-to-end path protection.

```
Router_1(config)# segment-routing
Router_1(config-sr)# traffic-eng
Router_1(config-sr-te)# policy cs-srte-to-node7
Router_1(config-sr-te-policy)# bandwidth 10000
Router_1(config-sr-te-policy)# color 10 end-point ipv4 10.1.1.7
Router_1(config-sr-te-policy)# path-protection
Router_1(config-sr-te-path-pref-protection)# exit
Router_1(config-sr-te-policy)#
```

### Enable Liveness Monitoring Under SR Policy

The following example shows how to enable liveness monitoring under SR Policy and associate the working and protect (backup) liveness-profiles.

```
Router_1(config)# segment-routing
Router_1(config-sr)# traffic-eng
Router_1(config-sr-te)# policy cs-srte-to-node7
Router_1(config-sr-te-policy)# performance-measurement
Router_1(config-sr-te-policy-perf-meas)# liveness-detection
Router_1(config-sr-te-policy-live-detect)# liveness-profile name profile-WORKING
Router_1(config-sr-te-policy-live-detect)# liveness-profile backup name profile-PROTECT
Router_1(config-sr-te-policy-live-detect)# exit
Router_1(config-sr-te-policy-perf-meas)# exit
Router_1(config-sr-te-policy)#
```

### Configure the Working Candidate Path

The working CP has the following characteristics:

- The working path is associated with the candidate path of the highest preference.
- The working CP uses unprotected-only Adj-SIDs in the segment list.
- The working CP is bidirectional and co-routed.
- The working CP in both directions must have the same bi-directional association ID value.
- The disjoint path constraint for the working CP must have the same group ID and disjoint type as the protect CP.

```
Router_1(config)# segment-routing
Router_1(config-sr)# traffic-eng
Router_1(config-sr-te)# policy cs-srte-to-node7
Router_1(config-sr-te-policy)# candidate-paths
Router_1(config-sr-te-policy-path)# preference 100
Router_1(config-sr-te-policy-path-pref)# dynamic
Router_1(config-sr-te-pp-info)# pcep
Router_1(config-sr-te-path-pcep)# exit
Router_1(config-sr-te-pp-info)# metric
Router_1(config-sr-te-path-metric)# type te
Router_1(config-sr-te-path-metric)# exit
Router_1(config-sr-te-pp-info)# exit
Router_1(config-sr-te-policy-path-pref)# constraints
Router_1(config-sr-te-path-pref-const)# segments
Router_1(config-sr-te-path-pref-const-seg)# protection unprotected-only
Router_1(config-sr-te-path-pref-const-seg)# adjacency-sid-only
Router_1(config-sr-te-path-pref-const-seg)# exit
Router_1(config-sr-te-path-pref-const)# disjoint-path group-id 3 type node
Router_1(config-sr-te-path-pref-const)# exit
Router_1(config-sr-te-policy-path-pref)# bidirectional
Router_1(config-sr-te-path-pref-bidir)# co-routed
Router_1(config-sr-te-path-pref-bidir)# association-id 1100
Router_1(config-sr-te-path-pref-bidir)# exit
Router_1(config-sr-te-policy-path-pref)# exit
Router_1(config-sr-te-policy-path)#
```

### Configure the Protect Candidate Path

The protect CP has the following characteristics:

- The protect path is associated with the candidate path of the second-highest preference.
- The protect CP uses unprotected-only Adj-SIDs in the segment list.
- The protect CP is bidirectional and co-routed.
- The protect CP in both directions must have the same bi-directional association ID value.
- The disjoint path constraint for the protect CP must have the same group ID and disjoint type as the working CP.
- When the working path is invalid, the protect path becomes active. After the working path has recovered, the protect path remains active until the default lock duration (300 seconds) expires. You can configure a different lock duration using the **lock duration** *duration* command. The *duration* range is 0 (disabled) to 3000 seconds. If the lock duration is 0 (disabled), then the working path becomes active as soon as it recovers. If *duration* is not specified, the protect path remains active.

```
Router_1(config-sr-te-policy-path)# preference 50
Router_1(config-sr-te-policy-path-pref)# dynamic
Router_1(config-sr-te-pp-info)# pcep
Router_1(config-sr-te-path-pcep)# exit
Router_1(config-sr-te-pp-info)# metric
Router_1(config-sr-te-path-metric)# type te
Router_1(config-sr-te-path-metric)# exit
Router_1(config-sr-te-pp-info)# exit
Router_1(config-sr-te-policy-path-pref)# lock duration 30
Router_1(config-sr-te-policy-path-pref)# constraints
Router_1(config-sr-te-path-pref-const)# segments
Router_1(config-sr-te-path-pref-const-seg)# protection unprotected-only
Router_1(config-sr-te-path-pref-const-seg)# adjacency-sid-only
Router_1(config-sr-te-path-pref-const-seg)# exit
Router_1(config-sr-te-path-pref-const)# disjoint-path group-id 3 type node
Router_1(config-sr-te-path-pref-const)# exit
Router_1(config-sr-te-policy-path-pref)# bidirectional
Router_1(config-sr-te-path-pref-bidir)# co-routed
Router_1(config-sr-te-path-pref-bidir)# association-id 1050
Router_1(config-sr-te-path-pref-bidir)# exit
Router_1(config-sr-te-policy-path-pref)# exit
Router_1(config-sr-te-policy-path)#
```

### Configure the Restore Candidate Path

The restore CP has the following characteristics:

- The restore path is associated with the candidate path of the the third-highest preference.
- The restore CP uses unprotected-only Adj-SIDs in the segment list.
- The restore CP is bidirectional and co-routed.
- The restore CP in both directions must have the same bidirectional association ID value.
- The restore CP must be configured with **backup-ineligible**. This configuration prevents the restore CP from being used as a fast reroute backup. The restore path is not computed until both working and protect paths become unavailable.
- Disjointness constraint is not configured on the restore CP.
- If both working and protect paths are unavailable, the restore path becomes active. After either the working or protect path has recovered, the restore path remains active until the default lock duration (300 seconds) expires. You can configure a different lock duration using the **lock duration** *duration* command. The *duration* range is 0 (disabled) to 3000 seconds. If the lock duration is 0 (disabled), then the working or protect path becomes active as soon as either recovers. If *duration* is not specified, the restore path remains active.

```
Router_1(config-sr-te-policy-path)# preference 10
Router_1(config-sr-te-policy-path-pref)# dynamic
Router_1(config-sr-te-pp-info)# pcep
Router_1(config-sr-te-path-pcep)# exit
Router_1(config-sr-te-pp-info)# metric
Router_1(config-sr-te-path-metric)# type te
Router_1(config-sr-te-path-metric)# exit
Router_1(config-sr-te-pp-info)# exit
Router_1(config-sr-te-policy-path-pref)# backup-ineligible
Router_1(config-sr-te-policy-path-pref)# lock duration 30
```

```
Router_1(config-sr-te-policy-path-pref)# constraints
Router_1(config-sr-te-path-pref-const)# segments
Router_1(config-sr-te-path-pref-const-seg)# protection unprotected-only
Router_1(config-sr-te-path-pref-const-seg)# adjacency-sid-only
Router_1(config-sr-te-path-pref-const-seg)# exit
Router_1(config-sr-te-path-pref-const)# exit
Router_1(config-sr-te-policy-path-pref)# bidirectional
Router_1(config-sr-te-path-pref-bidir)# co-routed
Router_1(config-sr-te-path-pref-bidir)# association-id 1010
Router_1(config-sr-te-path-pref-bidir)# exit
Router_1(config-sr-te-policy-path-pref)# exit
Router_1(config-sr-te-policy-path)#
```

### Running Configuration

```
Router_1# show running-config

. . .
segment-routing
 traffic-eng
  policy cs-srte-to-node7
   bandwidth 10000
   color 10 end-point ipv4 10.1.1.7
   path-protection
   !
   candidate-paths
    preference 10
     dynamic
      pcep
      !
      metric
       type te
      !
     !
     lock
      duration 30
     !
     backup-ineligible
     !
     constraints
      segments
       protection unprotected-only
       adjacency-sid-only
      !
     !
     bidirectional
      co-routed
      association-id 1010
     !
    !
    preference 50
     dynamic
      pcep
      !
      metric
       type te
      !
     !
     lock
      duration 30
     !
     constraints
```

```
      segments
       protection unprotected-only
       adjacency-sid-only
      !
      disjoint-path group-id 3 type node
     !
     bidirectional
      co-routed
      association-id 1050
     !
    !
    preference 100
     dynamic
      pcep
      !
      metric
       type te
      !
     !
     constraints
      segments
       protection unprotected-only
       adjacency-sid-only
      !
      disjoint-path group-id 3 type node
     !
     bidirectional
      co-routed
      association-id 1100
     !
    !
   !
   performance-measurement
    liveness-detection
     liveness-profile backup name profile-PROTECT
     liveness-profile name profile-WORKING
     invalidation-action down
    !
   !
  !
 !
!
root
performance-measurement
 liveness-profile name profile-PROTECT
  liveness-detection
   multiplier 3
  !
  probe
   tx-interval 100000
  !
 !
 liveness-profile name profile-WORKING
  liveness-detection
   multiplier 3
  !
  probe
   tx-interval 30000
  !
 !
!
```

### Verification

Use the **show segment-routing traffic-eng policy detail** command to display the details of the CS SR policy on node 1:

```
Router_1# show segment-routing traffic-eng policy detail

SR-TE policy database
---------------------

Color: 10, End-point: 10.1.1.7
  Name: srte_c_10_ep_10.1.1.7
  Status:
    Admin: up  Operational: up for 00:02:24 (since Nov 30 08:03:36.588)
  Candidate-paths:
    Preference: 100 (configuration) (active)
      Name: cs-srte-to-node7
      Requested BSID: 8000
      PCC info:
        Symbolic name: cfg_cs-srte-to-node7_discr_100
        PLSP-ID: 2
      Constraints:
        Protection Type: unprotected-only
        Maximum SID Depth: 10
        Adjacency SIDs Only: True
      Performance-measurement:
        Reverse-path Label: Not Configured
        Delay-measurement: Disabled
        Liveness-detection: Enabled
          Profile: profile-WORKING
          Invalidation Action: down
          Logging:
            Session State Change: No
        Statistics:
          Session Create    : 1
          Session Update    : 12
          Session Delete    : 4
          Session Up        : 8
          Session Down      : 3
          Delay Notification: 0
          Session Error     : 0
      Dynamic (pce 192.168.0.5) (valid)
        Metric Type: TE,   Path Accumulated Metric: 10
          SID[0]: 24001 [Adjacency-SID, 10.10.10.1 - 10.10.10.2]
        Reverse path:
          SID[0]: 24000 [Adjacency-SID, 10.10.10.2 - 10.10.10.1]
      Protection Information:
        Role: WORKING
        Path Lock: Timed
        Lock Duration: 300(s)
    Preference: 50 (configuration) (protect)
      Name: cs-srte-to-node7
      Requested BSID: 8000
      PCC info:
        Symbolic name: cfg_cs-srte-to-node7_discr_50
        PLSP-ID: 1
      Constraints:
        Protection Type: unprotected-only
        Maximum SID Depth: 10
        Adjacency SIDs Only: True
      Performance-measurement:
        Reverse-path Label: Not Configured
        Delay-measurement: Disabled
        Liveness-detection: Enabled
```

```
          Profile: profile-PROTECT
          Invalidation Action: down
          Logging:
            Session State Change: No
        Statistics:
          Session Create    : 0
          Session Update    : 9
          Session Delete    : 0
          Session Up        : 1
          Session Down      : 0
          Delay Notification: 0
          Session Error     : 0
      Dynamic (pce 192.168.0.5) (valid)
        Metric Type: TE,   Path Accumulated Metric: 10
          SID[0]: 24002 [Adjacency-SID, 11.11.11.1 - 11.11.11.2]
        Reverse path:
          SID[0]: 24003 [Adjacency-SID, 11.11.11.2 - 11.11.11.1]
      Protection Information:
        Role: PROTECT
        Path Lock: Timed
        Lock Duration: 30(s)
    Preference: 10 (configuration) (inactive)
      Name: cs-srte-to-node7
      Requested BSID: 8000
      Constraints:
        Protection Type: unprotected-only
        Maximum SID Depth: 10
        Adjacency SIDs Only: True
      Performance-measurement:
        Reverse-path Label: Not Configured
        Delay-measurement: Disabled
        Liveness-detection: Enabled
          Profile: working
          Invalidation Action: down
          Logging:
            Session State Change: No
        Statistics:
          Session Create    : 0
          Session Update    : 0
          Session Delete    : 0
          Session Up        : 0
          Session Down      : 0
          Delay Notification: 0
          Session Error     : 0
      Dynamic (pce) (inactive)
        Metric Type: TE,   Path Accumulated Metric: 0
      Protection Information:
        Role: RESTORE
        Path Lock: Timed
        Lock Duration: 30(s)
  LSPs:
    LSP[0]:
      LSP-ID: 3 policy ID: 1 (standby)
      Local label: 24037
      State: Standby programmed state
      Performance-measurement:
        Reverse-path Label: Not Configured
        Delay-measurement: Disabled
        Liveness-detection: Enabled
          Profile: profile-WORKING
          Invalidation Action: down
          Logging:
            Session State Change: No
          Session State: up, for 1d12h (since Nov 30 08:03:37.859)
```

```
  LSP[1]:
    LSP-ID: 7 policy ID: 1 (active)
    Local label: 24036
    State: Programmed
    Binding SID: 8000
    Performance-measurement:
      Reverse-path Label: Not Configured
      Delay-measurement: Disabled
      Liveness-detection: Enabled
        Profile: profile-WORKING
        Invalidation Action: down
        Logging:
          Session State Change: No
        Session State: up, for 05:42:36 (since Dec  1 15:11:36.203)
Attributes:
  Binding SID: 8000
  Forward Class: Not Configured
  Steering labeled-services disabled: no
  Steering BGP disabled: no
  IPv6 caps enable: yes
  Bandwidth Requested: 10000 kbps
  Bandwidth Current: 10000 kbps
  Invalidation drop enabled: no
  Max Install Standby Candidate Paths: 0
```

# SR-TE Policy Path Protection

*Table 45: Feature History Table*

| Feature Name | Release Information | Feature Description |
|---|---|---|
| SR-TE Policy Path Protection | Release 7.4.2 | You can now configure pre-programmed SR-TE policy Working and Protect candidate paths, and provide fast failure detection through SR Policy Liveness Monitoring probes. If there is a liveness failure on the Working candidate path, the headend triggers a switchover to the Protect candidate path.<br><br>With this release, you can operate IP-centric (with ECMP and TI-LFA) and TDM-centric (with circuits and path protection) services over a common SR network. This eliminates the need for multiple parallel networks and reduces capital expenditures (CapEx) and operating expenditures (OpEx).<br><br>For this feature, the following commands/keywords are added:<br>• **policy candidate-paths preference lock duration**<br>• **policy path-protection**<br>• **backup** keyword is added to the **performance-measurement liveness-detection** command. |

To provide SR policy path protection, headend router and liveness monitoring functions are introduced. The functions are explained with the *1:1* (*one-to-one*) *path protection with SR policy liveness monitoring* use case for TDM-centric networks. Pointers:

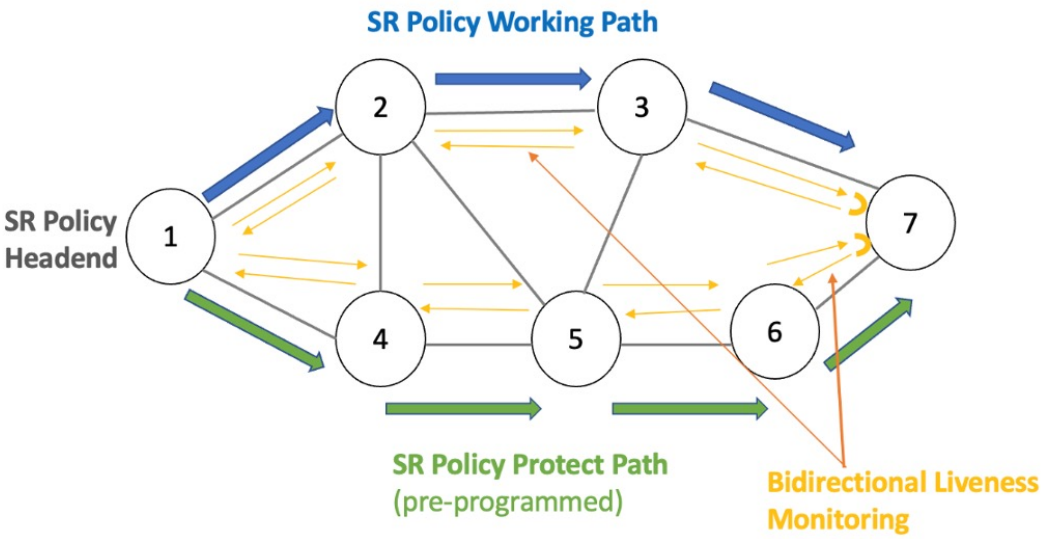


**Note** Path protection and local TI-LFA FRR are mutually exclusive functions.

- An SR-TE policy is enabled on the headend router. The headend router 1 sends traffic to endpoint router 7. The Working candidate path **Blue** spans routers 1-2-3-7, and the Protect candidate path **Green** spans routers 1-4-5-6-7.
- The headend Router maintains an independent liveness session on each candidate path using loopback measurement mode. After verifying liveness, it pre-programs Working and Protect paths in forwarding.
- The paths are manually configured in explicit segment lists using MPLS labels to ensure that unprotected adjacency SIDs are utilized.
- The headend router sends traffic over the Working candidate path, and detects any liveness failure. When there is a failure, it sends direct switchover notifications to the FIB, and triggers a switchover to the protected path.
- In 1:1 (***one-to-one***) path protection, when the Working candidate path fails, the Protect candidate path sends traffic.

**Note** SR-TE policy path protection and SR-TE path invalidation drop inter-working is not supported.

### Liveness Monitoring

- SR PM Liveness probes are performed over Working and Protect candidate paths.
- TWAMP Light (RFC 5357) is used for performance measurement and liveness monitoring.
- Separate PM liveness monitoring sessions are created for working and protect candidate-paths.
- Independent PM sessions are created at both endpoints of the SR Policy.

- Loopback measurement-mode (timestamps t1/t4) is used for liveness monitoring. Probe packets are not punted on the responder node. Round-trip delay is computed as (t4 – t1).
- From headend router 1, PM probe query packets are sent with forward and reverse (7->3->2->1) direction paths of the SR Policy's candidate-path in the header of the probe packet. Similarly, PM probe query packets are sent along the Protect path.
- For liveness monitoring:
  - Liveness is declared UP as soon as one probe packet is received back on all segment-lists of the candidate-path.
  - Liveness failure is detected when last N (user-configured value) consecutive probe packets are lost on any segment-list.
  - Fault in the forward and reverse direction of the segment-list (co-routed path) triggers liveness failure notification to SRTE and FIB. FIB triggers protection switchover upon PM notification (running on high priority thread).

### Configuration

- In this example, an SR-TE policy **foo** is created on the headend router and path-protection is enabled for the policy.

```
RP/0/RSP0/CPU0:ios# configure
RP/0/RSP0/CPU0:ios(config)# segment-routing traffic-eng policy foo
RP/0/RSP0/CPU0:ios(config-sr-te-policy)# color 10 end-point ipv4 192.168.0.3
RP/0/RSP0/CPU0:ios(config-sr-te-policy)# path-protection
RP/0/RSP0/CPU0:ios(config-sr-te-path-pref-protection)#exit
```

- Under **candidate-paths**, the Protect and Working paths are specified through explicit segment lists.
- The Protect path's preference is 50, and it is lower than the Working path preference of 100. The forward (1->4->5->6->7) and reverse (7->6->5->4->1) Protect paths, and the forward (1->2->3->7) and reverse (7->3->2->1) Working paths are enabled as explicit segment lists.
- When the Working path is invalid, the Protect path becomes active. After the Working path has recovered, the Protect path remains active until the default lock duration (of 300 seconds) expires. You can configure a different lock duration using the **lock duration** command.

  The duration range is 0 (disabled) to 3000 seconds. If the lock duration is 0 (disabled), then the Working path becomes active as soon as it recovers. If the duration is not specified, the Protect path remains active.

```
RP/0/RSP0/CPU0:ios(config-sr-te-policy)# candidate-paths
RP/0/RSP0/CPU0:ios(config-sr-te-policy-path)#preference 50
RP/0/RSP0/CPU0:ios(config-sr-te-policy-path-pref)#lock duration 30
RP/0/RSP0/CPU0:ios(config-sr-te-policy-path-pref)# explicit segment-list sl-protect-fwd
```

Type **Exit** three times to go to the SR-TE policy configuration mode.

```
RP/0/RSP0/CPU0:ios(config-sr-te-policy)#candidate-paths
RP/0/RSP0/CPU0:ios(config-sr-te-policy-path)#preference 100
RP/0/RSP0/CPU0:ios(config-sr-te-policy-path-pref)# explicit segment-list sl-working-fwd
RP/0/RSP0/CPU0:ios(config-sr-te-pp-info)# commit
```

#### Working and Protect Segment Lists Configuration

Configure explicit segment lists for the candidate paths.

**Note** Segment lists must use only unprotected (dynamic or manual) Adjacency SID and BSIDs (as non-first-SID).

```
RP/0/RSP0/CPU0:ios# configure
RP/0/RSP0/CPU0:ios(config)# segment-routing traffic-eng
RP/0/RSP0/CPU0:ios(config-sr-te)# segment-list sl-working-fwd
RP/0/RSP0/CPU0:ios(config-sr-te-sl)# index 1 mpls label 24000
RP/0/RSP0/CPU0:ios(config-sr-te-sl)# index 2 mpls label 24004
RP/0/RSP0/CPU0:ios(config-sr-te-sl)# exit
RP/0/RSP0/CPU0:ios(config-sr-te)# segment-list sl-working-bck
RP/0/RSP0/CPU0:ios(config-sr-te-sl)# index 1 mpls label 24002
RP/0/RSP0/CPU0:ios(config-sr-te-sl)# index 2 mpls label 24006
RP/0/RSP0/CPU0:ios(config-sr-te-sl)# exit
RP/0/RSP0/CPU0:ios(config-sr-te)# segment-list sl-protect-fwd
RP/0/RSP0/CPU0:ios(config-sr-te-sl)# index 1 mpls label 24000
RP/0/RSP0/CPU0:ios(config-sr-te-sl)# index 2 mpls label 30201
RP/0/RSP0/CPU0:ios(config-sr-te-sl)# exit
RP/0/RSP0/CPU0:ios(config-sr-te)# segment-list sl-protect-bck
RP/0/RSP0/CPU0:ios(config-sr-te-sl)# index 1 mpls label 24002
RP/0/RSP0/CPU0:ios(config-sr-te-sl)# index 2 mpls label 30201
RP/0/RSP0/CPU0:ios(config-sr-te-sl)# commit
```

### Performance Measurement Configuration For SR-TE Policy

- Enable SR-TE policy specific performance measurement configurations.
- Create a liveness profile for the Working and Protect paths.

```
RP/0/RSP0/CPU0:ios# configure
RP/0/RSP0/CPU0:ios(config)# segment-routing traffic-eng policy foo
RP/0/RSP0/CPU0:ios(config-sr-te-policy)#performance-measurement
RP/0/RSP0/CPU0:ios(config-sr-te-policy-perf-meas)#liveness-detection
RP/0/RSP0/CPU0:ios(config-sr-te-policy-live-detect)# liveness-profile backup name
profile-PROTECT
RP/0/RSP0/CPU0:ios(config-sr-te-policy-live-detect)# liveness-profile name profile-WORKING
```

- The default Invalidation action is Down and it triggers path protection switching. The other action is None, which is enabled here.

```
RP/0/RSP0/CPU0:ios(config-sr-te-policy-live-detect)#invalidation-action none
RP/0/RSP0/CPU0:ios(config-sr-te-policy-live-detect)#commit
```

### Performance Measurement Global Profile Configuration

- Create a Working candidate path liveness profile.

```
RP/0/RSP0/CPU0:ios(config)#performance-measurement
RP/0/RSP0/CPU0:ios(config-perf-meas)#liveness-profile sr-policy name profile-WORKING
RP/0/RSP0/CPU0:ios(config-pm-ld-srpolicy)# probe
RP/0/RSP0/CPU0:ios(config-pm-ld-srpolicy-probe)# tx-interval 30000
RP/0/RSP0/CPU0:ios(config-pm-ld-srpolicy-probe)# commit
RP/0/RSP0/CPU0:ios(config-pm-ld-srpolicy-probe)# exit
RP/0/RSP0/CPU0:ios(config-pm-ld-srpolicy)# liveness-detection multiplier 4
RP/0/RSP0/CPU0:ios(config-pm-ld-srpolicy)# commit
```

Type **Exit** to access the Performance Measurement config mode.

- Create a Protect candidate path liveness profile.

```
RP/0/RSP0/CPU0:ios(config-perf-meas)# liveness-profile sr-policy name profile-PROTECT
RP/0/RSP0/CPU0:ios(config-pm-ld-srpolicy)# probe
RP/0/RSP0/CPU0:ios(config-pm-ld-srpolicy-probe)# tx-interval 100000
RP/0/RSP0/CPU0:ios(config-pm-ld-srpolicy-probe)# commit
RP/0/RSP0/CPU0:ios(config-pm-ld-srpolicy-probe)# exit
RP/0/RSP0/CPU0:ios(config-pm-ld-srpolicy)# liveness-detection multiplier 3
RP/0/RSP0/CPU0:ios(config-pm-ld-srpolicy)# commit
```

### Verification

Use the **show segment-routing traffic-eng policy candidate-path** command to display Working and Protect candidate-path details.

```
RP/0/RSP0/CPU0:ios# show segment-routing traffic-eng policy candidate-path name foo

SR-TE policy database
---------------------

Color: 10, End-point: 192.168.0.3s
  Name: srte_c_10_ep_192.168.0.3
  Status:
    Admin: up  Operational: Up for 00:11:55 (since Dec 15 07:02:08.709)
  Candidate-paths:
    Preference: 100 (configuration) (active)
      Name: foo
      Requested BSID: dynamic
        Protection Type: protected-preferred
        Maximum SID Depth: 10
      Explicit: segment-list sl-working-fwd (active)
        Weight: 1, Metric Type: TE
          24000
          24004
      Protection Information:
        Role: WORKING
        Path Lock: Timed
        Lock Duration: 300(s)
    Preference: 50 (configuration) (active)
      Name: foo
      Requested BSID: dynamic
        Protection Type: protected-preferred
        Maximum SID Depth: 10
      Explicit: segment-list sl-protect-fwd (active)
        Weight: 1, Metric Type: TE
          24000
          30201
      Protection Information:
        Role: PROTECT
        Path Lock: Timed
        Lock Duration: 30(s)
 ..
```

CHAPTER 12

# Segment Routing Tree Segment Identifier

Tree Segment Identifier (Tree-SID) is an SDN controller-based approach to build label switched multicast (LSM) Trees for efficient delivery of multicast traffic in an SR domain and without the need for multicast protocol running in the network. With Tree SID, trees are centrally computed and controlled by a path computation element (SR-PCE).

A Replication segment (as specified in IETF draft "SR Replication segment for Multi-point Service Delivery") is a type of segment which allows a node (Replication node) to replicate packets to a set of other nodes (Downstream nodes) in a Segment Routing Domain.

A Replication segment includes the following:

- Replication SID: The Segment Identifier of a Replication segment. This is an SR-MPLS label (Tree SID label).
- Downstream nodes: Set of nodes in Segment Routing domain to which a packet is replicated by the Replication segment.

A Point-to-Multipoint (P2MP) tree is formed by stitching Replication segments on the Root node, intermediate Replication nodes, and Leaf nodes. This is referred to as an SR P2MP Policy (as specified in IETF draft "Segment Routing Point-to-Multipoint Policy").

An SR P2MP policy works on existing MPLS data-plane and supports TE capabilities and single/multi routing domains. At each node of the tree, the forwarding state is represented by the same Replication segment (using a global Tree-SID specified from the SRLB range of labels).

An SR P2MP policy request contains the following:

- Policy name
- SID for the P2MP Tree (Tree-SID)
- Address of the root node
- Addresses of the leaf nodes
- Optimization objectives (TE, IGP, delay metric)
- Constraints (affinity)

The SR-PCE is responsible for the following:

1. Learning the network topology - *to be added*

2. Learning the Root and Leaves of a Tree - *describe dynamic and static Tree SIDs (16-17) - Tree SID Policy Types and Behaviors*
3. Computing the Tree
4. Allocating MPLS label for the Tree
5. Signaling Tree forwarding state to the routers
6. Re-optimizing Tree

### Tree SID Policy Types and Behaviors

- Static P2MP Policies—can be configured in the following ways:
  - Tree SID parameters provided via Cisco Crosswork Optimization Engine (COE) UI
    - COE passes the policy configuration to the SR-PCE via REST API (no Tree-SID CLI at PCE). This method allows for SR-PCE High Availability (HA).

**Note** Refer to the *Traffic Engineering in Crosswork Optimization Engine* chapter in the Cisco Crosswork Optimization Engine documentation.

  - Tree SID parameters configured via Tree-SID CLI at the SR-PCE

**Caution** With this method, SR-PCE HA is not supported. For this reason, this configuration method is not recommended.

- Dynamic P2MP Policies—can be configured in the following ways:
  - A BGP mVPN is configured in the network (PE nodes) – service configuration via CLI or Cisco NSO
    - As a result, BGP control plane is used for PE auto-discovery and customer multicast signaling.
  - Tree SID parameters are provided by mVPN PEs via PCEP to the PCE. This method allows for SR-PCE High Availability (HA).

### Tree SID Workflow Overview

This sections shows a basic workflow using a static Tree SID policy:

1. User creates a static Tree-SID policy, either via Crosswork Optimization Engine (preferred), or via CLI at the SR-PCE (not recommended).

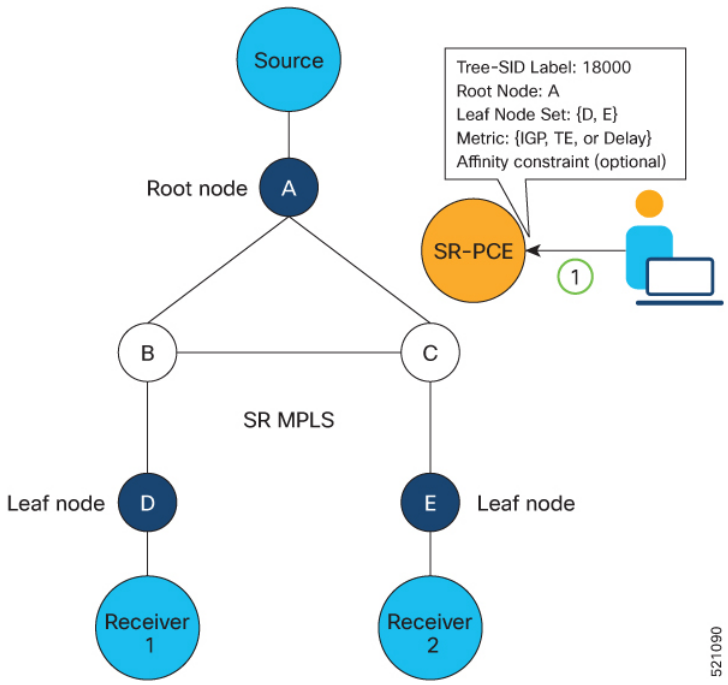


2. SR-PCE computes the P2MP Tree.

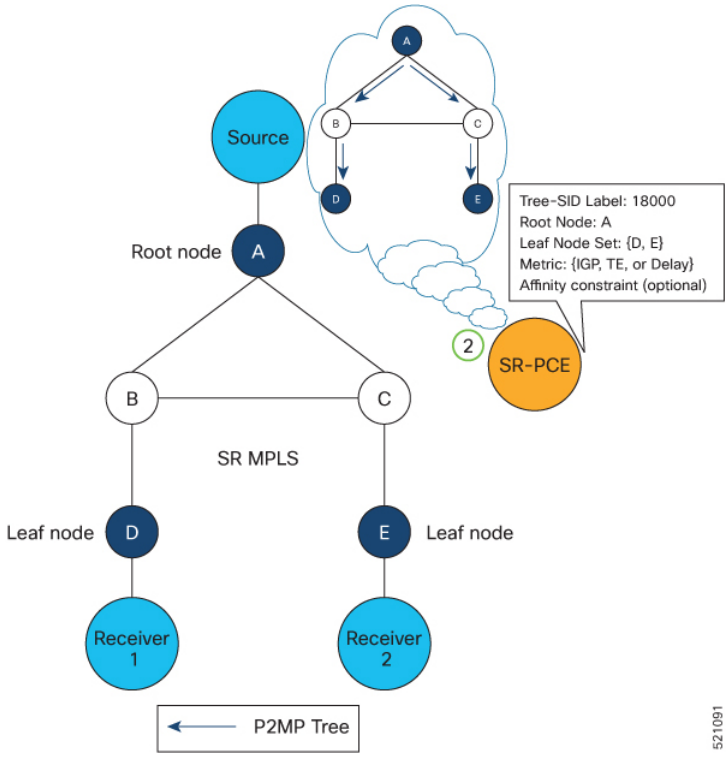


3. SR-PCE instantiates the Tree-SID state at each node in the tree.

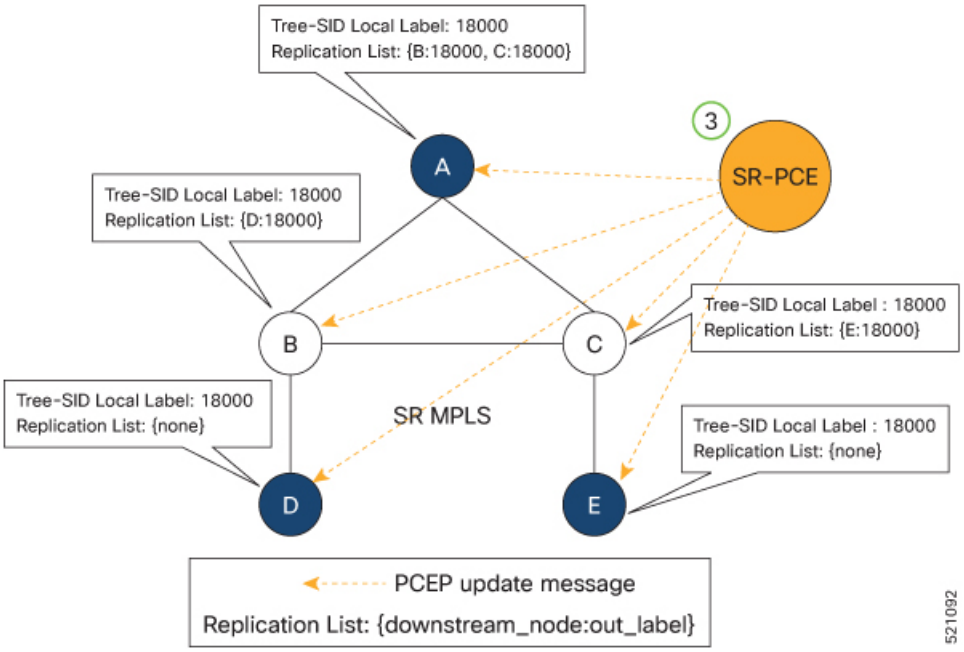


4. The Root node encapsulates the multicast traffic, replicates it, and forwards it to the Transit nodes.
5. The Transit nodes replicate the multicast traffic and forward it to the Leaf nodes.
6. The Leaf nodes decapsulate the multicast traffic and forward it to the multicast receivers.

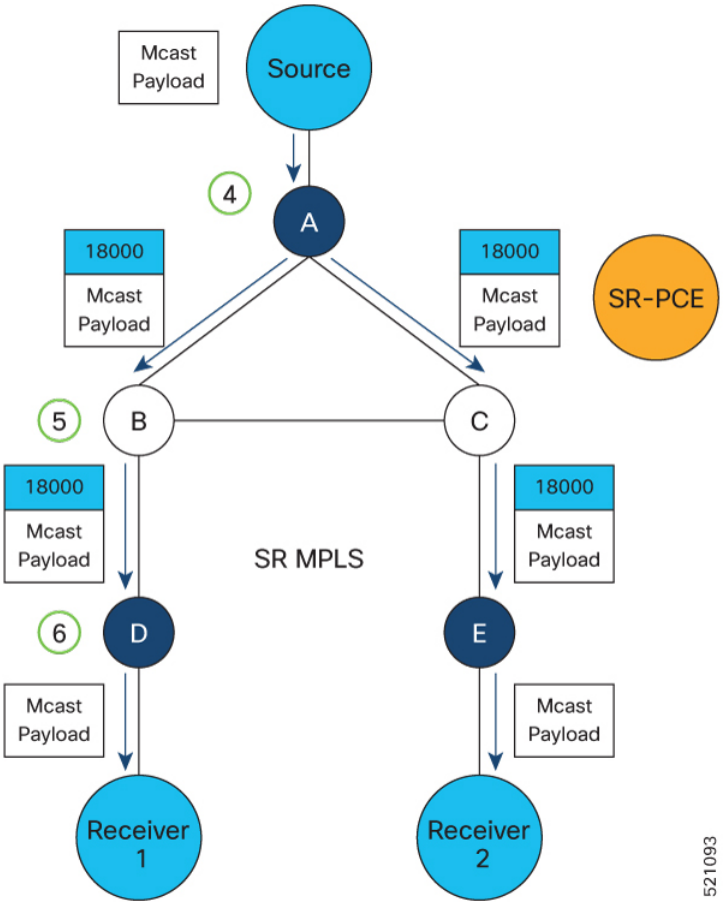



- Usage Guidelines and Limitations, on page 411
- Bud Node Support, on page 412
- Configure Static Segment Routing Tree-SID via CLI at SR-PCE, on page 412
- Running Config, on page 414
- Multicast VPN: Dynamic Tree-SID MVPN (with TI-LFA), on page 416
- Multicast: SR-PCE High Availability (HA) Support for Dynamic Tree-SID (mVPN), on page 431


# Usage Guidelines and Limitations

- SR-PCE High Availability (HA) is supported for dynamic P2MP policies and for static P2MP policies configured via Cisco Crosswork Optimization Engine (COE) UI.
- SR-PCE HA is not supported for static Tree-SID policy configured via Tree-SID CLI at the SR-PCE. Tree-SID can only be controlled by a single PCE. Configure only one PCE on each PCC in the Tree-SID path.

# Bud Node Support

In a multicast distribution tree, a Bud node is a node that acts as a leaf (egress) node as well as a mid-point (transit) node toward the downstream sub-tree.

In the below multicast distribution tree topology with Root node {A} and Leaf nodes set {B, C, D}, node D is a Bud node. Similarly, if node E is later added to the Leaf set, it would also become a Bud node.

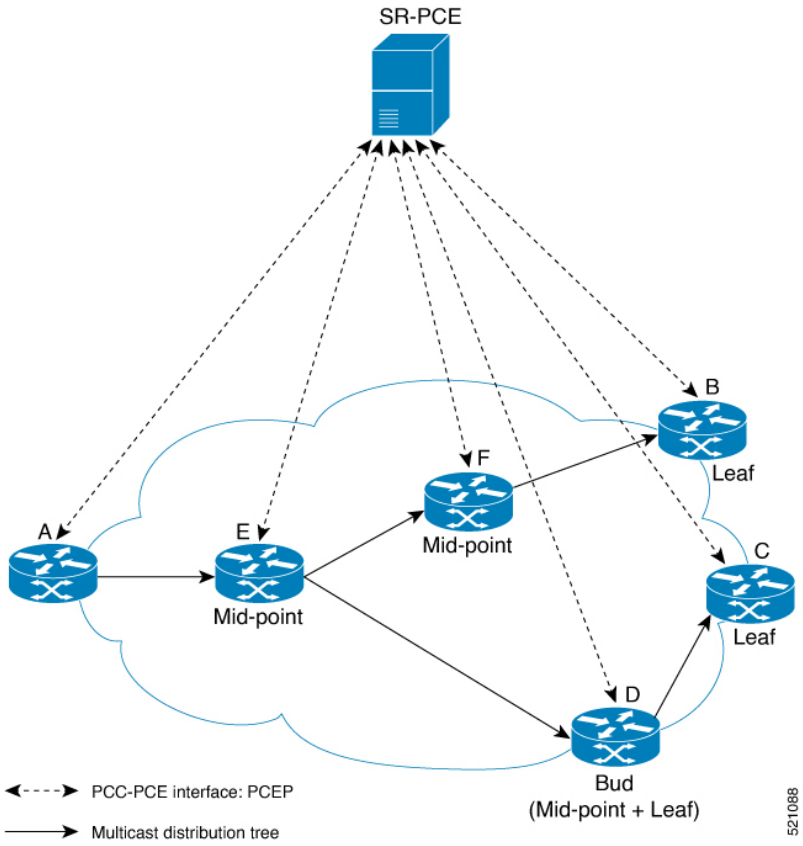


The tree computation algorithm on SR-PCE has been enhanced to detect a Bud node based on knowledge of the Leaf set, and to handle Leaf/Transit node transitions to Bud node. The role of the Bud node is also explicitly signaled in PCEP.

# Configure Static Segment Routing Tree-SID via CLI at SR-PCE

**Caution** With this configuration method, SR-PCE HA is not supported. For this reason, this configuration method is not recommended.

To configure static Segment Routing Tree-SID for Point-to-Multipoint (P2MP) SR policies, complete the following configurations:

1. Configure Path Computation Element Protocol (PCEP) Path Computation Client (PCC) on all nodes involved in the Tree-SID path (root, mid-point, leaf)
2. Configure Affinity Maps on the SR-PCE
3. Configure P2MP SR Policy on SR-PCE
4. Configure Multicast on the Root and Leaf Nodes

### Configure PCEP PCC on All Nodes in Tree-SID Path

Configure all nodes involved in the Tree-SID path (root, mid-point, leaf) as PCEP PCC. For detailed PCEP PCC configuration information, see Configure the Head-End Router as PCEP PCC, on page 334.

### Configure Affinity Maps on the SR-PCE

Use the **affinity bit-map** *COLOR bit-position* command in PCE SR-TE sub-mode to define affinity maps. The bit-position range is from 0 to 255.

```
Router# configure
Router(config)# pce
Router(config-pce)# segment-routing traffic-eng
Router(config-pce-sr-te)# affinity bit-map RED 23
Router(config-pce-sr-te)# affinity bit-map BLUE 24
Router(config-pce-sr-te)# affinity bit-map CROSS 25
Router(config-pce-sr-te)#
```

### Configure P2MP SR Policy on SR-PCE

Configure the end-point name and addresses, Tree-SID label, and constraints for the P2MP policy.

Use the **endpoint-set** *NAME* command in SR-PCE P2MP sub-mode to enter the name of the end-point set and to define the set of end-point addresses.

```
Router(config-pce-sr-te)# p2mp
Router(config-pce-sr-te-p2mp)# endpoint-set BAR
Router(config-pce-p2mp-ep-set)# ipv4 10.1.1.2
Router(config-pce-p2mp-ep-set)# ipv4 10.1.1.3
Router(config-pce-p2mp-ep-set)# ipv4 10.1.1.4
Router(config-pce-p2mp-ep-set)# exit
Router(config-pce-sr-te-p2mp)#
```

Use the **policy** *policy* command to configure the P2MP policy name and enter P2MP Policy sub-mode. Configure the source address, endpoint-set color, Tree-SID label, affinity constraints, and metric type.

```
Router(config-pce-sr-te-p2mp)# policy FOO
Router(config-pce-p2mp-policy)# source ipv4 10.1.1.6
Router(config-pce-p2mp-policy)# color 10 endpoint-set BAR
Router(config-pce-p2mp-policy)# treesid mpls 15200
Router(config-pce-p2mp-policy)# candidate-paths
Router(config-pce-p2mp-policy-path)# constraints
Router(config-pce-p2mp-path-const)# affinity
Router(config-pce-p2mp-path-affinity)# exclude BLUE
Router(config-pce-p2mp-path-affinity)# exit
Router(config-pce-p2mp-path-const)# exit
Router(config-pce-p2mp-policy-path)# preference 100
Router(config-pce-p2mp-policy-path-preference)# dynamic
Router(config-pce-p2mp-path-info)# metric type te
```

```
Router(config-pce-p2mp-path-info)# root
Router(config)#
```

### Configure Multicast on the Root and Leaf Nodes

On the root node of the SR P2MP segment, use the **router pim** command to enter Protocol Independent Multicast (PIM) configuration mode to statically steer multicast flows into an SR P2MP policy.

**Note** Enter this configuration only on an SR P2MP segment. Multicast traffic cannot be steered into a P2P policy.

```
Router(config)# router pim
Router(config-pim)# vrf name
Router(config-pim-name)# address-family ipv4
Router(config-pim-name-ipv4)# sr-p2mp-policy FOO
Router(config-pim-name-ipv4-srp2mp)# static-group 235.1.1.5 10.1.1.6
Router(config-pim-name-ipv4-srp2mp)# root
Router(config)#
```

On the root and leaf nodes of the SR P2MP tree, use the **mdt static segment-routing** command to configure the multicast distribution tree (MDT) core as Tree-SID from the multicast VRF configuration submode.

```
Router(config)# multicast-routing
Router(config-mcast)# vrf TEST
Router(config-mcast-TEST)# address-family ipv4
Router(config-mcast-TEST-ipv4)# mdt static segment-routing
```

On the leaf nodes of an SR P2MP segment, use the **static sr-policy** *p2mp-policy* command to configure the static SR P2MP Policy from the multicast VRF configuration submode to statically decapsulate multicast flows.

```
Router(config)# multicast-routing
Router(config-mcast)# vrf TEST
Router(config-mcast-TEST)# address-family ipv4
Router(config-mcast-TEST-ipv4)# static sr-policy FOO
```

# Running Config

The following example shows how to configure the end point addresses and P2MP SR policy with affinity constraints on SR-PCE.

```
pce
 segment-routing
  traffic-eng
   affinity bit-map
    RED 23
    BLUE 24
    CROSS 25
   !
   p2mp
    endpoint-set BAR
     ipv4 10.1.1.2
     ipv4 10.1.1.3
     ipv4 10.1.1.4
    !
```

```
    policy FOO
     source ipv4 10.1.1.6
     color 10 endpoint-set BAR
     treesid mpls 15200
     candidate-paths
      preference 100
       dynamic
        metric
         type te
        !
       !
      !
      constraints
       affinity
        exclude
         BLUE
        !
       !
      !
     !
    !
   !
  !
 !
!
```

The following example shows how to statically decapsulate multicast flows on the leaf nodes.

```
multicast-routing
 vrf TEST
  address-family ipv4
   static sr-policy FOO
  !
 !
!
```

The following example shows to configure the multicast distribution tree (MDT) core as Tree-SID on the root and leaf nodes.

```
multicast-routing
 vrf TEST
  address-family ipv4
   mdt static segment-routing
  !
 !
!
```

The following example shows how to steer traffic to the SR P2MP policy on the root node.

```
router pim
 vrf TEST
  address-family ipv4
   sr-p2mp-policy FOO
    static-group 232.1.1.5 10.1.1.6
   !
  !
 !
!
```

# Multicast VPN: Dynamic Tree-SID MVPN (with TI-LFA)

*Table 46: Feature History Table*

| Feature Name | Release Information | Feature Description |
|---|---|---|
| Multicast VPN: Dynamic Tree-SID MVPN (with TI-LFA) | Release 7.3.1 | With this feature, you can use SR and MVPN for optimally transporting IP VPN multicast traffic over the SP network, using SR-PCE as a controller.<br><br>With SR's minimal source router configuration requirement, its ability to implement policies with specific optimization objectives and constraints, protect against network failures using TI-LFA FRR mechanism, and use SR-PCE to dynamically generate optimal multicast trees (including when topology changes occur in the multicast tree), the SR-enabled SP network can transport IP multicast traffic efficiently. |

### Prerequisites for Multicast VPN: Tree-SID MVPN With TI-LFA

- The underlay OSPF/IS-IS network is configured, and OSPF/IS-IS adjacency is formed between routers, across the network.
- BGP is configured for the network, and BGP adjacency is formed between routers. BGP MVPN configuration information is provided in this feature document.
- To understand the benefits, know-how, and configuration of SR and SR-TE policies, see About Segment Routing and Configure SR-TE Policies.

### Information About Multicast VPN: Tree-SID MVPN With TI-LFA

Typically, a customer's IP VPN is spread across VPN sites. IP VPN customer traffic is sent from one site to another over a VPN Service Provider (SP) network.

When IP multicast traffic within a (BGP/MPLS) IP VPN is transported over an SP network (say, from **VPN1-Site-A** to **VPN1-Site-B**, as shown in the image), the SP network requires protocols and procedures to optimally transport multicast traffic from a multicast sender in Site-A to multicast receivers in Site-B.

This use case explains how to enable SR multicast for an SP network, and efficiently transport IP VPN multicast traffic (sent from **VPN1-Site-A** and) received at PE router A, through to PE routers D and E, towards receivers in sites **VPN1-Site-B** and **VPN1-Site-C**.

*Figure 25: IP VPN Multicast Traffic Flow Over An SP Network*

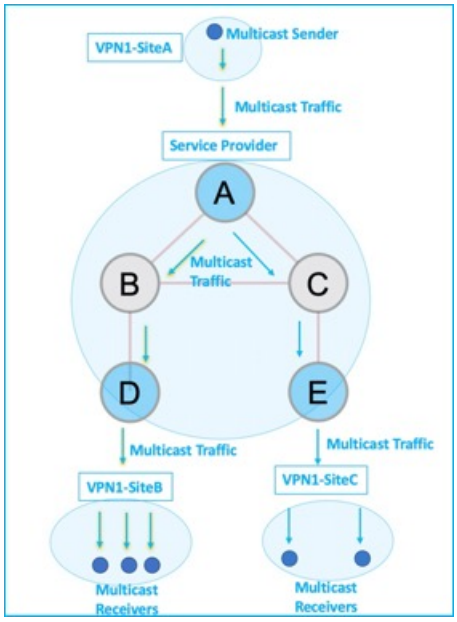


To enable the *Multicast VPN: Tree-SID MVPN With TI-LFA* feature, the following protocols and software applications are used.

**OSPF/IS-IS** - The underlay network is created with OSPF/IS-IS routing protocol, and reachability is established across the network. See *Configure Segment Routing for IS-IS Protocol*or *Configure Segment Routing for OSPF Protocol* chapter for details.

**BGP Multicast VPN (MVPN)** – The PE routers (A, D, and E) are IP VPN end-points for IP multicast traffic arriving at the SP network (at PE router A) and exiting the SP network (at PE routers D and E). So, BGP MVPN is enabled on the PE routers. NSO is used to configure BGP MVPN on the PE routers.

**BGP Auto-Discovery (AD)** - To enable distributed VPN end-point discovery and C-multicast flow mapping and signalling, BGP AD function is configured on the PE routers. A BGP Auto-Discovery route contains multicast router (loopback IP address) and tree identity (segment ID) information. It carries the information in the Provider Multicast Service Interface (PMSI) Tunnel Attribute (PTA).

C-multicast states are signaled using BGP.

**SR** - To transport IP multicast traffic between the VPN end-points (PE routers A, D, and E), Provider (or P-) tunnels are used. In a P-tunnel, the PE devices are the tunnel end-points. P-tunnels can be generated using different technologies (RSVP-TE, P2MP LSPs, PIM trees, mLDP P2MP LSPs, and mLDP MP2MP LSPs). In this use case, Segment Routing (SR) is used for its benefits that were noted earlier.

With SR and SR-PCE, a Tree-SID Point-to-Multipoint (P2MP) segment is used to create P-Tunnels for MVPN. You can specify SR policy optimization objectives (such as *metrics*) and constraints (such as *affinity*) in an SR policy and send it to the SR-PCE controller, so that it can dynamically create SR multicast trees for traffic flow.

**SR-PCE** - This is a controller which, based on the provided SR policy information, computes optimal paths for a multicast tree, and deploys the tree forwarding state on the multicast routers. When a topology change occurs, SR-PCE automatically computes a new, optimal multicast tree, and deploys the new tree forwarding state on the multicast routers.

**TI-LFA** - In SR-TE, Topology-Independent Loop-Free Alternate (TI-LFA) fast reroute (FRR) function is used to reduce link and node failure reaction time. When the primary next-hop (router link) fails, a pre-computed alternate next hop is used to send traffic. TI-LFA FRR is used when transporting IP VPN multicast traffic.

### Overview of Multicast VPN: Tree-SID MVPN With TI-LFA

The following sections provide an overview of Tree-SID MVPN and TI-LFA. The topology remains the same, with PE routers A, D, and E acting as VPN end-points for carrying IP VPN multicast traffic.

#### Tree-SID MVPN Overview

1. For SR, A is designated as the SR head-end router, and D and E are designated as the SR end-points.

   For multicast traffic, A is the root of the SR multicast tree, and D and E are leaf routers of the tree. B and C are the other multicast routers. The objective is to send the IP multicast traffic arriving at A to D and E, as needed

   ***Figure 26: Multicast Tree***

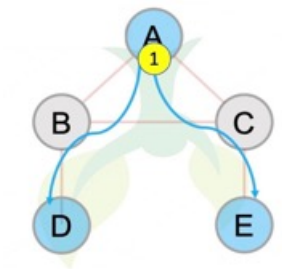


2. A discovers leaf routers' information through BGP MVPN.
3. Path Computation Element Protocol (PCEP) is used for the SR multicast policy communication between A and the SR-PCE server, and communication between PE routers and the SR-PCE server.
4. When the head-end router SR policy is created on A, and PCEP configurations are enabled on the SR-PCE server and all multicast routers, SR-PCE receives the SR policy and leaf router identity information from A.
5. Based on the policy information it receives, including TE objectives and constraints, SR-PCE builds multicast distribution trees in the underlay for efficient VPN traffic delivery.

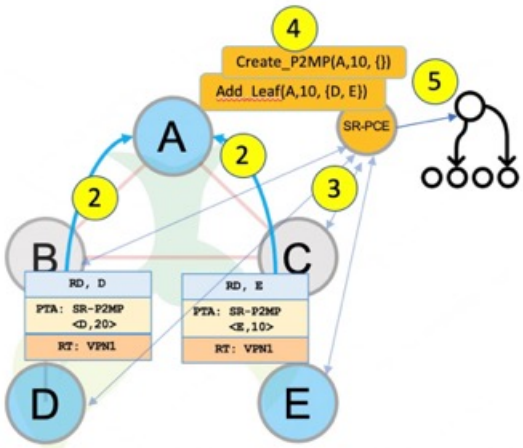

6. SR-PCE assigns an SID for the SR multicast tree policy, and deploys the multicast tree forwarding state on the multicast routers.
7. When IP multicast traffic is sent from VPN1-SiteA to PE router A, it steers it into the SR policy, and sends it towards D and E, which forward it to multicast traffic receivers in the sites VPN1-SiteB and VPN1-SiteC.
8. When a leaf/multicast router is added or removed, PE router A updates the SR multicast policy and sends it to SR-PCE. SR-PCE computes new multicast routes, and deploys the multicast tree forwarding state information on the multicast routers.

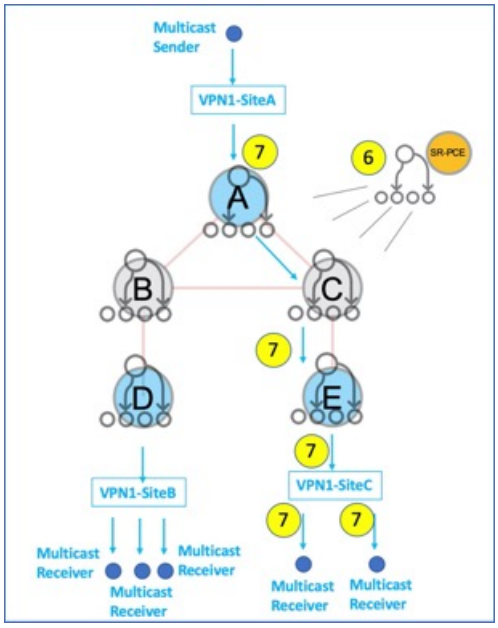


### TI-LFA FRR Overview

High-level TI-LFA FRR function is depicted in these steps:

1. Tree-SID FRR state information.
   - The link from A to B is protected.
   - SID 16002 is the node SID of B.
   - A programs a backup path to B, through C.
2. IP multicast traffic arrives at A which steers the flow onto the tree.
3. A encapsulates and replicates to B, but the link to B is down.

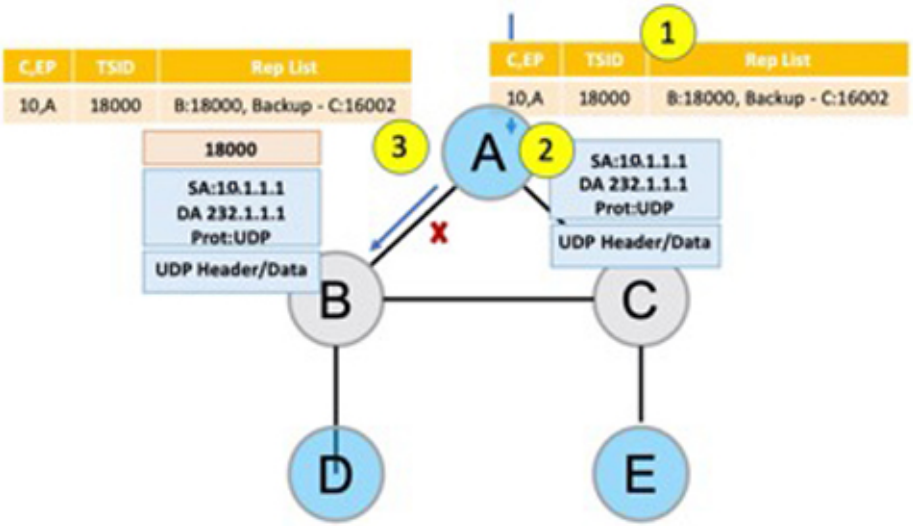


4. A sends the traffic on the backup path, to C.
5. C sends the traffic to B where normal traffic processing resumes.

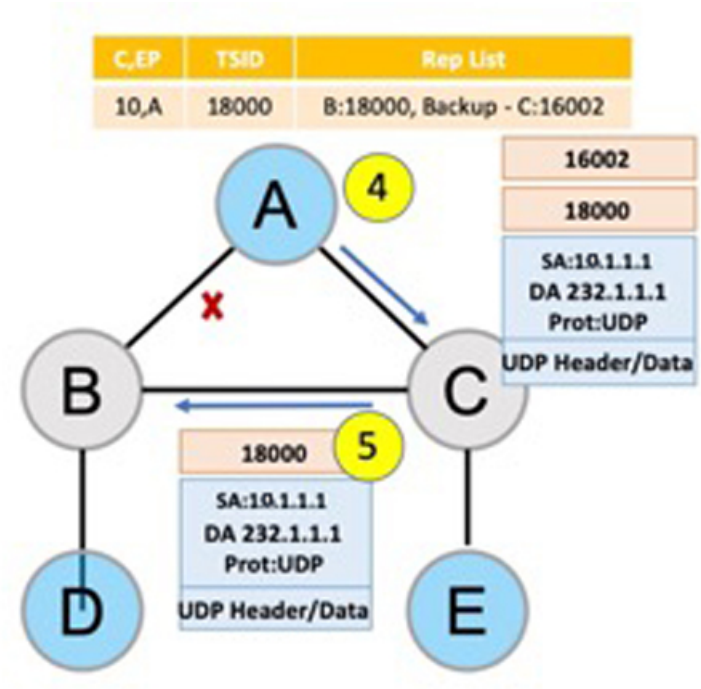


### SR Multicast Tree Types

This is an overview of the types of SR multicast trees you can configure, depending on your requirement. You can create a full mesh, on-demand, or optimal multicast tree for IP VPN multicast flow in the SP network.

*Figure 27: Full Mesh Multicast Tree*

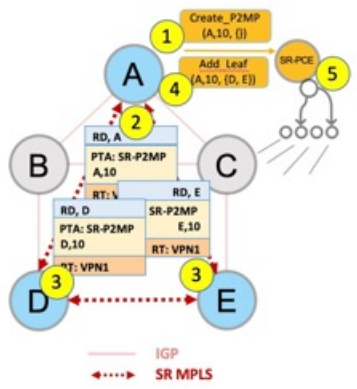


1. A assigns Tree-ID 10 and invokes a Create an SR multicast tree request by sending the multicast router and tree ID information (A, 10) towards SR-PCE.
2. A announces BGP AD Inclusive PMSI (I-PMSI) route with the PTA (A, 10). Inclusive PMSI - Traffic that is multicast by a PE router on an I-PMSI is received by all other PEs in the MVPN. I-PMSIs are generated by Inclusive P-tunnels .
3. A discovers VPN endpoints D and E from their BGP AD Type I-PMSI route messages.
4. A invokes an Add SR multicast leaf router request (for D and E) to SR-PCE.
5. SR-PCE computes and generates the multicast tree forwarding state information on all the routers that are part of the tree.

*Figure 28: On-Demand SR Multicast Tree*

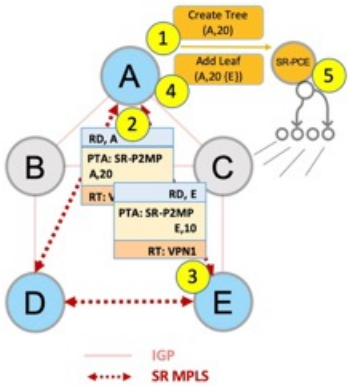


1. A assigns Tree-ID 20 and invokes a Create an SR multicast tree request by sending the multicast router and tree ID information (A, 20) towards SR-PCE.
2. A announces BGP AD Selective PMSI (or S-PMSI) route with PTA (A, 20). A sets the leaf-info-required to discover endpoint interest set.

   *Selective PMSI* - Traffic multicast by a PE on an S-PMSI is received by some PEs in the MVPN. S-PMSIs are generated by Selective P-tunnels.

3. E has a receiver behind it, and announces a BGP-AD leaf route towards A. A discovers service endpoint E for the on-demand tree.
4. A invokes an Add SR multicast leaf router request (for E) to SR-PCE.
5. SR-PCE computes and generates the multicast tree information for all the routers that are part of the tree.

*Figure 29: Optimal Multicast Tree*

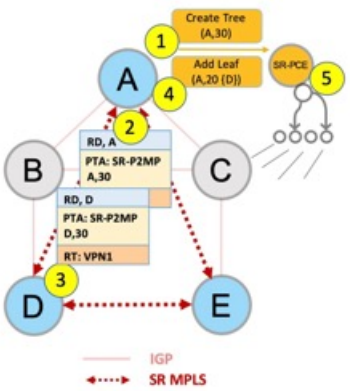


1. A decides to optimize a flow and assigns Tree-ID 30 and invokes a Create an SR multicast tree request by sending the multicast router and tree ID information (A, 30) towards SR-PCE.
2. A announces BGP AD I-PMSI route with PTA (A,30). A sets the leaf-info-required to discover endpoint interest set.
3. D has a receiver behind it, and announces a BGP-AD leaf route towards A. A discovers service endpoint D for optimized flow.
4. A invokes an Add SR multicast leaf router request (for D) to SR-PCE.
5. SR-PCE computes and generates the multicast tree information for all the routers that are part of the tree.

## Configurations

**Head End Router Configuration (Router A)** - The following configuration is specific to the head end router.

### Configure TE Constraints and Optimization Parameters

```
Router# configure terminal
Router(config)# segment-routing traffic-engineering
```

An affinity bit-map is created so that it can be applied to a link or interface.

```
Router(config-sr-te)# affinity-map name 10 bit-position 24
Router(config-sr-te)# commit
```

An affinity (or relationship) is created between the SR policy path and the link color so that SR-TE computes a path that includes or excludes links, as specified. The head-end router automatically follows the actions defined in the ODN template (for color 10) upon the arrival of VPN routes with a BGP color extended community that matches color 10.

```
Router(config)# segment-routing traffic-engineering
Router(config-sr-te)# on-demand color 10 dynamic
Router(config-sr-te-color-dyn)# affinity include-all name red
```

```
Router(config-sr-te-color-dyn)# affinity include-any name blue
Router(config-sr-te-color-dyn)# affinity exclude-any name green
Router(config-sr-te-color-dyn)# metric type te
Router(config-sr-te-color-dyn)# commit
```

The SR policy configuration on the head-end router A will be sent to the SR-PCE server, after a connection is established between A and SR-PCE.

### Multicast Router Configuration

#### Configure PCEP Client on Multicast Routers

Associate each multicast router as a client of the SR-PCE server. The **pce address ipv4** command specifies the SR-PCE server's IP address.

```
Router# configure terminal
Router(config)# segment-routing traffic-engineering
Router(config-sr-te)# pcc pce address ipv4 3.3.3.3
Router(config-pcc-pce)# commit
```

### SR PCE Server Configuration

#### Configure Label Range for Multicast Trees

Configure the label range to be used for transporting IP multicast traffic in SP network.

```
Router(config)# pce segment-routing traffic-eng p2mp label-range min 30000 max 60000
Router(config)# commit
```

#### Configure FRR

The following configurations enable FRR for all SR multicast (P2MP) trees, including dynamic and static implementations.

The **lfa** keyword enables LFA FRR on the PCE server.

```
Router(config)# pce segment-routing traffic-eng p2mp fast-reroute lfa
Router(config)# commit
```

Alternatively, you can configure FRR for each individual tree using the following configuration. The **lfa** keyword under a specific multicast policy (**tree1** in this example) enables LFA FRR function for the specified SR multicast P2MP tree.

For dynamic trees, L-flag in LSP Attributes PCEP object controls FRR on a tree.

```
Router(config)# pce
Router(config-pce)# address ipv4 192.168.0.5
Router(config-pce)# segment-routing traffic-eng p2mp policy tree1 fast-reroute lfa
Router(config-pce)# commit
```

You can create FRR node sets using the **frr-node-set from ipv4** *address* and **frr-node-set to ipv4** *address* commands to specify the *from* and *to* paths on a multicast router that requires FRR protection. In this configuration, the PCE server is configured to manage the FRR function for traffic from 192.168.0.3 sent towards 192.168.0.4 and 192.168.0.5.

```
Router(config)# pce
Router(config-pce)# address ipv4 192.168.0.5
Router(config-pce)# segment-routing traffic-eng
Router(config-pce-sr-te)# p2mp
Router(config-pce-sr-te-p2mp)# frr-node-set from ipv4 192.168.0.3
Router(config-pce-sr-te-p2mp)# frr-node-set to ipv4 192.168.0.4
Router(config-pce-sr-te-p2mp)# frr-node-set to ipv4 192.168.0.5
Router(config-pce-sr-te-p2mp)# commit
```

### Disable ECMP load splitting

To disable ECMP load splitting of different trees on the SR-PCE server, configure the **multipath-disable** command.

```
Router(config)# pce segment-routing traffic-eng p2mp multipath-disable
Router(config)# commit
```

### Multicast Routing Configuration On PE Routers

The following MVPN configurations are required for VPN end-points, the 3 PE routers.

### Configure Default MDT SR P2MP MVPN Profile

In this configuration, an MDT profile of the type *default* is created, and the SR multicast policy with color 10 will be used to send IP multicast traffic, as per the constraints and optimizations of the policy, through the multicast tree.

You can also specify the FRR LFA function with the **mdt default segment-routing mpls fast-reroute lfa** command.

```
Router(config)# multicast-routing vrf cust1
Router(config-mcast-cust1)# address-family ipv4
Router(config-mcast-cust1-ipv4)# mdt default segment-routing mpls color 10
Router(config-mcast-cust1-ipv4)# commit
```

### Configure Partitioned MDT SR P2MP MVPN Profile

In this configuration, an MDT profile of the type *partitioned* is created, and the SR multicast policy with color 10 will be used to send IP multicast traffic, as per the constraints and optimizations of the policy, through the multicast tree.

You can also specify the FRR LFA function with the **mdt partitioned segment-routing mpls fast-reroute lfa** command.

```
Router(config)# multicast-routing vrf cust1
Router(config-mcast-cust1)# address-family ipv4
Router(config-mcast-cust1-ipv4)# mdt partitioned segment-routing mpls color 10
Router(config-mcast-cust1-ipv4)# commit
```

The following Data MVPN configuration is required at the Ingress PE (router A) where the multicast flows need to be steered onto the *data* MDT for SR multicast traffic flow.

**Note** - *Data* MDT can be configured for *Default* and *Partitioned* profiles.

### Configure Data MDT for SR P2MP MVPN

In this configuration, an MDT profile of the type *data* is created, and the SR multicast policy with color 10 will be used to send IP multicast traffic, as per the constraints and optimizations of the policy, through the multicast tree.

- You can enable the FRR LFA function with the **mdt data segment-routing mpls fast-reroute lfa** command. This enables LFA FRR for SR multicast trees created for all data MDT profiles.
- As an alternative to the color keyword, you can specify a route policy in the **route-policy** command, and define the route policy separately (as mentioned in the next configuration).
- The **threshold** command specifies the threshold above which a multicast flow is switched onto the data MDT. The **immediate-switch** keyword enables an immediate switch of a multicast flow to the data MDT, without waiting for threshold limit to be crossed.
- The **customer-route-acl** keyword specifies an ACL to enable specific multicast flows to be put on to the data MDT.

- **color** and **fast-reroute lfa** keywords are mutually exclusive with the **route-policy** configuration. The objective is to apply constraints (through **color**) or FRR (through LFA protection) to either all data MDTs, or apply them selectively per data MDT, using the **set on-demand-color** and **set fast-reroute lfa** options in the route policy (configured in the **mdt data** configuration).

```
Router(config)# multicast-routing vrf cust1
Router(config-mcast-cust1)# address-family ipv4
Router(config-mcast-cust1-ipv4)# mdt data segment-routing mpls 2 color 10
Router(config-mcast-cust1-ipv4)# commit
```

### Route Policy Example

The route policy designates multicast flow-to-SR multicast policy mapping, with different colors.

- With this configuration, IP multicast flows for the 232.0.0.1 multicast group are steered into the SR multicast policy created with the on-demand color 10, while flows for 232.0.0.2 are steered into the policy created with color 20.
- The *data* MDT SR multicast tree created for the 232.0.0.2 multicast group is enabled with FRR LFA protection.
- Route policies can also be used to match other parameters, such as source address.

```
Router(config)# route-policy TSID-DATA
Router(config-rpl)# if destination in (232.0.0.1) then
Router(config-rpl-if)# set on-demand-color 10
Router(config-rpl-if)# pass
Router(config-rpl-if)# elseif destination in (232.0.0.2) then
Router(config-rpl-elseif)# set on-demand-color 20
Router(config-rpl-elseif)# set fast-reroute lfa
Router(config-rpl-elseif)# pass
Router(config-rpl-elseif)# endif
Router(config-rpl)# end-policy
Router(config)# commit
```

### Configure MVPN BGP Auto-Discovery for SR P2MP

The following configuration is required on all PE routers, and is mandatory for *default* MDT, *partitioned* MDT, and *data* MDT.

Configure the BGP Auto-Discovery function for transporting IP multicast traffic.

```
Router(config)# multicast-routing vrf cust1
Router(config-mcast-cust1)# address-family ipv4
Router(config-mcast-cust1-ipv4)# bgp auto-discovery segment-routing
Router(config-mcast-cust1-ipv4-bgp-ad)# commit
```

## Verification

**View MVPN Context Information** - You can view MVPN VRF context information with these commands.

### View Default MDT Configuration

This command displays SR multicast tree information, including the MDT details (of *default* type, etc), and customer VRF information (route target, route distinguisher, etc).

```
Router# show mvpn vrf vpn1 context

MVPN context information for VRF vpn1 (0x9541cf0)

RD: 1:10 (Valid, IID 0x1), VPN-ID: 0:0
Import Route-targets : 2
```

```
  RT:192.168.0.4:0, BGP-AD
  RT:192.168.0.4:17, BGP-AD
BGP Auto-Discovery Enabled (I-PMSI added)
SR P2MP Core-tree data:
  MDT Name: TRmdtvpn1, Handle: 0x4150, idb: 0x956fc30
  MTU: 1376, MaxAggr: 255, SW_Int: 30, AN_Int: 60
  RPF-ID: 3, C:0, O:1, D:0, CP:0
  Static Type : - / -
  Def MDT ID: 524289 (0x93993f0), added: 1, HLI: 0x80001, Cfg: 1/0
  Part MDT ID: 0 (0x0), added: 0, HLI: 0x00000, Cfg: 0/0
  Ctrl Trees : 0/0/0, Ctrl ID: 0 (0x0), Ctrl HLI: 0x00000
```

### View Partitioned MDT Configuration

This command displays SR multicast tree information, including the MDT details (of *partitioned* type, etc), and customer VRF information (route target, route distinguisher, etc).

```
Router# show mvpn vrf vpn1 context

MVPN context information for VRF vpn1 (0x9541cf0)

RD: 1:10 (Valid, IID 0x1), VPN-ID: 0:0
Import Route-targets : 2
  RT:192.168.0.4:0, BGP-AD
  RT:192.168.0.4:17, BGP-AD
BGP Auto-Discovery Enabled (I-PMSI added) , MS-PMSI sent
SR P2MP Core-tree data:
  MDT Name: TRmdtvpn1, Handle: 0x4210, idb: 0x956fc30
  MTU: 1376, MaxAggr: 255, SW_Int: 30, AN_Int: 60
  RPF-ID: 1, C:0, O:1, D:0, CP:0
  Static Type : - / -
  Def MDT ID: 0 (0x0), added: 0, HLI: 0x00000, Cfg: 0/0
  Part MDT ID: 524292 (0x9399318), added: 1, HLI: 0x80004, Cfg: 1/0
  Ctrl Trees : 0/0/0, Ctrl ID: 0 (0x0), Ctrl HLI: 0x00000
```

### View Partitioned MDT Ingress PE Configuration

This command displays SR multicast tree information on the PE router that receives the multicast traffic on the SP network. The information includes PE router details, MDT details, Tree-SID details, and the specified customer VRF information.

```
Router# show mvpn vrf vpn1 pe

MVPN Provider Edge Router information

VRF : vpn1

PE Address : 192.168.0.3 (0x9570240)
  RD: 0:0:0 (null), RIB_HLI 0, RPF-ID 13, Remote RPF-ID 0, State: 0, S-PMSI: 2
  PPMP_LABEL: 0, MS_PMSI_HLI: 0x00000, Bidir_PMSI_HLI: 0x00000, MLDP-added: [RD 0, ID 0,
Bidir ID 0, Remote Bidir ID 0], Counts(SHR/SRC/DM/DEF-MD): 0, 0, 0, 0, Bidir: GRE RP Count
 0, MPLS RP Count 0RSVP-TE added: [Leg 0, Ctrl Leg 0, Part tail 0 Def Tail 0, IR added:
[Def Leg 0, Ctrl Leg 0, Part Leg 0, Part tail 0, Part IR Tail Label 0
  Tree-SID Added: [Def/Part Leaf 1, Def Egress 0, Part Egress 0, Ctrl Leaf 0]
  bgp_i_pmsi: 1,0/0 , bgp_ms_pmsi/Leaf-ad: 1/1, bgp_bidir_pmsi: 0, remote_bgp_bidir_pmsi:
0, PMSIs: I 0x9570378, 0x0, MS 0x94e29d0, Bidir Local: 0x0, Remote: 0x0, BSR/Leaf-ad 0x0/0,
 Autorp-disc/Leaf-ad 0x0/0, Autorp-ann/Leaf-ad 0x0/0
 IIDs: I/6: 0x1/0x0, B/R: 0x0/0x0, MS: 0x1, B/A/A: 0x0/0x0/0x0

  Bidir RPF-ID: 14, Remote Bidir RPF-ID: 0
  I-PMSI:   Unknown/None (0x9570378)
  I-PMSI rem:  (0x0)
  MS-PMSI:   Tree-SID [524290, 192.168.0.3] (0x94e29d0)
  Bidir-PMSI:  (0x0)
  Remote Bidir-PMSI:  (0x0)
```

```
  BSR-PMSI:  (0x0)
  A-Disc-PMSI:  (0x0)
  A-Ann-PMSI:  (0x0)
  RIB Dependency List: 0x0
  Bidir RIB Dependency List: 0x0
    Sources: 0, RPs: 0, Bidir RPs: 0
```

### View Partitioned MDT Egress PE Configuration

This command displays SR multicast tree information on the MVPN egress PE router that sends multicast traffic from the SP network towards multicast receivers in the destination sites. The information includes PE router, Tree-SID, MDT, and the specified customer VRF details.

```
Router# show mvpn vrf vpn1 pe

MVPN Provider Edge Router information

PE Address : 192.168.0.4 (0x9fa38f8)
  RD: 1:10 (valid), RIB_HLI 0, RPF-ID 15, Remote RPF-ID 0, State: 1, S-PMSI: 2
  PPMP_LABEL: 0, MS_PMSI_HLI: 0x00000, Bidir_PMSI_HLI: 0x00000, MLDP-added: [RD 0, ID 0,
Bidir ID 0, Remote Bidir ID 0], Counts(SHR/SRC/DM/DEF-MD): 1, 1, 0, 0, Bidir: GRE RP Count
 0, MPLS RP Count 0RSVP-TE added: [Leg 0, Ctrl Leg 0, Part tail 0 Def Tail 0, IR added:
[Def Leg 0, Ctrl Leg 0, Part Leg 0, Part tail 0, Part IR Tail Label 0
  Tree-SID Added: [Def/Part Leaf 0, Def Egress 0, Part Egress 1, Ctrl Leaf 0]
  bgp_i_pmsi: 1,0/0 , bgp_ms_pmsi/Leaf-ad: 1/0, bgp_bidir_pmsi: 0, remote_bgp_bidir_pmsi:
0, PMSIs: I 0x9f77388, 0x0, MS 0x9fa2f98, Bidir Local: 0x0, Remote: 0x0, BSR/Leaf-ad 0x0/0,
 Autorp-disc/Leaf-ad 0x0/0, Autorp-ann/Leaf-ad 0x0/0
 IIDs: I/6: 0x1/0x0, B/R: 0x0/0x0, MS: 0x1, B/A/A: 0x0/0x0/0x0

  Bidir RPF-ID: 16, Remote Bidir RPF-ID: 0
  I-PMSI:   Unknown/None (0x9f77388)
  I-PMSI rem:  (0x0)
  MS-PMSI:   Tree-SID [524292, 192.168.0.4] (0x9fa2f98)
  Bidir-PMSI:  (0x0)
  Remote Bidir-PMSI:  (0x0)
  BSR-PMSI:  (0x0)
  A-Disc-PMSI:  (0x0)
  A-Ann-PMSI:  (0x0)
  RIB Dependency List: 0x9f81370
  Bidir RIB Dependency List: 0x0
    Sources: 1, RPs: 1, Bidir RPs: 0
```

### View Data MDT Information

The commands in this section displays SR multicast tree information for *data* MDTs. The information includes cache, router-local, and remote MDT information.

### View Data MDT Cache Information

```
Router# show pim vrf vpn1 mdt cache
Core Source      Cust (Source, Group)                Core Data        Expires
192.168.0.3      (26.3.233.1, 232.0.0.1)             [tree-id 524292]  never

192.168.0.4      (27.3.233.6, 232.0.0.1)             [tree-id 524290]  never

   Leaf AD:  192.168.0.3
```

### View Local MDTs Information

```
Router# show pim vrf vpn1 mdt sr-p2mp local

Tree                           MDT             Cache DIP Local VRF Routes  On-demand
Identifier                     Source          Count     Entry Using Cache Color
[tree-id 524290 (0x80002)]     192.168.0.4     1     N   Y     1           10
   Tree-SID Leaf:  192.168.0.3
```

### View Remote MDTs Information

```
Router # show pim vrf vpn1 mdt sr-p2mp remote

Tree                          MDT             Cache DIP Local VRF Routes  On-demand
Identifier                    Source          Count     Entry Using Cache Color
[tree-id 524290 (0x80002)]    192.168.0.4     1     N   N     1           0
```

### View MRIB MPLS Forwarding Information

This command displays labels used for transporting IP multicast traffic, on a specified router.

```
Router# show mrib mpls forwarding

LSP information (XTC) :
  LSM-ID: 0x00000, Role: Head, Head LSM-ID: 0x80002
    Incoming Label       : (18000)
    Transported Protocol : <unknown>
    Explicit Null        : None
    IP lookup            : disabled

    Outsegment Info #1 [H/Push, Recursive]:
      OutLabel: 18000, NH: 192.168.0.3, Sel IF: GigabitEthernet0/2/0/0

LSP information (XTC) :
  LSM-ID: 0x00000, Role: Tail, Peek
  RPF-ID: 0x00011, Assoc-TIDs: 0xe0000011/0x0, MDT: TRmdtvpn1
    Incoming Label       : 18001
    Transported Protocol : <unknown>
    Explicit Null        : None
    IP lookup            : enabled

    Outsegment Info #1 [T/Pop]:
      No info.
```

### SR-PCE Show Commands

### View Tree Information On PCE Server

This command displays SR multicast tree information on the SR-PCE server.

```
Router# show pce lsp p2mp

Tree: sr_p2mp_root_192.168.0.1_tree_id_524290
 Label:    18000     Operational: up  Admin: up
 Metric Type: TE
 Transition count: 3
 Uptime: 00:00:03 (since Fri Jan 24 14:57:51 PST 2020)
 Source: 192.168.0.1
 Destinations: 192.168.0.4
 Nodes:
  Node[0]: 192.168.0.2 (rtrM)
   Role: Transit
   Hops:
    Incoming: 18000 CC-ID: 4
    Outgoing: 18000 CC-ID: 4 (17.17.17.4) [rtrR]
  Node[1]: 192.168.0.1 (rtrL1)
   Role: Ingress
   Hops:
    Incoming: 18000 CC-ID: 5
    Outgoing: 18000 CC-ID: 5 (12.12.12.2) [rtrM]
  Node[2]: 192.168.0.4 (rtrR)
   Role: Egress
   Hops:
    Incoming: 18000 CC-ID: 6
```

For dynamic SR multicast trees created for MVPN, the **show** command has filters to view root multicast router and Tree-ID information. When the root router is specified, all multicast trees from that root are displayed. When root and Tree-ID are specified, only the specified tree information is displayed.

```
Router# show pce lsp p2mp root ipv4 10.1.1.1 524289

Tree: sr_p2mp_root_10.1.1.1_tree_id_524289, Root: 10.1.1.1 ID: 524289
 Label:    20000     Operational: up  Admin: up
 PCC: 10.1.1.1

 Local LFA FRR: Disabled
 Metric Type: TE
 Transition count: 11
 Uptime: 00:03:37 (since Mon May 11 12:53:33 PDT 2020)
 Destinations: 10.1.1.3, 10.1.1.4, 10.1.1.5
 Nodes:
  Node[0]: 10.1.1.1 (root1)
   Role: Ingress
   Hops:
    Incoming: 20000 CC-ID: 26
    Outgoing: 20000 CC-ID: 26 (192.168.114.4) [mid-4]
    Outgoing: 20000 CC-ID: 26 (192.168.112.2) [mid-2]
  Node[1]: 10.1.1.4 (mid-4)
   Role: Egress
   Hops:
    Incoming: 20000 CC-ID: 27
  Node[2]: 10.1.1.2 (mid-2)
   Role: Transit
   Hops:
    Incoming: 20000 CC-ID: 28
    Outgoing: 20000 CC-ID: 28 (192.168.123.3) [leaf-3]
    Outgoing: 20000 CC-ID: 28 (192.168.125.5) [leaf-5]
  Node[3]: 10.1.1.3 (leaf-3)
   Role: Egress
   Hops:
    Incoming: 20000 CC-ID: 29
  Node[4]: 10.1.1.5 (leaf-5)
   Role: Egress
   Hops:
    Incoming: 20000 CC-ID: 30
```

The following output shows that LFA FRR is enabled on the hop from rtrR to rtrM. Unlike typical multicast replication where the address displayed is the remote address on the link to a downstream router, the IP address 192.168.0.3 (displayed with an exclamation mark) is the router-ID of the downstream router rtrM. The output also displays the LFA FRR state for the multicast tree.

```
Router# show pce lsp p2mp

Tree: sr_p2mp_root_192.168.0.4_tree_id_524290
 Label:    18000     Operational: up  Admin: up
 LFA FRR: Enabled
 Metric Type: TE
 Transition count: 1
 Uptime: 3d19h (since Thu Feb 13 13:43:40 PST 2020)
 Source: 192.168.0.4
 Destinations: 192.168.0.1, 192.168.0.2
 Nodes:
  Node[0]: 192.168.0.3 (rtrM)
   Role: Transit
   Hops:
    Incoming: 18000 CC-ID: 1
    Outgoing: 18000 CC-ID: 1 (12.12.12.1) [rtrL1]
    Outgoing: 18000 CC-ID: 1 (15.15.15.2) [rtrL2]
  Node[1]: 192.168.0.4 (rtrR)
```

```
   Role: Ingress
   Hops:
    Incoming: 18000 CC-ID: 2
    Outgoing: 18000 CC-ID: 2 (192.168.0.3!) [rtrM]
  Node[2]: 192.168.0.1 (rtrL1)
   Role: Egress
   Hops:
    Incoming: 18000 CC-ID: 3
  Node[3]: 192.168.0.2 (rtrL2)
   Role: Egress
   Hops:
    Incoming: 18000 CC-ID: 4
```

### Multicast Tree Information on Routers

```
Router# show segment-routing traffic-eng p2mp policy

SR-TE P2MP policy database:
----------------------
! - Replications with Fast Re-route

Policy: sr_p2mp_root_192.168.0.1_tree_id_524290  LSM-ID: 0x2
 Role: Leaf
 Replication:
  Incoming label: 18001 CC-ID: 6

Policy: sr_p2mp_root_192.168.0.4_tree_id_524290  LSM-ID: 0x80002 (PCC-initiated)
 Color: 0
 LFA FRR: Disabled
 Role: Root
 Replication:
  Incoming label: 18000 CC-ID: 2
  Interface: None [192.168.0.3!]  Outgoing label: 18000 CC-ID: 2
 Endpoints:
  192.168.0.1, 192.168.0.2
```

For SR multicast policies originated locally on the router (root router of a dynamic MVPN multicast policy) additional policy information is displayed. The information includes color, end points, and whether LFA FRR is requested by the local application. When the SR-PCE server enables LFA FRR on a specific hop, the outgoing information shows the address of the next router with an exclamation mark and None is displayed for the outgoing interface.

For dynamic SR multicast trees created for MVPN, the **show** command has filters for displaying root multicast router and Tree-ID information. When the root router is specified, all multicast trees for that root are displayed. When root and Tree-ID are specified, only the specified tree information is displayed.

```
Router# show segment-routing traffic-eng p2mp policy root ipv4 1.1$

SR-TE P2MP policy database:
----------------------
! - Replications with Fast Re-route, * - Stale dynamic policies/endpoints

Policy: sr_p2mp_root_10.1.1.1_tree_id_524289  LSM-ID: 0x691
 Root: 10.1.1.1, ID: 524289
 Role: Transit
 Replication:
  Incoming label: 20000 CC-ID: 28
  Interface: Bundle-Ether23 [192.168.123.3]  Outgoing label: 20000 CC-ID: 28
  Interface: Bundle-Ether25 [192.168.125.5]  Outgoing label: 20000 CC-ID: 28

Policy: sr_p2mp_root_10.1.1.1_tree_id_524290  LSM-ID: 0x692
 Root: 10.1.1.1, ID: 524290
 Role: Transit
 Replication:
```

```
Incoming label: 19999 CC-ID: 28
Interface: Bundle-Ether23 [192.168.123.3]  Outgoing label: 19999 CC-ID: 28
Interface: Bundle-Ether25 [192.168.125.5]  Outgoing label: 19999 CC-ID: 28
```

# Multicast: SR-PCE High Availability (HA) Support for Dynamic Tree-SID (mVPN)

*Table 47: Feature History Table*

| Feature Name | Release | Description |
|---|---|---|
| High Availability Support for Dynamic Tree-SID (Multicast VPN) | Release 7.8.1 | We have introduced more resilience for building multicast VPN (mVPN) dynamic tree-SIDs by providing High Availability (HA) for the Segment Routing Path Computation Element (SR-PCE). This HA is made possible by adding another SR-PCE to the network.<br>As a result, there's a noncompute or standby PCE for the mVPN dynamic policies. The root Path Computation Element Client (PCC) elects the active SR-PCE. If an active PCE failure occurs, the root PCC delegates the compute role for the mVPN dynamic Tree-SID to the standby SR-PCE. |

Segment Routing Point-to-Multipoint policy (SR-P2MP) in Tree-SID is the solution for carrying multicast traffic in the Segment Routing Domain but it works in the presence of just one SR-PCE in the network. However, the SR-PCE HA feature supports the mVPN dynamic Tree-SID with more than one SR-PCE to manage the network.

For example, when PCE1 is unavailable due to a system failure or reboot, PCE2 uses the PCReport packet information sent by PCC and assumes the role of PCE1 ensuring the following:

- Avoid failure of the cluster with no or minimal data loss.
- PCE2 is a hot-standby PCE that detects the failure as they occur ensuring high availability of the cluster always.
- Recovery of the network occurs with minimal or with no data loss.

### Network Handling

Understanding how each PCE operates in different states helps in configuring the SR-PCE HA and ensuring steady operability without any data loss. Following sections describe each state:

- **Steady State**

  In steady state, the following events occur:

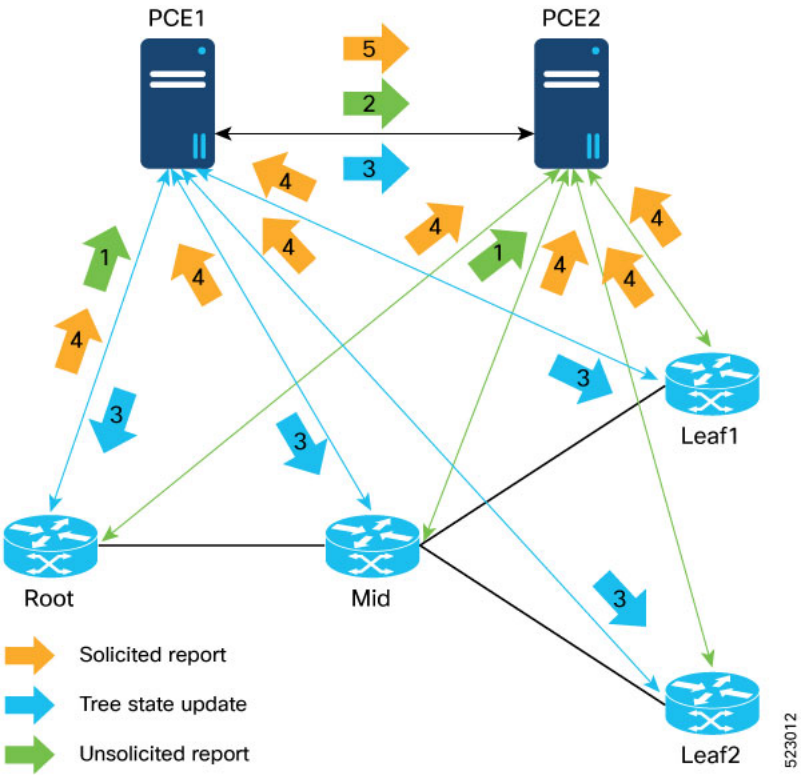


1. Root request SR-P2MP tree creation:
   - Delegates to PCE1
   - Sends the PCReport to PCE1 with **D-bit** set to **1**
   - Sends the PCReport to PCE2 with **D-bit** set to **0**
2. PCE1 forwards the PCReport to PCE2.
3. PCE1 acts as the compute PCE:
   - Sends PCInitiate to the Mid and Leaf nodes
   - Sends PCUpdate to Root
   - Syncs Tree State for all the nodes with state-sync PCE2
4. All PCCs respond with PCReport:
   - With **D-bit** set to **1** to delegated "Creator" PCE (PCE1)
   - With **D-bit** set to **0** to the other PCE2
5. PCE1 forwards all the reports with D-bit set from PCCs to PCE2.

- **PCE Failure**

  When PCE fails, the following events occur:

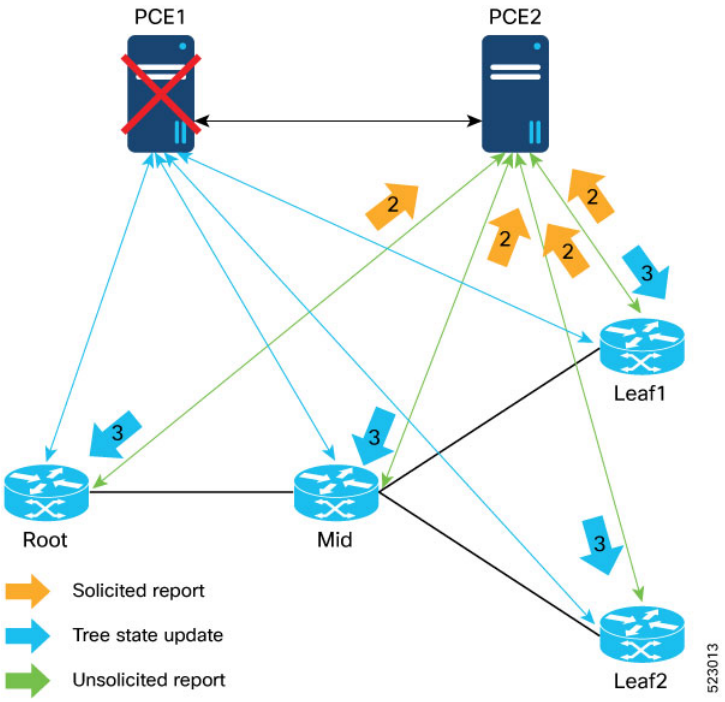


1. PCE1 fails.
2. Root re-delegate to PCE2 immediately and sends the PCReport with **D-bit** Set to **1**
   - With the PCC-centric approach, Mid and Leaf nodes PCCs also re-delegate to PCE2 immediately and sends the PCReport with **D-bit** set to **1**
3. PCE2 becomes the Compute PCE, recomputes Tree-SID and sends the update to PCCs.

- **PCE Restore**

  Image

  When PCE restores, the following events occur:

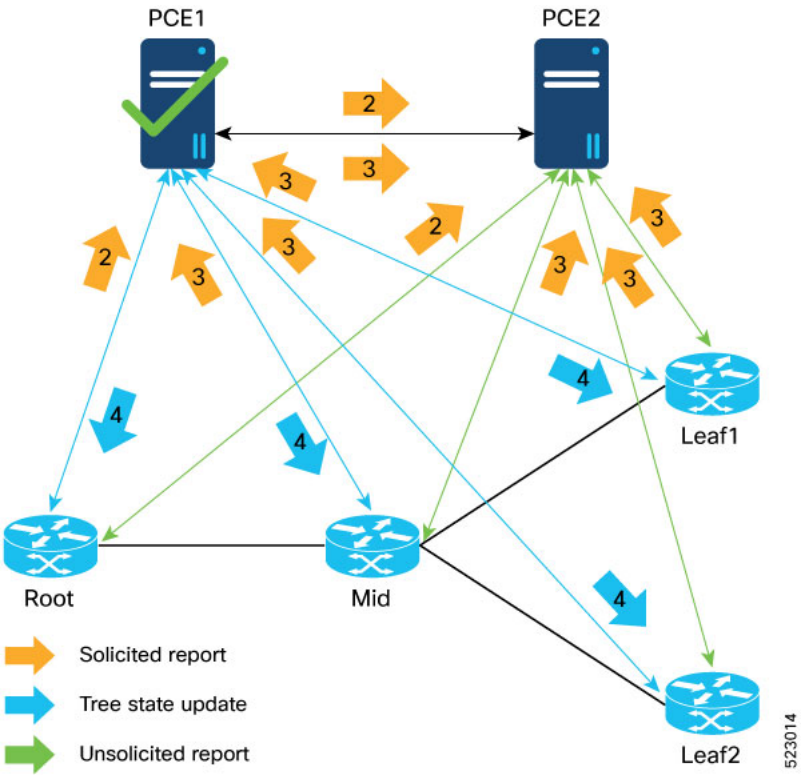


1. PCE1 is restored.
2. Root redelegates to PCE1 after the delegation timer expires:
   - Sends the PCReport to PCE1 with **D-bit** set to **1**
   - Sends the PCReport to PCE2 with **D-bit** set to **0**
3. With the PCC-Centric approach, Mid and Leaf nodes PCCs also re-delegate to PCE1 after the Delegation timer expires.
   - Sends the PCReport to PCE2 with **D-bit** set to **0**
4. PCE1 becomes the compute PCE and recomputes the Tree-SID.
   - Sends PCUpdate to PCCs participating in Tree-SID creation

- **Redundant or Backup PCE Down or Up Event**

  When the redundant or the backup PCE is down or up, the following events occur:

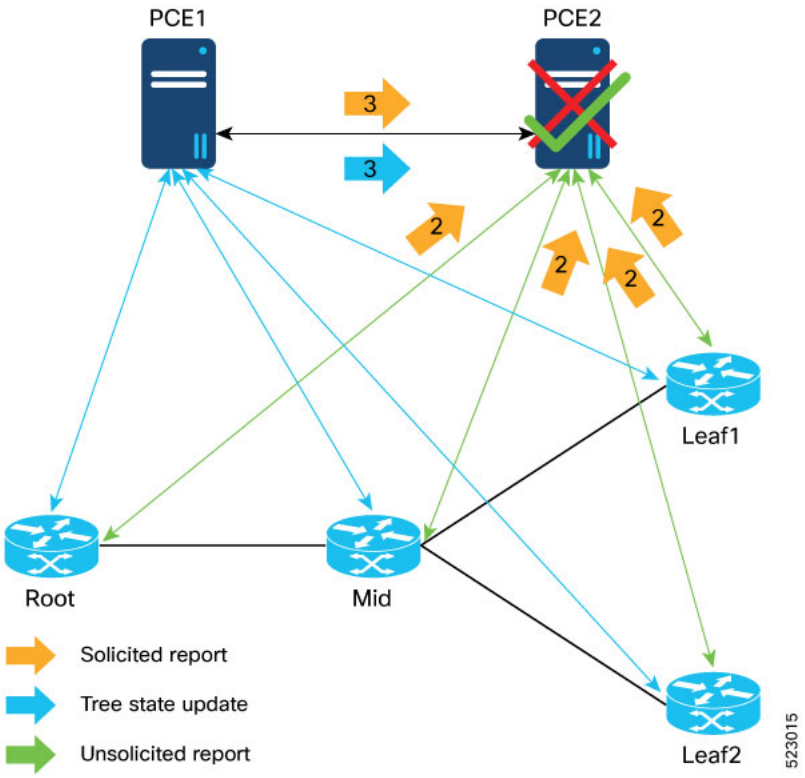


1. When the backup PCE fails or is down, it is a "No-Operation" event from the Tree's point of view.
2. When the backup PCE is back up then all the PCCs resend the PCReports with **D-bit** set to **0**.
3. PCE1 syncs all the delegated reports and locally computed Tree states with PCE2.

- **PCC Initiated PCEP Session with the Root is Down**

  When the PCC initiated PCEP session with the Root is down, the following events occur:

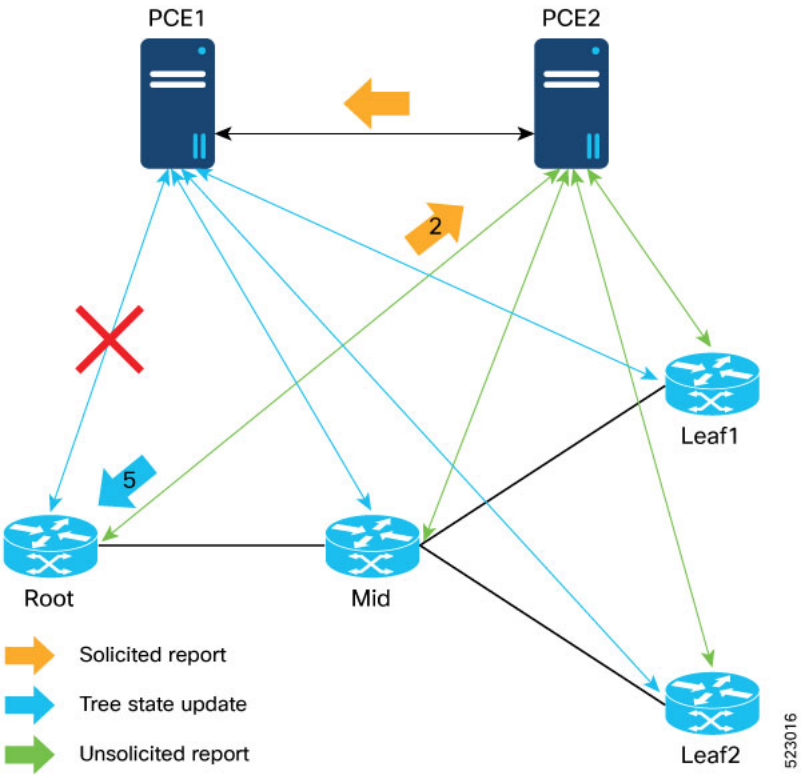


1. PCEP session from the Root to PCE1 is down but the Mid and Leaf nodes continue to have the session with PCE1.
2. Root redelegates to PCE2 immediately and sends the PCReport with **D-bit** set to **1**.
3. PCE2 takes the responsibility of the compute PCE, recomputes Tree, and sends the PCUpdate.

**Note** Mid or leaf nodes are still delegated to PCE1, any updates to these nodes are done through PCE1.

- **PCC Initiated PCEP Session with the Root is Restored**

  When the PCC initiated PCEP session with the Root is back up, the following events occur:

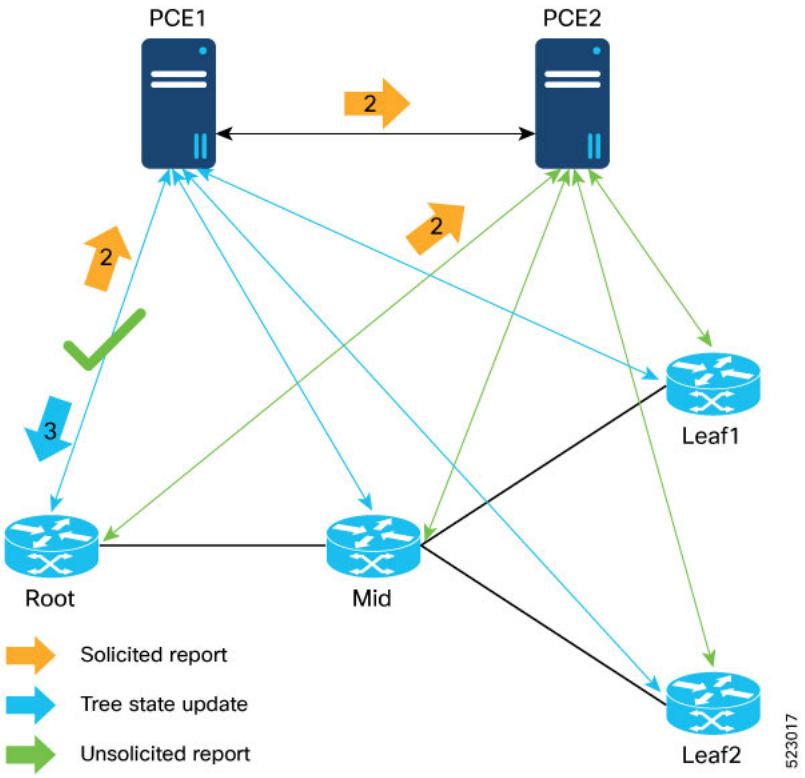


1. PCEP session from the Root to PCE1 is restored.
2. Root redelegates to PCE1 immediately after the delegation timer expires:
   - Sends the PCReport to PCE1 with **D-bit** set to **1**
   - Sends the PCReport to PCE2 with **D-bit** set to **0**
3. PCE1 reclaims the responsibility of the compute PCE, recomputes Tree, and sends the PCUpdate.

- **PCC Initiated - PCEP session with Mid or Leaf node is Down**

  When the PCC initiated PCEP session with the Mid or Leaf node is down, the following events occur:

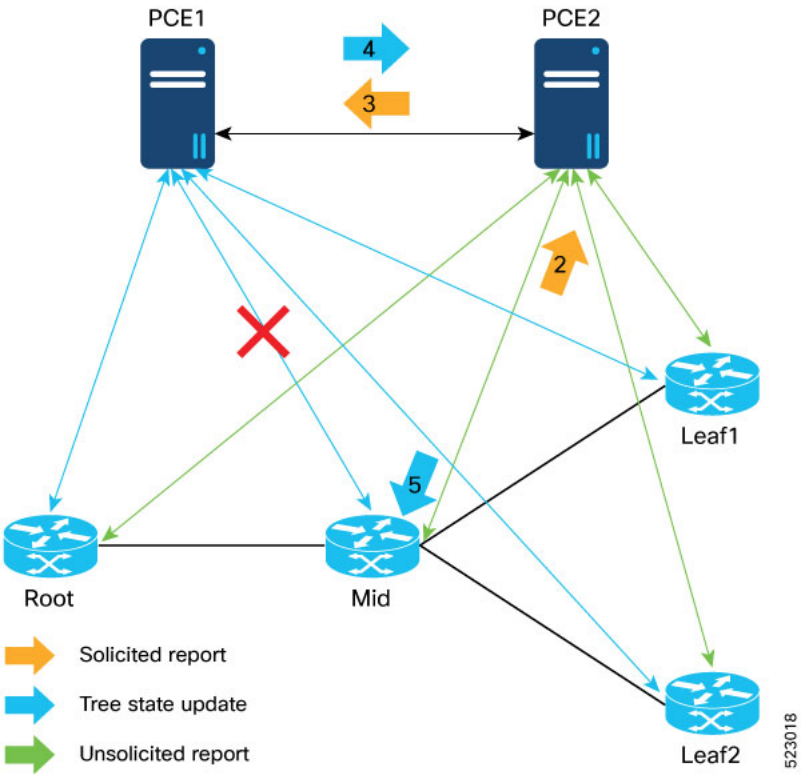


1. PCEP session from Mid to PCE1 is down but the Root and Leaf node still has session to PCE1
   - PCE1 is still responsible for Tree compute.
   - PCE1 holds LSP state for Mid for sometime to allow redelegation and Report from PCE2 (60 seconds Tree-SID Peer Down Timer on PCE).
2. With PCC-Centric approach, Mid redelegates immediately to PCE2 and sends a PCReport with **D-bit** set to **1**.
3. PCE2 forwards PCReport to PCE1.
4. PCE1 sends PCUpdate to PCE2 for Mid immediately.
5. PCE2 always forwards the PCUpdate to Mid (PCC) if the PCE2 still has delegation of LSP from the PCC.

**Note** A node, which does not have PCEP session is considered for P2PM path compute for new Tree.

In this example, a new Tree from the Root to the same set of Leaf nodes cannot be brought up because PCE1 does not have a PCEP session to the Mid node.

- **PCC Initiated - PCEP session with Mid or Leaf node is Restored**

  When the PCC initiated PCEP session with the Mid or Leaf node is restored, the following events occur:

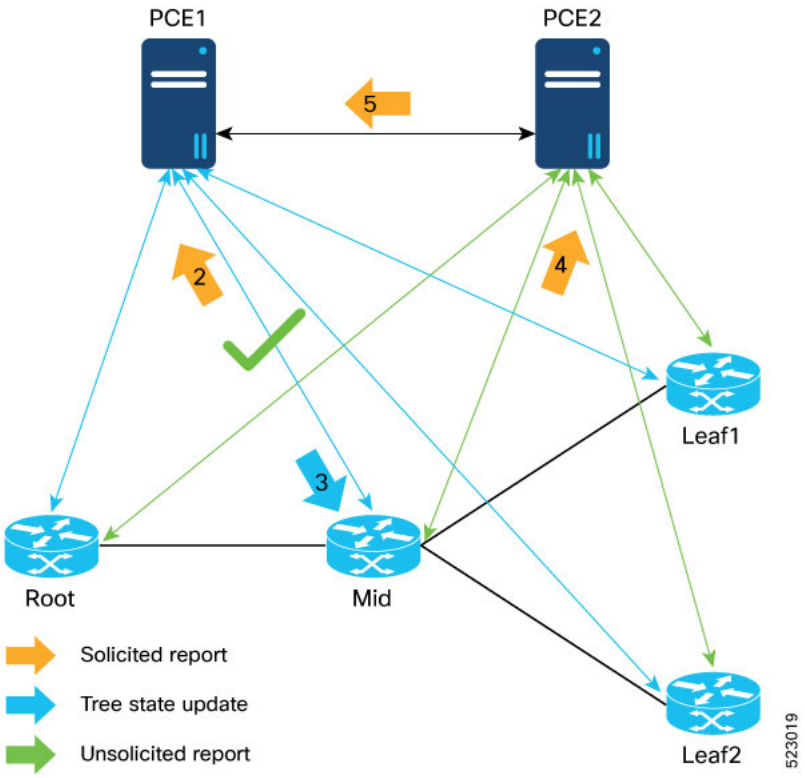


1. PCEP session from Mid to PCE1 is restored.
   - Root and Leaf node still have the session to PCE1.
   - PCE1 is still responsible for path compute.
2. With PCC-centric approach, Mid node redelegates to PCE1 after the delegation timer expires.
   - Sends a PCReport with **D-bit** set to **1**.
3. PCE1 sends PCUpdate to Mid node.
4. Mid node sends a PCReport to PCE2 with **D-bit** set to **0**.
5. PCE2 withdraws "Interest" from PCE1.

**Note** Even after the session between PCE1 and Mid node is restored, PCE1 keeps pushing updates to PCE2 until the "interest" from LSP is withdrawn. The PCE to which the LSP is delegated push the update down to PCC.

It is possible that both OCEs have the **D-bit** set for the LSP momentarily. In such a case, both PCEs will push down the Updates. The PCC accepts the update from the PCE to which it has delegated to.

- **PCC Initiated - Existing Tree Change with Split PCEP Session**

When there is a PCC Initiated - Existing Tree Change with Split PCEP Session, the following events occur:

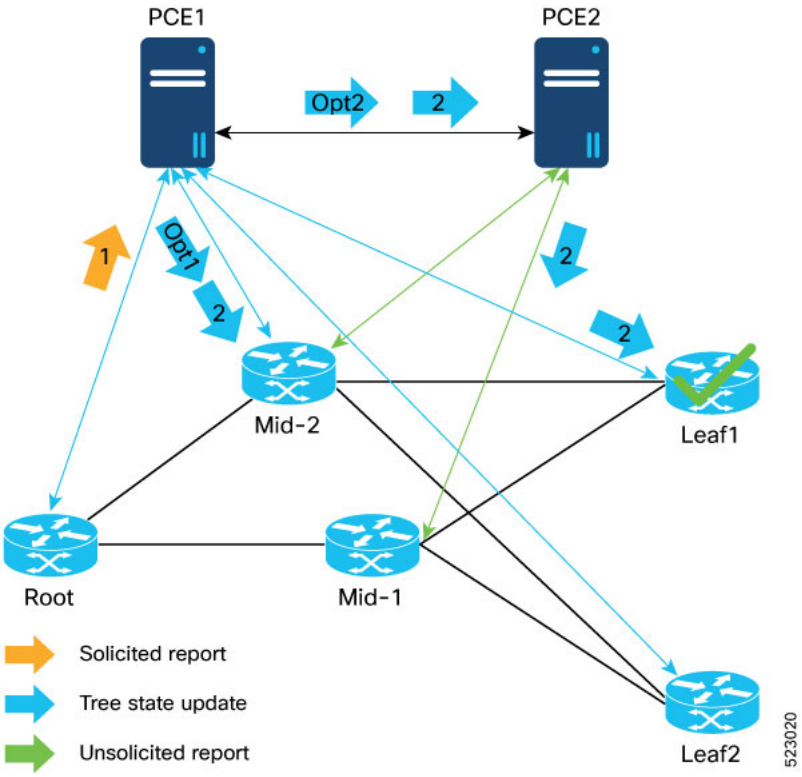


Root and Leaf node have PCEP session with PCE1 and the Mid-1 node has PCEP session restored and hence delegated to PCE2. The new mid node (Mid2) is introduced with PCEP sessions to both PCEs.

1. Root updates Tree to add Leaf1
   - Sends PCReport to PCE1 with **D-bit**set
2. PCE1 computes Tree
   - **Option 1:** PCE1 will not consider Mid-1 node because it does not have a direct PCEP session to it.
     - Sends PCInitiate to Mid-2 and Leaf1 node PCCs
     - **Cons:** This may not be the best path to Endpoint. The path to a given Endpoint may be different if it gets deleted and re-added.
   - **Option 2 (Preferred):** PCE1 will consider reachability through Mid-1 node because it knows Mid-1 node is part of the Tree and delegated to PCE2 (Over State-Sync channel)
     - Sends PCUpdate to Mid-1 node through PCE2

- **PCC Initiated - New Tree with Split PCEP Session**

  When there is a PCC Initiated - New Tree Change with Split PCEP Session, the following events occur:

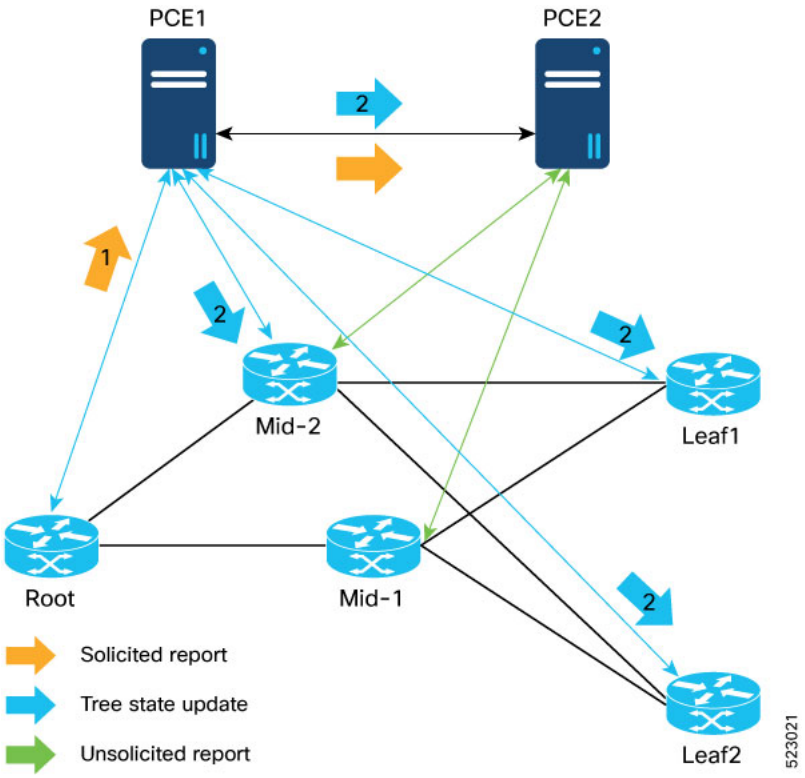


Root, Mid-2, and Leaf nodes have PCEP session with PCE1 and the Mid-1 node has PCEP session UP with PCE2.

1. Root creates a new Tree to Leaf1 and Leaf2
   - Sends PCReport to PCE1 with **D-bit** set
2. PCE1 computes Tree
   - PCE1 will not consider Mid-1 node because it does not have a direct PCEP session to it
   - Sends PCInitiate to Mid-2 and Leaf node PCCs

**Note** Con: Another (Existing) tree to the same Endpoints may be programmed through Mid-1 node.

# Limitations and Guidelines

Thi section lists the limitation and guidelines:

- The IOS-XR forwarding devices and the SR-PCE must be upgraded to IOSXR 7.8.1 release to enable this feature in the network.
- No support for PCE HA support for CLI-configured static TreeSID.

# Configuration Steps

Captured below are the configuration steps required to set up the TreeSID PCE HA feature.

1. **Configuration on forwarding device**

   This section guides you to configure the forwarding device.

   a. **PCE configuration on a PCC**

   The following configuration is required on the PCC routers to configure the PCE's that will provide the redundancy.

```
Router(config)# segment-routing
Router(config-sr)# traffic-eng
Router(config-sr-te)# pcc
Router(config-pcc)# pce address ipv4 2.2.2.1
Router(config-pcc)# precedence 200
Router(config-pcc)# pce-group pce-ha-group
Router(config-sr-te-pce)# pce address ipv4 4.4.4.2
Router(config-pce)# precedence 0
Router(config-pce)# pce-group pce-ha-group
```

**Note** To elect a Compute PCE, you must set the precedence. In the example above there are 2 PCEs configured with 200 and 0. The PCE with a lower precedence takes up the compute role.

   b. **Recommended steps for costing in a new SR-PCE in the network**

   If the network needs to be upgraded with a new SR-PCE, the operators can add the new SR-PCE as a more preferred PCE in the above configuration on the root of the SR-P2MP tree. Doing so results in the PCC re-delegating all the SR-P2MP LSPs to the newly configured SR-PCE. This delegation allows the new SR-PCE to assume the role of computation for the SR-P2MP trees. The older SR-PCE can be costed out of the network. Following these steps will allow the transition from one SR-PCE to another.

   c. **TreeSID with PCE groups**

   - **Associating a PCE with a PCE group:** A PCE can be associated to a PCE group using the below configuration. It must be noted that a PCE can only be associated to one PCE group

```
Router(config)# segment-routing traffic-eng
Router(config-sr-te)# pcc
Router(config-pcc-pce)# pce address ipv4 192.168.0.5
Router(config-pcc-pce)# pce-group test
```

   - **Associating a PCE group with on-demand color:** With a PCE now associated with a PCE group, the PCE group can be associated with an on-demand color (which you later associate with a P2MP policy) using the following configuration.

**Note** Note: While the same PCE group can be used across many on-demand colors, there can only be one PCE group associated with one on-demand color configuration.

```
Router(config)# segment-routing traffic-eng
Router(config-sr-te-color)on-demand color 10
Router(config-sr-te-color)pce-group test
```

- **Associating a dynamic MVPN policy with color:** A dynamic SR P2MP policy is associated with an on-demand color, which provides an abstraction to the constraints or metrics that the policy must satisfy. The same structure will be used to associate a PCE group to the dynamic SR P2MP policy.

```
Default TreeSID
Router(config)# vrf vpn1
Router(config-vrf)# address-family ipv4
Router(config-vrf-af)# bgp auto-discovery segment-routing
Router(config-vrf-af)# mdt default segment-routing mpls color 10
Router(config-vrf-af)# mdt data segment-routing mpls 10 route-policy treesid
threshold 0

Router(config)# route-policy treesid
Router(config)# set on-demand-color 20
Router(config)# end-policy

Partitioned TreeSID
Router(config)# vrf vpn2
Router(config-vrf)# address-family ipv4
Router(config-vrf-af)# bgp auto-discovery segment-routing
Router(config-vrf-af)# mdt partitioned segment-routing mpls color 10
```

2. **Configuration on SR-PCE**

**Note** **PCE state-sync configuration:** The following configuration must be done on all PCEs participating in PCE state-sync. Configuring it on only one PCE will only enable that PCE to sync state uni-directionally.

```
Router(config)# pce state-sync ipv4 192.168.0.6
```

### Running Configuration

Run the show command to review the running configuration:

```
pce
====
 address ipv4 192.168.0.5
 api
  user admin
   password encrypted 094D4A04100B464058
  !
  authentication basic
```

```
 !
 state-sync ipv4 192.168.0.6
 segment-routing
  traffic-eng
   p2mp
    timers reoptimization 60
    frr-node-set from
     ipv4 192.168.0.2
    !
    frr-node-set to
     ipv4 192.168.0.1
     ipv4 192.168.0.3
    !
    label-range min 18000 max 19000
    multipath-disable
   !
   affinity bit-map
    red 1
    blue 3
    black 31
    green 2
   !
  !
 !
!
PCC
====
segment-routing
 traffic-eng
  pcc
   pce address ipv4 192.168.0.5
   !
   pce address ipv4 192.168.0.6
   !
   redundancy pcc-centric
   timers initiated state 60
   timers initiated orphan 30
  !
 !
!
```

### Verification

Run the following show commands to verify if the PCE compute role is set:

- This is an example of the command run on a Compute SR-PCE:

```
Router# Show pce lsp ipv4 p2mp
Tree: sr_p2mp_root_192.168.0.4_tree_id_524289, Root: 192.168.0.4 ID: 524289
 PCC: 192.168.0.4
 Label:    19000
 Operational: up  Admin: up  Compute: Yes
 Local LFA FRR: Disabled
 Metric Type: IGP
 Transition count: 1
 Uptime: 00:21:37 (since Fri Mar 11 18:36:06 PST 2022)
 Destinations: 192.168.0.1, 192.168.0.3
 Nodes:
  Node[0]: 192.168.0.2+ (rtrM)
   Delegation: PCC
   PLSP-ID: 1
   Role: Transit
```

```
    State Changes: 0x2 (New Hops)
    Endpoints: 192.168.0.3 192.168.0.1
    Hops:
     Incoming: 19000 CC-ID: 1
     Outgoing: 19000 CC-ID: 1 (13.13.13.3) [rtrL2:192.168.0.3]
       Endpoints: 192.168.0.3
     Outgoing: 19000 CC-ID: 1 (10.10.10.1) [rtrL1:192.168.0.1]
       Endpoints: 192.168.0.1
  Node[1]: 192.168.0.4 (rtrR)
    Delegation: PCC
    Locally computed
    PLSP-ID: 1
    Role: Ingress
    Endpoints: 192.168.0.3 192.168.0.1
    Hops:
     Incoming: 19000 CC-ID: 2
     Outgoing: 19000 CC-ID: 2 (16.16.16.2) [rtrM:192.168.0.2]
       Endpoints: 192.168.0.3 192.168.0.1
  Node[2]: 192.168.0.3 (rtrL2)
    Delegation: PCC
    Locally computed
    PLSP-ID: 1
    Role: Egress
    Hops:
     Incoming: 19000 CC-ID: 4
Node[3]: 192.168.0.1+ (rtrL1)
    Delegation: PCC
    Locally computed
    PLSP-ID: 2
    Role: Egress
    State Changes: 0x7 (New Node,New Hops,Role Change)
    Hops:
     Incoming: 19000 CC-ID: 5


Event history (latest first):
  Time                    Event
  Mar 11 18:57:12.522    Received report from all nodes awaiting report, state: Pruning
 stale legs on non-root nodes
  Mar 11 18:57:12.522    No nodes awaiting report, state: Pruning stale legs on non-root
 nodes
  Mar 11 18:57:12.522     Received report from all nodes awaiting report, state:
Programming the root node
  Mar 11 18:57:12.522     No nodes awaiting report, state: Programming the root node
  Mar 11 18:57:12.522     Received report from all nodes awaiting report, state:
Programming non-root nodes
  Mar 11 18:57:12.512     Node 192.168.0.1 delegated by PCC
  Mar 11 18:57:12.473     Path computation returned a different result, signaling new
path
  Mar 11 18:57:12.473    Received report from all nodes awaiting report, state: Pruning
 stale legs on non-root nodes
  Mar 11 18:57:12.472     TreeSID Leaf set changed
  Mar 11 18:51:10.146     Node 192.168.0.1 undelegated by PCC
  Mar 11 18:51:10.080     Received report from all nodes awaiting report, state:
Programming the root node
  Mar 11 18:51:10.080     No nodes awaiting report, state: Programming the root node
  Mar 11 18:51:10.080     Received report from all nodes awaiting report, state:
Programming non-root nodes
  Mar 11 18:51:10.080     No nodes awaiting report, state: Programming non-root nodes
  Mar 11 18:51:10.080     Path computation returned a different result, signaling new
path
  Mar 11 18:51:10.080     Received report from all nodes awaiting report, state: None
  Mar 11 18:51:10.080     TreeSID Leaf set changed
  Mar 11 18:36:06.813    Received report from all nodes awaiting report, state: Pruning
```

```
 stale legs on non-root nodes
  Mar 11 18:36:06.813    No nodes awaiting report, state: Pruning stale legs on non-root
 nodes
  Mar 11 18:36:06.813     Received report from all nodes awaiting report, state:
Programming the root node
  Mar 11 18:36:06.813     No nodes awaiting report, state: Programming the root node
  Mar 11 18:36:06.813     Received report from all nodes awaiting report, state:
Programming non-root nodes
  Mar 11 18:36:06.552     Node 192.168.0.3 delegated by PCC
  Mar 11 18:36:06.534     Path computation returned a different result, signaling new
path
  Mar 11 18:36:06.534    Received report from all nodes awaiting report, state: Pruning
 stale legs on non-root nodes
  Mar 11 18:36:06.534    No nodes awaiting report, state: Pruning stale legs on non-root
 nodes
  Mar 11 18:36:06.534     Operational state changed to up (0 transitions)
  Mar 11 18:36:06.534     Received report from all nodes awaiting report, state:
Programming the root node
  Mar 11 18:36:06.323     Node 192.168.0.4 delegated by PCC
  Mar 11 18:36:06.323     TreeSID Leaf set changed
  Mar 11 18:36:06.316     Received report from all nodes awaiting report, state:
Programming non-root nodes
  Mar 11 18:36:06.316     Node 192.168.0.1 delegated by PCC
  Mar 11 18:36:06.298     Node 192.168.0.2 delegated by PCC
  Mar 11 18:36:06.249     PCE compute role set
  Mar 11 18:36:06.249     TreeSID metric type changed to 0
  Mar 11 18:36:06.249     TreeSID Leaf set changed
  Mar 11 18:36:06.249     TreeSID created
```

- This is an example of the command run on a Non-Compute SR-PCE:

```
Router# Show pce lsp ipv4 p2mp
Tree: sr_p2mp_root_192.168.0.4_tree_id_524289, Root: 192.168.0.4 ID: 524289
 PCC: 192.168.0.4
 Label:    19000
 Operational: standby  Admin: up  Compute: No
 Local LFA FRR: Enabled
 Metric Type: IGP
 Transition count: 0
 Destinations: 192.168.0.1, 192.168.0.3
 Nodes:
  Node[0]: 192.168.0.4+ (rtrR)
   Delegation: PCE 192.168.0.5
   PLSP-ID: 1
   Role: None
   State Changes: 0x3 (New Node,New Hops)
   Hops:
    Incoming: 19000 CC-ID: 2
    Outgoing: 19000 CC-ID: 2 (16.16.16.2)
  Node[1]: 192.168.0.2+ (rtrM)
   Delegation: PCE 192.168.0.5
   PLSP-ID: 1
   Role: None
   State Changes: 0x3 (New Node,New Hops)
   Hops:
    Incoming: 19000 CC-ID: 1
    Outgoing: 19000 CC-ID: 1 (13.13.13.3)
    Outgoing: 19000 CC-ID: 1 (10.10.10.1)
  Node[2]: 192.168.0.3+ (rtrL2)
   Delegation: PCE 192.168.0.5
   PLSP-ID: 1
   Role: None
   State Changes: 0x3 (New Node,New Hops)
   Hops:
```

```
    Incoming: 19000 CC-ID: 4
  Node[3]: 192.168.0.1+ (rtrL1)
   Delegation: PCE 192.168.0.5
   PLSP-ID: 2
   Role: None
   State Changes: 0x3 (New Node,New Hops)
   Hops:
    Incoming: 19000 CC-ID: 5

 Event history (latest first):
  Time                    Event
  Mar 11 18:57:12.688     Node 192.168.0.1 delegated by PCE 192.168.0.5
  Mar 11 18:57:12.485     TreeSID Leaf set changed
  Mar 11 18:51:10.082     TreeSID Leaf set changed
  Mar 11 18:36:06.713     Node 192.168.0.3 delegated by PCE 192.168.0.5
  Mar 11 18:36:06.499     TreeSID Leaf set changed
  Mar 11 18:36:06.499     Node 192.168.0.1 delegated by PCE 192.168.0.5
  Mar 11 18:36:06.499     Node 192.168.0.2 delegated by PCE 192.168.0.5
  Mar 11 18:36:06.291     Node 192.168.0.4 delegated by PCE 192.168.0.5
  Mar 11 18:36:06.291     TreeSID metric type changed to 0
  Mar 11 18:36:06.291     TreeSID Leaf set changed
  Mar 11 18:36:06.291     TreeSID created
```

- This is an example of the show command to verify the policy information in PCC:

```
Router# show segment-routing traffic-eng p2mp
Policy: sr_p2mp_root_192.168.0.4_tree_id_524290  LSM-ID: 0x40002
 Root: 192.168.0.4, ID: 524290
 PCE stale timer: Running  Start: Dec 31 16:22:06.847
 PCE Group: NULL
 PCC info:
     Symbolic name: sr_p2mp_root_192.168.0.4_tree_id_524290
     Creator PCE: 192.168.0.5
     Delegator PCE: 192.168.0.5
     PLSP-ID: 2
     Is orphan: no
     State timer:
       Running: no
 Delegated Connection: 192.168.0.5
 Creator Connnection: 192.168.0.5
 Role: Transit
 Tree label: Unlabelled
 Head LSM-ID label: Unlabelled
 Replication:
  Event history (latest first):
   Time                    Event
   Jan 25 15:57:20.848     Updated delegator addr: 192.168.0.5 in pcc_info
  Jan 25 15:39:34.019     Forwarding updated: LBL RW ADD LBL: 18999 TBL-ID: 0xe0000000
 flags: 0x0 LSM-ID: 0x40002 || OUTINFO ADD LBL: 18999 -> 18999 IFH: 0x0 addr: 192.168.0.1
 || LMRIB FLUSH
   Jan 25 15:39:34.019     TreeSID created
```

CHAPTER 13

# Enabling Segment Routing Flexible Algorithm

Segment Routing Flexible Algorithm allows operators to customize IGP shortest path computation according to their own needs. An operator can assign custom SR prefix-SIDs to realize forwarding beyond link-cost-based SPF. As a result, Flexible Algorithm provides a traffic engineered path automatically computed by the IGP to any destination reachable by the IGP.

The SR architecture associates prefix-SIDs to an algorithm which defines how the path is computed. Flexible Algorithm allows for user-defined algorithms where the IGP computes paths based on a user-defined combination of metric type and constraint.

This document describes the IS-IS and OSPF extensions to support Segment Routing Flexible Algorithm on an MPLS data-plane.


- Prerequisites for Flexible Algorithm, on page 449
- Building Blocks of Segment Routing Flexible Algorithm, on page 449
- Configuring Flexible Algorithm, on page 456
- Example: Configuring IS-IS Flexible Algorithm, on page 466
- Example: Configuring OSPF Flexible Algorithm, on page 467
- Example: Traffic Steering to Flexible Algorithm Paths, on page 468


# Prerequisites for Flexible Algorithm

Segment routing must be enabled on the router before the Flexible Algorithm functionality is activated.

# Building Blocks of Segment Routing Flexible Algorithm

This section describes the building blocks that are required to support the SR Flexible Algorithm functionality in IS-IS and OSPF.

## Flexible Algorithm Definition

Many possible constraints may be used to compute a path over a network. Some networks are deployed with multiple planes. A simple form of constraint may be to use a particular plane. A more sophisticated form of constraint can include some extended metric, like delay, as described in [RFC7810]. Even more advanced case could be to restrict the path and avoid links with certain affinities. Combinations of these are also possible. To provide a maximum flexibility, the mapping between the algorithm value and its meaning can be defined

by the user. When all the routers in the domain have the common understanding what the particular algorithm value represents, the computation for such algorithm is consistent and the traffic is not subject to looping. Here, since the meaning of the algorithm is not defined by any standard, but is defined by the user, it is called a Flexible Algorithm.

# Flexible Algorithm Membership

An algorithm defines how the best path is computed by IGP. Routers advertise the support for the algorithm as a node capability. Prefix-SIDs are also advertised with an algorithm value and are tightly coupled with the algorithm itself.

An algorithm is a one octet value. Values from 128 to 255 are reserved for user defined values and are used for Flexible Algorithm representation.

# Flexible Algorithm Definition Advertisement

To guarantee the loop free forwarding for paths computed for a particular Flexible Algorithm, all routers in the network must share the same definition of the Flexible Algorithm. This is achieved by dedicated router(s) advertising the definition of each Flexible Algorithm. Such advertisement is associated with the priority to make sure that all routers will agree on a single and consistent definition for each Flexible Algorithm.

Definition of Flexible Algorithm includes:

- Metric type
- Affinity constraints
- Exclude SRLG constraint

To enable the router to advertise the definition for the particular Flexible Algorithm, **advertise-definition** command is used. At least one router in the area, preferably two for redundancy, must advertise the Flexible Algorithm definition. Without the valid definition being advertised, the Flexible Algorithm will not be functional.

# Flexible Algorithm Link Attribute Advertisement

Various link attributes may be used during the Flexible Algorithm path calculation. For example, include or exclude rules based on link affinities can be part of the Flexible Algorithm definition, as defined in IETF draft draft-ietf-lsr-flex-algo.

Link attribute advertisements used during Flexible Algorithm calculation must use the Application-Specific Link Attribute (ASLA) advertisements, as defined in RFC8919 (IS-IS) and RFC8920 (OSPF). In the case of IS-IS, if the L-Flag is set in the ASLA advertisement, then legacy advertisements (IS-IS Extended Reachability TLV) are used instead.

The mandatory use of ASLA advertisements applies to the following link attributes:

- Minimum Unidirectional Link Delay
- TE Default Metric
- Administrative Group
- Extended Administrative Group

- Shared Risk Link Group

# Flexible Algorithm Prefix-SID Advertisement

To be able to forward traffic on a Flexible Algorithm specific path, all routers participating in the Flexible Algorithm will install a MPLS labeled path for the Flexible Algorithm specific SID that is advertised for the prefix. Only prefixes for which the Flexible Algorithm specific Prefix-SID is advertised is subject to Flexible Algorithm specific forwarding.

# Calculation of Flexible Algorithm Path

*Table 48: Feature History Table*

| Feature Name | Release Information | Feature Description |
|---|---|---|
| OSPF: Microloop Avoidance for Flexible Algorithm | Release 7.4.1 | This feature extends the current OSPF Flexible Algorithm functionality to support Microloop Avoidance. |

*Table 49: Feature History Table*

| Feature Name | Release Information | Feature Description |
|---|---|---|
| OSPF: Microloop Avoidance for Flexible Algorithm | Release 7.3.2 | This feature extends the current OSPF Flexible Algorithm functionality to support Microloop Avoidance. |
| OSPF: TI-LFA for Flexible Algorithm | Release 7.3.1 | This feature extends the current OSPF Flexible Algorithm functionality to support TI-LFA. |

A router may compute path for multiple Flexible Algorithms. A router must be configured to support particular Flexible Algorithm before it can compute any path for such Flexible Algorithm. A router must have a valid definition of the Flexible Algorithm before Flexible Algorithm is used.

The router uses the following rules to prune links from the topology during the Flexible Algorithm computation:

- All nodes that don't advertise support for Flexible Algorithm are pruned from the topology.
- Affinities:
  - Check if any exclude affinity rule is part of the Flexible Algorithm Definition. If such exclude rule exists, check if any color that is part of the exclude rule is also set on the link. If such a color is set, the link must be pruned from the computation.
  - Check if any include-any affinity rule is part of the Flexible Algorithm Definition. If such include-any rule exists, check if any color that is part of the include-any rule is also set on the link. If no such color is set, the link must be pruned from the computation.

- Check if any include-all affinity rule is part of the Flexible Algorithm Definition. If such include-all rule exists, check if all colors that are part of the include-all rule are also set on the link. If all such colors are not set on the link, the link must be pruned from the computation

**Note** See Flexible Algorithm Affinity Constraint.

- If the Flexible Algorithm definition includes an "exclude SRLG" rule, then all links that are part of such SRLG are pruned from the topology.

**Note** See Flexible Algorithm with Exclude SRLG Constraint, on page 462.

- Router uses the metric that is part of the Flexible Algorithm definition. If the metric isn't advertised for the particular link, the link is pruned from the topology.

Loop Free Alternate (LFA) paths, TI-LFA backup paths, and Microloop Avoidance paths for particular Flexible Algorithm are computed using the same constraints as the calculation of the primary paths for such Flexible Algorithm. These paths use Prefix-SIDs advertised specifically for such Flexible Algorithm in order to enforce a backup or microloop avoidance path.

### Configuring Microloop Avoidance for Flexible Algorithm

By default, Microloop Avoidance per Flexible Algorithm instance follows Microloop Avoidance configuration for algo-0. For information about configuring Microloop Avoidance, see Configure Segment Routing Microloop Avoidance, on page 577.

You can disable Microloop Avoidance for Flexible Algorithm using the following commands:

```
router isis instance flex-algo algo microloop avoidance disable

router ospf process flex-algo algo microloop avoidance disable
```

### Configuring LFA / TI-LFA for Flexible Algorithm

By default, LFA/TI-LFA per Flexible Algorithm instance follows LFA/TI-LFA configuration for algo-0. For information about configuring TI-LFA, see Configure Topology-Independent Loop-Free Alternate (TI-LFA), on page 553.

You can disable TI-LFA for Flexible Algorithm using the following commands:

```
router isis instance flex-algo algo fast-reroute disable

router ospf process flex-algo algo fast-reroute disable
```

## Installation of Forwarding Entries for Flexible Algorithm Paths

Flexible Algorithm path to any prefix must be installed in the forwarding using the Prefix-SID that was advertised for such Flexible Algorithm. If the Prefix-SID for Flexible Algorithm is not known, such Flexible Algorithm path is not installed in forwarding for such prefix..

Only MPLS to MPLS entries are installed for a Flexible Algorithm path. No IP to IP or IP to MPLS entries are installed. These follow the native IPG paths computed based on the default algorithm and regular IGP metrics.

# Flexible Algorithm Prefix-SID Redistribution

*Table 50: Feature History Table*

| Feature Name | Release Information | Feature Description |
|---|---|---|
| Flexible Algorithm Prefix-SID Redistribution for External Route Propagation | Release 7.5.2 | You can now propagate flexible algorithm prefix-SIDs and their algorithm-specific metric between different IGP domains, such as OSPF to IS-IS RIP to OSPF. With this functionality enabling interdomain traffic engineering, you can export flexible algorithm labels from the OSPF domain to other domains and import the labels from other domains into OSPF.<br>The **show ospf route flex-algo** command has been modified to include additional attributes to indicate the external routes. |

Prefix redistribution from IS-IS to another IS-IS instance or protocol was limited to SR algorithm 0 (regular SPF) prefix SIDs; SR algorithm 1 (Strict SPF) and SR algorithms 128-255 (Flexible Algorithm) prefix SIDs were not redistributed along with the prefix. The Segment Routing IS-IS Flexible Algorithm Prefix SID Redistribution feature allows redistribution of strict and flexible algorithms prefix SIDs from IS-IS to another IS-IS instance or protocols. This feature is enabled automatically when you configure redistribution of IS-IS Routes with strict or flexible algorithm SIDs.

Prefix redistribution from OSPF to another AS was limited to SR algorithm 0 (regular SPF) prefix SIDs; SR algorithm 1 (Strict SPF) and SR algorithms 128-255 (Flexible Algorithm) prefix SIDs were not redistributed along with the prefix. Starting from Cisco IOS XR Release 7.5.2, the Flexible Algorithm Prefix-SID Redistribution for External Route Propagation feature allows redistribution of strict and flexible algorithm prefixes SIDs from OSPF to another AS and also from another AS into OSPF.

### Configuration Example

The following example shows how to configure redistribute and flexible algorithm to enable external routes.

```
RP/0/RP0/CPU0:ios(config)#router ospf 1
RP/0/RP0/CPU0:ios(config-ospf)#segment-routing mpls
RP/0/RP0/CPU0:ios(config-ospf)#segment-routing forwarding mpls
RP/0/RP0/CPU0:ios(config-ospf)#redistribute isis 2 route-policy loopback-type
RP/0/RP0/CPU0:ios(config-ospf)#flex-algo 240
RP/0/RP0/CPU0:ios(config-ospf-flex-algo)#metric-type delay
RP/0/RP0/CPU0:ios(config-ospf-flex-algo)#prefix-metric
RP/0/RP0/CPU0:ios(config-ospf-flex-algo)#advertise-definition
```

### Verification

This following show output displays the route-type as 'Extern' for the external routes.

```
Router#show ospf routes flex-algo 240 route-type external detail
Route Table of ospf-1 with router ID 192.168.0.2 (VRF default)

  Algorithm 240

  Route entry for 192.168.4.3/32, Metric 220, SID 536, Label 16536
   Priority : Medium

     Route type : Extern Type 1
Last updated : Apr 25 14:30:12.718
     Flags: Inuse

     Prefix Contrib Algo 240 SID 536
      From 192.168.0.4 Route-type 5
      Total Metric : 220 Base metric 20 FAPM 20
      Contrib Flags : Inuse, Reachable
      SID Flags : PHP off, Index, Global, Valid

      Path: 10.1.1.3, from 192.168.0.4, via GigabitEthernet0/2/0/2
       Out Label  : 16536
       Weight     : 0
       Area       : 0

      Path: 10.1.2.3, from 192.168.0.4, via GigabitEthernet0/2/0/3
       Out Label  : 16536
       Weight     : 0
       Area       : 0

      Path: 10.2.1.5, from 192.168.0.4, via GigabitEthernet0/2/0/4
       Out Label  : 16536
       Weight     : 0
       Area       : 0

  Route entry for 192.168.4.5/32, Metric 120, SID 556, Label 16556
   Priority : Medium

     Route type : Extern Type 1
     Last updated : Apr 25 14:30:12.724
     Flags: Inuse

     Prefix Contrib Algo 240 SID 556
      From 192.168.0.3 Route-type 5
      Total Metric : 120 Base metric 1 FAPM 20
      Contrib Flags : Inuse, Reachable
      SID Flags : PHP off, Index, Global, Valid

      Path: 10.1.1.3, from 192.168.0.3, via GigabitEthernet0/2/0/2
       Out Label  : 16556
       Weight     : 0
       Area       : 0

      Path: 10.1.2.3, from 192.168.0.3, via GigabitEthernet0/2/0/3
       Out Label  : 16556
       Weight     : 0
       Area       : 0
```

The following show output displays label information for flexible algorithm and its corresponding metric as added in RIB:

```
RP/0/RP0/CPU0:ios# show route 192.168.0.2/32 detail
Wed Apr  6 16:24:46.021 IST

Routing entry for 192.168.0.2/32
  Known via "ospf 1", distance 110, metric 2, labeled SR, type intra area
  Installed Apr  6 15:51:57.973 for 00:32:48
  Routing Descriptor Blocks
    10.10.10.2, from 192.168.0.2, via GigabitEthernet0/2/0/0, Protected
      Route metric is 2
      Label: 0x3 (3)
      Tunnel ID: None
      Binding Label: None
      Extended communities count: 0
      Path id:1       Path ref count:0
      NHID:0x1(Ref:1)
      Backup path id:65
      OSPF area: 1
    10.11.11.2, from 192.168.0.2, via GigabitEthernet0/2/0/1, Backup (Local-LFA)
      Route metric is 6
      Label: 0x3 (3)
      Tunnel ID: None
      Binding Label: None
      Extended communities count: 0
      Path id:65              Path ref count:1
      NHID:0x2(Ref:1)
      OSPF area:
  Route version is 0x12 (18)
  Local Label: 0x3ee6 (16102)
  Local Label Algo Set (ID, Label, Metric): (1, 16202, 0),(128, 17282, 2)
  IP Precedence: Not Set
  QoS Group ID: Not Set
  Flow-tag: Not Set
  Fwd-class: Not Set
  Route Priority: RIB_PRIORITY_NON_RECURSIVE_MEDIUM (7) SVD Type RIB_SVD_TYPE_LOCAL
  Download Priority 1, Download Version 38
  No advertising protos.
```

# Flexible Algorithm Prefix Metric

*Table 51: Feature History Table*

| Feature Name | Release Information | Feature Description |
|---|---|---|
| Prefix Metric support for OSPF Flexible Algorithm | Release 7.5.1 | This feature extends the current OSPF Flexible Algorithm functionality to introduce a Flexible Algorithm-specific prefix-metric in the OSPF prefix advertisement. The prefix-metric provides a way to compute the best end-to-end Flexible Algorithm optimized paths across multiple areas or domains. |

A limitation of the existing Flexible Algorithm functionality in IS-IS and OSPF is the inability to compute the best path to a prefix in a remote area or remote IGP domain. Prefixes are advertised between IS-IS areas, OSPF processes, or between protocol domains, but the existing prefix metric does not reflect any of the constraints used for Flexible Algorithm path. Although the best Flexible Algorithm path can be computed to

the inter-area or redistributed prefix inside the area, the path may not represent the overall best path through multiple areas or IGP domains.

The Flexible Algorithm Prefix Metric feature introduces a Flexible Algorithm-specific prefix-metric in the IS-IS and OSPF prefix advertisement. The prefix-metric provides a way to compute the best end-to-end Flexible Algorithm optimized paths across multiple areas or domains.

**Note** The Flexible Algorithm definition must be consistent between domains or areas. Refer to section 8 and section 9 in IETF draft https://datatracker.ietf.org/doc/draft-ietf-lsr-flex-algo/.

# Configuring Flexible Algorithm

*Table 52: Feature History Table*

| Feature Name | Release Information | Feature Description |
|---|---|---|
| IS-IS Enhancements: max-metric and data plane updates | Release 7.8.1 | The new **anomaly** optional keyword is introduced to **affinity flex-algo** command. This keyword helps to advertise the flex-algo affinity when the performance measurement signals a link anomaly, such as an excessive delay on a link. You could use the anomaly option to exclude the link from flex-algo path computations.<br>affinity flex-algo |

*Table 53: Feature History Table*

| Feature Name | Release Information | Feature Description |
|---|---|---|
| TE Metric Support for IS-IS Flex Algo | Release 7.4.1 | Flexible Algorithm allows for user-defined algorithms where the IGP computes paths based on a user-defined combination of metric type (path optimization objective) and constraint.<br>This feature adds support for TE metric as a metric type for IS-IS Flexible Algorithm. This allows the TE metric, along with IGP and delay metrics, to be used when running shortest path computations. |

The following IS-IS and OSPF configuration sub-mode is used to configure Flexible Algorithm:

```
router isis instance flex-algo algo
```

```
router ospf process flex-algo algo
```

*algo*—value from 128 to 255

### Configuring Flexible Algorithm Definitions

The following commands are used to configure Flexible Algorithm definition under the flex-algo sub-mode:

- **router isis** *instance* **flex-algo** *algo* **metric-type** {**delay** | **te**}

  **router ospf** *process* **flex-algo** *algo* **metric-type** {**delay** | **te-metric**}

**Note** By default the IGP metric is used. If delay or TE metric is enabled, the advertised delay or TE metric on the link is used as a metric for Flexible Algorithm computation.

**Note** See Flexible Algorithm Link Attribute Advertisement Behavior, on page 459 for TE metric behaviors.

- **router isis** *instance* **flex-algo** *algo* **affinity** { **include-any** | **include-all** | **exclude-any**} *name1, name2, …*

  **router ospf** *process* **flex-algo** *algo* **affinity** { **include-any** | **include-all** | **exclude-any**} *name1, name2, …*

  *name*—name of the affinity map

- **router isis** *instance* **flex-algo** *algo* **priority** *priority value*

  **router ospf** *process* **flex-algo** *algo* **priority** *priority value*

  *priority value*—priority used during the Flexible Algorithm definition election.

The following command is used to to include the Flexible Algorithm prefix metric in the advertised Flexible Algorithm definition in IS-IS and OSPF :

```
router isis instance flex-algo algo prefix-metric
```

```
router ospf process flex-algo algo prefix-metric
```

The following command is used to enable advertisement of the Flexible Algorithm definition in IS-IS:

```
router isis instance flex-algo algo advertise-definition
```

### Configuring Affinity

The following command is used for defining the affinity-map. Affinity-map associates the name with the particular bit positions in the Extended Admin Group bitmask.

```
router isis instance flex-algo algo affinity-map name bit-position bit number

router ospf process flex-algo algo affinity-map name bit-position bit number
```

- *name*—name of the affinity-map.
- *bit number*—bit position in the Extended Admin Group bitmask.

With the IOS XR Release 7.8.1, the new optional keyword **anomaly** is introduced to the **interface** submode of **affinity flex-algo**. This keyword option helps to advertise flex-algo affinity on PM anomaly. The following command is used to associate the affinity with an interface:

```
router isis instance interface type interface-path-id affinity flex-algo anomaly name 1,
name 2, …

router ospf process area area interface type interface-path-id affinity flex-algo anomaly
name 1, name 2, …
```

*name*—name of the affinity-map

You can configure both normal and anomaly values. For the following example, the **blue** affinity is advertised. However, if a metric is received with the anomaly flag set, it will change to **red**:

```
Router# configure
Router(config)# router isis 1
Router(config-isis)#flex-algo 128
Router(config-isis-flex-algo)# interface GigabitEthernet0/0/0/2
Router(config-isis-flex-algo)# affinity flex-algo blue
Router(config-isis-flex-algo)# affinity flex-algo anomaly red
```

### Configuring Prefix-SID Advertisement

The following command is used to advertise prefix-SID for default and strict-SPF algorithm:

```
router isis instance interface type interface-path-id address-family {ipv4 | ipv6} [unicast]
 prefix-sid [strict-spf | algorithm algorithm-number]  [index | absolute] sid value

router ospf process area area interface Loopback interface-instance prefix-sid [strict-spf
 | algorithm algorithm-number]  [index | absolute] sid value
```

- *algorithm-number*—Flexible Algorithm number
- *sid value*—SID value

# Flexible Algorithm Link Attribute Advertisement Behavior

*Table 54: Feature History Table*

| Feature Name | Release Information | Feature Description |
|---|---|---|
| Advertisement of Link Attributes for IS-IS Flexible Algorithm | Release 7.4.1 | Link attribute advertisements used during Flexible Algorithm path calculation must use the Application-Specific Link Attribute (ASLA) advertisements, as defined in IETF draft draft-ietf-lsr-flex-algo.<br>This feature introduces support for ASLA advertisements during IS-IS Flexible Algorithm path calculation. |

The following tables explain the behaviors for advertising (transmitting) and processing (receiving) Flexible Algorithm link attributes.

*Table 55: OSPF*

| Link Attribute | Transmit | Receive |
|---|---|---|
| Link Delay Metric | IOS XR OSPF Flex Algo implementation advertises the link delay metric value using the OSPF ASLA sub-TLV with the F-bit set. | IOS XR OSPF only uses the link delay metric advertised in the ASLA sub-TLV for Flex Algo.<br>ASLA sub-TLV is supported with non-zero-length or with zero-length Application Identifier Bit Masks. |
| Link TE Metric | IOS XR OSPF Flex Algo implementation advertises the link TE metric value using the OSPF ASLA sub-TLV with the F-bit set.<br>The link TE metric values advertised are configured under SR-TE. | IOS XR OSPF only uses the TE metric advertised in the ASLA sub-TLV for Flex Algo.<br>ASLA sub-TLV is supported with non-zero-length or with zero-length Application Identifier Bit Masks. |

| Link Attribute | Transmit | Receive |
|---|---|---|
| Link Admin Group/Extended Admin Group | IOS XR OSPF Flex Algo implementation advertises the link admin group value using both link admin group (AG) and link extended admin group (EAG) encoding using the OSPF ASLA sub-TLV with the F-bit set.<br><br>The link admin group values advertised can be configured directly under the IGP and are therefore FA-specific. Otherwise, they will be derived from the link admin group values configured under SR-TE. | IOS XR OSPF only uses the AG/EAG (either one or both) advertised in the ASLA sub-TLV for Flex Algo.<br><br>ASLA sub-TLV is supported with non-zero-length or with zero-length Application Identifier Bit Masks. |

*Table 56: IS-IS*

| Link Attribute | Transmit | Receive |
|---|---|---|
| Link Delay Metric | IOS XR IS-IS Flex Algo implementation advertises the link delay metric value using **both** the IS-IS Extended Reachability TLV and the IS-IS ASLA. | By default, IOS XR IS-IS Flex Algo implementation prefers the link delay metric value received in the IS-IS ASLA. Otherwise, it will use link delay metric value received in the IS-IS Extended Reachability TLV.<br><br>ASLA sub-TLV is supported with non-zero-length or with zero-length Application Identifier Bit Masks.<br><br>If the incoming ASLA includes the L-Flag, implementation derives the link delay metric value from the IS-IS Extended Reachability TLV.<br><br>You can configure the IOS XR IS-IS Flex Algo implementation to strictly use the link delay metric value received in the IS-IS ASLA. See Strict IS-IS ASLA Link Attribute, on page 461. |
| Link TE Metric | IOS XR IS-IS Flex Algo implementation advertises the link TE metric value using the IS-IS ASLA.<br><br>The link TE metric values advertised can be configured directly under the IGP and are therefore FA-specific. Otherwise, they will be derived from the link TE metric values configured under SR-TE.<br><br>See Flexible Algorithm-Specific TE Metric, on page 461. | IOS XR IS-IS Flex Algo implementation processes the link TE metric value received in the IS-IS ASLA.<br><br>ASLA sub-TLV is supported with non-zero-length or with zero-length Application Identifier Bit Masks.<br><br>If incoming ASLA includes the L-Flag, implementation derives the link TE metric value from the IS-IS Extended Reachability TLV. |

| Link Attribute | Transmit | Receive |
|---|---|---|
| Link Admin Group/Extended Admin Group | IOS XR IS-IS Flex Algo implementation advertises the affinity value as both the link admin group (AG) TLV and the link extended admin group (EAG) TLV using the IS-IS ASLA when its value falls within the first 32 bits. Otherwise, the affinity value is advertised only as link EAG TLV using the IS-IS ASLA.<br>The admin group values advertised are configured directly under the IGP and are therefore FA-specific. | IOS XR IS-IS Flex Algo implementation processes the affinity value received as either the link admin group TLV or link extended admin group TLV in the IS-IS ASLA.<br>ASLA sub-TLV is supported with non-zero-length or with zero-length Application Identifier Bit Masks.<br>If incoming ASLA includes the L-Flag, implementation derives the affinity value from the IS-IS Extended Reachability TLV. |
| Link SRLG | IOS XR IS-IS LFA implementation advertises the link SRLG value in the IS-IS ASLA. | IOS XR IS-IS LFA implementation processes the link SRLG value received in the IS-IS ASLA.<br>If incoming ASLA includes the L-Flag, implementation derives the link SRLG value from the IS-IS Extended Reachability TLV. |

# Strict IS-IS ASLA Link Attribute

Use the following command to configure the IOS XR IS-IS Flex Algo implementation to strictly use the link delay metric value received in the IS-IS ASLA:

```
router isis instance-id receive application flex-algo delay app-only
```

# Flexible Algorithm-Specific TE Metric

Use the following command to configure the Flexible Algorithm-specific TE metric value under IS-IS, where *metric_value* is from 1 to 16777214:

- **router isis** *instance* **interface** *type interface-path-id* **address-family** { **ipv4** | **ipv6**} [**unicast**] **te-metric flex-algo** *metric_value* [**level** {**1** | **2**}]

The following example shows how to configure the IS-IS Flexible Algorithm-specific TE metric value to 50:

```
Router(config)# router isis 1
Router(config-isis)# interface HundredGigE 0/0/0/2
Router(config-isis-if)# address-family ipv4 unicast
Router(config-isis-if-af)# te-metric flex-algo 50
```

Use the following command to configure the Flexible Algorithm-specific TE metric value under OSPF, where *metric_value* is from 1 to 2147483647:

- **router ospf** *process-name* **area** *area* **interface** *type interface-path-id* **te-metric flex-algo** *metric_value*

The following example shows how to configure the OSPF Flexible Algorithm-specific TE metric value to 50:

```
Router(config)# router ospf 1
Router(config-ospf)# area 0
Router(config-ospf-ar)# interface HundredGigE 0/0/0/2
Router(config-ospf-ar-if# te-metric flex-algo 50
```

# Flexible Algorithm with Exclude SRLG Constraint

*Table 57: Feature History Table*

| Feature Name | Release Information | Feature Description |
|---|---|---|
| Flexible Algorithm to Exclude SRLGs for OSPF | Release 7.5.2 | You can now configure the flexible algorithm to exclude any link belonging to the Shared Risk Link Groups (SRLGs) from the path computation for OSPF. The ability to exclude the at-risk links ensures that the rest of the links in the network remain unaffected. |
| IS-IS Flexible Algorithm: Exclude-SRLG Constraint | Release 7.5.1 | This feature allows the Flexible Algorithm definition to specify Shared Risk Link Groups (SRLGs) that the operator wants to exclude during the Flex-Algorithm path computation. The ability to exclude the at-risk links ensures that the rest of the links in the network remain unaffected.<br>This allows the setup of disjoint paths between two or more Flex Algos by leveraging deployed SRLG configurations. |

This feature allows the Flexible Algorithm definition to specify Shared Risk Link Groups (SRLGs) that the operator wants to exclude during the Flex-Algorithm path computation. A set of links that share a resource whose failure can affect all links in the set constitute a SRLG. An SRLG provides an indication of which links in the network might be at risk from the same failure.

This allows the setup of disjoint paths between two or more Flex Algos by leveraging deployed SRLG configurations. For example, multiple Flex Algos could be defined by excluding all SRLGs except one. Each FA will prune the links belonging to the excluded SRLGs from its topology on which it computes its paths.

This provides a new alternative to creating disjoint paths with FA, in addition to leveraging FA with link admin group (affinity) constraints.

The Flexible Algorithm definition (FAD) can advertise SRLGs that you want to exclude during the Flexible Algorithm path computation. The IS-IS Flexible Algorithm Exclude SRLG Sub-TLV (FAESRLG) is used to

advertise the exclude rule that is used during the Flexible Algorithm path calculation, as specified in IETF draft https://datatracker.ietf.org/doc/draft-ietf-lsr-flex-algo/

The Flexible Algorithm path computation checks if an "exclude SRLG" rule is part of the FAD. If an "exclude SRLG" rule exists, it then checks if the link is part of an SRLG that is also part of the "exclude SRLG" rule. If the link is part of an excluded SRLG, the link is pruned from the path computation.

The figure below shows a topology configured with the following flex algos:

- Flex algo 128: metric IGP and exclude SRLG X constraint
- Flex algo 129: metric IGP and exclude SRLG Y constraint

The horizontal links between nodes 3 and 4 and between 2 and 5 are part of SRLG group X. The diagonal links between nodes 3 and 5 and between 2 and 4 are part of SRLG group Y. As a result, traffic from node 1 to node 6's FA 128 prefix SID (16806) avoids interfaces part of SRLG X. While traffic from node 1 to node 6's FA 129 prefix SID (16906) avoids interfaces part of SRLG Y.

**Note** See Constraints, on page 320 section in the *Configure SR-TE Policies* chapter for information about configuring SR policies with Flex-Algo constraints.

***Figure 30: Flex Algo with Exclude SRLG Constraint***

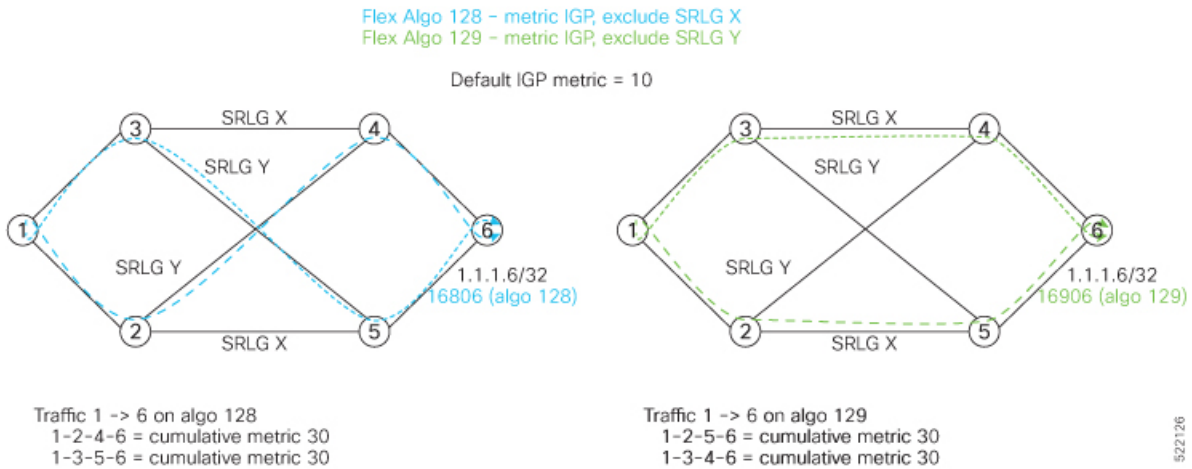


## Configuration

Use the **router isis** *instance* **address-family ipv4 unicast advertise application flex-algo link-attributes srlg** command to enable the Flexible Algorithm ASLA-specific advertisement of SRLGs.

Use the **router isis** *instance* **flex-algo** *algo* **srlg exclude-any** *srlg-name* . . . *srlg-name* command to configure the SRLG constraint which is advertised in the Flexible Algorithm definition (FAD) if the FAD advertisement is enabled under the flex-algo sub-mode. You can specify up to 32 SRLG names.

The SRLG configuration (value and port mapping) is performed under the global SRLG sub-mode. Refer to MPLS Traffic Engineering Shared Risk Link Groups for more information.

### Example

The following example shows how to enable the Flexible Algorithm ASLA-specific advertisement of SRLGs and to exclude SRLG groups from Flexible Algorithm path computation:

```
RP/0/RP0/CPU0:router(config)# srlg
RP/0/RP0/CPU0:router(config-srlg)# interface HunGigE0/0/0/0
RP/0/RP0/CPU0:router(config-srlg-if)# name groupX
RP/0/RP0/CPU0:router(config-srlg-if)# exit
RP/0/RP0/CPU0:router(config-srlg)# interface TenGigE0/0/0/1
RP/0/RP0/CPU0:router(config-srlg-if)# name groupX
RP/0/RP0/CPU0:router(config-srlg-if)# exit

RP/0/RP0/CPU0:router(config-srlg)# interface HunGigE0/0/1/0
RP/0/RP0/CPU0:router(config-srlg-if)# name groupY
RP/0/RP0/CPU0:router(config-srlg-if)# exit
RP/0/RP0/CPU0:router(config-srlg)# interface TenGigE0/0/1/1
RP/0/RP0/CPU0:router(config-srlg-if)# name groupY
RP/0/RP0/CPU0:router(config-srlg-if)# exit

RP/0/RP0/CPU0:router(config-srlg)# name groupX value 100
RP/0/RP0/CPU0:router(config-srlg)# name groupY value 200
RP/0/RP0/CPU0:router(config-srlg)# exit

RP/0/RP0/CPU0:router(config)# router isis 1
RP/0/RP0/CPU0:router(config-isis)# address-family ipv4 unicast
RP/0/RP0/CPU0:router(config-isis-af)# advertise application flex-algo link-attributes srlg
RP/0/RP0/CPU0:router(config-isis-af)# exit
RP/0/RP0/CPU0:router(config-isis)# flex-algo 128
RP/0/RP0/CPU0:router(config-isis-flex-algo)# advertise-definition
RP/0/RP0/CPU0:router(config-isis-flex-algo)# srlg exclude-any groupX
RP/0/RP0/CPU0:router(config-isis-flex-algo)# exit
RP/0/RP0/CPU0:router(config-isis)# flex-algo 129
RP/0/RP0/CPU0:router(config-isis-flex-algo)# advertise-definition
RP/0/RP0/CPU0:router(config-isis-flex-algo)# srlg exclude-any groupY
RP/0/RP0/CPU0:router(config-isis-flex-algo)# commit
RP/0/RP0/CPU0:router(config-isis-flex-algo)# exit
RP/0/RP0/CPU0:router(config-isis)#
```

The following example shows how to enable the Flexible Algorithm ASLA-specific advertisement of SRLGs and to exclude SRLG groups from Flexible Algorithm path computation for OSPF:

```
RP/0/RP0/CPU0:router(config)# srlg
RP/0/RP0/CPU0:router(config-srlg)# interface HunGigE0/0/0/0
RP/0/RP0/CPU0:router(config-srlg-if)# name groupX
RP/0/RP0/CPU0:router(config-srlg-if)# exit
RP/0/RP0/CPU0:router(config-srlg)# interface TenGigE0/0/0/1
RP/0/RP0/CPU0:router(config-srlg-if)# name groupX
RP/0/RP0/CPU0:router(config-srlg-if)# exit

RP/0/RP0/CPU0:router(config-srlg)# interface HunGigE0/0/1/0
RP/0/RP0/CPU0:router(config-srlg-if)# name groupY
RP/0/RP0/CPU0:router(config-srlg-if)# exit
RP/0/RP0/CPU0:router(config-srlg)# interface TenGigE0/0/1/1
RP/0/RP0/CPU0:router(config-srlg-if)# name groupY
RP/0/RP0/CPU0:router(config-srlg-if)# exit

RP/0/RP0/CPU0:router(config-srlg)# name groupX value 100
RP/0/RP0/CPU0:router(config-srlg)# name groupY value 200
RP/0/RP0/CPU0:router(config-srlg)# exit
```

```
RP/0/0/CPU0:r1(config)#router ospf 1
RP/0/0/CPU0:r1(config-ospf)#flex-algo 128
RP/0/0/CPU0:r1(config-ospf-flex-algo)#srlg exclude-any
RP/0/0/CPU0:r(config-ospf-flex-algo-srlg-exclude-any)#groupX
RP/0/0/CPU0:r(config-ospf-flex-algo-srlg-exclude-any)#groupY
RP/0/0/CPU0:r(config-ospf-flex-algo-srlg-exclude-any)#commit
```

### Verification

The following example shows how to verify the number of SRLGs excluded for OSPF:

```
RP/0/RP0/CPU0:router# show ospf topology summary
 Process ospf-1
 Instance default
  Router ID       : 192.168.0.1
  Number of Areas : 1
  Number of Algos : 1
  Max Path count  : 16
  Route count     : 10
  SR Global Block : 16000 - 23999

Area 0
    Number of Nodes : 6
     Algo 128
      FAD Advertising Router : 192.168.0.1
      FAD Area ID : 0
       Algo Type   : 0
       Metric Type : 0
          Number of Exlclude SRLGs  : (2)
          [1]:  100        [2]:  200
       FAPM supported : No
```

# Maximum Paths Per IS-IS Flexible Algorithm

*Table 58: Feature History Table*

| Feature Name | Release | Description |
|---|---|---|
| IS-IS: Maximum Paths Per Flexible Algorithm | Release 7.8.1 | This feature introduces a new subcommand under flex-algo command. This feature allows for maximum number of Equal-Cost Multi-path (ECMP) to be set for individual Flex Algorithms |

A new subcommand under **flex-algo** is introduced.

The **flex-algo** command now includes the **address-family** <*ipv4*/*ipv6*> **unicast** subcommand, and the **maximum-paths** <*maximum-paths*> subcommand.

**Note** For information on IS-IS Algo0 Maximum Paths, refer to the "Implementing IS-IS" chapter in the *Routing Configuration Guide for Cisco ASR 9000 Series Routers*.

The new subcommands allow for maximum number of Equal-Cost Multi-path (ECMP) to be set for individual algorithms. The value that is configured on a per-flex-algo per address-family basis overrides any value that is configured under the IS-IS global address-family submode.

### Usage Guidelines and Limitations

- The **maximum-paths** configuration is not part of the Flexible Algorithm Definitions (FAD). If the advertised definition is configured for the flexible algorithm, the **maximum-paths** will not be propagated by the IS-IS.
- The maximum-paths per algorithm takes precedence over maximum-paths per address-family.
- The maximum paths effective for each algorithm are as follows:
  - For Flex-Algo 128:
    - IPv4: 5
    - IPv6: 3
  - For Flex-Algos 129 through 255:
    - IPv4: 12
    - IPv6:8

### Configuration Example - Max Path

This example shows how you can set the maximum paths per-Flex-Algo:

```
Router(config)# router isis 10
Router(config-isis)# flex-algo 128
Router(config-isis-flex-algo)# metric-type te
Router(config-isis-flex-algo)# address-family ipv4 unicast
Router(config-isis-flex-algo-af)# maximum-paths 5
Router(config-isis-flex-algo)# exit
Router(config-isis-flex-algo-af)# address-family ipv6 unicast
Router(config-isis-flex-algo-af)# maximum-paths 3
Router(config-isis-flex-algo-af)# exit
```

# Example: Configuring IS-IS Flexible Algorithm

```
router isis 1
 affinity-map red bit-position 65
 affinity-map blue bit-position 8
 affinity-map green bit-position 201

 flex-algo 128
  advertise-definition
  affinity exclude-any red
  affinity include-any blue
 !
 flex-algo 129
  affinity exclude-any green
 !
!
```

```
address-family ipv4 unicast
 segment-routing mpls
!
interface Loopback0
 address-family ipv4 unicast
  prefix-sid algorithm 128 index 100
  prefix-sid algorithm 129 index 101
!
!
interface GigabitEthernet0/0/0/0
 affinity flex-algo red
!
interface GigabitEthernet0/0/0/1
 affinity flex-algo blue red
!
interface GigabitEthernet0/0/0/2
 affinity flex-algo blue
!
```

# Example: Configuring OSPF Flexible Algorithm

```
router ospf 1
 flex-algo 130
  priority 200
  affinity exclude-any
   red
   blue
  !
  metric-type delay
 !
 flex-algo 140
  affinity include-all
   green
  !
  affinity include-any
   red
  !
 !

  interface Loopback0
   prefix-sid index 10
   prefix-sid strict-spf index 40
   prefix-sid algorithm 128 absolute 16128
   prefix-sid algorithm 129 index 129
   prefix-sid algorithm 200 index 20
   prefix-sid algorithm 210 index 30
  !
 !

  interface GigabitEthernet0/0/0/0
   flex-algo affinity
    color red
    color blue
   !
  !

 affinity-map
  color red bit-position 10
  color blue bit-position 11
 !
```

# Example: Traffic Steering to Flexible Algorithm Paths

## BGP Routes on PE – Color Based Steering

SR-TE On Demand Next-Hop (ODN) feature can be used to steer the BGP traffic towards the Flexible Algorithm paths.

The following example configuration shows how to setup BGP steering local policy, assuming two router: R1 (2.2.2.2) and R2 (4.4.4.4), in the topology.

**Configuration on router R1:**

```
vrf Test
address-family ipv4 unicast
  import route-target
   1:150
  !
  export route-policy SET_COLOR_RED_HI_BW
  export route-target
   1:150
  !
!
!
interface Loopback0
ipv4 address 2.2.2.2 255.255.255.255
!
interface Loopback150
vrf Test
ipv4 address 2.2.2.222 255.255.255.255
!
interface TenGigE0/1/0/3/0
description exr1 to cxr1
ipv4 address 10.0.20.2 255.255.255.0
!
extcommunity-set opaque color129-red-igp
  129
end-set
!
route-policy PASS
  pass
end-policy
!
route-policy SET_COLOR_RED_HI_BW
  set extcommunity color color129-red-igp
  pass
end-policy
!
router isis 1
is-type level-2-only
net 49.0001.0000.0000.0002.00
log adjacency changes
affinity-map RED bit-position 28
flex-algo 128
  priority 228
!
address-family ipv4 unicast
  metric-style wide
  advertise link attributes
  router-id 2.2.2.2
  segment-routing mpls
```

```
!
interface Loopback0
  address-family ipv4 unicast
   prefix-sid index 2
   prefix-sid algorithm 128 index 282
  !
!
interface TenGigE0/1/0/3/0
  point-to-point
  address-family ipv4 unicast
  !
!
!
router bgp 65000
bgp router-id 2.2.2.2
address-family ipv4 unicast
!
address-family vpnv4 unicast
  retain route-target all
!
neighbor-group RR-services-group
  remote-as 65000
  update-source Loopback0
  address-family ipv4 unicast
  !
  address-family vpnv4 unicast
  !
!
neighbor 4.4.4.4
  use neighbor-group RR-services-group
!
vrf Test
  rd auto
  address-family ipv4 unicast
   redistribute connected
  !
segment-routing
traffic-eng
  logging
   policy status
  !
  segment-list sl-cxr1
   index 10 mpls label 16294
  !
  policy pol-foo
   color 129 end-point ipv4 4.4.4.4
   candidate-paths
    preference 100
     explicit segment-list sl-cxr1
     !
    !
   !
  !
!
!
```

### Configuration on router R2:

```
vrf Test
address-family ipv4 unicast
  import route-target
   1:150
  !
  export route-policy SET_COLOR_RED_HI_BW
```

```
  export route-target
   1:150
  !
!
!
interface TenGigE0/1/0/1
description cxr1 to exr1
ipv4 address 10.0.20.1 255.255.255.0
!
extcommunity-set opaque color129-red-igp
  129
end-set
!
route-policy PASS
  pass
end-policy
!
route-policy SET_COLOR_RED_HI_BW
  set extcommunity color color129-red-igp
  pass
end-policy
!
router isis 1
is-type level-2-only
net 49.0001.0000.0000.0004.00
log adjacency changes
affinity-map RED bit-position 28
affinity-map BLUE bit-position 29
affinity-map GREEN bit-position 30
flex-algo 128
  priority 228
!
flex-algo 129
  priority 229
!
flex-algo 130
  priority 230
!
address-family ipv4 unicast
  metric-style wide
  advertise link attributes
  router-id 4.4.4.4
  segment-routing mpls
!
interface Loopback0
  address-family ipv4 unicast
   prefix-sid index 4
   prefix-sid algorithm 128 index 284
   prefix-sid algorithm 129 index 294
   prefix-sid algorithm 130 index 304
  !
!
interface GigabitEthernet0/0/0/0
  point-to-point
  address-family ipv4 unicast
  !
!
interface TenGigE0/1/0/1
  point-to-point
  address-family ipv4 unicast
  !
!
router bgp 65000
bgp router-id 4.4.4.4
```

```
address-family ipv4 unicast
!
address-family vpnv4 unicast
!
neighbor-group RR-services-group
  remote-as 65000
  update-source Loopback0
  address-family ipv4 unicast
  !
  address-family vpnv4 unicast
  !
!
neighbor 10.1.1.1
  use neighbor-group RR-services-group
!
neighbor 2.2.2.2
  use neighbor-group RR-services-group
!
vrf Test
  rd auto
  address-family ipv4 unicast
   redistribute connected
  !
  neighbor 25.1.1.2
   remote-as 4
   address-family ipv4 unicast
    route-policy PASS in
    route-policy PASS out
   !
  !
!
!
segment-routing
!
end
```

CHAPTER 14

# Configure Segment Routing Path Computation Element

The Segment Routing Path Computation Element (SR-PCE) provides stateful PCE functionality by extending the existing IOS-XR PCEP functionality with additional capabilities. SR-PCE is supported on the MPLS data plane and IPv4 control plane.

**Note** The Cisco IOS XRv 9000 is the recommended platform to act as the SR-PCE. Refer to the Cisco IOS XRv 9000 Router Installation and Configuration Guide for more information.

*Table 59: Feature History Table*

| Feature Name | Release Information | Feature Description |
|---|---|---|
| SR-PCE: Single PCE scale enhancement | Release 7.5.1 | With this feature, support for a single PCE is enhanced to 50000 nodes, 100000 LSPs, 500000 links, and 2000 PCEP sessions. |


- About SR-PCE, on page 474
- Usage Guidelines and Limitations, on page 475
- Configure SR-PCE, on page 475
- PCE-Initiated SR Policies, on page 480
- SR-PCE Flexible Algorithm Multi-Domain Path Computation, on page 481
- ACL Support for PCEP Connection, on page 486
- Anycast SID-Aware Path Computation, on page 486
- SR-PCE IPv4 Unnumbered Interface Support, on page 491
- Inter-Domain Path Computation Using Redistributed SID, on page 493
- Configuring the North-Bound API on SR-PCE, on page 496

# About SR-PCE

*Table 60: Feature History Table*

| Feature Name | Release Information | Feature Description |
|---|---|---|
| TCP Authentication Option | Release 7.3.1 | This feature introduces support for TCP Authentication Option (TCP-AO), which replaces the TCP Message Digest 5 (MD5) option, which was used for authenticating PCEP (TCP) sessions by using a clear text or encrypted password. |

The path computation element protocol (PCEP) describes a set of procedures by which a path computation client (PCC) can report and delegate control of head-end label switched paths (LSPs) sourced from the PCC to a PCE peer. The PCE can request the PCC to update and modify parameters of LSPs it controls. The stateful model also enables a PCC to allow the PCE to initiate computations allowing the PCE to perform network-wide orchestration.

**Note** For more information on PCE, PCC, and PCEP, refer to the Path Computation Element section in the *MPLS Configuration Guide for Cisco ASR 9000 Series Routers*.

SR-PCE learns topology information by way of IGP (OSPF or IS-IS) or through BGP Link-State (BGP-LS).

SR-PCE is capable of computing paths using the following methods:

- TE metric—SR-PCE uses the TE metric in its path calculations to optimize cumulative TE metric.
- IGP metric—SR-PCE uses the IGP metric in its path calculations to optimize reachability.
- LSP Disjointness—SR-PCE uses the path computation algorithms to compute a pair of disjoint LSPs. The disjoint paths can originate from the same head-end or different head-ends. Disjoint level refers to the type of resources that should not be shared by the two computed paths. SR-PCE supports the following disjoint path computations:
  - Link – Specifies that links are not shared on the computed paths.
  - Node – Specifies that nodes are not shared on the computed paths.
  - SRLG – Specifies that links with the same SRLG value are not shared on the computed paths.
  - SRLG-node – Specifies that SRLG and nodes are not shared on the computed paths.

  When the first request is received with a given disjoint-group ID, the first LSP is computed, encoding the shortest path from the first source to the first destination. When the second LSP request is received with the same disjoint-group ID, information received in both requests is used to compute two disjoint paths: one path from the first source to the first destination, and another path from the second source to the second destination. Both paths are computed at the same time.

### TCP Authentication Option

TCP Message Digest 5 (MD5) authentication has been used for authenticating PCEP (TCP) sessions by using a clear text or encrypted password. This feature introduces support for TCP Authentication Option (TCP-AO), which replaces the TCP MD5 option.

TCP-AO uses Message Authentication Codes (MACs), which provides the following:

- Protection against replays for long-lived TCP connections
- More details on the security association with TCP connections than TCP MD5
- A larger set of MACs with minimal system and operational changes

TCP-AO is compatible with Master Key Tuple (MKT) configuration. TCP-AO also protects connections when using the same MKT across repeated instances of a connection. TCP-AO protects the connections by using traffic key that are derived from the MKT, and then coordinates changes between the endpoints.

**Note** TCP-AO and TCP MD5 are never permitted to be used simultaneously. TCP-AO supports IPv6, and is fully compatible with the proposed requirements for the replacement of TCP MD5.

# Usage Guidelines and Limitations

To ensure PCEP compatibility, we recommend that the Cisco IOS XR version on the SR-PCE be the same or later than the Cisco IOS XR version on the PCC or head-end.

# Configure SR-PCE

This task explains how to configure SR-PCE.

### Before you begin

The Cisco IOS XRv 9000 is the recommended platform to act as the SR-PCE.

### SUMMARY STEPS

1. **configure**
2. **pce**
3. **address ipv4** *address*
4. **state-sync ipv4** *address*
5. **tcp-buffer size** *size*
6. **password** {**clear** | **encrypted**} *password*
7. **tcp-ao** *key-chain* [**include-tcp-options**] [**accept-ao-mismatch-connection**]
8. **segment-routing** {**strict-sid-only** | **te-latency**}
9. **timers**
10. **keepalive** *time*
11. **minimum-peer-keepalive** *time*

12. **reoptimization** *time*
13. **exit**

## DETAILED STEPS

| | Command or Action | Purpose |
|---|---|---|
| **Step 1** | **configure**<br>**Example:**<br>`RP/0/RSP0/CPU0:router# configure` | Enters global configuration mode. |
| **Step 2** | **pce**<br>**Example:**<br>`RP/0/RSP0/CPU0:router(config)# pce` | Enables PCE and enters PCE configuration mode. |
| **Step 3** | **address ipv4** *address*<br>**Example:**<br>`RP/0/RSP0/CPU0:router(config-pce)# address ipv4 192.168.0.1` | Configures a PCE IPv4 address. |
| **Step 4** | **state-sync ipv4** *address*<br>**Example:**<br>`RP/0/RSP0/CPU0:router(config-pce)# state-sync ipv4 192.168.0.3` | Configures the remote peer for state synchronization. |
| **Step 5** | **tcp-buffer size** *size*<br>**Example:**<br>`RP/0/RSP0/CPU0:router(config-pce)# tcp-buffer size 1024000` | Configures the transmit and receive TCP buffer size for each PCEP session, in bytes. The default buffer size is 256000. The valid range is from 204800 to 1024000. |
| **Step 6** | **password** {**clear** \| **encrypted**} *password*<br>**Example:**<br>`RP/0/RSP0/CPU0:router(config-pce)# password encrypted pwd1` | Enables TCP MD5 authentication for all PCEP peers. Any TCP segment coming from the PCC that does not contain a MAC matching the configured password will be rejected. Specify if the password is encrypted or clear text.<br>**Note** TCP-AO and TCP MD5 are never permitted to be used simultaneously. |
| **Step 7** | **tcp-ao** *key-chain* [**include-tcp-options**] [**accept-ao-mismatch-connection**]<br>**Example:**<br>`RP/0/RSP0/CPU0:router(config-pce)# tcp-ao` | Enables TCP Authentication Option (TCP-AO) authentication for all PCEP peers. Any TCP segment coming from the PCC that does not contain a MAC matching the configured key chain will be rejected. |

| | Command or Action | Purpose |
|---|---|---|
| | `pce_tcp_ao include-tcp-options` | • **include-tcp-options**—Includes other TCP options in the header for MAC calculation.<br>• **accept-ao-mismatch-connection**—Accepts connection even if there is a mismatch of AO options between peers.<br>**Note** TCP-AO and TCP MD5 are never permitted to be used simultaneously. |
| **Step 8** | **segment-routing** {**strict-sid-only** \| **te-latency**}<br>**Example:**<br>`RP/0/RSP0/CPU0:router(config-pce)# segment-routing strict-sid-only` | Configures the segment routing algorithm to use strict SID or TE latency.<br>**Note** This setting is global and applies to all LSPs that request a path from this controller. |
| **Step 9** | **timers**<br>**Example:**<br>`RP/0/RSP0/CPU0:router(config-pce)# timers` | Enters timer configuration mode. |
| **Step 10** | **keepalive** *time*<br>**Example:**<br>`RP/0/RSP0/CPU0:router(config-pce-timers)# keepalive 60` | Configures the timer value for locally generated keep-alive messages. The default time is 30 seconds. |
| **Step 11** | **minimum-peer-keepalive** *time*<br>**Example:**<br>`RP/0/RSP0/CPU0:router(config-pce-timers)# minimum-peer-keepalive 30` | Configures the minimum acceptable keep-alive timer that the remote peer may propose in the PCEP OPEN message during session establishment. The default time is 20 seconds. |
| **Step 12** | **reoptimization** *time*<br>**Example:**<br>`RP/0/RSP0/CPU0:router(config-pce-timers)# reoptimization 600` | Configures the re-optimization timer. The default timer is 1800 seconds. |
| **Step 13** | **exit**<br>**Example:**<br>`RP/0/RSP0/CPU0:router(config-pce-timers)# exit` | Exits timer configuration mode and returns to PCE configuration mode. |

# Configure the Disjoint Policy (Optional)

This task explains how to configure the SR-PCE to compute disjointness for a pair of LSPs signaled by PCCs that do not include the PCEP association group-ID object in their PCEP request. This can be beneficial for deployments where PCCs do not support this PCEP object or when the network operator prefers to manage the LSP disjoint configuration centrally.

## SUMMARY STEPS

1. **disjoint-path**
2. **group-id** *value* **type** {**link** | **node** | **srlg** | **srlg-node**} [**sub-id** *value*]
3. **strict**
4. **lsp** {**1** | **2**} **pcc ipv4** *address* **lsp-name** *lsp_name* [**shortest-path**]

## DETAILED STEPS

| | Command or Action | Purpose |
|---|---|---|
| **Step 1** | **disjoint-path**<br>**Example:**<br>`RP/0/RSP0/CPU0:router(config-pce)# disjoint-path` | Enters disjoint configuration mode. |
| **Step 2** | **group-id** *value* **type** {**link** \| **node** \| **srlg** \| **srlg-node**} [**sub-id** *value*]<br>**Example:**<br>`RP/0/RSP0/CPU0:router(config-pce-disjoint)# group-id 1 type node sub-id 1` | Configures the disjoint group ID and defines the preferred level of disjointness (the type of resources that should not be shared by the two paths):<br>• **link**—Specifies that links are not shared on the computed paths.<br>• **node**—Specifies that nodes are not shared on the computed paths.<br>• **srlg**—Specifies that links with the same SRLG value are not shared on the computed paths.<br>• **srlg-node**—Specifies that SRLG and nodes are not shared on the computed paths.<br>If a pair of paths that meet the requested disjointness level cannot be found, then the paths will automatically fallback to a lower level:<br>• If the requested disjointness level is SRLG or node, then link-disjoint paths will be computed.<br>• If the requested disjointness level was link, or if the first fallback from SRLG or node disjointness failed, then the lists of segments encoding two shortest paths, without any disjointness constraint, will be computed. |

| | Command or Action | Purpose |
|---|---|---|
| **Step 3** | **strict**<br>**Example:**<br>`RP/0/RSP0/CPU0:router(config-pce-disjoint)# strict` | (Optional) Prevents the automatic fallback behavior of the preferred level of disjointness. If a pair of paths that meet the requested disjointness level cannot be found, the disjoint calculation terminates and no new path is provided. The existing path is not modified. |
| **Step 4** | **lsp** {**1** \| **2**} **pcc ipv4** *address* **lsp-name** *lsp_name* [**shortest-path**]<br>**Example:**<br>`RP/0/RSP0/CPU0:router(config-pce-disjoint)# lsp 1 pcc ipv4 192.168.0.1 lsp-name rtrA_t1 shortest-path`<br>`RP/0/RSP0/CPU0:router(config-pce-disjoint)# lsp 2 pcc ipv4 192.168.0.5 lsp-name rtrE_t2` | Adds LSPs to the disjoint group.<br>The **shortest-path** keyword forces one of the disjoint paths to follow the shortest path from the source to the destination. This option can only be applied to the the first LSP specified. |

# Global Maximum-delay Constraint

This feature allows a PCE to compare the cumulative latency of a computed path against a global maximum-delay constraint value. If the latency of the computed path exceeds this global constraint, the path is not considered valid. This ensures that all latency-based paths computed by the PCE and signaled to the PCCs in the network do not exceed this maximum-delay constraint.

```
pce
 constraints
   bounds
    cumulative
     type
      latency <1-4294967295> Bound metric value in microseconds
```

### Configuration

To configure a PCE for specifying maximum cumulative latency metric, you must complete the following configurations:

```
RP/0/RSP0/CPU0:ios(config)# pce
RP/0/RSP0/CPU0:ios(config-pce)# constraints
RP/0/RSP0/CPU0:ios(config-pce-constr)# bounds
RP/0/RSP0/CPU0:ios(config-pce-constr-bounds)# cumulative
RP/0/RSP0/CPU0:ios(config-pce-constr-bounds-type)# type latency 1000000
RP/0/RSP0/CPU0:ios(config-pce-constr-bounds-type)#
```

### Verification

Verify using the **show** command:

```
RP/0/RSP0/CPU0:ios(config-pce-constr-bounds-type)# show
Wed Oct 12 22:18:22.962 UTC
pce
 constraints
  bounds
```

```
    cumulative
     type latency 1000000
    !
   !
  !
 !
```

# PCE-Initiated SR Policies

Use cases based on centralized optimization, such as congestion mitigation solutions, rely on the ability of the PCE to signal and instantiate SR-TE policies in the network. We refer to this as PCE-initiated SR-TE policies.

PCE-initiated SR-TE policies can be triggered via Crossworks Network Controller (recommended approach) or via CLI at the PCE.

For more information on configuring SR-TE policies, see the SR-TE Policy Overview, on page 275.

The PCE deploys the SR-TE policy using PCC-PCE communication protocol (PCEP).

1. PCE sends a PCInitiate message to the PCC.
2. If the PCInitiate message is valid, the PCC sends a PCRpt message; otherwise, it sends PCErr message.
3. If the PCInitiate message is accepted, the PCE updates the SR-TE policy by sending PCUpd message.

You can achieve high-availability by configuring multiple PCEs with SR-TE policies. If the head-end (PCC) loses connectivity with one PCE, another PCE can assume control of the SR-TE policy.

### Configuration Example: PCE-Initiated SR Policy with Explicit SID List

To configure a PCE-initiated SR-TE policy, you must complete the following configurations:

1. Enter PCE configuration mode.
2. Create the segment list.

**Note** When configuring an explicit path using IP addresses of intermediate links, the SR-TE process prefers the protected Adj-SID of the link, if one is available.

3. Create the policy.

```
/* Enter PCE configuration mode and create the SR-TE segment lists */
Router# configure
Router(config)# pce

/* Create the SR-TE segment lists */
Router(config-pce)# segment-routing
Router(config-pce-sr)# traffic-eng
Router(config-pce-sr-te)# segment-list name addr2a
Router(config-pce-sr-te-sl)# index 10 address ipv4 10.1.1.2
Router(config-pce-sr-te-sl)# index 20 address ipv4 10.2.3.2
Router(config-pce-sr-te-sl)# index 30 address ipv4 10.1.1.4
Router(config-pce-sr-te-sl)# exit
```

```
/* Create the SR-TE policy */
Router(config-pce-sr-te)# peer ipv4 10.1.1.1
Router(config-pce-sr-te)# policy P1
Router(config-pce-sr-te-policy)# color 2 end-point ipv4 2.2.2.2
Router(config-pce-sr-te-policy)# candidate-paths
Router(config-pce-sr-te-policy-path)# preference 50
Router(config-pce-sr-te-policy-path-preference)# explicit segment-list addr2a
Router(config-pce-sr-te-pp-info)# commit
Router(config-pce-sr-te-pp-info)# end
Router(config)#
```

### Running Config

```
pce
 segment-routing
  traffic-eng
   segment-list name addr2a
    index 10 address ipv4 10.1.1.2
    index 20 address ipv4 10.2.3.2
    index 30 address ipv4 10.1.1.4
   !
   peer ipv4 10.1.1.1
    policy P1
     color 2 end-point ipv4 2.2.2.2
     candidate-paths
      preference 50
       explicit segment-list addr2a
      !
     !
```

# SR-PCE Flexible Algorithm Multi-Domain Path Computation

*Table 61: Feature History Table*

| Feature Name | Release Information | Feature Description |
|---|---|---|
| SR-PCE Flexible Algorithm Multi-Domain Path Computation | Release 7.3.1 | With this feature, SR-PCE can use Flexible Algorithms to compute multi-domain paths. |

Flexible Algorithm provides a traffic engineered path automatically computed by the IGP to any destination reachable by the IGP. With the SR-PCE Flexible Algorithm Multi-Domain Path Computation feature, SR-PCE can use Flexible Algorithms to compute multi-domain paths. See the Enabling Segment Routing Flexible Algorithm, on page 449 chapter for information about Segment Routing Flexible Algorithm.

The SR-PCE Flexible Algorithm Multi-Domain Path Computation feature incorporates the following functionality:

- BGP-LS has been augmented to allow selected nodes to advertise the Flexible Algorithm definition (FAD) to the SR-PCE
- PCEP has been augmented (vendor-specific object) to allow a PCC to indicate SR policy constraint based on the Flexible Algorithm instance number

- SR-PCE algorithms have been augmented to compute paths based on a Flexible Algorithm constraint

The SR-PCE Flexible Algorithm multi-domain path computation requires the following:

- The same Flexible Algorithm instance ID is used across domains.
- The metric for those Flexible Algorithm instances must be the same across domains.
- The affinity constraints for those Flexible Algorithm instances may be different across domains.
- Multiple Flexible Algorithms can exist in a domain.

For example, considering a multi-domain topology (Domain 1 and Domain 2), the following scenarios meet the requirements listed above:

| Scenario | Domain 1 | Domain 2 |
|---|---|---|
| Scenario 1 | Flexible Algorithm 128, metric delay | Flexible Algorithm 128, metric delay |
| Scenario 2 | Flexible Algorithm 128, metric delay | Flexible Algorithm 128, metric delay, exclude affinity blue |
| Scenario 3 | Flexible Algorithm 128, metric delay, exclude affinity yellow | Flexible Algorithm 128, metric delay, exclude affinity blue |
| Scenario 4 | Flexible Algorithm 128, metric delay<br>Flexible Algorithm 129, metric IGP | Flexible Algorithm 128, metric delay<br>Flexible Algorithm 129, metric IGP |

**Note** The use of a Flexible Algorithm constraint in a multi-domain SR topology does not preclude the use of an SR policy that are optimized for a particular metric type. For example, a policy can request a PCE for a Multi Domain policy based on metric delay. SR-PCE computes the path and encodes it with regular prefix SIDs and Adj-SIDs as required. Alternatively, a policy can request to have a constraint for a Flexible Algorithm instance X, which is defined in multiple domains and it minimizes based on metric delay. In this case, the SR-PCE computes the multi-domain path and encodes it using only Flexible Algorithm prefix SIDs. This case benefits from the optimized label stack size that Flexible Algorithm provides (1 label per domain).

# Example: SR-PCE Flexible Algorithm Multi-Domain Path Computation Use Case

The following use case depicts a multi-domain topology with two IS-IS processes, each with a Flexible Algorithm instance of 128 that minimizes metric delay. A multi-domain SR policy programmed at Node 1 leverages a Flexible Algorithm 128 path computed by the SR-PCE toward Node 8.

*Figure 31: Multi-Domain Topology*

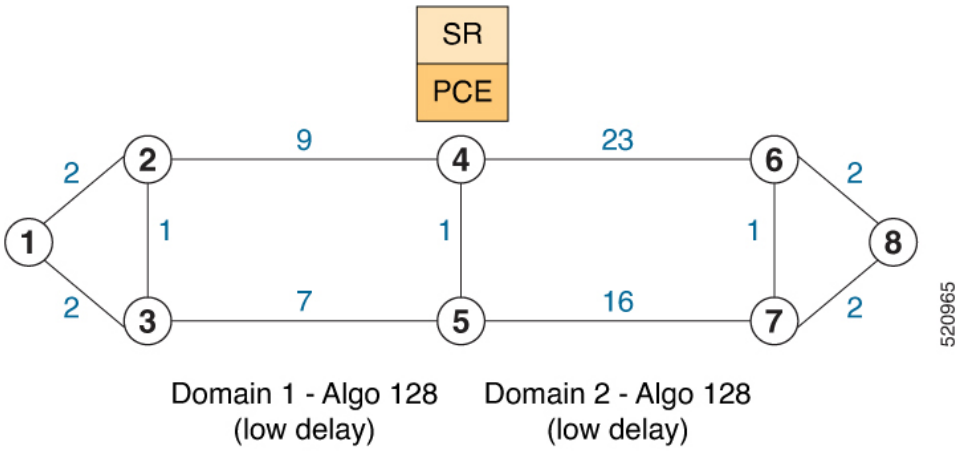


### Configuration on Node 8

#### IS-IS and Flexible Algorithm Configuration

```
router isis 2
 is-type level-2-only
 net 49.0002.0000.0000.0008.00
 distribute link-state
 flex-algo 128
   metric-type delay
   advertise-definition

 address-family ipv4 unicast
   metric-style wide
   router-id 10.1.1.8
   segment-routing mpls
  !
 interface Loopback0
   passive
   address-family ipv4 unicast
    prefix-sid absolute 16008
    prefix-sid algorithm 128 absolute 16808
 !
```

### Configuration on Node 4 (ABR/ASBR)

#### IS-IS and Flexible Algorithm Configuration

```
router isis 1
 is-type level-2-only
 net 49.0001.0000.0000.0004.00
 distribute link-state instance-id 100
 flex-algo 128
   metric-type delay
   advertise-definition

 address-family ipv4 unicast
   metric-style wide
   router-id 10.1.1.4
   segment-routing mpls
  !
```

```
 interface Loopback0
   passive
   address-family ipv4 unicast
    prefix-sid absolute 16004
    prefix-sid algorithm 128 absolute 16804
 !
router isis 2
 is-type level-2-only
 net 49.0002.0000.0000.0004.00
 distribute link-state instance-id 200
 flex-algo 128
   metric-type delay
   advertise-definition

 address-family ipv4 unicast
   metric-style wide
   router-id 10.1.1.4
   segment-routing mpls
  !
 interface Loopback0
   passive
   address-family ipv4 unicast
    prefix-sid absolute 16004
    prefix-sid algorithm 128 absolute 16804
 !
```

### BGP-LS Configuration

```
router bgp 65000
 bgp router-id 10.1.1.4
 address-family link-state link-state
 !
 neighbor-group AS65000-LS-group
  remote-as 65000
  update-source Loopback0
  address-family link-state link-state
  !
 !
 neighbor 10.1.1.10
  use neighbor-group AS65000-LS-group
  description *** To SR-PCE ***
  !
 !
!
```

## Configuration on Node 1

### IS-IS and Flexible Algorithm Configuration

```
router isis 1
 is-type level-2-only
 net 49.0001.0000.0000.0001.00
 distribute link-state
 flex-algo 128
   metric-type delay
   advertise-definition

 address-family ipv4 unicast
   metric-style wide
   router-id 10.1.1.1
   segment-routing mpls
  !
```

```
 interface Loopback0
   passive
   address-family ipv4 unicast
    prefix-sid absolute 16001
    prefix-sid algorithm 128 absolute 16801
 !
```

### SR Policy Configuration

```
segment-routing
 traffic-eng
  policy FOO
   color 100 end-point ipv4 10.1.1.8
   candidate-paths
    preference 100
     dynamic
      pcep
      !
     !
     constraints
      segments
       sid-algorithm 128
      !
     !
    !
   !
  !
 !
!
```

### PCC Configuration

```
segment-routing
 traffic-eng
  pcc
   source-address ipv4 10.1.1.1
   pce address ipv4 10.1.1.10
    precedence 10
   !
   report-all
  !
 !
!
```

### Configuration on PCE

```
pce
 address ipv4 10.1.1.10
 rest
 !
!
router bgp 65000
 bgp router-id 10.1.1.10
 address-family link-state link-state
 !
 neighbor-group AS65000-LS-group
  remote-as 65000
  update-source Loopback0
  address-family link-state link-state
  !
 !
 neighbor 10.1.1.4
  use neighbor-group AS65000-LS-group
  description *** To Node-4 ***
```

```
  !
 !
 neighbor 10.1.1.5
  use neighbor-group AS65000-LS-group
  description *** To Node-5 ***
  !
 !
!
```

# ACL Support for PCEP Connection

PCE protocol (PCEP) (RFC5440) is a client-server model running over TCP/IP, where the server (PCE) opens a port and the clients (PCC) initiate connections. After the peers establish a TCP connection, they create a PCE session on top of it.

The ACL Support for PCEP Connection feature provides a way to protect a PCE server using an Access Control List (ACL) to restrict IPv4 PCC peers at the time the TCP connection is created based on the source address of a client. When a client initiates the TCP connection, the ACL is referenced, and the client source address is compared. The ACL can either permit or deny the address and the TCP connection will proceed or not.

Refer to the Implementing Access Lists and Prefix Lists chapter in the *IP Addresses and Services Configuration Guide for Cisco ASR 9000 Series Routers* for detailed ACL configuration information.

To apply an ACL to the PCE, use the **pce peer-filter ipv4 access-list** *acl_name* command.

The following example shows how to configure an ACL and apply it to the PCE:

```
pce
 address ipv4 10.1.1.5
 peer-filter ipv4 access-list sample-peer-filter
!
ipv4 access-list sample-peer-filter
 10 permit ipv4 host 10.1.1.6 any
 20 permit ipv4 host 10.1.1.7 any
 30 deny ipv4 any any
!
```

# Anycast SID-Aware Path Computation

This feature allows the SR-TE head-end or SR-PCE to compute a path that is encoded using Anycast prefix SIDs of nodes along the path.

An Anycast SID is a type of prefix SID that identifies a set of nodes and is configured with n-flag clear. The set of nodes (Anycast group) is configured to advertise a shared prefix address and prefix SID. Anycast routing enables the steering of traffic toward multiple advertising nodes, providing load-balancing and redundancy. Packets addressed to an Anycast address are forwarded to the topologically nearest nodes.

**Note** For information on configuring Anycast SID, see Configuring a Prefix-SID on the IS-IS Enabled Loopback Interface, on page 216 and Configuring a Prefix-SID on the OSPF-Enabled Loopback Interface, on page 239.

This example shows how Anycast SIDs are inserted into a computed SID list.

The following figure shows 3 isolated IGP domains without redistribution and without BGP 3107. Each Area Border Router (ABR) 1 through 4 is configured with a node SID. ABRs 1 and 2 share Anycast SID 16012 and ABRs 3 and 4 share Anycast SID 16034.

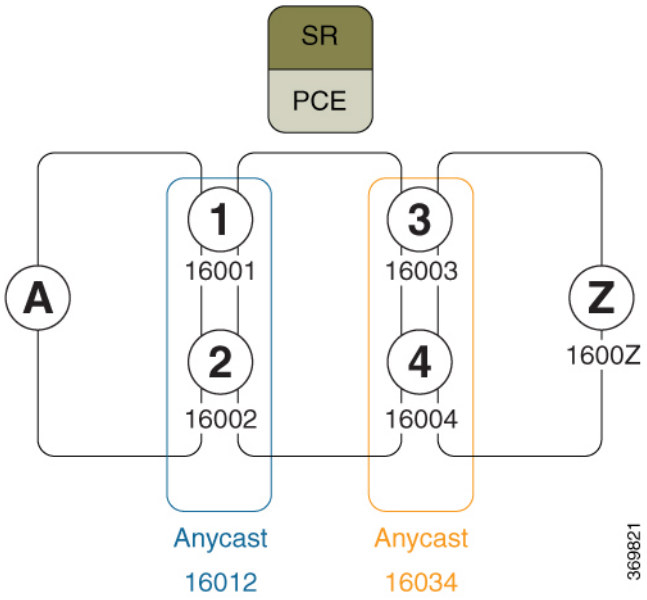


Consider the case where nodes A and Z are provider edge (PE) routers in the same VPN. Node A receives a VPN route with BGP next-hop to node Z. Node A resolves the SR path to node Z based on ODN behaviors with delegation of path computation to SR-PCE.

Before considering Anycast SIDs, the head-end router or SR-PCE computes the SID list.

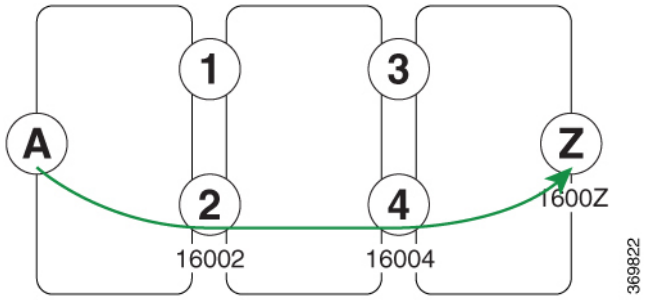


Assume that the computed path from node A to node Z traverses node 2 and node 4. This translates to SID list {16002, 16004, 1600Z} when node SIDs are leveraged to encode the path.

When an Anycast SID-aware path is requested, the path computation algorithm performs the following:

- **Path Computation**—Computes the path according to optimization objectives and constraints
- **Path Encoding**—Encodes the path in a SID list leveraging node-SIDs and adj-SIDs as applicable
- **Anycast SID Replacement**—Reiterates the original SID list by replacing node SIDs with Anycast SIDs present on the nodes along the computed path.

  If a node has multiple Anycast SIDs, the algorithm considers them according to their weights. See Weighted Anycast SIDs, on page 490.

- **Optimality Validation**—The new paths are validated against the original optimization objectives and constraints (maintain same cumulative metric as original SID list and do not violate path constraints).
- **Anycast SID Promotion**—If the optimality validation is successful, then the Anycast-encoded SID list is signaled and instantiated in the forwarding.

The following figure depicts cumulative metrics between nodes in the network.

Under these conditions, the optimality check is met, and therefore, the Anycast-encoded SID list from node A to node Z is {16012,16034,1600Z}.

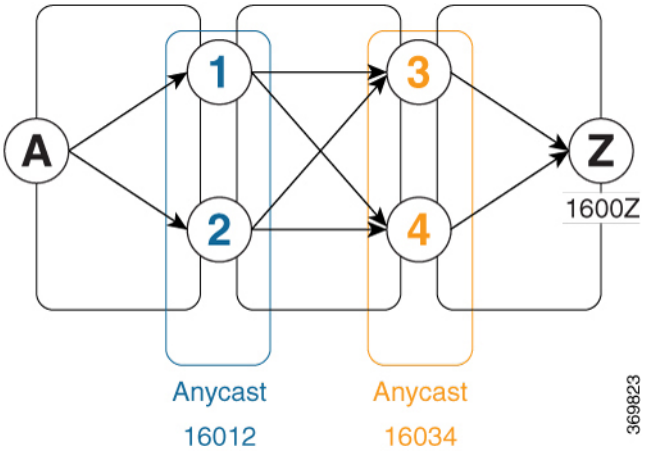


The Anycast SID aware path computation also provides resiliency. For example, if one of the ABRs (in this case, ABR 1) becomes unavailable or unreachable, the path from node A to node Z {16012,16034,1600Z} will still be valid and usable.

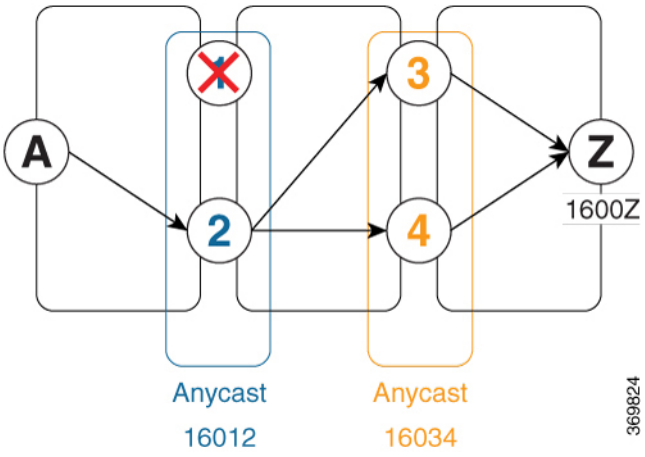


### Configuration Examples

1. Configure Prefix SIDs on the ABR nodes.
   a. Configure each node with a node SID.
   b. Configure each group of nodes with a shared Anycast SID.

See Configuring a Prefix-SID on the IS-IS Enabled Loopback Interface, on page 216 and Configuring a Prefix-SID on the OSPF-Enabled Loopback Interface, on page 239.

2. Configure SR policies to include Anycast SIDs for path computation using the **anycast-sid-inclusion** command.

   This example shows how to configure a local SR policy to include Anycast SIDs for PCC-initiated path computation at the head-end router:

```
Router(config)# segment-routing traffic-eng
Router(config-sr-te)# policy FOO
Router(config-sr-te-policy)# color 10 end-point ipv4 10.1.1.10
Router(config-sr-te-policy)# candidate-paths
Router(config-sr-te-policy-path)# preference 100
Router(config-sr-te-policy-path-pref)# dynamic
Router(config-sr-te-pp-info)# anycast-sid-inclusion
```

### Running Configuration

Use the **anycast-sid-inclusion** command to request Anycast SID-aware path computation for the following SR policy types:

- Local SR policy with PCC-initiated path computation at the head-end router:

```
segment-routing
  traffic-eng
    policy FOO
      color 10 end-point ipv4 10.1.1.10
      candidate-paths
        preference 100
          dynamic
            anycast-sid-inclusion
```

- Local SR policy with PCC-initiated/PCE-delegated path computation at the SR-PCE:

```
segment-routing
 traffic-eng
  policy BAR
   color 20 end-point ipv4 10.1.1.20
    candidate-paths
     preference 100
      dynamic
       pcep
       anycast-sid-inclusion
```

- On-demand SR policies with a locally computed dynamic path at the head-end, or centrally computed dynamic path at the SR-PCE:

```
segment-routing
  traffic-eng
   on-demand color 10
    dynamic
     anycast-sid-inclusion
```

- On-demand SR policies with centrally computed dynamic path at the SR-PCE:

```
segment-routing
 traffic-eng
  on-demand color 20
   dynamic
    pcep
    anycast-sid-inclusion
```

### Weighted Anycast SIDs

*Table 62: Feature History Table*

| Feature Name | Release Information | Feature Description |
|---|---|---|
| Weighted Anycast SID-Aware Path Computation | Release 7.3.1 | This feature extends Anycast SIDs with weighted nodes.<br>Weighted Anycast nodes advertise a cost (weight) along with the Anycast SID. Traffic is then distributed according to the weights.<br>Weighted Anycast SIDs allow for highly available paths with node redundancy and path optimality that provide Fast Re-Route (FRR) for node failure of service provider edge (PE) routers and ABR/ASBRs nodes in multi-domain networks. |

Weighted Anycast nodes advertise a cost along with the Anycast SID. This cost serves as a weight. The native SR path computation algorithms are augmented to compute optimum paths relying on Weighted Anycast SIDs during path encoding. Traffic to the SID is then distributed according to the weights.

The following example shows how node SID, Anycast SID, and Weighted Anycast SID are applied on node 1:

```
router isis 1
 interface Loopback0
  address-family ipv4 unicast
   prefix-sid absolute 16001 // Node SID
  !
 !
 interface Loopback1
  prefix-attributes anycast
  address-family ipv4 unicast
   prefix-sid absolute 16012 // Anycast SID - (prefer node 1 or 2)
  !
 !
 interface Loopback2
  prefix-attributes anycast
  address-family ipv4 unicast
   weight 1
   prefix-sid absolute 17012 // Weighted Anycast SID (prefer node 1)
  !
 !
 interface Loopback3
  prefix-attributes anycast
  address-family ipv4 unicast
   weight 100000
   prefix-sid absolute 18012 // Weighted Anycast SID (prefer node 2)
  !
 !
!
```

# SR-PCE IPv4 Unnumbered Interface Support

This feature allows IPv4 unnumbered interfaces to be part of an SR-PCE topology database.

An unnumbered IPv4 interface is not identified by its own unique IPv4 address. Instead, it is identified by the router ID of the node where this interfaces resides and the local SNMP index assigned for this interface.

This feature provides enhancements to the following components:

- IGPs (IS-IS and OSPF):
  - Support the IPv4 unnumbered interfaces in the SR-TE context by flooding the necessary interface information in the topology
- SR-PCE:

**Note** SR-PCE and path computation clients (PCCs) need to be running Cisco IOS XR 7.0.2 or later.

  - Compute and return paths from a topology containing IPv4 unnumbered interfaces.
  - Process reported SR policies from a head-end router that contain hops with IPv4 unnumbered adjacencies.

    PCEP extensions for IPv4 unnumbered interfaces adhere to IETF RFC8664 “PCEP Extensions for Segment Routing” (https://datatracker.ietf.org/doc/rfc8664/). The unnumbered hops use a Node or Adjacency Identifier (NAI) of type 5. This indicates that the segment in the explicit routing object (ERO) is an unnumbered adjacency with an IPv4 ID and an interface index.
- SR-TE process at the head-end router:
  - Compute its own local path over a topology, including unnumbered interfaces.
  - Process PCE-computed paths that contain hops with IPv4 unnumbered interfaces.
  - Report a path that contains hops with IPv4 unnumbered interfaces to the PCE.

### Configuration Example

The following example shows how to configure an IPv4 unnumbered interface:

```
RP/0/0/CPU0:rtrA(config)# interface GigabitEthernet0/0/0/0
RP/0/0/CPU0:rtrA(config-if)# ipv4 point-to-point
RP/0/0/CPU0:rtrA(config-if)# ipv4 unnumbered Loopback0
```

To bring up the IPv4 unnumbered adjacency under the IGP, configure the link as point-to-point under the IGP configuration. The following example shows how to configure the link as point-to-point under the IGP configuration:

```
RP/0/0/CPU0:rtrA(config)# router ospf one
RP/0/0/CPU0:rtrA(config-ospf)# area 0
RP/0/0/CPU0:rtrA(config-ospf-ar)# interface GigabitEthernet0/0/0/0
```

```
RP/0/0/CPU0:rtrA(config-ospf-ar-if)# network point-to-point
```

### Verification

Use the **show ipv4 interface** command to display information about the interface:

```
RP/0/0/CPU0:rtrA# show ipv4 interface GigabitEthernet0/0/0/0 brief
Tue Apr  2 12:59:53.140 EDT
Interface                      IP-Address      Status                Protocol
GigabitEthernet0/0/0/0         192.168.0.1     Up                    Up
```

This interface shows the IPv4 address of Loopback0.

Use the **show snmp interface** command to find the SNMP index for this interface:

```
RP/0/0/CPU0:rtrA# show snmp interface
Tue Apr  2 13:02:49.190 EDT
ifName : Null0                 ifIndex : 3
ifName : Loopback0             ifIndex : 10
ifName : GigabitEthernet0/0/0/0  ifIndex : 6
```

The interface is identified with the pair (IPv4:192.168.0.1, index:6).

Use the **show ospf neighbor** command to display the adjacency:

```
RP/0/0/CPU0:rtrA# show ospf neighbor gigabitEthernet 0/0/0/0 detail
…
Neighbor 192.168.0.4, interface address 192.168.0.4
    In the area 0 via interface GigabitEthernet0/0/0/0
    Neighbor priority is 1, State is FULL, 6 state changes
    …
    Adjacency SIDs:
        Label: 24001,    Dynamic, Unprotected
    Neighbor Interface ID: 4
```

The output of the **show pce ipv4 topology** command is enhanced to display the interface index instead of the IP address for unnumbered interfaces:

```
RP/0/0/CPU0:sr-pce# show pce ipv4 topology
…
  Link[2]: unnumbered local index 6, remote index 4
    Local node:
      OSPF router ID: 192.168.0.1 area ID: 0 ASN: 0
    Remote node:
      TE router ID: 192.168.0.4
      OSPF router ID: 192.168.0.4 area ID: 0 ASN: 0
    Metric: IGP 1, TE 1, Latency 1 microseconds
    Bandwidth: Total 125000000 Bps, Reservable 0 Bps
    Admin-groups: 0x00000000
    Adj SID: 24001 (unprotected)
```

The output of **show pce lsp detail** command includes unnumbered hops:

```
RP/0/0/CPU0:sr-pce# show pce lsp detail
…
   Reported path:
     Metric type: TE, Accumulated Metric 3
      SID[0]: Adj unnumbered, Label 24001, local 192.168.0.1(6), remote 192.168.0.4(4)
      SID[1]: Adj unnumbered, Label 24002, local 192.168.0.4(7), remote 192.168.0.3(7)
      SID[2]: Adj unnumbered, Label 24000, local 192.168.0.3(5), remote 192.168.0.2(5)
   Computed path: (Local PCE)
     Computed Time: Wed Apr 03 11:01:46 EDT 2019 (00:01:06 ago)
```

```
Metric type: TE, Accumulated Metric 3
 SID[0]: Adj unnumbered, Label 24001, local 192.168.0.1(6), remote 192.168.0.4(4)
 SID[1]: Adj unnumbered, Label 24002, local 192.168.0.4(7), remote 192.168.0.3(7)
 SID[2]: Adj unnumbered, Label 24000, local 192.168.0.3(5), remote 192.168.0.2(5)
```

# Inter-Domain Path Computation Using Redistributed SID

*Table 63: Feature History Table*

| Feature Name | Release Information | Feature Description |
|---|---|---|
| SR-PCE: Inter-Domain Computation using Redistributed SID (SRTE - BGP-LU Domains Interworking) | Release 7.3.1 | This feature adds new functionality to the SR-PCE that enables it to compute a path for remote non-SR end-point device distributed by BGP-LU. |

A Path Computation Element (PCE) computes SR-TE paths based on SR topology database that stores connectivity, state, and TE attributes of SR network nodes and links. BGP Labeled Unicast (BGP-LU) provides MPLS transport across IGP boundaries by advertising loopbacks and label binding of impact edge and border routers across IGP boundaries.

This feature adds new functionality to the SR-PCE that enables it to compute a path for remote non-SR end-point device distributed by BGP-LU.

The remote end-point device in the BGP-LU domain is unknown to the SR-PCE. For the SR-PCE to know about the end-point device, the gateway ABR/ASBR learns the end-point prefix via BGP-LU. The prefix is then redistributed to SR-PCE topology database from the gateway ABR/ASBR. SR-PCE then can compute the best path from the head-end device to the selected gateway router.

The following topology shows an SR domain and a BGP-LU domain, with a gateway ABR/ASBR between the two domains.

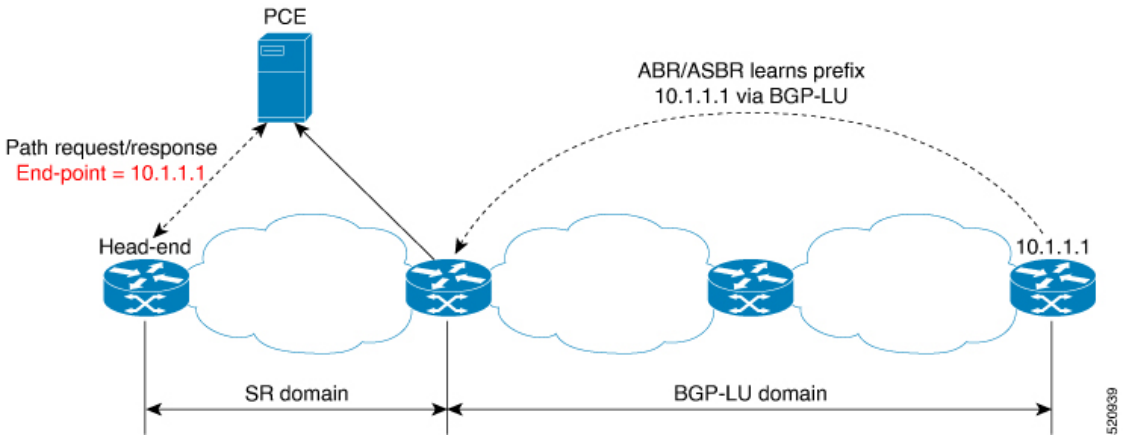


1. The gateway ABR/ASBR is configured with BGP/IGP helper to learn the remote prefix through BGP-LU and redistribute the remote prefix to the IGP helper, then to SR-PCE.
2. The SR-PCE selects the best gateway node to BGP-LU domain and computes the path to reach the remote prefix through the gateway node.

3. The head-end device in the SR domain requests a path to the remote destination and signals the SR profile interworking with the BGP-LU domain.

The BGP-LU prefix advertisement to SR-PCE Traffic Engineer Database (TED) is done by creating an IGP helper on the ABR/ASBR to redistribute BGP-LU prefix information to IGP. IGP then sends the prefix information to the SR-PCE via BGP-LS.

If there are multiple ABR/ASBRs advertising the same remote BGP-LU prefix, the SR-PCE selects the best gateway node to the BGP-LU domain using the accumulative metric from the head-end device to the gateway and the advertised metric from the gateway to the destination.

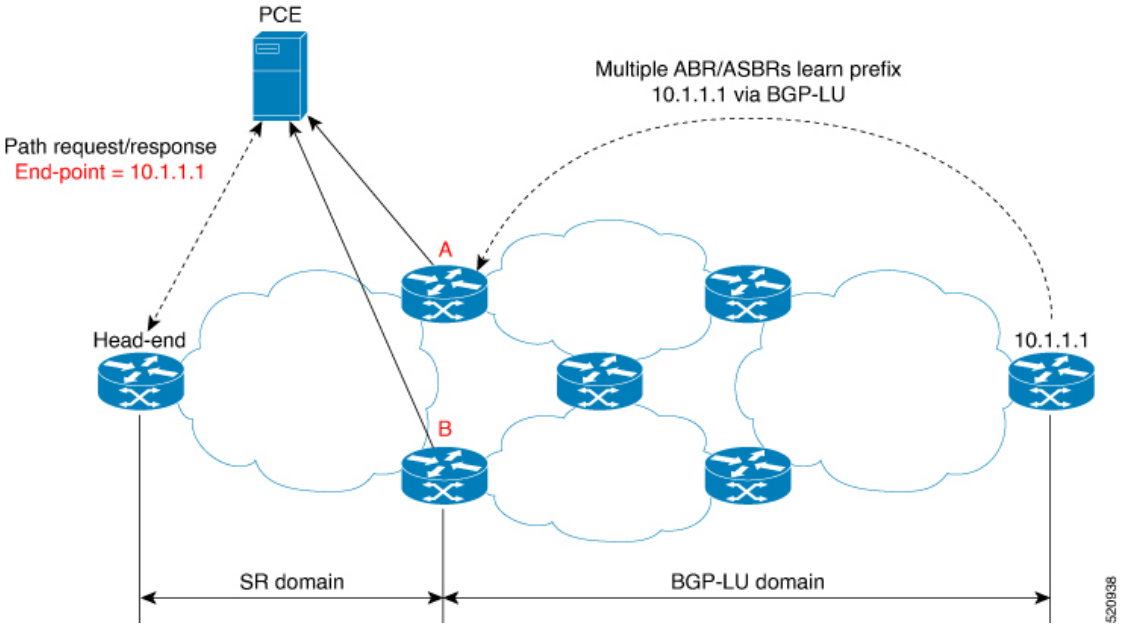


# Example: Inter-Domain Path Computation Using Redistributed SID

The following examples show the configurations for the IGP helper, BGP-LU, and proxy BGP-SR:

### Configuration on the End-Point Device

Configure the end-point device to allocate a label for the BGP-LU prefix on the end-point device:

```
router bgp 3107
bgp router-id 1.0.0.8
address-family ipv4 unicast
  network 1.0.0.8/32 route-policy bgplu-com
  allocate-label all

route-policy bgplu-com
  set community (65002:999)
end-policy
```

### Configuration on the Gateway ABR/ASBR

1. Configure the remote prefix set and create the route policy for the BGP-LU domain:

```
prefix-set bgplu
  1.0.0.7/32,
  1.0.0.8/32,
  1.0.0.101/32,
  1.0.0.102/32
end-set
!

route-policy bgp2isis
  if destination in bgplu then
    pass
  else
    drop
  endif
end-policy
!
end
```

2. Configure the helper IGP instance on the Loopback interface:

```
router isis 101
 is-type level-2-only
 net 49.0001.0000.1010.1010.00
 distribute link-state instance-id 9999
 nsf cisco
 nsf lifetime 120
 address-family ipv4 unicast
  metric-style wide
  maximum-paths 64
  router-id Loopback10
  redistribute bgp 3107 metric 200 route-policy bgp2isis
  segment-routing mpls sr-prefer
!
interface Loopback10 >>> this loopback is for gateway SR-TE node-id
  passive
  address-family ipv4 unicast
   prefix-sid index 2001 explicit-null
```

3. Configure the gateway proxy BGP-SR and SR Mapping Server to allocate SR labels:

```
router bgp 3107
 address-family ipv4 unicast
  segment-routing prefix-sid-map
  allocate-label all

segment-routing
global-block 16000 23999
mapping-server
  prefix-sid-map
   address-family ipv4
    1.0.0.7/32 2007
    1.0.0.8/32 2008
    1.0.0.101/32 2101
    1.0.0.102/32 2102
```

# Configuring the North-Bound API on SR-PCE

*Table 64: Feature History Table*

| Feature Name | Release Information | Feature Description |
|---|---|---|
| SR-PCE: Stateful North-Bound API for Tree-SID | Release 7.5.1 | The SR-PCE provides a north-bound HTTP-based API to allow communication between the SR-PCE and the Cisco Crosswork Optimization Engine.<br>This release adds stateful north-bound APIs to support real-time monitoring of Tree-SID states on the SR-PCE using a subscription model.<br>For more information, refer to the Cisco Crosswork Optimization Engine User Guides. |

*Table 65: Feature History Table*

| Feature Name | Release Information | Feature Description |
|---|---|---|
| SR-PCE: North-Bound API for SRv6 and Flexible Algorithm in Cisco Optimization Engine (COE) v3.0 release | Release 7.3.2 | The SR-PCE provides a north-bound HTTP-based API to allow communication between the SR-PCE and the Cisco Crosswork Optimization Engine.<br>This release adds support for the following:<br>• Reporting of Flexible Algorithm participation and definitions<br>• SRv6 topology information (nodes, links, Node uSIDs and Adj uSIDs)<br>• SRv6 uSID list and uB6 SIDs allocated for a policy<br>For more information, refer to the Cisco Crosswork Optimization Engine User Guides. |

The SR-PCE provides a north-bound HTTP-based API to allow communication between SR-PCE and external clients and applications.

Over this API, an external application can leverage the SR-PCE for topology discovery, SR policy discovery, and SR policy instantiation.

The Cisco Crosswork Optimization Engine is an application that leverages the SR-PCE. For more information, refer to the Cisco Crosswork Optimization Engine User Guides.

Use the following commands under PCE configuration mode to configure the API to allow communication between SR-PCE and external clients or applications.

| Command | Description |
|---|---|
| **rest authentication basic** | (Optional) Specify basic (plaintext) authentication. By default, authentication is disabled. |
| **rest username** *password* {**clear** \| **encrypted**} *password* | Add credentials when connecting to API.<br>**Note** This command is used only if authentication is configured. |
| **rest sibling ipv4** *address* | Opens a synchronization channel to another PCE in the same high availability (HA) pair.<br>**Note** For more information regarding SR-PCE HA pairs, refer to the Multiple Cisco SR-PCE HA Pairs chapter of the Cisco Crosswork Optimization Engine 1.2.1 User Guide. |

| Command | Description |
|---|---|
| **api authentication** {**basic** \| **digest**} | Specify the type of authentication:<br>• **basic** – Use HTTP Basic authentication (plaintext)<br>• **digest** – Use HTTP Digest authentication (MD5) |
| **api username** *password* {**clear** \| **encrypted**} *password* | Add credentials when connecting to API. |
| **api sibling ipv4** *address* | Opens a synchronization channel to another PCE in the same high availability (HA) pair.<br>**Note** For more information regarding SR-PCE HA pairs, refer to the Multiple Cisco SR-PCE HA Pairs chapter of the Cisco Crosswork Optimization Engine 1.2.1 User Guide. |

### Example: Configuring API on SR-PCE

```
pce
 address ipv4 10.1.1.100
 rest
  user admin
   password encrypted 1304131F0202
  !
  authentication basic
```

```
  sibling ipv4 10.1.1.200
 !
!
end


pce
 address ipv4 10.1.1.100
 api
  user admin
   password encrypted 1304131F0202
  !
  authentication digest
  sibling ipv4 10.1.1.200
 !
!
end
```

The following example shows the current active connections:

```
RP/0/0/CPU0:pce1# show tcp brief | i 8080
Thu Aug  6 00:40:15.408 PDT
0xe9806fb8 0x60000000      0      0  :::8080                :::0                   LISTEN
0xe94023b8 0x60000000      0      0  10.1.1.100:50487       10.1.1.200:8080        ESTAB
0xeb20bb40 0x60000000      0      0  10.1.1.100:8080        10.1.1.200:44401       ESTAB
0xe98031a0 0x60000000      0      0  0.0.0.0:8080           0.0.0.0:0              LISTEN
```

The first and fourth entries show the API server listening for IPv4 and IPv6 connections.

The second and third entries show the established sibling connection between PCE1 (10.1.1.100) and PCE2 (10.1.1.200).

CHAPTER 15

# Configure Performance Measurement

Network performance metrics is a critical measure for traffic engineering (TE) in service provider networks. Network performance metrics include the following:

- Packet loss
- Delay
- Delay variation
- Bandwidth utilization

These network performance metrics provide network operators information about the performance characteristics of their networks for performance evaluation and help to ensure compliance with service level agreements. The service-level agreements (SLAs) of service providers depend on the ability to measure and monitor these network performance metrics. Network operators can use Segment Routing Performance Measurement (SR-PM) feature to monitor the network metrics for links and end-to-end TE label switched paths (LSPs).

The following table explains the functionalities supported by performance measurement feature for measuring delay for links or SR policies.

***Table 66: Performance Measurement Functionalities***

| Functionality | Details |
|---|---|
| Profiles | You can configure different default profiles for different types of delay measurements. Use the "interfaces" delay profile type for link-delay measurement. The "sr-policy" delay profile type is used for SR policy delay measurements. Delay profile allows you to schedule probe and configure metric advertisement parameters for delay measurement. |
| Protocols | MPLS (using RFC 6374 with MPLS encap) or Two-Way Active Measurement Protocol (TWAMP) Light (using RFC 5357 with IP/UDP encap). |
| Probe and burst scheduling | Schedule probes and configure metric advertisement parameters for delay measurement. |
| Metric advertisements | Advertise measured metrics periodically using configured thresholds. Also supports accelerated advertisements using configured thresholds. |
| Measurement history and counters | Maintain packet delay and loss measurement history, session counters, and packet advertisement counters. |

The following are the means by which you can measure the performance of your network:


- Liveness Monitoring, on page 500
- Delay Measurement, on page 511
- Path Tracing in SRv6 Network, on page 548


# Liveness Monitoring

Liveness refers to the ability of the network to confirm that a specific path, segment, or a node is operational and capable of forwarding packets. Liveness checks are essential for maintaining network availability and reliability.

### Benefits

- **Fault Detection**: You can quickly identify if a device is down, which allows for immediate response and troubleshooting.
- **Load Balancing**: You can identify if the devices in a network are live, so work can be distributed more evenly across the network, preventing overloading of specific components and improving overall performance.
- **System Health**: You can provide an ongoing snapshot of a system's health, helping to identify potential issues before they become significant problems.
- **Maintenance Planning**: Liveness information can also help with maintenance planning, as system administrators can understand which components are live or down and plan maintenance and downtime accordingly without significant disruption to services.
- **Security**: Regular liveness checks can also play a role in maintaining network security. Administrators can take proactive steps to mitigate the damage and prevent future incidents by identifying unusual activity that might indicate a security breach or attack.

You can determine liveness for SR Policy and IP Endpoint.

# IP Endpoint Liveness Monitoring

*Table 67: Feature History Table*

| Feature Name | Release Information | Feature Description |
|---|---|---|
| IP Endpoint Delay Measurement and Liveness Monitoring | Release 7.4.1<br>Release 7.3.2 | This feature measures the end-to-end delay and monitors liveness of a specified IP endpoint node, including VRF-aware (awareness of multiple customers belonging to different VRFs).<br>This feature is supported on IPv4, IPv6, and MPLS data planes. |

The Segment Routing Performance Measurement (SR-PM) for IP endpoint liveness is a type of node liveness that involves testing whether an IP endpoint or a device identified by an IP address is available to send and receive data.

IP endpoint liveness is verified by sending a request to the IP address of the endpoint and waiting for a response. The probe could be an ICMP echo request (Ping), a TCP packet, a UDP packet, or any other type of packet that the endpoint would respond to.

- If a response is received, the endpoint is considered *live*.
- If no response is received within a certain time frame, the endpoint is considered *down* or *unreachable*.

IP endpoint dynamically measures the liveness towards a specified IP endpoint. IP endpoints can be located in a default or nondefault VRFs. IP endpoint is any device in the network a device identified by an IP address.

Liveness of an IP endpoint is verified by sending a request to the IP address of the endpoint and waiting for a response, which is referred to as a probe.

The endpoint of a probe is defined by an IP address, which can be either IPv4 or IPv6. This IP address can be any address that the sender can reach, such as a local interface or a remote node or host, either within an operator's network or accessible via a VRF.

The endpoint of a probe can be any IP address reachable by the sender. For example, a local interface or a remote node or host located within an operator's network or reachable through a VRF.

The IP address of the endpoint can be reached through an IP path, MPLS, LSP , or IP tunnel (GRE).

- When the endpoint is reachable using an MPLS LSP (for example, SR, LDP, RSVP-TE, SR Policy), the forwarding stage imposes the corresponding MPLS transport labels.
- When the endpoint is reachable via a GRE tunnel, the forwarding stage imposes the corresponding GRE header.
- When the endpoint is reachable via a VRF in an MPLS network, the forwarding stage imposes the corresponding MPLS service labels. In the forward path, the sender node uses the configured VRF for the endpoint address. In the return path, the reflector node derives the VRF based on which incoming VRF label the probe packet is received with.

You can configure the following parameters in the **performance-measurement** command:

- **Endpoint**: The endpoint of a probe is defined by an IP address, which can be either IPv4 or IPv6. This IP address can be any address that the sender can reach, such as a local interface or a remote node or host, either within an operator's network or accessible via a VRF.

  The endpoint of a probe can be any IP address reachable by the sender. For example, a local interface or a remote node or host located within an operator's network or reachable through a VRF.

  Use the **performance-measurement endpoint** command to configure a probe endpoint source and destination addresses on a sender node.

- **VRF**: You can define the endpoint point IP address belonging to a specific VRF. Use the **performance-measurement endpoint {ipv4 | ipv6} ip_addr [vrf WORD]** command to configure an endpoint to define the VRF. Endpoint segment list configuration is not supported under nondefault VRF.
  - VRF-awareness allows operators to deploy probes in the following scenarios:
    - Managed Customer Equipment (CE) scenarios:
      - PE to CE probes
      - CE to CE probes
    - Unmanaged Customer Equipment (CE) scenarios:

- PE to PE probes
- PE to PE (source from PE-CE interface) probes

- **Source address**: You can define the source of the endpoint using the endpoint specific source address and the global source address.

  Global source address configuration is applied to all the endpoints when the endpoint specific source address configuration isn't specified. endpoint specific configuration overrides all the global source address configuration for those specific endpoints for which source addresses are configured.

  For Micro-SID configuration for IPv4 endpoint sessions, if IPv6 global source address is configured, then it applies the configured global IPv6 source address for the IPv6 header in the SRv6 packet. If IPv6 global address is not configured, then It does not form a valid SRv6 packet.

  You can use the **source-address** keyword under the **performance-measurement** command to define the global source address or use the keyword under **performance-measurement endpoint** to define endpoint specific source address.

### Usage Guidelines and Limitations

- For liveness detection, the session fails to come up when the endpoint address is a regular IPv6 address in a default VRF and that is a normal loopback IP address that uses IGP path. Packets get dropped with the following message. However, this issue does not apply if a segment list is configured.

  ```
  GRE IPv6 decap qualification failed
  ```

  To mitigate this issue, you must configure the GRE tunnel on querier and responder. The following example shows how to configure GRE tunnel:

  ```
  /*Tunnel config on headend*\
  interface tunnel-ip1
  tunnel mode ipv6
  tunnel source 1::1
  tunnel destination 3::1
  !

  /*Tunnel config on tailend*\
  interface tunnel-ip1
  tunnel mode ipv6
  tunnel source 3::1
  tunnel destination 1::1
  ```

- Liveness session without segment list for an endpoint in a non-default VRF is not supported.
- SR Performance Measurement endpoint session over BVI interface is not supported.

## IP Endpoint Liveness Detection in an SR MPLS Network

IP endpoint liveness detection leverages the loopback measurement-mode. The following workflow describes the sequence of events.

1. The sender creates and transmits the PM probe packets.

   The IP destination address (DA) on the probe packets is set to the loopback value of the sender itself.

   The transmit timestamp (T1) is added to the payload.

The probe packet is encapsulated with the label corresponding to the endpoint.

2. The network delivers the PM probe packets following the LSP toward the endpoint.
3. The end-point receives the PM probe packets.

   Packets are forwarded back to the sender based on the forwarding entry associated with the IP DA of the PM probe packet. If an LSP exists, the probe packet is encapsulated with the label of the sender.
4. The sender node receives the PM probe packets.

   The received timestamp (T4) stored.

   If the sender node doesn't receive the specified number of probe packets (based on the configured multiplier), the sender node declares the PM session as down.

The following figure illustrates a liveness detection probe toward an IP endpoint learned by the IGP. The network interconnecting the sender and reflector provides MPLS connectivity with Segment Routing.

The liveness detection multiplier is set to 5 to specify the number of consecutive missed probe packets before the PM session is declared as down.

***Figure 32: IP Endpoint Liveness Detection***

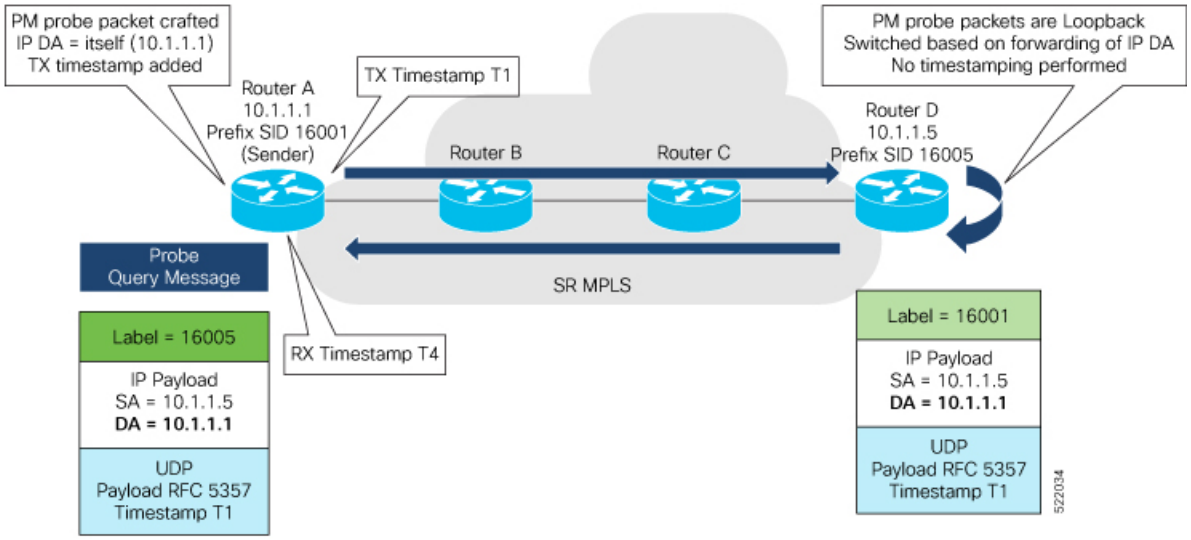


## Configuration Example

```
RouterA(config)# performance-measurement
RouterA(config-perf-meas)# endpoint ipv4 10.1.1.5
RouterA(config-pm-ep)# source-address ipv4 10.1.1.1
RouterA(config-pm-ep)# liveness-detection
RouterA(config-pm-ep-ld)# exit
RouterA(config-pm-ep)# exit
RouterA(config-perf-meas)# liveness-profile endpoint default
RouterA(config-pm-ld-ep)# liveness-detection
RouterA(config-pm-ld-ep-ld)# multiplier 5
RouterA(config-pm-ld-ep-ld)# exit
```

### Running Configuration

```
performance-measurement
 endpoint ipv4 10.1.1.5
  source-address ipv4 10.1.1.1
  liveness-detection
  !
 !
 liveness-profile endpoint default
  liveness-detection
   multiplier 5
  !

 !
!
end
```

### Verification

```
RouterA# show performance-measurement endpoint ipv4 10.1.1.5

-------------------------------------------------------------------------------
0/RSP0/CPU0
-------------------------------------------------------------------------------

Endpoint name: IPv4-10.1.1.5-vrf-default
  Source address              : 10.1.1.1
  VRF name                    : default
  Liveness Detection          : Enabled
  Profile Keys:
    Profile name              : default
    Profile type              : Endpoint Liveness Detection

  Segment-list                : None
  Session State: Down
  Missed count: 0
```

# SR Policy Liveness Monitoring

*Table 68: Feature History Table*

| Feature Name | Release Information | Feature Description |
|---|---|---|
| SR Performance Measurement Named Profiles | Release 7.3.1 | You can use this feature to create specific performance measurement delay and liveness profiles, and associate it with an SR policy.<br><br>This way, a delay or liveness profile can be associated with a policy for which the performance measurement probes are enabled, and performance measurement is precise, and enhanced.<br><br>The **performance-measurement delay-profile sr-policy** command was updated with the **name** *profile* keyword-argument combination.<br><br>The **performance-measurement liveness-profile sr-policy** command was updated with the **name** *profile* keyword-argument combination.<br><br>The **performance-measurement delay-measurement** command was updated with **delay-profile name** *profile*.<br><br>The **performance-measurement liveness-detection** command was updated with **liveness-profile name** *profile* |
| SR Policy Liveness Monitoring | Release 7.3.1 | This feature allows you to verify end-to-end traffic forwarding over an SR Policy candidate path by periodically sending performance monitoring packets. |

SR Policy liveness monitoring allows you to verify end-to-end traffic forwarding over an SR Policy candidate path by periodically sending performance monitoring (PM) packets. The head-end router sends PM packets to the SR policy's endpoint router, which sends them back to the head-end without any control-plane dependency on the endpoint router.

The following are benefits to using SR-PM liveness monitoring:

- Allows both liveness monitoring and delay measurement using a single-set of PM packets as opposed to running separate monitoring sessions for each purpose. This improves the overall scale by reducing the number of PM sessions required.

- Eliminates network and device complexity by reducing the number of monitoring protocols on the network (for example, no need for Bidirectional Failure Detection [BFD]). It also simplifies the network and device operations by not requiring any signaling to bootstrap the performance monitoring session.
- Improves interoperability with third-party nodes because signaling protocols aren't required. In addition, it leverages the commonly supported TWAMP protocol for packet encoding.
- Improves liveness detection time because PM packets aren't punted on remote nodes
- Provides a common solution that applies to data-planes besides MPLS, including IPv4, IPv6, and SRv6.

### How it works?

The workflow associated with liveness detection over SR policy is described in the following sequence.

Consider an SR policy programmed at head-end node router 1 towards end-point node router 5. This SR policy is enabled for liveness detection using the loopback measurement-mode.

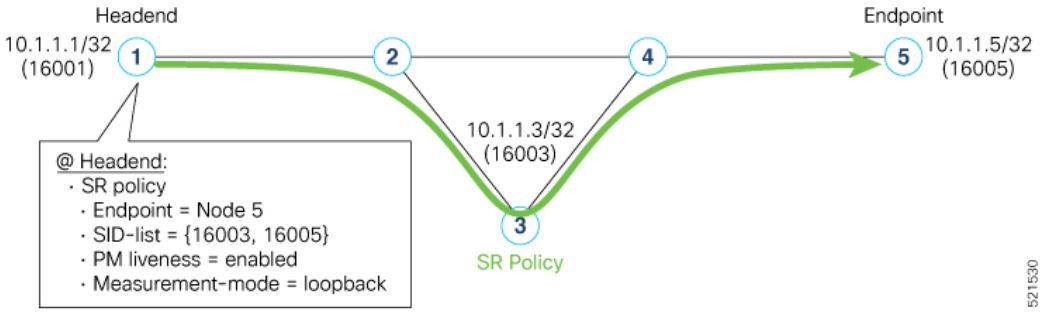


- **A**: The head-end node creates and transmits the PM probe packets.

  The IP destination address (DA) on the probe packets is set to the loopback value of the head-end node itself.

  A transmit (Tx) timestamp is added to the payload.

  Optionally, the head-end node may also insert extra encapsulation (labels) to enforce the reverse path at the endpoint node.

  Finally, the packet is injected into the data-plane using the same encapsulation (label stack) of that of the SR policy being monitored.

- **B**: The network delivers the PM probe packets as it would user traffic over the SR policy.
- **C**: The end-point node receives the PM probe packets.

  Packets are switched back based on the forwarding entry associated with the IP DA of the packet. This would typically translate to the end-point node pushing the prefix SID label associated with the head-end node.

  If the head-end node inserted label(s) for the reverse path, then the packets are switched back at the end-point node based on the forwarding entry associated with the top-most reverse path label.

- **D**: Headend node receives the PM probe packets.

  A received (Rx) timestamp stored.

  If the head-end node receives the PM probe packets, the head-end node assume that the SR policy active candidate path is up and working.

If the head-end node doesn't receive the specified number of consecutive probe packets (based on configured multiplier), the head-end node assumes the candidate path is down and a configured action is trigerred.

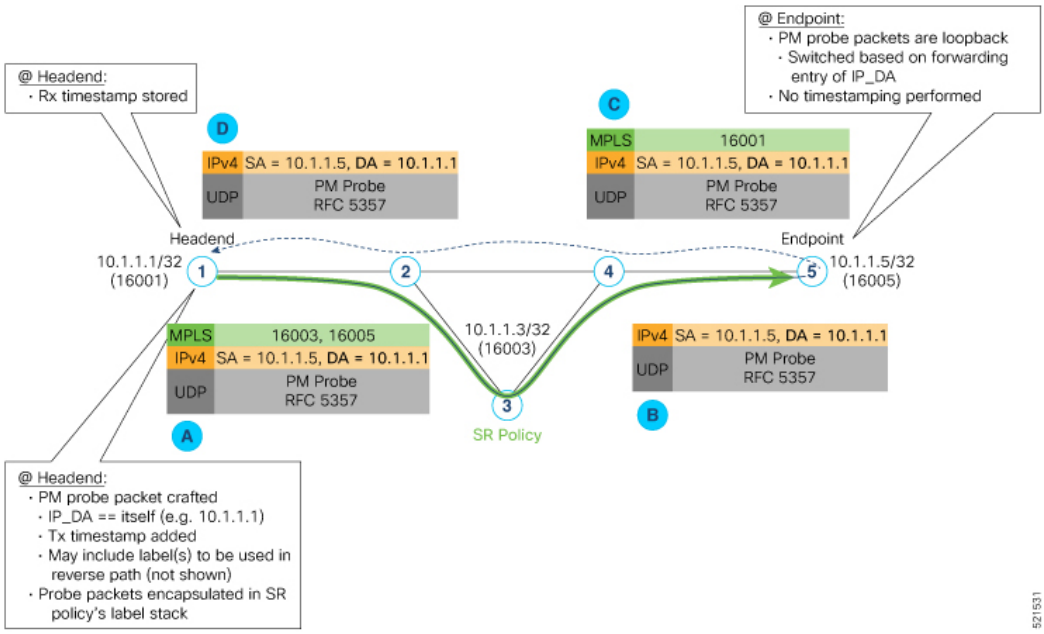


### Usage Guidelines and Limitations

The following usage guidelines and limitations apply:

- SR-PM liveness-detection over SR Policy is supported on manually configured SR Policies and On-Demand SR Policies (ODN).
- SR-PM liveness-detection over SR Policy is not supported on PCE-initiated SR Policies.
- SR-PM liveness-detection and delay-measurement aren't supported together
- When liveness-profile isn't configured, SR Policies use the default values for the liveness-detection profile parameters.

## Configure SR Policy Liveness Monitoring in an MPLS Network

Configuring SR Policy liveness monitoring involves the following steps:

- Configuring a performance measurement liveness profile to customize generic probe parameters
- Enabling liveness monitoring under SR Policy by associating a liveness profile, and customizing SR policy-specific probe parameters

Liveness monitoring parameters are configured under **performance-measurement liveness-profile** sub-mode. The following parameters are configurable:

- **liveness-profile** {**sr-policy default** | **name** *name*}

  Parameters defined under the **sr-policy default** liveneness-profile apply to any SR policy with liveness monitoring enabled and that does not reference a non-default (named) liveneness-profile.

- **probe**: Configure the probe parameters.
- **tx-interval**: Interval for sending probe packet. The default value is 3000000 microseconds and the range is from 30000 to 15000000 microseconds.
- **tos dscp** *value*: The default value is 48 and the range is from 0 to 63. You can modify the DSCP value of the probe packets, and use this value to priortize the probe packets from headend to tailend.
- **sweep destination ipv4 127.*x.x.x* range** *range*: Configure SR Policy ECMP IP-hashing mode. Specifiy the number of IP addresses to sweep. The range is from 0 (default, no sweeping) to 128. The option is applicable to IPv4 packets.

**Note** The destination IPv4 headendaddress 127.x.x.x – 127.y.y.y is used in the Probe messages to take advantages of 3-tuple IP hashing (source-address, destination-address, and local router ID) for ECMP paths of SR-MPLS Policy.

The destination IPv4 address must be 127/8 range (loopback), otherwise it will be rejected.

**Note** One PM session is always created for the actual endpoint address of the SR Policy.

- **liveness-detection**: Configure the liveness-detection parameters:
- **multiplier**: Number of consecutive missed probe packets before the PM session is declared as down. The range is from 2 to 10, and the default is 3.

**Note** The detection-interval is equal to (tx-interval * multiplier).

### Enabling Liveness Monitoring under SR Policy

Enable liveness monitoring under SR Policy, associate a liveness-profile, and configure SR Policy-specific probe parameters under the **segment-routing traffic-eng policy performance-measurement** sub-mode. The following parameters are configurable:

- **liveness-detection**: Enables end-to-end SR Policy Liveness Detection for all segment-lists of the active and standby candidate-path that are in the forwarding table.
- **liveness-profile name** *name*: Specifies the profile name for named profiles.
- **invalidation-action {down | none}**:
  - **Down (default)**: When the PM liveness session goes down, the candidate path is immediately operationally brought down.
  - **None**: When the PM liveness session goes down, no action is taken. If logging is enabled, the failure is logged but the SR Policy operational state isn't modified.
- **logging session-state-change**: Enables Syslog messages when the session state changes.

- **reverse-path label** {*BSID-value* | *NODE-SID-value*}: Specifies the MPLS label to be used for the reverse path for the reply. If you configured liveness detection with ECMP hashing, you must specify the reverse path. The default reverse path uses IP Reply.
  - *BSID-value*: The Binding SID (BSID) label for the reverse SR Policy. (This is practical for manual SR policies with a manual BSID.)
  - *NODE-SID-value*: The absolute SID label of the (local) Sender Node to be used for the reverse path for the reply.

## Configuration Examples

### Configure a Default SR-Policy PM Liveness-Profile

The following example shows a default sr-policy liveness-profile:

```
RP/0/RSP0/CPU0:ios(config)# performance-measurement
RP/0/RSP0/CPU0:ios(config-perf-meas)# liveness-profile sr-policy default
RP/0/RSP0/CPU0:ios(config-pm-ld-srpolicy)# probe

RP/0/RSP0/CPU0:ios(config-pm-ld-srpolicy-probe)# tx-interval 150000
RP/0/RSP0/CPU0:ios(config-pm-ld-srpolicy-probe)# tos dscp 52
RP/0/RSP0/CPU0:ios(config-pm-ld-srpolicy-probe)# exit
RP/0/RSP0/CPU0:ios(config-pm-ld-srpolicy)# liveness-detection
RP/0/RSP0/CPU0:ios(config-pm-ld-srpolicy-ld)# multiplier 5
```

Running Configuration:

```
performance-measurement
 liveness-profile sr-policy default
  liveness-detection
   multiplier 5
  !
  probe
   tos dscp 52
   tx-interval 150000
  !
 !
!
end
```

### Configure a Named (Non-Default) SR-Policy PM Liveness-Profile

The following example shows a named sr-policy liveness-profile:

```
Router(config)# performance-measurement
Router(config-perf-meas)# liveness-profile name sample-profile
Router(config-pm-ld-profile)# probe
Router(config-pm-ld-probe)# tx-interval 150000
Router(config-pm-ld-probe)# tos dscp 52
Router(config-pm-ld-probe)# exit

Router(config-pm-ld-profile)# liveness-detection
Router(config-pm-ld-profile-ld)# multiplier 5
Router(config-pm-ld-profile-ld)#commit
```

### Running Configuration:

```
performance-measurement
 liveness-profile name sample-profile
```

```
  liveness-detection
   multiplier 5
  !
  probe
   tos dscp 52
   tx-interval 150000
  !
 !
!
end
```

### Configure a SR-Policy PM Liveness-Profile with Sweep Parameters

The following example shows a named liveness-profile with sweep parameters:

```
Router(config)# performance-measurement
Router(config-perf-meas)# liveness-profile name sample-profile
Router(config-pm-ld-profile)# probe
Router(config-pm-ld-probe)# tx-interval 150000
Router(config-pm-ld-probe)# tos dscp 52
Router(config-pm-ld-probe)# sweep
Router(config-pm-ld-probe-sweep)# destination ipv4 127.0.0.1 range 25
Router(config-pm-ld-probe-sweep)# exit
Router(config-pm-ld-probe)# exit

Router(config-pm-ld-profile)# liveness-detection
Router(config-pm-ld-profile-ld)# multiplier 5
Router(config-pm-ld-profile-ld)#commit
```

Running Configuration

```
performance-measurement
 liveness-profile name sample-profile
  liveness-detection
   multiplier 5
  !
  probe
   tos dscp 52
   sweep
    destination ipv4 127.0.0.1 range 25
   !
   tx-interval 150000
  !
 !
!
end
```

### Enable Liveness Monitoring Under SR Policy

The following example shows how to enable liveness monitoring under SR Policy, associate a liveness-profile, and configure the invalidation action:

```
RP/0/RSP0/CPU0:ios(config)# segment-routing traffic-eng
RP/0/RSP0/CPU0:ios(config-sr-te)# policy FOO
RP/0/RSP0/CPU0:ios(config-sr-te-policy)# performance-measurement
RP/0/RSP0/CPU0:ios(config-sr-te-policy-perf-meas)# liveness-detection
RP/0/RSP0/CPU0:ios(config-sr-te-policy-live-detect)# liveness-profile name sample-profile
RP/0/RSP0/CPU0:ios(config-sr-te-policy-live-detect)# invalidation-action none
```

Running Config

```
segment-routing
 traffic-eng
  policy FOO
   performance-measurement
    liveness-detection
```

```
     liveness-profile name sample-profile
     invalidation-action none
    !
   !
  !
 !
!
end
```

### Enable Liveness Monitoring under SR Policy with Optional Parameters

The following example shows how to enable liveness monitoring under SR Policy, associate a liveness-profile, and configure reverse path label and session logging:

```
RP/0/RSP0/CPU0:ios(config)# segment-routing traffic-eng
RP/0/RSP0/CPU0:ios(config-sr-te)# policy BAA
RP/0/RSP0/CPU0:ios(config-sr-te-policy)# performance-measurement
RP/0/RSP0/CPU0:ios(config-sr-te-policy-perf-meas)# liveness-detection
RP/0/RSP0/CPU0:ios(config-sr-te-policy-live-detect)# liveness-profile name sample-profile
RP/0/RSP0/CPU0:ios(config-sr-te-policy-live-detect)# invalidation-action down
RP/0/RSP0/CPU0:ios(config-sr-te-policy-live-detect)# logging session-state-change
RP/0/RSP0/CPU0:ios(config-sr-te-policy-live-detect)# exit
RP/0/RSP0/CPU0:ios(config-sr-te-policy-perf-meas)# reverse-path label 16001
```

Running Config

```
segment-routing
 traffic-eng
  policy BAA
   performance-measurement
    liveness-detection
     logging
      session-state-change
     !
     liveness-profile name sample-profile
     invalidation-action down
    !
    reverse-path
     label 16001
    !
   !
  !
 !
!
end
```

# Delay Measurement

Delay measuremnt is a mechanism used to measure the latency or delay experienced by data packets when they traverse a network.

The PM for delay measuremnt uses the IP/UDP packet format defined in RFC 5357 (TWAMP-Light) for probes. Two-Way Active Measurement Protocol (TWAMP) adds two-way or round-trip measurement capabilities. TWAMP employs time stamps applied at the echo destination (reflector) to enable greater accuracy. In the case of TWAMP Light, the Session-Reflector doesn’t necessarily know about the session state. The Session-Reflector simply copies the Sequence Number of the received packet to the Sequence Number field of the reflected packet. The controller receives the reflected test packets and collects two-way metrics. This architecture allows for collection of two-way metrics.

### Benefits

- Network Troubleshooting: You can quickly and easily identify areas in your network with high delay and resolve network problems using delay measurement.
- Network Planning and Optimization: You can easily understand the performance of your network under various conditions and design a network that can handle expected traffic loads.
- Quality of Service (QoS): You can ensure quality of service standards are being met by continuously monitoring the delay in your network.

### Supported Delay Measurement Methods

You can measure delay using the following methods:

- Link Delay Measurement, on page 515 Use to monitor delay experienced by data packets in a single link or path between two nodes in a network.
- Delay Measurement for IP Endpoint: Use to monitor the amount of time it takes for a data packet to travel from a source device to a specific IP endpoint within a network.
- SR Policy End-to-End Delay Measurement , on page 540: Use to to monitor the end-to-end delay experienced by the traffic sent over an SR policy.

## Measurement Modes

The following table compares the different hardware and timing requirements for the measurement modes supported in SR PM.

*Table 69: Measurement Mode Requirements*

| Measurement Mode | Sender:<br>PTP-Capable HW and HW Timestamping | Reflector:<br>PTP-Capable HW and HW Timestamping | PTP Clock Synchronization between Sender and Reflector |
|---|---|---|---|
| One-way | Required | Required | Required |
| Two-way | Required | Required | Not Required |
| Loopback | Required | Not Required | Not Required |

### One-Way Measurement Mode

One-way measurement mode provides the most precise form of one-way delay measurement. PTP-capable hardware and hardware timestamping are required on both Sender and Reflector, with PTP Clock Synchronization between Sender and Reflector.

Delay measurement in one-way mode is calculated as (T2 – T1).

*Figure 33: One-Way*

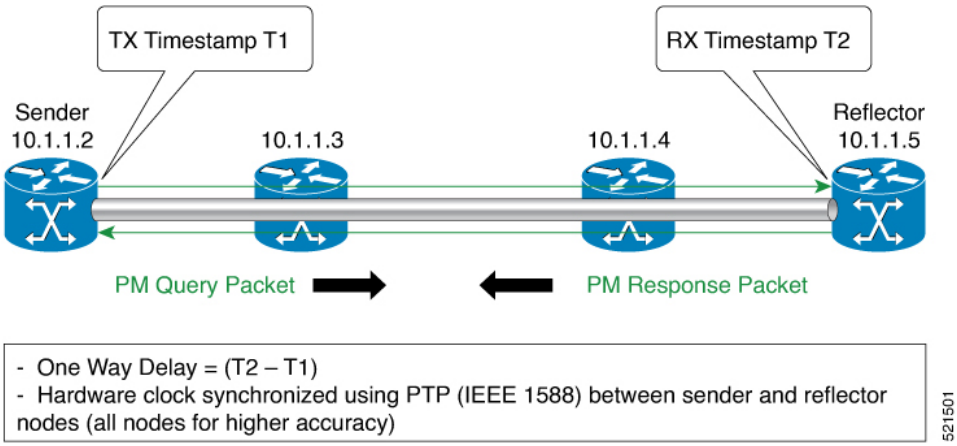


The PM query and response for one-way delay measurement can be described in the following steps:

1. The local-end router sends PM query packets periodically to the remote side once the egress line card on the router applies timestamps on packets.
2. The ingress line card on the remote-end router applies time-stamps on packets as soon as they are received.
3. The remote-end router sends the PM packets containing time-stamps back to the local-end router.
4. One-way delay is measured using the time-stamp values in the PM packet.

### Two-Way Measurement Mode

Two-way meaurement mode provides two-way measurements. PTP-capable hardware and hardware timestamping are required on both Sender and Reflector, but PTP clock synchronization between Sender and Reflector is not required.

Delay measurement in two-way mode is calculated as ((T4 – T1) – (T3 – T2))/2

*Figure 34: Two-Way*

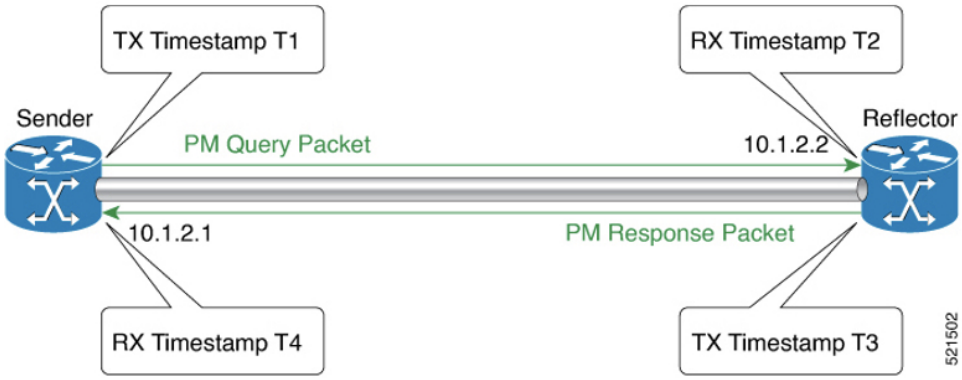


The PM query and response for two-way delay measurement can be described in the following steps:

1. The local-end router sends PM query packets periodically to the remote side once the egress line card on the router applies timestamps on packets.

2. Ingress line card on the remote-end router applies time-stamps on packets as soon as they are received.
3. The remote-end router sends the PM packets containing time-stamps back to the local-end router. The remote-end router time-stamps the packet just before sending it for two-way measurement.
4. The local-end router time-stamps the packet as soon as the packet is received for two-way measurement.
5. Delay is measured using the time-stamp values in the PM packet.

### Loopback Measurement Mode

Loopback meaurement mode provides two-way and one-way measurements. PTP-capable hardware and hardware timestamping are required on the Sender, but are not required on the Reflector.

Delay measurements in Loopback mode are calculated as follows:

- Round-Trip Delay = (T4 – T1)
- One-Way Delay = Round-Trip Delay/2

***Figure 35: Loopback***

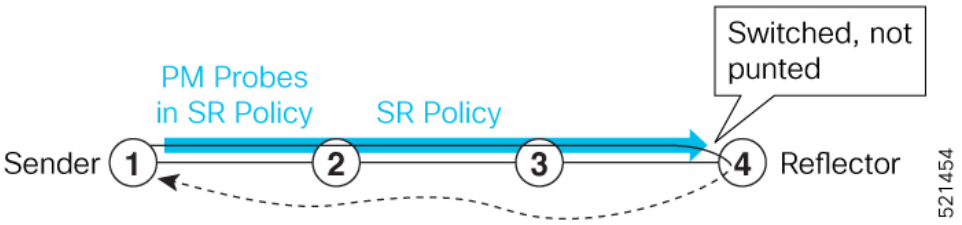


The PM query and response for Loopback delay measurement can be described in the following steps:

1. The local-end router sends PM probe packets periodically on the SR Policy.
2. The probe packets are loopback on the endpoint node (not punted), with no timestamping on endpoint node.
3. Round-trip Delay = T4 – T1.

# Link Delay Measurement

*Table 70: Feature History Table*

| Feature Name | Release Information | Feature Description |
|---|---|---|
| Link Delay Measurement with IPv6 Link Local Address | Release 7.3.1 | The performance measurement for link delay determines the source and destination IP addresses used in the OAM packet based on the IP address of the interface, where the delay measurement operation is enabled. This feature enables using the IPv6 link-local address as the OAM packet source IP address, when no IPv4 or IPv6 address is configured in the interface. |

The PM for link delay uses the IP/UDP packet format defined in RFC 5357 (TWAMP-Light) for probes. Two-Way Active Measurement Protocol (TWAMP) adds two-way or round-trip measurement capabilities. TWAMP employs time stamps applied at the echo destination (reflector) to enable greater accuracy. In the case of TWAMP Light, the Session-Reflector doesn't necessarily know about the session state. The Session-Reflector simply copies the Sequence Number of the received packet to the Sequence Number field of the reflected packet. The controller receives the reflected test packets and collects two-way metrics. This architecture allows for collection of two-way metrics.

### Usage Guidelines and Restrictions for PM for Link Delay

The following restrictions and guidelines apply for the PM for link delay feature for different links.

- For broadcast links, only point-to-point (P2P) links are supported. P2P configuration on IGP is required for flooding the value.
- For link bundles, the hashing function may select a member link for forwarding but the reply may come from the remote line card on a different member link of the bundle.
- For one-way delay measurement, clocks should be synchronized on two end-point nodes of the link using PTP.
- Link delay measurement is supported on IPv4 unnumbered interfaces. An IPv4 unnumbered interface is identified by a node ID (a loopback address) and the local SNMP index assigned to the interface. Note that the reply messages could be received on any interface, since the packets are routed at the responder based on the loopback address used to identify the link.

### Configuration Example: PM for Link Delay

This example shows how to configure performance-measurement functionalities for link delay as a global default profile. The default values for the different parameters in the PM for link delay is given as follows:

- **probe measurement mode**: The default measurement mode for probe is two-way delay measurement. If you are configuring one-way delay measurement, hardware clocks must be synchronized between the local-end and remote-end routers using precision time protocol (PTP). See Measurement Modes, on page 512 for more information.

- **protocol**:
  - **twamp-light**: Interface delay measurement using RFC 5357 with IP/UDP encap. This is the default protocol.
  - **pm-mpls**: Interface delay measurement using RFC6374 with MPLS encap.
- **protocol**: Interface delay measurement using RFC 5357 with IP/UDP encap (TWAMP-Light).
- **tx-interval**: Interval for sending probe packet. The default value is 3000000 microseconds and the range is from 30000 to 15000000 microseconds.
- **computation interval**: Interval for metric computation. Default is 30 seconds; range is 1 to 3600 seconds.
- **periodic advertisement**: Periodic advertisement is enabled by default.
- **periodic-advertisement interval**: The default value is 120 seconds and the interval range is from 30 to 3600 seconds.
- **periodic-advertisement threshold**: Checks the minimum-delay metric change for threshold crossing for periodic advertisement. The default value is 10 percent and the range is from 0 to 100 percent.
- **periodic-advertisement minimum change**: The default value is 1000 microseconds (usec) and the range is from 0 to 100000 microseconds.
- **accelerated advertisement**: Accelerated advertisement is disabled by default.
- **accelerated-advertisement threshold**: Checks the minimum-delay metric change for threshold crossing for accelerated advertisement. The default value is 20 percent and the range is from 0 to 100 percent.
- **accelerated-advertisement minimum change**: The default value is 500 microseconds and the range is from 0 to 100000 microseconds.

```
RP/0/0/CPU0:router(config)# performance-measurement delay-profile interfaces default
RP/0/0/CPU0:router(config-pm-dm-intf)# probe
RP/0/0/CPU0:router(config-pm-dm-intf-probe)# measurement-mode one-way
RP/0/0/CPU0:router(config-pm-dm-intf-probe)# tx-interval 30000
RP/0/0/CPU0:router(config-pm-dm-intf-probe)# computation-interval 60
RP/0/0/CPU0:router(config-pm-dm-intf-probe)# exit

RP/0/0/CPU0:router(config-pm-dm-intf)# advertisement periodic
RP/0/0/CPU0:router(config-pm-dm-intf-adv-per)# interval 120
RP/0/0/CPU0:router(config-pm-dm-intf-adv-per)# threshold 20
RP/0/0/CPU0:router(config-pm-dm-intf-adv-per)# minimum-change 1000
RP/0/0/CPU0:router(config-pm-dm-intf-adv-per)# exit

RP/0/0/CPU0:router(config-pm-dm-intf)# advertisement accelerated
RP/0/0/CPU0:router(config-pm-dm-intf-adv-acc)# threshold 30
RP/0/0/CPU0:router(config-pm-dm-intf-adv-acc)# minimum-change 1000
RP/0/0/CPU0:router(config-pm-dm-intf-adv-per)# exit
```

### Configure the UDP Destination Port

Configuring the UDP port for TWAMP-Light protocol is optional. By default, PM uses port 862 as the TWAMP-reserved UDP destination port for delay.

The UDP port is configured for each PM measurement probe type (delay, loss, protocol, authentication mode, etc.) on querier and responder nodes. If you configure a different UDP port, the UDP port for each PM measurement probe type must match on the querier and the responder nodes.

**Note** The same UDP destination port is used for delay measurement for links and SR Policy.

This example shows how to configure the UDP destination port for delay.

```
Router(config)# performance-measurement
Router(config-perf-meas)# protocol twamp-light
Router(config-pm-protocol)# measurement delay unauthenticated
Router(config-pm-proto-mode)# querier-dst-port 12000
```

### Enable PM for Link Delay Over an Interface

This example shows how to enable PM for link delay over an interface.

```
RP/0/0/CPU0:router(config)# performance-measurement
RP/0/0/CPU0:router(config-perf-meas)# interface TenGigE0/0/0/0
RP/0/0/CPU0:router(config-pm-intf)# next-hop ipv4 10.10.10.2 // Optional IPv4 or IPv6
next-hop address
RP/0/0/CPU0:router(config-pm-intf)# delay-measurement
RP/0/0/CPU0:router(config-pm-intf-dm)# exit
```

The source and destination IP addresses used in the OAM packet are determined by the IP address present on the interface where the delay-measurement operation is enabled and the setting of the optional **next-hop** address.

When the **next-hop** address is not specified, the following rules apply to determine the source and destination IP addresses used in the OAM packet:

- If an IPv4 address is configured under the interface, then:
  - OAM packet source IP address = Interface's IPv4 address
  - OAM packet destination IP address = 127.0.0.0
- Else, if an IPv6 global address is configured under the interface, then:
  - OAM packet source IP address = Interface's IPv6 global address
  - OAM packet destination IP address = 0::ff:127.0.0.0
- Else, if an IPv6 link-local address is assigned to the interface, then:
  - OAM packet source IP address = Interface's IPv6 link-local address
  - OAM packet destination IP address = 0::ff:127.0.0.0

When the **next-hop** {**ipv4** | **ipv6**} address is configured, the following rules apply to determine the source and destination IP addresses used in the OAM packet:

- If a next-hop IPv4 address is configured, then:
  - OAM packet source IP address = Interface's IPv4 address

- OAM packet destination IP address = Configured next-hop IPv4 address

**Note** If there is no IPv4 address configured under the interface, then the delay-measurement probe does not send OAM packets.

- If a next-hop IPv6 address is configured, then:
  - OAM packet source IP address = Interface's IPv6 global address
  - OAM packet destination IP address = Configured next-hop IPv6 address

**Note** If there is no IPv6 global address configured under the interface, then the delay-measurement probe does not send OAM packets.

This example shows how to enable PM for link delay over an interface with IPv4 address configured:

```
interface TenGigE0/0/0/0
 ipv4 address 10.10.10.1 255.255.255.0

performance-measurement
 interface TenGigE0/0/0/0
  delay-measurement
```

This example shows how to enable PM for link delay over an interface IPv6 address configured:

```
interface TenGigE0/0/0/0
 ipv6 address 10:10:10::1/64

performance-measurement
 interface TenGigE0/0/0/0
  delay-measurement
```

This example shows how to enable PM for link delay over an interface with a specified next-hop IPv4 address:

```
interface TenGigE0/0/0/0
 ipv4 address 10.10.10.1 255.255.255.0

performance-measurement
 interface TenGigE0/0/0/0
  next-hop ipv4 10.10.10.2
  delay-measurement
```

This example shows how to enable PM for link delay over an interface with a specified next-hop IPv6 address:

```
interface TenGigE0/0/0/0
 ipv6 address 10:10:10::1/64

performance-measurement
 interface TenGigE0/0/0/0
  next-hop ipv6 10:10:10::2
```

```
  delay-measurement
```

This example shows how to enable PM for link delay over an interface with only IPv6 link-local address:

```
interface TenGigE0/0/0/0
 ipv6 enable

performance-measurement
 interface TenGigE0/0/0/0
  delay-measurement
```

### Verification

```
RP/0/0/CPU0:router# show performance-measurement profile default interface
Thu Dec 12 14:13:16.029 PST

-------------------------------------------------------------------------------
0/0/CPU0
-------------------------------------------------------------------------------
Interface Delay-Measurement:
  Profile configuration:
    Measurement Type                          : Two-Way
    Probe computation interval                : 30 (effective: 30) seconds
    Type of services                          : Traffic Class: 6, DSCP: 48
    Burst interval                            : 3000 (effective: 3000) mSec
    Burst count                               : 10 packets
    Encap mode                                : UDP
    Payload Type                              : TWAMP-light
    Destination sweeping mode                 : Disabled
    Periodic advertisement                    : Enabled
      Interval                                : 120 (effective: 120) sec
      Threshold                               : 10%
      Minimum-Change                          : 500 uSec
    Advertisement accelerated                 : Disabled
    Threshold crossing check                  : Minimum-delay
```

```
RP/0/0/CPU0:router# show performance-measurement summary detail location 0/2/CPU0

Thu Dec 12 14:09:59.162 PST

-------------------------------------------------------------------------------
0/2/CPU0
-------------------------------------------------------------------------------
Total interfaces                              : 1
Total SR Policies                             : 0
Total RSVP-TE tunnels                         : 0
Total Maximum PPS                             : 2000 pkts/sec
Total Interfaces PPS                          : 0 pkts/sec
Maximum Allowed Multi-hop PPS                 : 2000 pkts/sec
Multi Hop Requested PPS                       : 0 pkts/sec (0% of max allowed)
Dampened Multi Hop Requested PPS              : 0% of max allowed
Inuse Burst Interval Adjustment Factor        : 100% of configuration


Interface Delay-Measurement:
  Total active sessions                       : 1
  Counters:
    Packets:
      Total sent                              : 26
      Total received                          : 26
    Errors:
```

```
        TX:
          Reason interface down                : 0
          Reason no MPLS caps                  : 0
          Reason no IP address                 : 0
          Reason other                         : 0
        RX:
          Reason negative delay                : 0
          Reason delay threshold exceeded      : 0
          Reason missing TX timestamp          : 0
          Reason missing RX timestamp          : 0
          Reason probe full                    : 0
          Reason probe not started             : 0
          Reason control code error            : 0
          Reason control code notif            : 0
    Probes:
      Total started                            : 3
      Total completed                          : 2
      Total incomplete                         : 0
      Total advertisements                     : 0

SR Policy Delay-Measurement:
  Total active sessions                        : 0
  Counters:
    Packets:
      Total sent                               : 0
      Total received                           : 0
    Errors:
        TX:
          Reason interface down                : 0
          Reason no MPLS caps                  : 0
          Reason no IP address                 : 0
          Reason other                         : 0
        RX:
          Reason negative delay                : 0
          Reason delay threshold exceeded      : 0
          Reason missing TX timestamp          : 0
          Reason missing RX timestamp          : 0
          Reason probe full                    : 0
          Reason probe not started             : 0
          Reason control code error            : 0
          Reason control code notif            : 0
    Probes:
      Total started                            : 0
      Total completed                          : 0
      Total incomplete                         : 0
      Total advertisements                     : 0

RSVP-TE Delay-Measurement:
  Total active sessions                        : 0
  Counters:
    Packets:
      Total sent                               : 0
      Total received                           : 0
    Errors:
        TX:
          Reason interface down                : 0
          Reason no MPLS caps                  : 0
          Reason no IP address                 : 0
          Reason other                         : 0
        RX:
          Reason negative delay                : 0
          Reason delay threshold exceeded      : 0
          Reason missing TX timestamp          : 0
          Reason missing RX timestamp          : 0
```

```
          Reason probe full                    : 0
          Reason probe not started             : 0
          Reason control code error            : 0
          Reason control code notif            : 0
    Probes:
      Total started                            : 0
      Total completed                          : 0
      Total incomplete                         : 0
      Total advertisements                     : 0

Global Delay Counters:
  Total packets sent                           : 26
  Total query packets received                 : 26
  Total invalid session id                     : 0
  Total missing session                        : 0
```

```
RP/0/0/CPU0:router# show performance-measurement interfaces detail
Thu Dec 12 14:16:09.692 PST

-------------------------------------------------------------------------------
0/0/CPU0
-------------------------------------------------------------------------------

-------------------------------------------------------------------------------
0/2/CPU0
-------------------------------------------------------------------------------

Interface Name: GigabitEthernet0/2/0/0 (ifh: 0x1004060)
  Delay-Measurement                 : Enabled
  Loss-Measurement                  : Disabled
  Configured IPv4 Address           : 10.10.10.2
  Configured IPv6 Address           : 10:10:10::2
  Link Local IPv6 Address           : fe80::3a:6fff:fec9:cd6b
  Configured Next-hop Address       : Unknown
  Local MAC Address                 : 023a.6fc9.cd6b
  Next-hop MAC Address              : 0291.e460.6707
  Primary VLAN Tag                  : None
  Secondary VLAN Tag                : None
  State                             : Up

  Delay Measurement session:
    Session ID          : 1

    Last advertisement:
      Advertised at: Dec 12 2019 14:10:43.138 (326.782 seconds ago)
      Advertised reason: First advertisement
      Advertised delays (uSec): avg: 839, min: 587, max: 8209, variance: 297

    Next advertisement:
      Threshold check scheduled in 1 more probe (roughly every 120 seconds)
      Aggregated delays (uSec): avg: 751, min: 589, max: 905, variance: 112
      Rolling average (uSec): 756

    Current Probe:
      Started at Dec 12 2019 14:15:43.154 (26.766 seconds ago)
      Packets Sent: 9, received: 9
      Measured delays (uSec): avg: 795, min: 631, max: 1199, variance: 164
      Next probe scheduled at Dec 12 2019 14:16:13.132 (in 3.212 seconds)
      Next burst packet will be sent in 0.212 seconds
      Burst packet sent every 3.0 seconds
      Probe samples:
        Packet Rx Timestamp       Measured Delay (nsec)
        Dec 12 2019 14:15:43.156          689223
        Dec 12 2019 14:15:46.156          876561
        Dec 12 2019 14:15:49.156          913548
```

```
Dec 12 2019 14:15:52.157         1199620
Dec 12 2019 14:15:55.156          794008
Dec 12 2019 14:15:58.156          631437
Dec 12 2019 14:16:01.157          656440
Dec 12 2019 14:16:04.157          658267
Dec 12 2019 14:16:07.157          736880
```

You can also use the following commands for verifying the PM for link delay on the local-end router.

| Command | Description |
|---|---|
| **show performance-measurement history probe interfaces** [*interface*] | Displays the PM link-delay probe history for interfaces. |
| **show performance-measurement history aggregated interfaces** [*interface*] | Displays the PM link-delay aggregated history for interfaces. |
| **show performance-measurement history advertisement interfaces** [*interface*] | Displays the PM link-delay advertisement history for interfaces. |
| **show performance-measurement counters** [interface *interface*] [location *location-name*] | Displays the PM link-delay session counters. |

You can also use the following commands for verifying the PM for link-delay configuration on the remote-end router.

| Command | Description |
|---|---|
| **show performance-measurement responder summary** [**location** *location-name*] | Displays the PM for link-delay summary on the remote-end router (responder). |
| **show performance-measurement responder interfaces** [*interface*] | Displays PM for link-delay for interfaces on the remote-end router. |
| **show performance-measurement responder counters** [**interface** *interface*] [**location** *location-name*] | Displays the PM link-delay session counters on the remote-end router. |

### Configure a Static Delay Value on an Interface

You can configure an interface to advertise a static delay value, instead of the measured delay value. When you configure a static delay value, the advertisement is triggered immediately. The average, minimum, and maximum advertised values will use the static delay value, with a variance of 0.

Scheduled probes will continue, and measured delay metrics will be aggregated and stored in history buffer. However, advertisement threshold checks are suppressed so that there are no advertisements of the actual measured delay values. If the configured static delay value is removed, the next scheduled advertisement threshold check will update the advertised measured delay values.

The static delay value can be configured from 1 to 16777215 microseconds (16.7 seconds).

This example shows how to configure a static delay of 1000 microseconds:

```
RP/0/0/CPU0:router(config)# performance-measurement
RP/0/0/CPU0:router(config-perf-meas)# interface TenGigE0/0/0/0
RP/0/0/CPU0:router(config-pm-intf)# delay-measurement
```

```
RP/0/0/CPU0:router(config-pm-intf-dm)# advertise-delay 1000
```

### Running Configuration

```
performance-measurement
 interface GigabitEthernet0/0/0/0
  delay-measurement
   advertise-delay 1000
  !
 !
!
```

### Verification

```
RP/0/RSP0/CPU0:ios# show performance-measurement interfaces detail

-------------------------------------------------------------------------------
0/0/CPU0
-------------------------------------------------------------------------------

Interface Name: GigabitEthernet0/0/0/0 (ifh: 0x0)
  Delay-Measurement                 : Enabled

. . .

    Last advertisement:
      Advertised at: Nov 29 2021 21:53:00.656 (7.940 seconds ago)
      Advertised reason: Advertise delay config
      Advertised delays (uSec): avg: 1000, min: 1000, max: 1000, variance: 0

. . .
```

## SR Performance Measurement Named Profiles

You can create a named performance measurement profile for delay or liveness.

### Delay Profile

This example shows how to create a named SR performance measurement delay profile.

```
Router(config)# performance-measurement delay-profile name profile2
Router(config-pm-dm-profile)# probe
Router(config-pm-dm-probe)# tx-interval 60000
Router(config-pm-dm-probe)# computation-interval 60
Router(config-pm-dm-probe)# protocol twamp-light
Router(config-pm-dm-probe)# tos dscp 63
Router(config-pm-dm-probe)# exit

Router(config-pm-dm-profile)# advertisement
Router(config-pm-dm-adv)# periodic
Router(config-pm-dm-adv-per)# interval 60
Router(config-pm-dm-adv-per)# minimum-change 1000
Router(config-pm-dm-adv-per)# threshold 20
Router(config-pm-dm-adv-per)# commit
```

Apply the delay profile for an SR Policy.

```
Router(config)# segment-routing traffic-eng
Router(config-sr-te)# policy TEST
Router(config-sr-te-policy)# color 4 end-point ipv4 10.10.10.10
Router(config-sr-te-policy)# performance-measurement
Router(config-sr-te-policy-perf-meas)# delay-measurement delay-profile name profile2
```

```
Router(config-sr-te-policy)# candidate-paths
Router(config-sr-te-policy-path)# preference 100
Router(config-sr-te-policy-path-pref)# explicit segment-list LIST1
Router(config-sr-te-pp-info)# weight 2

Router(config-sr-te-policy-path-pref)# explicit segment-list LIST2
Router(config-sr-te-pp-info)# weight 3
```

### Running Configuration

```
Router# show run segment-routing traffic-eng policy TEST

segment-routing
 traffic-eng
  policy TEST
   color 4 end-point ipv4 10.10.10.10
   candidate-paths
    preference 100
     explicit segment-list LIST1
      weight 2
     !
     explicit segment-list LIST2
      weight 3
     !
    !
   !
   performance-measurement
    delay-measurement
     delay-profile name profile2
```

### Verification

```
Router# show performance-measurement profile named-profile delay

----------------------------
0/RSP0/CPU0
----------------------------
SR Policy Delay Measurement Profile Name: profile2
  Profile configuration:
    Measurement mode                          : One-way
    Protocol type                             : TWAMP-light
    Encap mode                                : UDP
    Type of service:
      PM-MPLS traffic class                   : 6
      TWAMP-light DSCP                        : 63
    Probe computation interval                : 60 (effective: 60) seconds
    Burst interval                            : 60 (effective: 60) mSec
    Packets per computation interval          : 1000
    Periodic advertisement                    : Enabled
      Interval                                : 60 (effective: 60) sec
      Threshold                               : 20%
      Minimum-change                          : 1000 uSec
    Advertisement accelerated                 : Disabled
    Advertisement logging:
      Delay exceeded                          : Disabled (default)
    Threshold crossing check                  : Maximum-delay
    Router alert                              : Disabled (default)
    Destination sweeping mode                 : Disabled
    Liveness detection parameters:
      Multiplier                              : 3
      Logging state change                    : Disabled
```

### On-Demand SR Policy

```
Router(config-sr-te)# on-demand color 20
Router(config-sr-te-color)# performance-measurement delay-measurement
Router(config-sr-te-color-delay-meas)# delay-profile name profile2
Router(config-sr-te-color-delay-meas)# commit
```

### Running Configuration

```
Router# show run segment-routing traffic-eng on-demand color 20

segment-routing
 traffic-eng
  on-demand color 20
   performance-measurement
    delay-measurement
     delay-profile name profile2
```

## Liveness Profile

This example shows how to create a *named* SR performance measurement liveness profile.

```
Router(config)# performance-measurement liveness-profile name profile3
Router(config-pm-ld-profile)# probe
Router(config-pm-ld-probe)# tx-interval 60000
Router(config-pm-ld-profile)# probe
Router(config-pm-ld-probe)# tx-interval 60000
Router(config-pm-ld-probe)# tos dscp 10
Router(config-pm-ld-probe)# exit

Router(config-pm-ld-profile)# liveness-detection
Router(config-pm-ld-profile-ld)# multiplier 5
Router(config-pm-ld-profile-ld)# commit
```

### Apply the Liveness Profile for the SR Policy

This example shows how to enable PM for SR policy liveness for a specific policy.

For the same policy, you cannot enable delay-measurement (delay-profile) and liveness-detection (liveness-profile) at the same time. For example, if delay measurement is enabled, use the **no delay-measurement** command to disable it, and then enable the following command for enabling liveness detection.

```
Router(config)# segment-routing traffic-eng
Router(config-sr-te)# policy TRST2
Router(config-sr-te-policy)# color 40 end-point ipv4 20.20.20.20
Router(config-sr-te-policy)# candidate-paths
Router(config-sr-te-policy-path)# preference 50
Router(config-sr-te-policy-path-pref)# explicit segment-list LIST3
Router(config-sr-te-pp-info)# weight 2

Router(config-sr-te-policy-path-pref)# explicit segment-list LIST4
Router(config-sr-te-pp-info)# weight 3

Router(config-sr-te-policy)# performance-measurement
Router(config-sr-te-policy-perf-meas)# liveness-detection liveness-profile name profile3
```

### Running Configuration

```
Router# show run segment-routing traffic-eng policy TRST2

segment-routing
 traffic-eng
  policy TRST2
   color 40 end-point ipv4 20.20.20.20
   candidate-paths
```

```
    preference 50
     explicit segment-list LIST3
      weight 2
     !
     explicit segment-list LIST4
      weight 3
     !
    !
   !
   performance-measurement
    liveness-detection
     liveness-profile name profile3
    !
```

### Verification

```
Router# show performance-measurement profile named-profile delay

-----------
0/RSP0/CPU0
-----------

SR Policy Liveness Detection Profile Name: profile1
  Profile configuration:
    Measurement mode                          : Loopback
    Protocol type                             : TWAMP-light
    Type of service:
      TWAMP-light DSCP                        : 10
    Burst interval                            : 60 (effective: 60) mSec
    Destination sweeping mode                 : Disabled
    Liveness detection parameters:
      Multiplier                              : 3
      Logging state change                    : Disabled

SR Policy Liveness Detection Profile Name: profile3
  Profile configuration:
    Measurement mode                          : Loopback
    Protocol type                             : TWAMP-light
    Type of service:
      TWAMP-light DSCP                        : 10
    Burst interval                            : 60 (effective: 60) mSec
    Destination sweeping mode                 : Disabled
    Liveness detection parameters:
      Multiplier                              : 3
      Logging state change                    : Disabled
```

### On-Demand SR Policy

For the same policy, you cannot enable delay-measurement (delay-profile) and liveness-detection (liveness-profile) at the same time. For example, to disable delay measurement, use the **no delay-measurement** command, and then enable the following command for enabling liveness detection.

```
Router(config-sr-te)# on-demand color 30
Router(config-sr-te-color)# performance-measurement
Router(config-sr-te-color-pm)# liveness-detection liveness-profile name profile1
Router(config-sr-te-color-delay-meas)# commit
```

### Running Configuration

```
Router# show run segment-routing traffic-eng on-demand color 30

segment-routing
 traffic-eng
  on-demand color 30
   performance-measurement
```

```
    liveness-detection
     liveness-profile name profile1
    !
```

### Verification

```
Router# show performance-measurement profile named-profile liveness

--------------------
0/RSP0/CPU0
--------------------
SR Policy Liveness Detection Profile Name: profile1
  Profile configuration:
    Measurement mode                          : Loopback
    Protocol type                             : TWAMP-light
    Type of service:
      TWAMP-light DSCP                        : 10
    Burst interval                            : 60 (effective: 60) mSec
    Destination sweeping mode                 : Disabled
    Liveness detection parameters:
      Multiplier                              : 3
      Logging state change                    : Disabled
```

## Delay Normalization

*Table 71: Feature History Table*

| Feature Name | Release Information | Feature Description |
|---|---|---|
| SR-TE Delay Normalization for OSPF | Release 7.3.1 | This feature extends the current Delay Normalization feature to support OSPF. |

Performance measurement (PM) measures various link characteristics like packet loss and delay. Such characteristics can be used by IS-IS as a metric for Flexible Algorithm computation. Low latency routing using dynamic delay measurement is one of the primary use cases for Flexible Algorithm technology.

Delay is measured in microseconds. If delay values are taken as measured and used as link metrics during the IS-IS topology computation, some valid ECMP paths might be unused because of the negligible difference in the link delay.

The Delay Normalization feature computes a normalized delay value and uses the normalized value instead. This value is advertised and used as a metric during the Flexible Algorithm computation.

The normalization is performed when the delay is received from the delay measurement component. When the next value is received, it is normalized and compared to the previous saved normalized value. If the values are different, then the LSP generation is triggered.

The following formula is used to calculate the normalized value:

- **Dm** – measured Delay
- **Int** – configured normalized Interval
- **Off** – configured normalized Offset (must be less than the normalized interval Int)
- **Dn** – normalized Delay
- **a** = Dm / Int (rounded down)
- **b** = a * Int + Off

If the measured delay (Dm) is less than or equal to **b**, then the normalized delay (Dn) is equal to **b**. Otherwise, Dn is **b** + **Int**.

### Example

The following example shows a low-latency service. The intent is to avoid high-latency links (1-6, 5-2). Links 1-2 and 5-6 are both low-latency links. The measured latency is not equal, but the difference is insignificant.

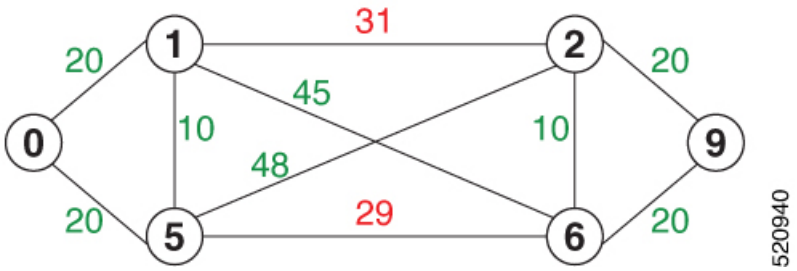


We can normalize the measured latency before it is advertised and used by IS-IS. Consider a scenario with the following:

- Interval = 10
- Offset = 3

The measured delays will be normalized as follows:

- **Dm** = 29

  **a** = 29 / 10 = 2 (2.9, rounded down to 2)

  **b** = 2 * 10 + 3 = 23

  In this case, **Dm** (29) is greater than **b** (23); so **Dn** is equal to **b**+**I** (23 + 10) = **33**

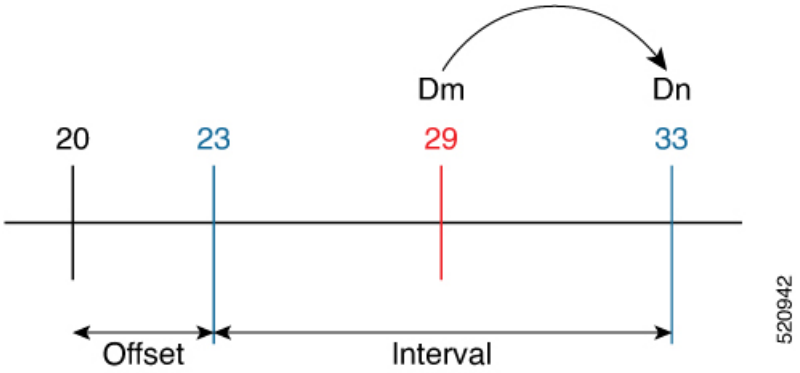


- **Dm** = 31

  **a** = 31 / 10 = 3 (3.1, rounded down to 3)

  **b** = 3 * 10 + 3 = 33

  In this case, **Dm** (31) is less than **b** (33); so **Dn** is **b** = **33**

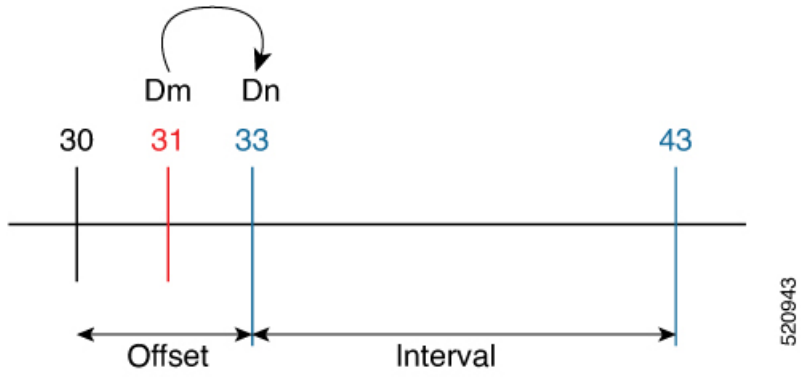


The link delay between 1-2 and 5-6 is normalized to 33.

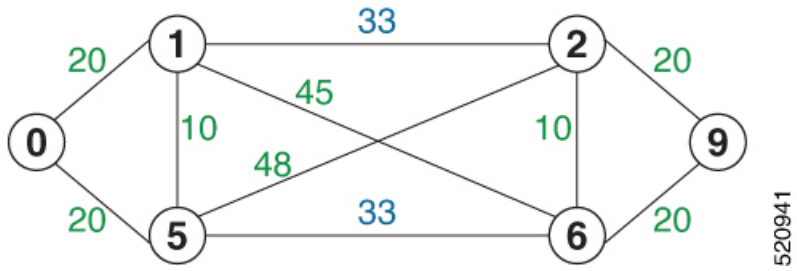


### Configuration

Delay normalization is disabled by default. To enable and configure delay normalization, use the **delay normalize interval** *interval* [**offset** *offset*] command.

- *interval* – The value of the normalize interval in microseconds.
- *offset* – The value of the normalized offset in microseconds. This value must be smaller than the value of normalized interval.

### IS-IS Configuration

```
router isis 1
 interface GigEth 0/0/0/0
  delay normalize interval 10 offset 3
  address-family ipv4 unicast
   metric 77
```

### OSPF Configuration

```
router ospf 1
 area 0
  interface GigabitEthernet0/0/0/0
   delay normalize interval 10 offset 3
  !
 !
!
```

# Link Anomaly Detection with IGP Penalty

*Table 72: Feature History Table*

| Feature Name | Release Information | Feature Description |
|---|---|---|
| Link Anomaly Detection with IGP Penalty | Release 7.4.1 | This feature allows you to define thresholds above the measured delay that is considered "anomalous" or unusual. When this threshold is exceeded, an anomaly (A) bit/flag is set along with link delay attribute that is sent to clients. |

Customers might experience performance degradation issues, such as increased latency or packet loss on a link. Degraded links might be difficult to troubleshoot and can affect applications, especially in cases where traffic is sent over multiple ECMP paths where one of those paths is degraded.

The Anomaly Detection feature allows you to define a delay anomaly threshold to identify unacceptable link delays. Nodes monitor link performance using link delay monitoring probes. The measured value is compared against the delay anomaly threshold values. When the upper bound threshold is exceeded, the link is declared "abnormal", and performance measurement sets an anomaly bit (A-bit). When IGP receives the A-bit, IGP can automatically increase the IGP metric of the link by a user-defined amount to make this link undesirable or unusable. When the link recovers (lower bound threshold), PM resets the A-bit.

For information on configuring IGP penality, see the following:

- IS-IS Penalty for Link Delay Anomaly
- OSPF Penalty for Link Delay Anomaly

### Usage Guidelines and Limitations

This feature is not active when narrow metrics are configured because the performance measurement advertisement requires the "wide" metric type length values.

### Configuration Example

The following example shows how to configure the upper and lower anomoly thresholds. The range for *upper_bound* and *lower_bound* is from 1 to 200,000 microseconds. The *lower_bound* value must be less than the *upper_bound* value.

```
RP/0/0/CPU0:router(config)# performance-measurement delay-profile interfaces default
RP/0/0/CPU0:router(config-pm-dm-intf)# advertisement
RP/0/0/CPU0:router(config-pm-dm-intf-adv)# anomaly-check upper-bound 5000 lower-bound 1000
RP/0/0/CPU0:router(config-pm-dm-intf-adv)# commit
```

### Running Configuration

```
performance-measurement
 delay-profile interfaces default
  advertisement
   anomaly-check
    upper-bound 5000 lower-bound 1000
   !
  !
```

```
 !
!
end
```

# Delay Measurement for IP Endpoint

*Table 73: Feature History Table*

| Feature Name | Release Information | Feature Description |
|---|---|---|
| IP Endpoint Delay Measurement Monitoring | Release 7.4.1<br>Release 7.3.2 | This feature measures the end-to-end delay and monitors liveness of a specified IP endpoint node, including VRF-aware (awareness of multiple customers belonging to different VRFs).<br>This feature is supported on IPv4, IPv6, and MPLS data planes. |

Delay for an IP endpoint is the amount of time it takes for a data packet to travel from a source device to a specific IP endpoint within a network.

To measure a delay for a packet, also called a probe, is sent from a source device to the target IP endpoint.

The time from when the packet leaves the source to when it arrives at the endpoint is measured and recorded as the delay.

You can measure one-way delay, Two-way delay, and Roundtrip delay or delay in loop-back mode. For more information on Delay measurement, see Link Delay Measurement and Measurement Modes.

### Collecting IP Endpoint Probe Statistics

- Statistics associated with the probe for delay metrics are available via Histogram and Streaming Telemetry.
- Model Driven Telemetry (MDT) is supported for the following data:
  - Summary, endpoint, session, and counter show command bags.
  - History buffers data
- Model Driven Telemetry (MDT) and Event Driven Telemetry (EDT) are supported for the following data:
  - Delay metrics computed in the last probe computation-interval (event: probe-completed)
  - Delay metrics computed in the last aggregation-interval; that is, end of the periodic advertisement-interval (event: advertisement-interval expired)
  - Delay metrics last notified (event: notification-triggered)
- The following xpaths for MDT/EDT is supported:
  - `Cisco-IOS-XR-perf-meas-oper:performance-measurement/nodes/node/endpoints/endpoint-delay/endpoint-last-probes`
  - `Cisco-IOS-XR-perf-meas-oper:performance-measurement/nodes/node/endpoints/endpoint-delay/endpoint-last-aggregations`

- `Cisco-IOS-XR-perf-meas-oper:performance-measurement/nodes/node/endpoints/endpoint-delay/endpoint-last-advertisements`

### Guidelines and Limitations

You can specify a custom labeled path through one or more user-configured segment-lists. User-configured segment-list represents the forwarding path from sender to reflector when the probe is configured in delay-measurement mode.

- Examples of the custom segment-list include:
  - Probe in delay-measurement mode with a segment-list that includes Flex-Algo prefix SID of the endpoint
  - Probe in delay-measurement mode with a segment-list that includes a SID-list with labels to reach the endpoint or the sender (forward direction)
  - Probe in delay-measurement mode with a segment-list that includes BSID associated with SR policy to reach the end point.
- Endpoint segment list configuration is not supported under nondefault VRF.
- SR Performance Measurement endpoint session over BVI interface is not supported.

## IP Endpoint Delay Measurement over MPLS Network Usecases

The following use-cases show different ways to deploy delay measurement and liveness detection for IP endpoints.

### Use-Case 1: Delay Measurement Probe Toward an IP Endpoint Reachable in the Global Routing Table

The following figure illustrates a delay measurement probe toward an IP endpoint reachable in the global routing table. The network interconnecting the sender and the reflector provides plain IP connectivity.

*Figure 36: Delay Measurement Probe Toward an IP Endpoint Reachable in the Global Routing Table*

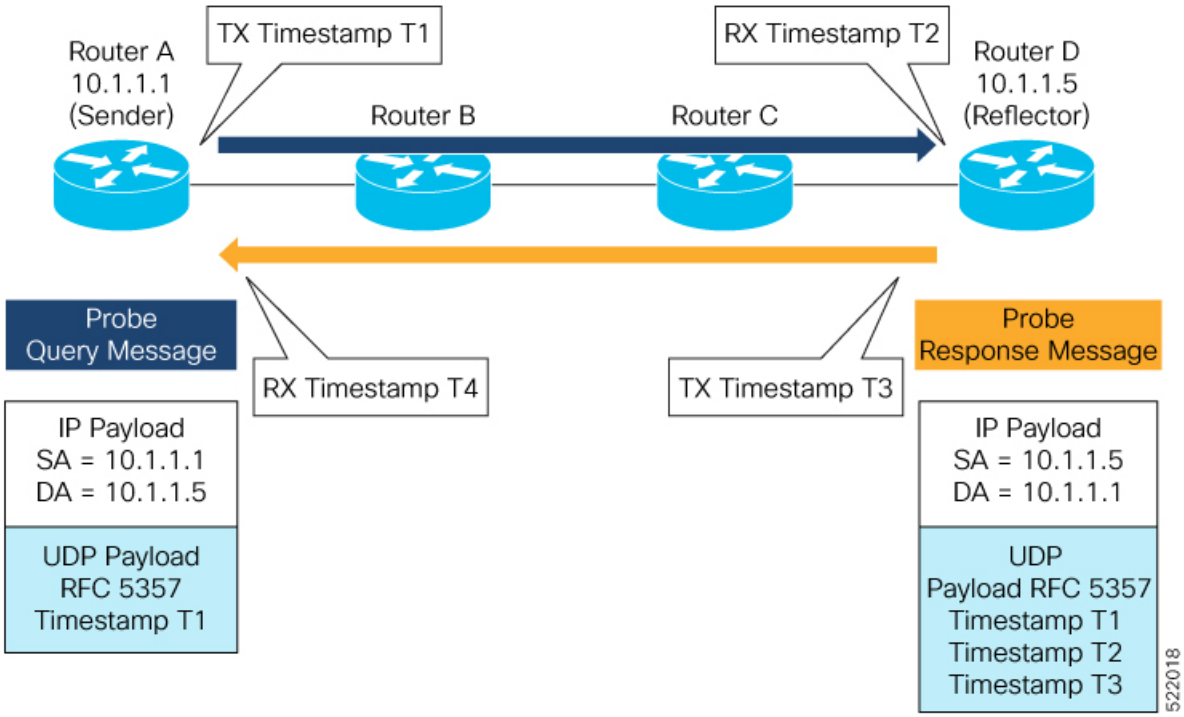


## Configuration

```
RouterA(config)# performance-measurement
RouterA(config-perf-meas)# endpoint ipv4 10.1.1.5
RouterA(config-pm-ep)# source-address ipv4 10.1.1.1
RouterA(config-pm-ep)# delay-measurement
RouterA(config-pm-ep-dm)# exit
RouterA(config-pm-ep)# exit
RouterA(config-perf-meas)# delay-profile endpoint default
RouterA(config-pm-dm-ep)# probe
RouterA(config-pm-dm-ep-probe)# measurement-mode one-way
```

## Running Configuration

```
performance-measurement
 endpoint ipv4 10.1.1.5
  source-address ipv4 10.1.1.1
  delay-measurement
  !
 !
 delay-profile endpoint default
  probe
   measurement-mode one-way
  !
 !
!
```

## Verification

```
RouterA# show performance-measurement endpoint ipv4 10.1.1.5
```

```
0/RSP0/CPU0
----------------------------------------------------------------------------------------------------------------

Endpoint name: IPv4-10.1.1.5-vrf-default
  Source address              : 10.1.1.1
  VRF name                    : default
  Delay-measurement           : Enabled
  Description                 : Not set
  Profile Keys:
    Profile name              : default
    Profile type              : Endpoint Delay Measurement


  Segment-list                : None
  Delay Measurement session:
    Session ID          : 33554433
    Last advertisement:
      No advertisements have occured

    Next advertisement:
      Threshold check scheduled in 4 more probes (roughly every 120 seconds)
      No probes completed

    Current computation:
      Started at: Jul 19 2021 16:28:06.723 (17.788 seconds ago)
      Packets Sent: 6, received: 0
      Measured delays (uSec): avg: 0, min: 0, max: 0, variance: 0
      Next probe scheduled at: Jul 19 2021 16:28:36.718 (in 12.207 seconds)
      Next burst packet will be sent in 0.207 seconds
      Burst packet sent every 3.0 seconds
```

### Use-Case 2: Delay Measurement Probe Toward an IP Endpoint Reachable in a User-Specified VRF

The following figure illustrates a delay measurement probe toward an IP endpoint reachable in a user-specified L3VPN's VRF routing table. The L3VPN ingress PE (Router A) acts as the sender. The reflector is located in a CE device behind the L3VPN egress PE (Router E). The network interconnecting the L3VPN PEs provides MPLS connectivity with Segment Routing.

*Figure 37: Delay Measurement Probe Toward an IP Endpoint Reachable in a User-Specified VRF*

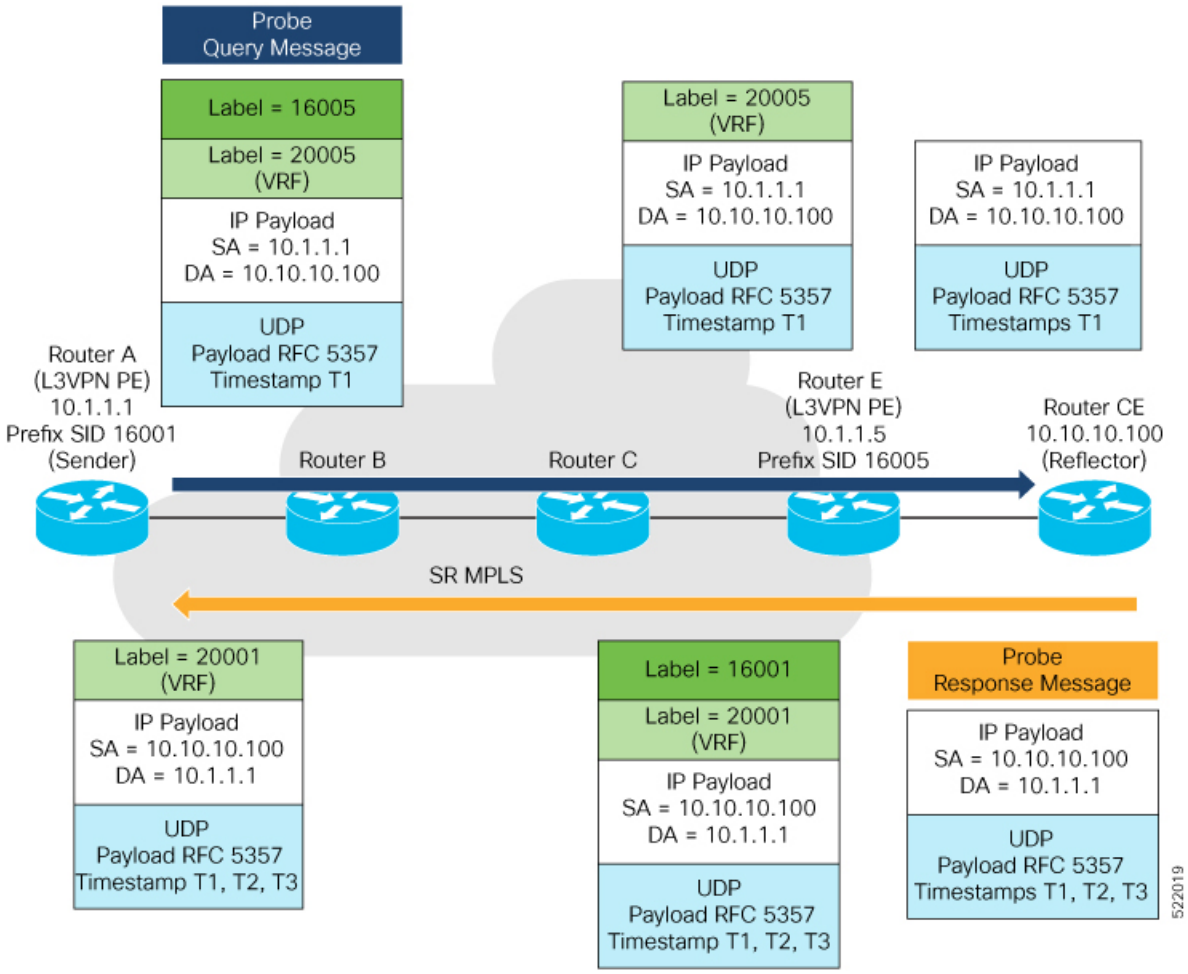


## Configuration

```
RouterA(config)# performance-measurement
RouterA(config-perf-meas)# endpoint ipv4 10.10.10.100 vrf green
RouterA(config-pm-ep)# source-address ipv4 10.1.1.1
RouterA(config-pm-ep)# delay-measurement
RouterA(config-pm-ep-dm)# exit
RouterA(config-pm-ep)# exit
RouterA(config-perf-meas)# delay-profile endpoint default
RouterA(config-pm-dm-ep)# probe
RouterA(config-pm-dm-ep-probe)# measurement-mode one-way
```

## Running Configuration

```
performance-measurement
 endpoint ipv4 10.10.10.100 vrf green
  source-address ipv4 10.1.1.1
  delay-measurement
  !
 !
 delay-profile endpoint default
  probe
   measurement-mode one-way
```

```
  !
 !
!
```

### Verification

```
RouterA# show performance-measurement endpoint vrf green

-----------------------------------------------------------------------------------------------------------
0/RSP0/CPU0
-----------------------------------------------------------------------------------------------------------

Endpoint name: IPv4-10.10.10.100-vrf-green
  Source address                : 10.1.1.1
  VRF name                      : green
  Delay-measurement             : Enabled
  Description                   : Not set
  Profile Keys:
    Profile name                : default
    Profile type                : Endpoint Delay Measurement


  Segment-list                  : None
  Delay Measurement session:
    Session ID          : 33554434
    Last advertisement:
      No advertisements have occured

    Next advertisement:
      Advertisement not scheduled as the probe is not running

    Current computation:
      Not running: Unable to resolve (non-existing) vrf
```

### Use Case 3: Delay Measurement Probe Toward an IP Endpoint Using Custom Labeled Paths

The following figure illustrates a delay measurement probe toward an IP endpoint learned by the IGP. The network interconnecting the sender and reflector provides MPLS connectivity with Segment Routing.

The IP endpoint is advertised with multiple SR algorithms (Algo 0 and Flex Algo 128). The probe is configured with two custom-labeled paths in order to monitor the LSP for each algorithm separately.

***Figure 38: Delay Measurement Probe Toward an IP Endpoint Using Custom Labeled Paths***

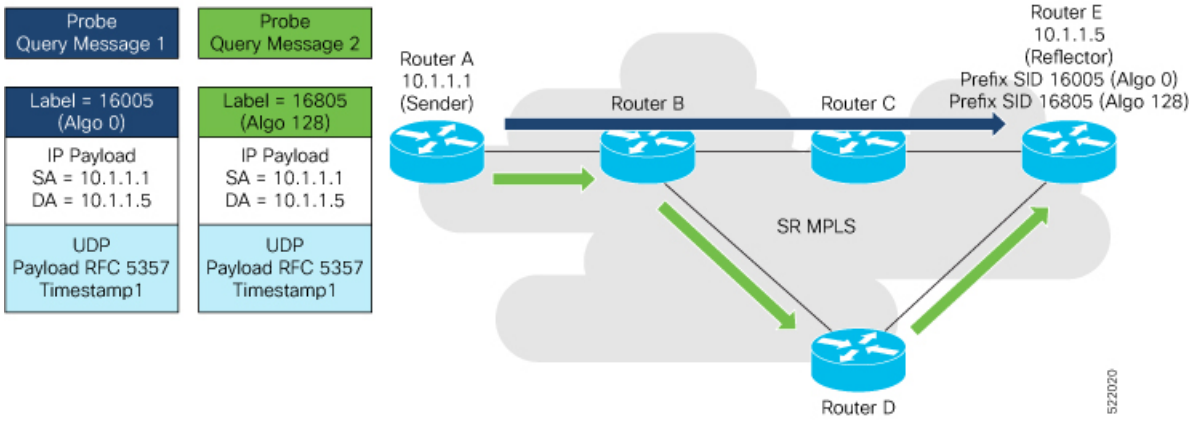

**Note** The probe response messages are not shown in the above figure.

### Configuration

```
RouterA(config)# segment-routing
RouterA(config-sr)# traffic-eng
RouterA(config-sr-te)# segment-list name SIDLIST1-Algo0
RouterA(config-sr-te-sl)# index 10 mpls label 16005
RouterA(config-sr-te-sl)# exit

RouterA(config-sr-te)# segment-list name SIDLIST2-FlexAlgo128
RouterA(config-sr-te-sl)# index 10 mpls label 16085
RouterA(config-sr-te-sl)# exit
RouterA(config-sr-te)# exit
RouterA(config-sr)# exit

RouterA(config)# performance-measurement
RouterA(config-perf-meas)# endpoint ipv4 10.1.1.5
RouterA(config-pm-ep)# source-address ipv4 10.1.1.1
RouterA(config-pm-ep)# segment-list name SIDLIST1-Algo0
RouterA(config-pm-ep-sl)# exit
RouterA(config-pm-ep)# segment-list name SIDLIST2-FlexAlgo128
RouterA(config-pm-ep-sl)# exit
RouterA(config-pm-ep)# delay-measurement
RouterA(config-pm-ep-dm)# exit
RouterA(config-pm-ep)# exit
RouterA(config-perf-meas)# delay-profile endpoint default
RouterA(config-pm-dm-ep)# probe
RouterA(config-pm-dm-ep-probe)# measurement-mode one-way
```

### Running Configuration

```
segment-routing
 traffic-eng
  segment-list SIDLIST1-Algo0
   index 10 mpls label 16005
   !
  segment-list SIDLIST2-FlexAlgo128
   index 10 mpls label 16085
   !
  !
 !
!
performance-measurement
 endpoint ipv4 10.1.1.5
  segment-list name SIDLIST1-Algo0
  !
  segment-list name SIDLIST2-FlexAlgo128
  !
  source-address ipv4 10.1.1.1
  delay-measurement
  !
 !
 delay-profile endpoint default
  probe
   measurement-mode one-way
  !
 !
!
```

### Verification

```
RouterA# show performance-measurement endpoint ipv4 10.1.1.5

-----------------------------------------------------------------------------------------------------------------
0/RSP0/CPU0
-----------------------------------------------------------------------------------------------------------------

Endpoint name: IPv4-10.1.1.5-vrf-default
  Source address              : 10.1.1.1
  VRF name                    : default
  Delay-measurement           : Enabled
  Description                 : Not set
  Profile Keys:
    Profile name              : default
    Profile type              : Endpoint Delay Measurement


  Segment-list                : None
  Delay Measurement session:
    Session ID          : 33554433
    Last advertisement:
      No advertisements have occured

    Next advertisement:
      Threshold check scheduled in 4 more probes (roughly every 120 seconds)
      No probes completed

    Current computation:
      Started at: Jul 19 2021 16:31:53.827 (15.844 seconds ago)
      Packets Sent: 6, received: 0
      Measured delays (uSec): avg: 0, min: 0, max: 0, variance: 0
      Next probe scheduled at: Jul 19 2021 16:32:22.957 (in 13.286 seconds)
      Next burst packet will be sent in 1.286 seconds
      Burst packet sent every 3.0 seconds

  Segment-list                : SIDLIST1-Algo0
  Delay Measurement session:
    Session ID          : 33554435
    Last advertisement:
      No advertisements have occured

    Next advertisement:
      Threshold check scheduled in 4 more probes (roughly every 120 seconds)
      No probes completed

    Current computation:
     Started at: Jul 19 2021 16:31:53.827 (15.844 seconds ago)
      Packets Sent: 4, received: 0
      Measured delays (uSec): avg: 0, min: 0, max: 0, variance: 0
      Next probe scheduled at: Jul 19 2021 16:32:22.957 (in 13.286 seconds)
      Next burst packet will be sent in 2.940 seconds
      Burst packet sent every 3.0 seconds


  Segment-list                : SIDLIST2-FlexAlgo128
  Delay Measurement session:
    Session ID          : 33554436
    Last advertisement:
      No advertisements have occured

    Next advertisement:
      Threshold check scheduled in 4 more probes (roughly every 120 seconds)
      No probes completed

    Current computation:
```

```
Started at: Jul 19 2021 16:31:53.827 (15.844 seconds ago)
Packets Sent: 4, received: 0
Measured delays (uSec): avg: 0, min: 0, max: 0, variance: 0
Next probe scheduled at: Jul 19 2021 16:32:22.957 (in 13.286 seconds)
Next burst packet will be sent in 2.940 seconds
Burst packet sent every 3.0 seconds
```

### Use-Case 4: Liveness Detection Probe Toward an IP Endpoint

IP endpoint liveness detection leverages the loopback measurement-mode. The following workflow describes the sequence of events.

1. The sender creates and transmits the PM probe packets.

   The IP destination address (DA) on the probe packets is set to the loopback value of the sender itself.

   The transmit timestamp (T1) is added to the payload.

   The probe packet is encapsulated with the label corresponding to the endpoint.

2. The network delivers the PM probe packets following the LSP toward the endpoint.

3. The end-point receives the PM probe packets.

   Packets are forwarded back to the sender based on the forwarding entry associated with the IP DA of the PM probe packet. If an LSP exists, the probe packet is encapsulated with the label of the sender.

4. The sender node receives the PM probe packets.

   The received timestamp (T4) stored.

   If the sender node doesn't receive the specified number of probe packets (based on the configured multiplier), the sender node declares the PM session as down.

The following figure illustrates a liveness detection probe toward an IP endpoint learned by the IGP. The network interconnecting the sender and reflector provides MPLS connectivity with Segment Routing.

The liveness detection multiplier is set to 5 to specify the number of consecutive missed probe packets before the PM session is declared as down.

***Figure 39: IP Endpoint Liveness Detection***

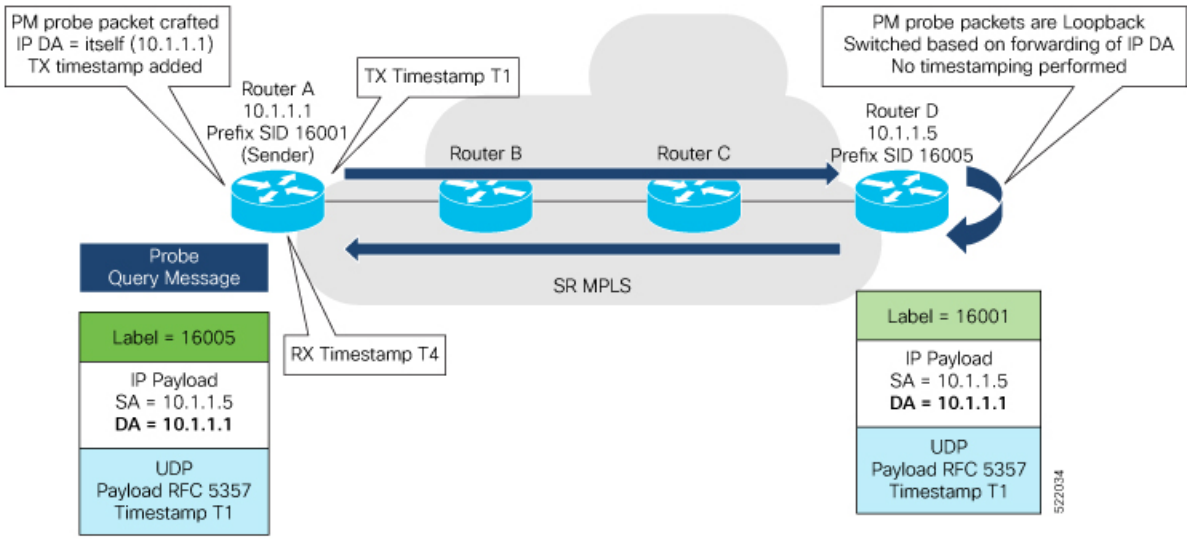

### Configuration

```
RouterA(config)# performance-measurement
RouterA(config-perf-meas)# endpoint ipv4 10.1.1.5
RouterA(config-pm-ep)# source-address ipv4 10.1.1.1
RouterA(config-pm-ep)# liveness-detection
RouterA(config-pm-ep-ld)# exit
RouterA(config-pm-ep)# exit
RouterA(config-perf-meas)# liveness-profile endpoint default
RouterA(config-pm-ld-ep)# liveness-detection
RouterA(config-pm-ld-ep-ld)# multiplier 5
RouterA(config-pm-ld-ep-ld)# exit
```

### Running Configuration

```
performance-measurement
 endpoint ipv4 10.1.1.5
  source-address ipv4 10.1.1.1
  liveness-detection
  !
 !
 liveness-profile endpoint default
  liveness-detection
   multiplier 5
  !

 !
!
end
```

### Verification

```
RouterA# show performance-measurement endpoint ipv4 10.1.1.5

-------------------------------------------------------------------------------
0/RSP0/CPU0
-------------------------------------------------------------------------------

Endpoint name: IPv4-10.1.1.5-vrf-default
  Source address              : 10.1.1.1
  VRF name                    : default
  Liveness Detection          : Enabled
  Profile Keys:
    Profile name              : default
    Profile type              : Endpoint Liveness Detection

  Segment-list                : None
  Session State: Down
  Missed count: 0
```

# SR Policy End-to-End Delay Measurement

The extended TE link delay metric (minimum-delay value) can be used to compute paths for SR policies as an optimization metric or as an accumulated delay bound.

There is a need to monitor the end-to-end delay experienced by the traffic sent over an SR policy to ensure that the delay does not exceed the requested “upper-bound” and violate SLAs. You can verify the end-to-end delay values before activating the candidate-path or the segment lists of the SR policy in forwarding table, or to deactivate the active candidate-path or the segment lists of the SR policy in forwarding table.

**Note** The end-to-end delay value of an SR policy will be different than the path computation result (for example, the sum of TE link delay metrics) due to several factors, such as queuing delay within the routers.

### Usage Guidelines and Limitations for PM for SR Policy Delay

The following usage guidelines and limitations apply:

- SR-PM delay measurement over SR Policy is supported on manually configured SR Policies and On-Demand SR Policies (ODN).
- SR-PM delay measurement over SR Policy is not supported on PCE-initiated SR Policies.
- Hardware clocks must be synchronized between the querier and the responder nodes of the link using PTP for one-way delay measurement.

### Configuring Performance Measurement Parameters

This example shows how to configure performance-measurement parameters for SR policy delay as a global default profile. The default values for the different parameters in the PM for SR policy delay is given as follows:

- **probe**: The default mode for probe is one-way delay measurement. Two-way delay and loopback modes are supported. See Measurement Modes, on page 512 for more information.
- **tx-interval**: Interval for sending probe packet. The default value is 3000000 microseconds and the range is from 30000 to 15000000 microseconds.
- **computation interval**: Interval for metric computation. Default is 30 seconds; range is 1 to 3600 seconds.
- **protocol**:
  - **twamp-light**: SR Policy delay measurement using RFC 5357 with IP/UDP encap. This is the default protocol.
  - **pm-mpls**: SR Policy delay measurement using RFC6374 with MPLS encap.
- **tos**: Type of Service
  - **dscp** *value*: The default value is 48 and the range is from 0 to 63.
  - **traffic-class** *value*: The default value is 6 and the range is from 0 to 7.
- **advertisement threshold-check**: minimum-delay/maximum-delay - The default value of periodic advertisement threshold-check is maximum-delay.
- **periodic advertisement**: Periodic advertisement is enabled by default.
- **periodic-advertisement interval**: The default value is 120 seconds and the interval range is from 30 to 3600 seconds.
- **periodic-advertisement threshold**: Checks the minimum-delay metric change for threshold crossing for periodic advertisement. The default value is 10 percent and the range is from 0 to 100 percent.

- **periodic-advertisement minimum-change**: The default value is 500 microseconds (usec) and the range is from 0 to 100000 microseconds.
- **accelerated advertisement**: Accelerated advertisement is disabled by default.
- **accelerated-advertisement threshold**: Checks the minimum-delay metric change for threshold crossing for accelerated advertisement. The default value is 20 percent and the range is from 0 to 100 percent.
- **accelerated-advertisement minimum**: The default value is 500 microseconds and the range is from 1 to 100000 microseconds.

```
Router(config)# performance-measurement delay-profile sr-policy default
Router(config-pm-dm-srpolicy)# probe
Router(config-pm-dm-srpolicy-probe)# tx-interval 60000
Router(config-pm-dm-srpolicy-probe)# computation-interval 60
Router(config-pm-dm-srpolicy-probe)# protocol twamp-light
Router(config-pm-dm-srpolicy-probe)# tos dscp 63
Router(config-pm-dm-srpolicy-probe)# exit

Router(config-pm-dm-srpolicy)# advertisement
Router(config-pm-dm-srpolicy-adv)# periodic
Router(config-pm-dm-srpolicy-adv-per)# interval 60
Router(config-pm-dm-srpolicy-adv-per)# minimum-change 1000
Router(config-pm-dm-srpolicy-adv-per)# threshold 20
Router(config-pm-dm-srpolicy-adv-per)# exit

Router(config-pm-dm-srpolicy-adv)# accelerated
Router(config-pm-dm-srpolicy-adv-acc)# minimum-change 1000
Router(config-pm-dm-srpolicy-adv-acc)# threshold 10
Router(config-pm-dm-srpolicy-adv-acc)# exit

Router(config-pm-dm-srpolicy-adv)# threshold-check minimum-delay
Router(config-pm-dm-srpolicy-adv)# exit
Router(config-pm-dm-srpolicy)#
```

### Configure the UDP Destination Port

Configuring the UDP port for TWAMP-Light protocol is optional. By default, PM uses port 862 as the TWAMP-reserved UDP destination port for delay.

The UDP port is configured for each PM measurement probe type (delay, loss, protocol, authentication mode, etc.) on querier and responder nodes. If you configure a different UDP port, the UDP port for each PM measurement probe type must match on the querier and the responder nodes.

**Note** The same UDP destination port is used for delay measurement for links and SR Policy.

This example shows how to configure the UDP destination port for delay.

```
Router(config)# performance-measurement

Router(config-perf-meas)# protocol twamp-light

Router(config-pm-protocol)# measurement delay unauthenticated
Router(config-pm-proto-mode)# querier-dst-port 12000
```

### Enable Performance Measurement for SR Policy

This example shows how to enable PM for SR policy delay for a specific policy.

```
Router(config)# segment-routing traffic-eng
Router(config-sr-te)# policy foo
Router(config-sr-te-policy)# performance-measurement
Router(config-sr-te-policy-perf-meas)# delay-measurement
```

### SR Policy Probe IP/UDP ECMP Hashing Configuration

This example shows how to configure SR Policy ECMP IP-hashing mode.

- The destination IPv4 address 127.x.x.x – 127.y.y.y is used in the Probe messages to take advantages of 3-tuple IP hashing (source-address, destination-address, and local router ID) for ECMP paths of SR-MPLS Policy.

**Note** The destination IPv4 address must be 127/8 range (loopback), otherwise it will be rejected.

- One PM session is always created for the actual endpoint address of the SR Policy.
- You can specify the number of IP addresses to sweep. The range is from 0 (default, no sweeping) to 128.
- Platforms may have a limitation for large label stack size to not check IP address for hashing.

```
Router(config)# performance-measurement delay-profile sr-policy default
Router(config-pm-dm-srpolicy)# probe
Router(config-pm-dm-srpolicy-probe)# sweep
Router(config-pm-dm-srpolicy-probe-sweep)# destination ipv4 127.0.0.1 range 28
```

### Verification

```
Router# show performance-measurement sr-policy
Mon Jan 20 18:48:41.002 PST

-------------------------------------------------------------------------------
0/0/CPU0
-------------------------------------------------------------------------------

Policy Name                LSP ID Tx/Rx         Avg/Min/Max/Variance
 ---------------------------------------------------------------------------
srte_c_10_ep_192.168.0.4   2      6/6           27012/26906/27203/106

Router# show performance-measurement sr-policy name srte_c_10_ep_192.168.0.4 detail verbose
Mon Jan 20 18:44:22.400 PST

-------------------------------------------------------------------------------
0/0/CPU0
-------------------------------------------------------------------------------
SR Policy name: srte_c_10_ep_192.168.0.4
  Color                       : 10
  Endpoint                    : 192.168.0.4
  Number of candidate-paths   : 1

  Candidate-Path:
```

```
    Instance                  : 2
    Preference                : 100
    Protocol-origin           : Configured
    Discriminator             : 100
    Source address            : 192.168.0.2
    Reverse path label        : Not configured
    Number of segment-lists   : 1
    Last advertisement:
      No advertisements have occured
    Next advertisement:
      Check scheduled at the end of the current probe (roughly every 30 seconds)
      Aggregated delays (uSec): avg: 45218, min: 26512, max: 82600, variance: 18706
      Rolling average (uSec): 45218
    Last probe:
      Packets Sent: 9, received: 9
      Measured delays (uSec): avg: 45218, min: 26512, max: 82600, variance: 18706
    Current Probe:
      Started at Jan 20 2020 18:44:19.170 (3.453 seconds ago)
      Packets Sent: 3, received: 3      Measured delays (uSec): avg: 26588, min: 26558,
max: 26630, variance: 30
    Next probe scheduled at Jan 20 2020 18:44:34.166 (in 11.543 seconds)
    Next burst packet will be sent in 1.543 seconds
    Burst packet sent every 5.0 seconds
    Liveness Detection: Disabled

    Segment-List              : R4
        16004
      Number of atomic paths  : 3
      Last advertisement:
        No advertisements have occured
      Next advertisement:
        Aggregated delays (uSec): avg: 45218, min: 26512, max: 82600, variance: 18706
        Rolling average (uSec): 45218
      Last probe:
        Packets Sent: 9, received: 9
        Measured delays (uSec): avg: 45218, min: 26512, max: 82600, variance: 18706
      Current probe:
        Packets Sent: 3, received: 3
        Measured delays (uSec): avg: 26588, min: 26558, max: 26630, variance: 30
      Liveness Detection: Disabled

      Atomic path:
        Hops                  : 127.0.0.0
        Session ID            : 33554434
        Last advertisement:
          No advertisements have occured
        Next advertisement:
          Aggregated delays (uSec): avg: 45407, min: 26629, max: 82600, variance: 18778
          Rolling average (uSec): 45407
        Last Probe:
          Packets Sent: 3, received: 3
          Measured delays (uSec): avg: 45407, min: 26629, max: 82600, variance: 18778
        Current Probe:
          Packets Sent: 1, received: 1
          Measured delays (uSec): avg: 26630, min: 26630, max: 26630, variance: 0
        Probe samples:
          Packet Rx Timestamp       Measured Delay (nsec)
          Jan 20 2020 18:44:19.198        26630730
        Liveness Detection: Disabled

      Atomic path:
        Hops                  : 127.0.0.1
        Session ID            : 33554435
        Last advertisement:
```

```
          No advertisements have occured
        Next advertisement:
          Aggregated delays (uSec): avg: 45128, min: 26521, max: 81961, variance: 18607
          Rolling average (uSec): 45128
        Last Probe:
          Packets Sent: 3, received: 3
          Measured delays (uSec): avg: 45128, min: 26521, max: 81961, variance: 18607
        Current Probe:
          Packets Sent: 1, received: 1
          Measured delays (uSec): avg: 26576, min: 26576, max: 26576, variance: 0
        Probe samples:
          Packet Rx Timestamp       Measured Delay (nsec)
          Jan 20 2020 18:44:19.198        26576938
        Liveness Detection: Disabled

      Atomic path:
        Hops                  : 192.168.0.4
        Session ID            : 33554433
        Last advertisement:
          No advertisements have occured
        Next advertisement:
          Aggregated delays (uSec): avg: 45119, min: 26512, max: 81956, variance: 18607
          Rolling average (uSec): 45119
        Last Probe:
          Packets Sent: 3, received: 3
          Measured delays (uSec): avg: 45119, min: 26512, max: 81956, variance: 18607
        Current Probe:
          Packets Sent: 1, received: 1
          Measured delays (uSec): avg: 26558, min: 26558, max: 26558, variance: 0
        Probe samples:
          Packet Rx Timestamp       Measured Delay (nsec)
          Jan 20 2020 18:44:19.198        26558375
        Liveness Detection: Disabled


Router# show performance-measurement history probe sr-policy
Mon Jan 20 18:46:55.445 PST

-------------------------------------------------------------------------------
0/0/CPU0
-------------------------------------------------------------------------------

SR Policy name: srte_c_10_ep_192.168.0.4
  Color                       : 10
  Endpoint                    : 192.168.0.4

  Candidate-Path:
    Preference                : 100
    Protocol-origin           : Configured
    Discriminator             : 100
    Delay-Measurement history (uSec):
      Probe Start Timestamp     Pkt(TX/RX)   Average       Min       Max
      Jan 20 2020 18:46:34.174         9/9     26880     26684     27070
      Jan 20 2020 18:46:19.174         9/9     26899     26822     27004
      Jan 20 2020 18:46:04.173         9/9     26813     26571     27164
      Jan 20 2020 18:45:49.172         9/9     26985     26713     27293
      Jan 20 2020 18:45:34.172         9/9     26744     26557     27005
      Jan 20 2020 18:45:19.171         9/9     26740     26435     27093
     Jan 20 2020 18:45:04.171         9/9     27115     26938     27591
      Jan 20 2020 18:44:49.171         9/9     26878     26539     27143
      Jan 20 2020 18:44:34.171         9/9     26824     26562     27265
      Jan 20 2020 18:44:19.170         9/9     26944     26558     27422
      Jan 20 2020 18:44:06.543         9/9     45218     26512     82600

    Segment-List              : R4
```

```
16004
Delay-Measurement history (uSec):
  Probe Start Timestamp     Pkt(TX/RX)   Average       Min       Max
  Jan 20 2020 18:46:34.174         9/9     26880     26684     27070
  Jan 20 2020 18:46:19.174         9/9     26899     26822     27004
  Jan 20 2020 18:46:04.173         9/9     26813     26571     27164
  Jan 20 2020 18:45:49.172         9/9     26985     26713     27293
  Jan 20 2020 18:45:34.172         9/9     26744     26557     27005
  Jan 20 2020 18:45:19.171         9/9     26740     26435     27093
  Jan 20 2020 18:45:04.171         9/9     27115     26938     27591
  Jan 20 2020 18:44:49.171         9/9     26878     26539     27143
  Jan 20 2020 18:44:34.171         9/9     26824     26562     27265
  Jan 20 2020 18:44:19.170         9/9     26944     26558     27422
  Jan 20 2020 18:44:06.543         9/9     45218     26512     82600

Atomic path:
  Hops                  : 127.0.0.0
  Delay-Measurement history (uSec):
    Probe Start Timestamp     Pkt(TX/RX)   Average       Min       Max
    Jan 20 2020 18:46:34.174         3/3     26927     26747     27070
    Jan 20 2020 18:46:19.174         3/3     26982     26970     27004
    Jan 20 2020 18:46:04.173         3/3     26895     26647     27164
    Jan 20 2020 18:45:49.172         3/3     27054     26764     27293
    Jan 20 2020 18:45:34.172         3/3     26801     26694     27005
    Jan 20 2020 18:45:19.171         3/3     26807     26524     27093
    Jan 20 2020 18:45:04.171         3/3     27226     26938     27591
    Jan 20 2020 18:44:49.171         3/3     26976     26644     27143
    Jan 20 2020 18:44:34.171         3/3     26880     26679     27265
    Jan 20 2020 18:44:19.170         3/3     26994     26630     27422
    Jan 20 2020 18:44:06.543         3/3     45407     26629     82600

Atomic path:
  Hops                  : 127.0.0.1
  Delay-Measurement history (uSec):
    Probe Start Timestamp     Pkt(TX/RX)   Average       Min       Max
    Jan 20 2020 18:46:34.174         3/3     26865     26705     26988
    Jan 20 2020 18:46:19.174         3/3     26846     26822     26881
    Jan 20 2020 18:46:04.173         3/3     26787     26581     26939
    Jan 20 2020 18:45:49.172         3/3     26954     26728     27180
    Jan 20 2020 18:45:34.172         3/3     26724     26577     26957
    Jan 20 2020 18:45:19.171         3/3     26705     26452     27032
    Jan 20 2020 18:45:04.171         3/3     27043     26972     27124
    Jan 20 2020 18:44:49.171         3/3     26848     26550     27062
    Jan 20 2020 18:44:34.171         3/3     26800     26562     27204
    Jan 20 2020 18:44:19.170         3/3     26927     26576     27327
    Jan 20 2020 18:44:06.543         3/3     45128     26521     81961

Atomic path:
  Hops                  : 192.168.0.4
  Delay-Measurement history (uSec):
    Probe Start Timestamp     Pkt(TX/RX)   Average       Min       Max
    Jan 20 2020 18:46:34.174         3/3     26848     26684     26967
    Jan 20 2020 18:46:19.174         3/3     26871     26833     26913
    Jan 20 2020 18:46:04.173         3/3     26759     26571     26876
    Jan 20 2020 18:45:49.172         3/3     26947     26713     27163
    Jan 20 2020 18:45:34.172         3/3     26708     26557     26939
    Jan 20 2020 18:45:19.171         3/3     26708     26435     27075
    Jan 20 2020 18:45:04.171         3/3     27078     27016     27138
    Jan 20 2020 18:44:49.171         3/3     26812     26539     27043
    Jan 20 2020 18:44:34.171         3/3     26793     26582     27181
    Jan 20 2020 18:44:19.170         3/3     26911     26558     27308
    Jan 20 2020 18:44:06.543         3/3     45119     26512     81956
```

```
Router# show performance-measurement counters sr-policy name srte_c_10_ep_192.168.0.4
Mon Jan 20 18:47:55.499 PST

------------------------------------------------------------------------------
0/0/CPU0
------------------------------------------------------------------------------
SR Policy name: srte_c_10_ep_192.168.0.4
  Candidate-Path:
    Instance                  : 2
    Preference                : 100
    Protocol-origin           : Configured
    Discriminator             : 100
    Packets:
      Total sent                                : 141
      Total received                            : 141
    Errors:
      Total sent errors                         : 0
      Total received errors                     : 0
    Probes:
      Total started                             : 16
      Total completed                           : 15
      Total incomplete                          : 0
      Total advertisements                      : 2
    Segment-List              : R4
      16004
      Packets:
        Total sent                              : 141
        Total received                          : 141
      Errors:
        Total sent errors                       : 0
        Total received errors                   : 0
      Probes:
        Total started                           : 16
        Total completed                         : 15
        Total incomplete                        : 0
        Total advertisements                    : 2
```

# Path Tracing in SRv6 Network

*Table 74: Feature History Table*

| Feature Name | Release | Description |
|---|---|---|
| Path Tracing Midpoint Node | Release 7.8.1 | Path Tracing (PT) provides a log or record of the packet path as a sequence of interface IDs along with its time stamp. In Path Tracing, a node can behave as a source, midpoint, or sink node.<br><br>The Path Tracing Midpoint feature is implemented in this release which measures the hop-by-hop delay, traces the path in the network and collects egress interface load information and interface Id, and stores them in the Midpoint Compressed Data (MCD) section of Hop-by-Hop Path Tracing (HbH-PT) header.<br><br>This feature provides visibility to the Path Tracing Midpoint node that handles IPv6 transit in Path Tracing and full characterization of the packet delivery path. It provides real time information and the current status of the network.<br><br>This feature introduces the following command:<br><br>• **performance-measurement interface** |

Operators do not know the actual path that the packets take within their network. This makes operations, such as troubleshooting routing problems, or verifying Equal-Cost Multipath (ECMP), a complex problem. Also, operators want to characterize the network in terms of delay and load on a per-hop basis.

Knowledge of the Path Tracing Midpoint helps the operators to troubleshoot the routing problems faster.

This feature allows the operators to:

- Detect the actual path the packet takes between any two nodes in network (A and Z).
- Measure the end-to-end delay from A to Z.
- Measure the per-hop delay at each node on the path from A to Z.
- Detects the load on each router that forwards the packet from A to Z

Path Tracing (PT) provides a log or record of the packet path as a sequence of interface IDs along with its time-stamp. In addition, it provides a record of end-to-end delay, per-hop delay, and load on each egress interface along the packet delivery path.

In Path Tracing, a node can behave as a source, midpoint, or a sink node.

The source node generates and injects probe packets toward a destination node to trace the time-stamp and interface ID along the path of the probe packet. The Interface ID value of 0 means that Path Tracing (PT) is disabled on the interface.

Path Tracing (PT) Midpoint: It is a transit node that performs IPv6 routing. In addition, it records the PT information (MCD) in the HbH-PT.

**Note** There is no support for Path Tracing Midpoint on transit nodes that perform SRH operations or SRv6 endpoint operations.

- Midpoint Compressed Data (MCD): The PT Midpoint along the packet delivery path from the Source to Sink node, stores its PT information into the HbH-PT header. This PT information is called Midpoint Compressed Data (MCD).
- Hop-by-Hop Path Tracing (HbH-PT): In IPv6 The HbH PT Options header is used to carry optional information that is examined and processed by every node along a packet's delivery path. It contains a stack of MCDs.
- PT-Aware Midpoint: A midpoint node that performs plain IPv6 routing or SR Endpoint processing and in addition stores the Path Tracing information in HbH-PT.
- PT-Unaware Midpoint: A midpoint node that performs plain IPv6 routing or SR Endpoint processing and is not capable of performing Path Tracing.
- PT-Legacy Midpoint: A midpoint node that performs plain IPv6 routing or SR Endpoint processing and is not capable of recording Path Tracing information in the HBH-PT. However, it is capable of exporting Path Tracing information directly to the collector, using the node telemetry system.
- PT Source: A Source node is the one that starts a PT session and generates PT probes.
- PT Sink: A node that receives the PT probes sent from the Source node containing the information recorded by every PT Midpoint along the path and forwards them to the collector after recording its Path Tracing information.
- RC: Regional collector that receives PT probes, parses, and stores them in Timeseries DB

The destination or sink node that receives the PT probes generated by the PT source node, stores PT related info into PT-TLV and forwards them to a Regional Collector (RC). This Regional Collector (RC) parses and stores them in the TimeSeries Database. It uses the information in the Hop-by-Hop Path Tracing (HbH-PT) to construct the packet delivery path and the timestamps at each node.

# Limitations and Guidelines

This section lists the limitations of the path tracing feature.

- PT Source and Sink nodes are not supported.
- The system can still work as PT midpoint for other devices acting as Source or Sink in the PT network path.
- No support for interface load calculation and recording on IPv6 Path Tracing Midpoint Node.

# Configure Midpoint, Sink, and Source Nodes

**Note** These configurations must be done on the Source, Midpoint and Sink routers as shown in the following configuration examples.

- Configuration example of Midpoint node:

  Configure the Interface ID under Path-tracing for the Midpoint node and for it to participate in the MCD updates inside the probe packets:

```
Router(config)# performance-measurement
Router(config-pm)# interface FourHundredGigE0/0/0/1
Router(config-pm-interf)# path-tracing
Router(config-pm-interf-interf-id)# interface-id 200
Router(config-pm-interf-time)# exit
```

### Running Configuration

- Running configuration example of Midpoint node:

  Configure the Interface ID under Path-tracing for the Midpoint node and for it to participate in the MCD updates inside the probe packets:

```
performance-measurement
 interface FourHundredGigE0/0/0/1
  path-tracing
   interface-id 200
   exit
   !
  !
 !
!
```

### Verification

It is good to check the target interface configuration and performance-measurement configuration for that interface.

Verify using the show commands listed below to check if the PT configuration is applied to the interface properly.

```
Router# show cef interface fourHundredGigE 0/0/0/1
FourHundredGigE0/0/0/1 is up if_handle 0x0f000208 if_type IFT_FOURHUNDREDGE(0xcd)
  idb info 0x94dfbf88 flags 0x30001 ext 0x0
  Vrf Local Info (0x0)
  Interface last modified, create
  Reference count 1       Next-Hop Count 0
  PT (path tracing) is enabled: id:0xC8 load_in:0x0 load_out:0x0 tts:0x3
  Protocol Reference count 0
  Protocol ipv4 not configured or enabled on this card
  Primary IPV4 local address NOT PRESENT
```

This is an example of Show CLI with Interface ID:

```
Router# show run performance-measurement
performance-measurement
probe-profile name foo
  tx-interval 6000
  flow-label from 100 to 300 increment 10
!
!
Router# sh performance-measurement profile named-profile
```

```
Endpoint Probe Measurement Profile Name: foo
  Profile configuration:
    Measurement mode                            : One-way
    Protocol type                               : TWAMP-light
    Type of service:
      TWAMP-light DSCP                          : 48
    TX interval                                 : 6000000 (effective: 6000000) uSec
    Destination sweeping mode                   : Disabled
    Liveness detection parameters:
      Multiplier                                : 3
      Logging state change                      : Disabled

    Hop Limit                                   : 255
    Flow Label Count                            : 21
      Flow Labels: 100, 110, 120, 130, 140, 150, 160, 170, 180, 190, 200, 210, 220, 230,
240,
                   250, 260, 270, 280, 290, 300
    Packet Size Count                           : 0
    Traffic Class Count                         : 0
```

```
Router# show cef interface GigabitEthernet 0/2/0/0
GigabitEthernet0/2/0/0 is up if_handle 0x01000020 if_type IFT_GETHERNET(0xf)
  idb info 0x619f16f0 flags 0x30101 ext 0x627ef180 flags 0x30050
  Vrf Local Info (0x626510f0)
  Interface last modified Mar  4, 2022 13:34:43, modify
  Reference count 1       Next-Hop Count 3
  PT (path tracing) is enabled: id:0x40 load_in:0x0 load_out:0x0 tts:0x1
  Forwarding is enabled
  ICMP redirects are never sent
  ICMP unreachables are enabled
  Protocol MTU 1500, TableId 0xe0000000(0x61ccf768)
  Protocol Reference count 4
  Primary IPV4 local address 10.10.10.1
```

```
Router# show performance-measurement interfaces
Interface Name: GigabitEthernet0/2/0/0 (ifh: 0x1000020)
  Delay-Measurement                 : Disabled
  Loss-Measurement                  : Disabled
  Path-Tracing                      : Enabled
  Configured IPv4 Address           : 10.10.10.1
  Configured IPv6 Address           : 10:10:10::1
  Link Local IPv6 Address           : fe80::91:e4ff:fe60:6707
  Configured Next-hop Address       : Unknown
  Local MAC Address                 : 0291.e460.6707
  Next-hop MAC Address              : 023a.6fc9.cd6b
  In-use Source Address             : 10.10.10.1
  In-use Destination Address        : 10.10.10.2
  Primary VLAN Tag                  : None
  Secondary VLAN Tag                : None
  State                             : Up

  Path-Tracing:
    Interface ID                      : 64
    Load IN                           : 0
    Load OUT                          : 0
    Load Interval                     : 60
    Last FIB Update:
      Updated at: Mar 04 2022 13:34:43.112 (0.392 seconds ago)
      Update reason: Path tracing config
      Update status: Done
```

This is an example of Show CLI without InterfaceID, which means PT is disabled on the target interface. So, you can configure timestamp template:

```
Router# show cef interface GigabitEthernet 0/2/0/0
GigabitEthernet0/2/0/0 is up if_handle 0x01000020 if_type IFT_GETHERNET(0xf)
  idb info 0x619f16f0 flags 0x30101 ext 0x627ef180 flags 0x30050
  Vrf Local Info (0x626510f0)
  Interface last modified Mar  4, 2022 13:49:37, modify
  Reference count 1       Next-Hop Count 3
  Forwarding is enabled
  ICMP redirects are never sent
  ICMP unreachables are enabled
  Protocol MTU 1500, TableId 0xe0000000(0x61ccf768)
  Protocol Reference count 4
  Primary IPV4 local address 10.10.10.1

Router# sh performance-measurement interfaces
Interface Name: GigabitEthernet0/2/0/0 (ifh: 0x1000020)
  Delay-Measurement                 : Disabled
  Loss-Measurement                  : Disabled
  Path-Tracing                      : Enabled
  Configured IPv4 Address           : 10.10.10.1
  Configured IPv6 Address           : 10:10:10::1
  Link Local IPv6 Address           : fe80::91:e4ff:fe60:6707
  Configured Next-hop Address       : Unknown
  Local MAC Address                 : 0291.e460.6707
  Next-hop MAC Address              : 023a.6fc9.cd6b
  In-use Source Address             : 10.10.10.1
  In-use Destination Address        : 10.10.10.2
  Primary VLAN Tag                  : None
  Secondary VLAN Tag                : None
  State                             : Up

  Path-Tracing:
    Interface ID                      : 0
    Timestamp Template                : 3
    Load IN                           : 0
    Load OUT                          : 0
    Load Interval                     : 60
    Last FIB Update:
      Updated at: Mar 04 2022 13:49:37.492 (176.418 seconds ago)
      Update reason: Path tracing config
      Update status: Done
```

CHAPTER 16

# Configure Topology-Independent Loop-Free Alternate (TI-LFA)

Topology-Independent Loop-Free Alternate (TI-LFA) uses segment routing to provide link, node, and Shared Risk Link Groups (SRLG) protection in topologies where other fast reroute techniques cannot provide protection.

- Classic Loop-Free Alternate (LFA) is topology dependent, and therefore cannot protect all destinations in all networks. A limitation of LFA is that, even if one or more LFAs exist, the optimal LFA may not always be provided.
- Remote LFA (RLFA) extends the coverage to 90-95% of the destinations, but it also does not always provide the most desired repair path. RLFA also adds more operational complexity by requiring a targeted LDP session to the RLFAs to protect LDP traffic.

TI-LFA provides a solution to these limitations while maintaining the simplicity of the IPFRR solution.

The goal of TI-LFA is to reduce the packet loss that results while routers converge after a topology change due to a link or node failure. Rapid failure repair (< 50 msec) is achieved through the use of pre-calculated backup paths that are loop-free and safe to use until the distributed network convergence process is completed.

The optimal repair path is the path that the traffic will eventually follow after the IGP has converged. This is called the post-convergence path. This path is preferred for the following reasons:

- Optimal for capacity planning — During the capacity-planning phase of the network, the capacity of a link is provisioned while taking into consideration that such link with be used when other links fail.
- Simple to operate — There is no need to perform a case-by-case adjustments to select the best LFA among multiple candidate LFAs.
- Fewer traffic transitions — Since the repair path is equal to the post-convergence path, the traffic switches paths only once.

The following topology illustrates the optimal and automatic selection of the TI-LFA repair path.

*Figure 40: TI-LFA Repair Path*

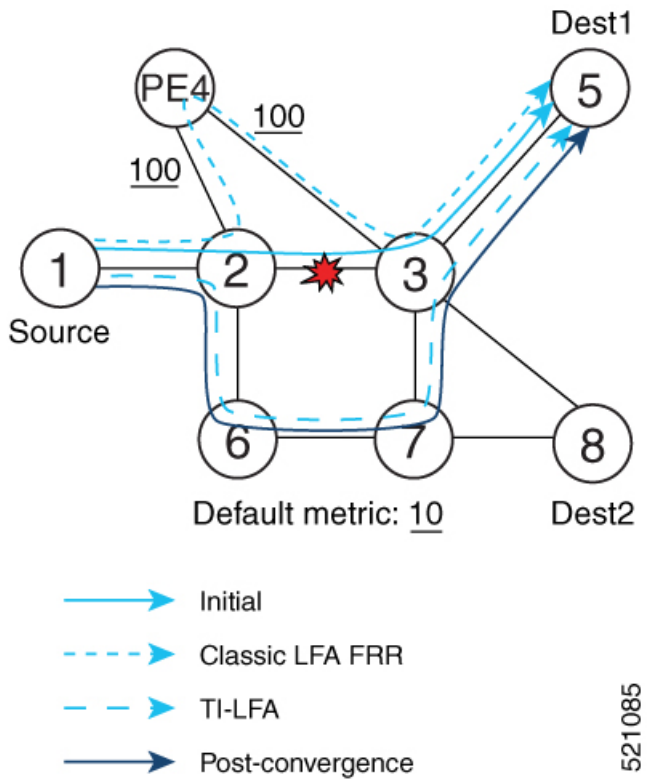


Node 2 protects traffic to destination Node 5.

With classic LFA, traffic would be steered to Node 4 after a failure of the protected link. This path is not optimal, since traffic is routed over edge node Node 4 that is connected to lower capacity links.

TI-LFA calculates a post-convergence path and derives the segment list required to steer packets along the post-convergence path without looping back.

In this example, if the protected link fails, the shortest path from Node2 to Node5 would be:

Node2 → Node6 → Node7 → Node3 → Node5

Node7 is the PQ-node for destination Node5. TI-LFA encodes a single segment (prefix SID of Node7) in the header of the packets on the repair path.

### TI-LFA Protection Types

TI-LFA supports the following protection:

- Link protection — The link is excluded during the post-convergence backup path calculation.
- Node protection — The neighbor node is excluded during the post convergence backup path calculation.
- Shared Risk Link Groups (SRLG) protection — SRLG refer to situations in which links in a network share a common fiber (or a common physical attribute). These links have a shared risk: when one link fails, other links in the group might also fail. TI-LFA SRLG protection attempts to find the post-convergence backup path that excludes the SRLG of the protected link. All local links that share any SRLG with the protecting link are excluded.

When you enable link protection, you can also enable node protection, SRLG protection, or both, and specify a tiebreaker priority in case there are multiple LFAs.

The following example illustrates the link, node, and SRLG protection types. In this topology, Node2 applies different protection models to protect traffic to Node7.

***Figure 41: TI-LFA Protection Types***

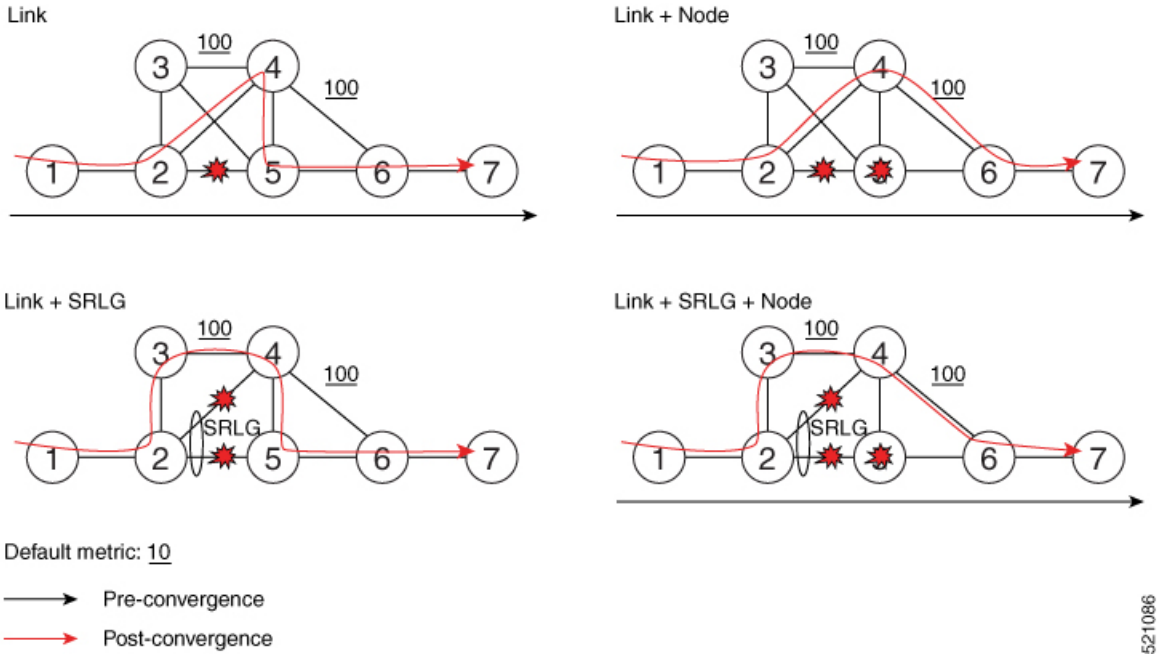



- Usage Guidelines and Limitations, on page 555
- Configuring TI-LFA for IS-IS, on page 557
- Configuring TI-LFA for OSPF, on page 558
- TI-LFA Node and SRLG Protection: Examples, on page 560
- Configuring Global Weighted SRLG Protection, on page 561
- SR-MPLS over GRE as TI-LFA Backup Path, on page 563
- Unlabeled IPv6 Traffic Protection, on page 574


# Usage Guidelines and Limitations

The TI-LFA guidelines and limitations are listed below:

- IGP directly programs a TI-LFA backup path requiring 3 or fewer labels, including the label of the protected destination prefix.
- IGP automatically instantiates an SR-TE policy to program a TI-LFA backup path with up to 10 labels, including the label of the protected destination prefix.

| TI-LFA Functionality | IS-IS[1] | OSPFv2 |
|---|---|---|
| ***Protected Traffic Types*** | | |
| Protection for SR labeled traffic | Supported | Supported |

| TI-LFA Functionality | IS-IS[1] | OSPFv2 |
|---|---|---|
| Protection of IPv4 unlabeled traffic | Supported (IS-ISv4) | Supported |
| Protection of IPv6 unlabeled traffic | Supported (IS-ISv6) | N/A |
| ***Protection Types*** | | |
| Link Protection | Supported | Supported |
| Node Protection | Supported | Supported |
| Local SRLG Protection | Supported | Supported |
| Weighted Remote SRLG Protection | Supported | Supported |
| Line Card Disjoint Protection | Supported | Unsupported |
| ***Interface Types*** | | |
| Ethernet Interfaces | Supported | Supported |
| TI-LFA with L3VPN | Supported | Supported |
| Ethernet Bundle Interfaces | Supported | Supported |
| TI-LFA over GRE Tunnel as Protecting Interface | Supported | Supported |
| Bridge Virtual Interfaces (BVI) | Unsupported | Unsupported |
| Network Virtualization (nV) Satellite Access Interfaces | Unsupported | Unsupported |
| ***Additional Functionality*** | | |
| Maximum number of labels that can be pushed on the backup path (including the label of the protected prefix) | 10 | 10 |
| BFD-triggered | Supported | Supported |
| BFDv6-triggered | Supported | N/A |
| Prefer backup path with lowest total metric | Supported | Supported |
| Prefer backup path from ECMP set | Supported | Supported |
| Prefer backup path from non-ECMP set | Supported | Supported |
| Load share prefixes across multiple backups paths | Supported | Supported |
| Limit backup computation up to the prefix priority | Supported | Supported |

[1] Unless specified, IS-IS support is IS-ISv4 and IS-ISv6

# Configuring TI-LFA for IS-IS

This task describes how to enable per-prefix Topology Independent Loop-Free Alternate (TI-LFA) computation to converge traffic flows around link, node, and SRLG failures.

### Before you begin

Ensure that the following topology requirements are met:

- Routers are configured with IS-IS.
- Segment routing for IS-IS is configured. See Enabling Segment Routing for IS-IS Protocol, on page 213.
- Enter the **ipv4 unnumbered mpls traffic-eng Loopback** *interface* command in global configuration mode to specify the default source address of the automatic SR-TE Policy used to program a microloop avoidant path. The range for the loopback *interface* is from 0 to 2147483647.

```
Router(config)# ipv4 unnumbered mpls traffic-eng Loopback0
```

## SUMMARY STEPS

1. **configure**
2. **router isis** *instance-id*
3. **interface** *type interface-path-id*
4. **address-family ipv4** [**unicast**]
5. **fast-reroute per-prefix**
6. **fast-reroute per-prefix ti-lfa**
7. **fast-reroute per-prefix tiebreaker** {**node-protecting** | **srlg-disjoint**} **index** *priority*

## DETAILED STEPS

| | Command or Action | Purpose |
|---|---|---|
| **Step 1** | **configure**<br>**Example:**<br>`RP/0/RSP0/CPU0:router# configure` | Enters global configuration mode. |
| **Step 2** | **router isis** *instance-id*<br>**Example:**<br>`RP/0/RSP0/CPU0:router(config)# router isis 1` | Enables IS-IS routing for the specified routing instance, and places the router in router configuration mode.<br>**Note** You can change the level of routing to be performed by a particular routing instance by using the **is-type** router configuration command. |
| **Step 3** | **interface** *type interface-path-id*<br>**Example:**<br>`RP/0/RSP0/CPU0:router(config-isis)# interface GigabitEthernet0/0/2/1` | Enters interface configuration mode.<br>**Note** You can configure TI-LFA under Ethernet-based interfaces and logical Bundle-Ethernet interfaces. |

| | Command or Action | Purpose |
|---|---|---|
| | `RP/0/RSP0/CPU0:router(config-isis)# interface Bundle-Ether1` | |
| **Step 4** | **address-family ipv4** [**unicast**]<br>**Example:**<br>`RP/0/RSP0/CPU0:router(config-isis-if)# address-family ipv4 unicast` | Specifies the IPv4 address family, and enters router address family configuration mode. |
| **Step 5** | **fast-reroute per-prefix**<br>**Example:**<br>`RP/0/RSP0/CPU0:router(config-isis-if-af)# fast-reroute per-prefix` | Enables per-prefix fast reroute. |
| **Step 6** | **fast-reroute per-prefix ti-lfa**<br>**Example:**<br>`RP/0/RSP0/CPU0:router(config-isis-if-af)# fast-reroute per-prefix ti-lfa` | Enables per-prefix TI-LFA fast reroute link protection. |
| **Step 7** | **fast-reroute per-prefix tiebreaker** {**node-protecting** \| **srlg-disjoint**} **index** *priority*<br>**Example:**<br>`RP/0/RSP0/CPU0:router(config-isis-if-af)# fast-reroute per-prefix tie-breaker srlg-disjoint index 100` | Enables TI-LFA node or SRLG protection and specifies the tiebreaker priority. Valid *priority* values are from 1 to 255. The lower the *priority* value, the higher the priority of the rule. Link protection always has a lower priority than node or SRLG protection.<br>**Note** The same attribute cannot be configured more than once on an interface.<br>**Note** For IS-IS, TI-LFA node protection and SRLG protection can be configured on the interface or the instance. |

TI-LFA has been successfully configured for segment routing.

# Configuring TI-LFA for OSPF

This task describes how to enable per-prefix Topology Independent Loop-Free Alternate (TI-LFA) computation to converge traffic flows around link, node, and SRLG failures.

**Note** TI-LFA can be configured on the instance, area, or interface. When configured on the instance or area, all interfaces in the instance or area inherit the configuration.

### Before you begin

Ensure that the following topology requirements are met:

- Routers are configured with OSPF.
- Segment routing for OSPF is configured. See Enabling Segment Routing for OSPF Protocol, on page 237.
- Enter the **ipv4 unnumbered mpls traffic-eng Loopback** *interface* command in global configuration mode to specify the default source address of the automatic SR-TE Policy used to program a microloop avoidant path. The range for the loopback *interface* is from 0 to 2147483647.

```
Router(config)# ipv4 unnumbered mpls traffic-eng Loopback0
```

## SUMMARY STEPS

1. **configure**
2. **router ospf** *process-name*
3. **area** *area-id*
4. **interface** *type interface-path-id*
5. **fast-reroute per-prefix**
6. **fast-reroute per-prefix ti-lfa**
7. **fast-reroute per-prefix tiebreaker** {**node-protecting** | **srlg-disjoint**} **index** *priority*

## DETAILED STEPS

| | Command or Action | Purpose |
|---|---|---|
| **Step 1** | **configure**<br>**Example:**<br>`RP/0/RSP0/CPU0:router# configure` | Enters global configuration mode. |
| **Step 2** | **router ospf** *process-name*<br>**Example:**<br>`RP/0/RSP0/CPU0:router(config)# router ospf 1` | Enables OSPF routing for the specified routing process, and places the router in router configuration mode. |
| **Step 3** | **area** *area-id*<br>**Example:**<br>`RP/0/RSP0/CPU0:router(config-ospf)# area 1` | Enters area configuration mode. |
| **Step 4** | **interface** *type interface-path-id*<br>**Example:**<br>`RP/0/RSP0/CPU0:router(config-ospf-ar)# interface GigabitEthernet0/0/2/1`<br>`RP/0/RSP0/CPU0:router(config-ospf-ar)# interface` | Enters interface configuration mode.<br>**Note** You can configure TI-LFA under Ethernet-based interfaces and logical Bundle-Ethernet interfaces. |

| | Command or Action | Purpose |
|---|---|---|
| | `Bundle-Ether1` | |
| **Step 5** | **fast-reroute per-prefix**<br>**Example:**<br>`RP/0/RSP0/CPU0:router(config-ospf-ar-if)#`<br>**`fast-reroute per-prefix`** | Enables per-prefix fast reroute. |
| **Step 6** | **fast-reroute per-prefix ti-lfa**<br>**Example:**<br>`RP/0/RSP0/CPU0:router(config-ospf-ar-if)#`<br>**`fast-reroute per-prefix ti-lfa`** | Enables per-prefix TI-LFA fast reroute link protection. |
| **Step 7** | **fast-reroute per-prefix tiebreaker** {**node-protecting** \| **srlg-disjoint**} **index** *priority*<br>**Example:**<br>`RP/0/RSP0/CPU0:router(config-ospf-ar-if)#`<br>**`fast-reroute per-prefix tie-breaker srlg-disjoint index 100`** | Enables TI-LFA node or SRLG protection and specifies the tiebreaker priority. Valid *priority* values are from 1 to 255. The higher the *priority* value, the higher the priority of the rule. Link protection always has a lower priority than node or SRLG protection.<br>**Note** The same attribute cannot be configured more than once on an interface. |

TI-LFA has been successfully configured for segment routing.

# TI-LFA Node and SRLG Protection: Examples

The following examples show the configuration of the tiebreaker priority for TI-LFA node and SRLG protection, and the behavior of post-convergence backup-path. These examples use OSPF, but the same configuration and behavior applies to IS-IS.

### Example: Enable link-protecting and node-protecting TI-LFA

```
router ospf 1
 area 1
  interface GigabitEthernet0/0/2/1
    fast-reroute per-prefix
    fast-reroute per-prefix ti-lfa
    fast-reroute per-prefix tiebreaker node-protecting index 100
```

Both link-protecting and node-protecting TI-LFA backup paths will be computed. If the priority associated with the node-protecting tiebreaker is higher than any other tiebreakers, then node-protecting post-convergence backup paths will be selected, if it is available.

### Example: Enable link-protecting and SRLG-protecting TI-LFA

```
router ospf 1
 area 1
```

```
  interface GigabitEthernet0/0/2/1
    fast-reroute per-prefix
    fast-reroute per-prefix ti-lfa
    fast-reroute per-prefix tiebreaker srlg-disjoint index 100
```

Both link-protecting and SRLG-protecting TI-LFA backup paths will be computed. If the priority associated with the SRLG-protecting tiebreaker is higher than any other tiebreakers, then SRLG-protecting post-convergence backup paths will be selected, if it is available.

#### Example: Enable link-protecting, node-protecting and SRLG-protecting TI-LFA

```
router ospf 1
 area 1
  interface GigabitEthernet0/0/2/1
    fast-reroute per-prefix
    fast-reroute per-prefix ti-lfa
    fast-reroute per-prefix tiebreaker node-protecting index 200
    fast-reroute per-prefix tiebreaker srlg-disjoint index 100
```

Link-protecting, node-protecting, and SRLG-protecting TI-LFA backup paths will be computed. If the priority associated with the node-protecting tiebreaker is highest from all tiebreakers, then node-protecting post-convergence backup paths will be selected, if it is available. If the node-protecting backup path is not available, SRLG-protecting post-convergence backup path will be used, if it is available.

# Configuring Global Weighted SRLG Protection

A shared risk link group (SRLG) is a set of links sharing a common resource and thus shares the same risk of failure. The existing loop-free alternate (LFA) implementations in interior gateway protocols (IGPs) support SRLG protection. However, the existing implementation considers only the directly connected links while computing the backup path. Hence, SRLG protection may fail if a link that is not directly connected but shares the same SRLG is included while computing the backup path. Global weighted SRLG protection feature provides better path selection for the SRLG by associating a weight with the SRLG value and using the weights of the SRLG values while computing the backup path.

To support global weighted SRLG protection, you need information about SRLGs on all links in the area topology. For IS-IS, you can flood SRLGs for remote links or manually configuring SRLGs on remote links.

The administrative weight (cost) of the SRLG can be configured using the **admin-weight** command. This command can be applied for all SRLG (global), or for a specific (named) SRLG. The default (global) admin-weight value is 1 for IS-IS.

#### Configuration Examples: Global Weighted SRLG Protection for IS-IS

There are three types of configurations that are supported for the global weighted SRLG protection feature for IS-IS:

- Local SRLG with global weighted SRLG protection
- Remote SRLG flooding
- Remote SRLG static provisioning

This example shows how to configure the local SRLG with global weighted SRLG protection feature.

```
RP/0/RP0/CPU0:router(config)# srlg
RP/0/RP0/CPU0:router(config-srlg)# interface TenGigE0/0/0/0
RP/0/RP0/CPU0:router(config-srlg-if)# name group1
RP/0/RP0/CPU0:router(config-srlg-if)# exit
RP/0/RP0/CPU0:router(config-srlg)# interface TenGigE0/0/0/1
RP/0/RP0/CPU0:router(config-srlg-if)# name group1
RP/0/RP0/CPU0:router(config-srlg)# exit
RP/0/RP0/CPU0:router(config-srlg)# name group1 value 100
RP/0/RP0/CPU0:router(config-srlg)# exit
RP/0/RP0/CPU0:router(config)# router isis 1
RP/0/RP0/CPU0:router(config-isis)# address-family ipv4 unicast
RP/0/RP0/CPU0:router(config-isis-af)# fast-reroute per-prefix srlg-protection weighted-global
RP/0/RP0/CPU0:router(config-isis-af)# fast-reroute per-prefix tiebreaker srlg-disjoint index
 1
RP/0/RP0/CPU0:router(config-isis-af)# exit
RP/0/RP0/CPU0:router(config-isis)# interface TenGigE0/0/0/0
RP/0/RP0/CPU0:router(config-isis-if)# point-to-point
RP/0/RP0/CPU0:router(config-isis-if)# address-family ipv4 unicast
RP/0/RP0/CPU0:router(config-isis-if-af)# fast-reroute per-prefix
RP/0/RP0/CPU0:router(config-isis-if-af)# fast-reroute per-prefix ti-lfa
RP/0/RP0/CPU0:router(config-isis-if-af)# exit
RP/0/RP0/CPU0:router(config-isis-if)# exit
RP/0/RP0/CPU0:router(config-isis)# srlg
RP/0/RP0/CPU0:router(config-isis-srlg)# name group1
RP/0/RP0/CPU0:router(config-isis-srlg-name)# admin-weight 5000
```

This example shows how to configure the global weighted SRLG protection feature with remote SRLG flooding. The configuration includes local and remote router configuration. On the local router, the global weighted SRLG protection is enabled by using the **fast-reroute per-prefix srlg-protection weighted-global** command. In the remote router configuration, you can control the SRLG value flooding by using the **advertise application lfa link-attributes srlg** command. You should also globally configure SRLG on the remote router.

The local router configuration for global weighted SRLG protection with remote SRLG flooding is as follows:

```
RP/0/RP0/CPU0:router(config)# router isis 1
RP/0/RP0/CPU0:router(config-isis)# address-family ipv4 unicast
RP/0/RP0/CPU0:router(config-isis-af)# fast-reroute per-prefix srlg-protection weighted-global
RP/0/RP0/CPU0:router(config-isis-af)# fast-reroute per-prefix tiebreaker srlg-disjoint index
 1
RP/0/RP0/CPU0:router(config-isis-af)# exit
RP/0/RP0/CPU0:router(config-isis)# interface TenGigE0/0/0/0
RP/0/RP0/CPU0:router(config-isis-if)# point-to-point
RP/0/RP0/CPU0:router(config-isis-if)# address-family ipv4 unicast
RP/0/RP0/CPU0:router(config-isis-if-af)# fast-reroute per-prefix
RP/0/RP0/CPU0:router(config-isis-if-af)# fast-reroute per-prefix ti-lfa
RP/0/RP0/CPU0:router(config-isis-if-af)# exit
RP/0/RP0/CPU0:router(config-isis-if)# exit
RP/0/RP0/CPU0:router(config-isis)# srlg
RP/0/RP0/CPU0:router(config-isis-srlg)# name group1
RP/0/RP0/CPU0:router(config-isis-srlg-name)# admin-weight 5000
```

The remote router configuration for global weighted SRLG protection with remote SRLG flooding is as follows:

```
RP/0/RP0/CPU0:router(config)# srlg
RP/0/RP0/CPU0:router(config-srlg)# interface TenGigE0/0/0/0
RP/0/RP0/CPU0:router(config-srlg-if)# name group1
RP/0/RP0/CPU0:router(config-srlg-if)# exit
RP/0/RP0/CPU0:router(config-srlg)# interface TenGigE0/0/0/1
```

```
RP/0/RP0/CPU0:router(config-srlg-if)# name group1
RP/0/RP0/CPU0:router(config-srlg-if)# exit
RP/0/RP0/CPU0:router(config-srlg)# name group1 value 100
RP/0/RP0/CPU0:router(config-srlg)# exit
RP/0/RP0/CPU0:router(config)# router isis 1
RP/0/RP0/CPU0:router(config-isis)# address-family ipv4 unicast
RP/0/RP0/CPU0:router(config-isis-af)# advertise application lfa link-attributes srlg
```

This example shows configuring the global weighted SRLG protection feature with static provisioning of SRLG values for remote links. You should perform these configurations on the local router.

```
RP/0/RP0/CPU0:router(config)# srlg
RP/0/RP0/CPU0:router(config-srlg)# interface TenGigE0/0/0/0
RP/0/RP0/CPU0:router(config-srlg-if)# name group1
RP/0/RP0/CPU0:router(config-srlg-if)# exit
RP/0/RP0/CPU0:router(config-srlg)# interface TenGigE0/0/0/1
RP/0/RP0/CPU0:router(config-srlg-if)# name group1
RP/0/RP0/CPU0:router(config-srlg-if)# exit
RP/0/RP0/CPU0:router(config-srlg)# name group1 value 100
RP/0/RP0/CPU0:router(config-srlg)# exit
RP/0/RP0/CPU0:router(config)# router isis 1
RP/0/RP0/CPU0:router(config-isis)# address-family ipv4 unicast
RP/0/RP0/CPU0:router(config-isis-af)# fast-reroute per-prefix srlg-protection weighted-global
RP/0/RP0/CPU0:router(config-isis-af)# fast-reroute per-prefix tiebreaker srlg-disjoint index
 1
RP/0/RP0/CPU0:router(config-isis-af)# exit
RP/0/RP0/CPU0:router(config-isis)# interface TenGigE0/0/0/0
RP/0/RP0/CPU0:router(config-isis-if)# point-to-point
RP/0/RP0/CPU0:router(config-isis-if)# address-family ipv4 unicast
RP/0/RP0/CPU0:router(config-isis-if-af)# fast-reroute per-prefix
RP/0/RP0/CPU0:router(config-isis-if-af)# fast-reroute per-prefix ti-lfa
RP/0/RP0/CPU0:router(config-isis-if-af)# exit
RP/0/RP0/CPU0:router(config-isis-if)# exit
RP/0/RP0/CPU0:router(config-isis)# srlg
RP/0/RP0/CPU0:router(config-isis-srlg)# name group1
RP/0/RP0/CPU0:router(config-isis-srlg-name)# admin-weight 5000
RP/0/RP0/CPU0:router(config-isis-srlg-name)# static ipv4 address 10.0.4.1 next-hop ipv4
address 10.0.4.2
RP/0/RP0/CPU0:router(config-isis-srlg-name)# static ipv4 address 10.0.4.2 next-hop ipv4
address 10.0.4.1
```

# SR-MPLS over GRE as TI-LFA Backup Path

*Table 75: Feature History Table*

| Feature Name | Release Information | Feature Description |
|---|---|---|
| SR-MPLS over GRE as TI-LFA Backup Path | Release 7.3.1 | This feature allows the router (as ABR) to program a Generic Routing Encapsulation (GRE) tunnel as an outgoing interface for TI-LFA backup paths computed by the IGP in a Segment Routing network. |

### Multi-Level Network Topology

The following example shows a multi-level network topology with interconnecting links between ABRs.

**Note** This could also be a multi-instance network topology.

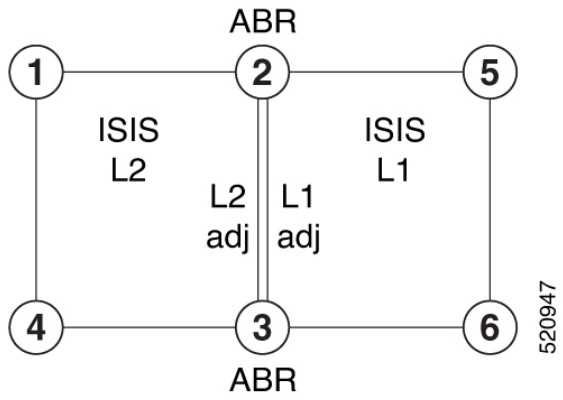


Two links between ABR 2 and ABR 3 are required, one in each IS-IS level. These links provide protection in each direction and ensure that there is always an alternate path inside the IGP domain.

**Note** Alternatively, a single link with two logical sub-interfaces could be used between the ABRs.

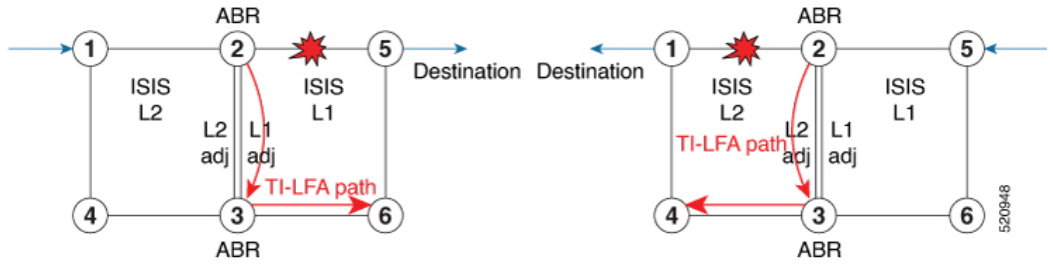


TI-LFA performs the backup path calculation inside the domain (process, level, or area) of the failed link.

For example, if the link between nodes 2 and 5 failed, the link between ABR 2 and 3 would create a TI-LFA path in L1 IS-IS level. If the link between nodes 1 and 2 failed, the link between ABR 2 and 3 would create a TI-LFA path in L2 IS-IS level.

However, if the interconnecting link between ABRs are in the same Shared Risk Link Groups (SRLG) as other links inside the domain (for example, the link between Nodes 2 and 3 are in the same SRLG as link between Nodes 2 and 5), TI-LFA with local SRLG protection would not find an alternate path.

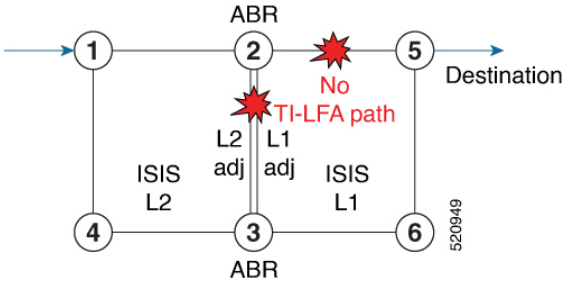


In cases where it is not feasible to provide interconnecting links between ABRs (for example, the ABR nodes might be in different locations with no connectivity options), TI-LFA will not be able to compute backup paths for all of the prefixes.

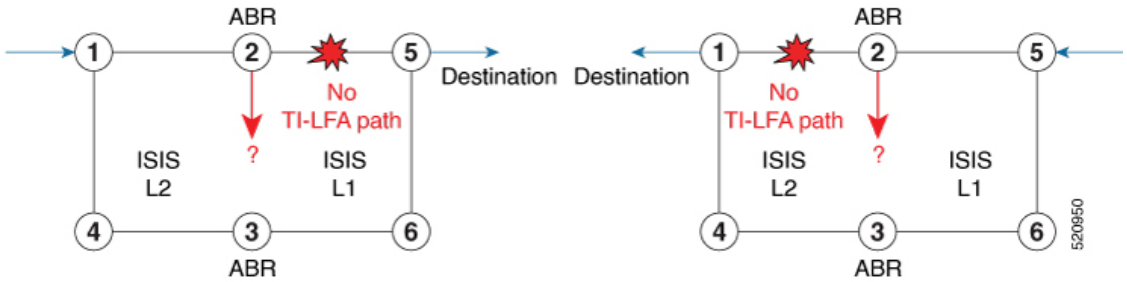


To address these issues, you can create a GRE tunnel in each domain, between the ABRs, which can be used as TI-LFA backup paths.

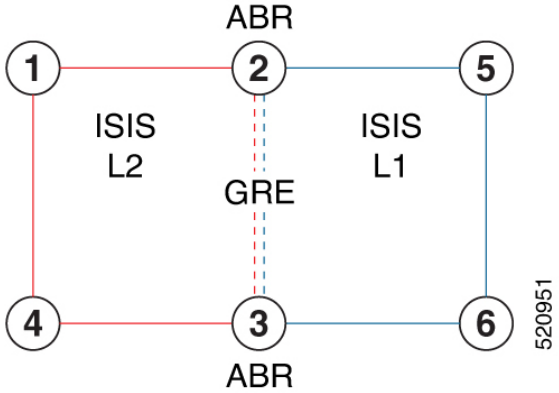


Now, if a link failure occurs in either IS-IS level (for example, between nodes 1 and 2 or between nodes 2 and 5), the path is protected by the GRE tunnel.

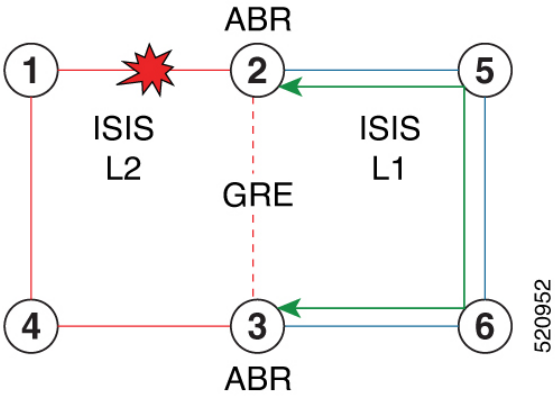


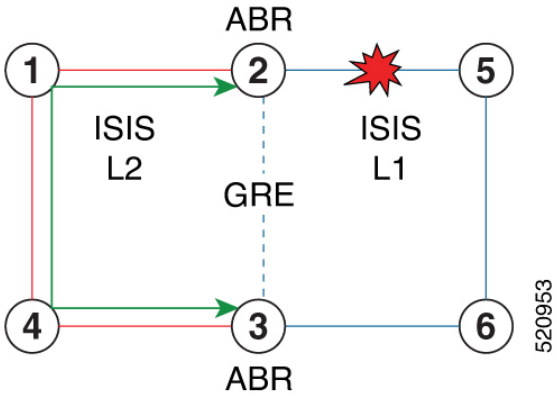


**Backup Path for Link Failure Between Nodes 2 and 5**

Traffic from node 1 is rerouted over the GRE tunnel TI-LFA backup path between ABR nodes 2 and 3.

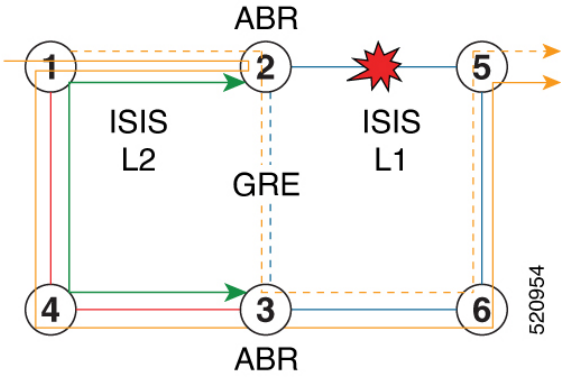


Traffic flowing in the opposite direction, from node 5 to node 1, is simply routed over nodes 6-3-4 to node 1.

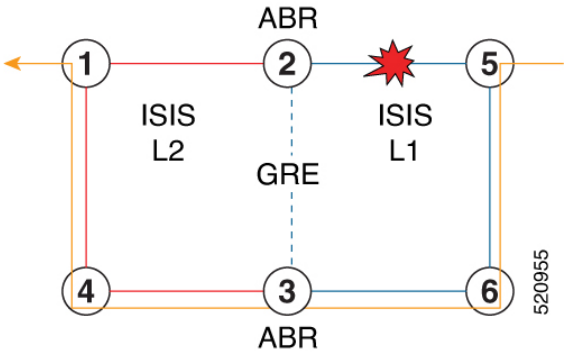


# Limitations

The following behaviors and limitations apply to the router when a GRE tunnel is programmed as backup interface for TI-LFA:

- The MPLS label of a protected prefix must be the same in the primary and backup paths (SWAP scenario)

- Single-segment TI-LFA is supported. In this scenario, the router pushes one extra label when programming the backup path. The total label stack is 2, including the primary label and backup label.
- Double-segment (or more) TI-LFA is not supported. In this scenario, the router pushes two or more extra labels when programming the backup path.
- GRE tunnel as a primary or backup path for an SR policy with TI-LFA protection is not supported.

# Example: SR-MPLS over GRE as TI-LFA Backup Path

The examples in this section use the following network topology:

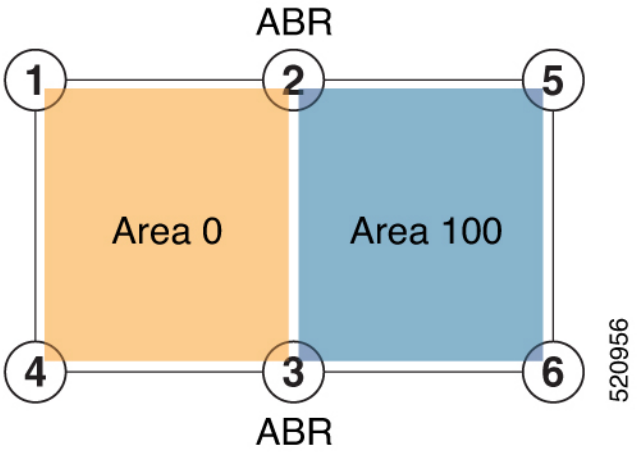


### Configurations Without Interconnecting ABR Links

The following sample configurations show OSPF configurations for nodes 2, 3 and 5. Nodes 2 and 3 are ABRs between Area 0 and Area 100. There is no connection between the ABRs.

**Configuration on ABR 2 for Area 0 and Area 100**

```
router ospf 100
 router-id 2.2.2.2
 segment-routing mpls
 segment-routing forwarding mpls
 fast-reroute per-prefix
 fast-reroute per-prefix ti-lfa enable
 segment-routing sr-prefer
 area 0
  interface Loopback0
   prefix-sid index 2
  !
 !
  interface TenGigE0/0/1/10
   network point-to-point
  !
 !
 area 100
  interface TenGigE0/0/1/11
    network point-to-point
```

```
RP/0/RSP0/CPU0:ABR2# show ospf neighbor area-sorted
Fri Jul 19 09:43:59.328 UTC

Neighbors for OSPF 100
Area 0

Neighbor ID     Pri State    Dead Time Address         Up Time  Interface
10.1.1.1        1   FULL/  - 00:00:35  10.1.2.1        1d20h    Te0/0/1/10

Total neighbor count: 1

Area 100

Neighbor ID     Pri State    Dead Time Address         Up Time  Interface
5.5.5.5         1   FULL/  - 00:00:33  10.2.5.5        1d20h    Te0/0/1/11

Total neighbor count: 1
```

### Configuration on ABR 3 for Area 0 and Area 100

```
router ospf 100
 router-id 3.3.3.3
 segment-routing mpls
 segment-routing forwarding mpls
 fast-reroute per-prefix
 fast-reroute per-prefix ti-lfa enable
 segment-routing sr-prefer
 area 0
   interface Loopback0
   prefix-sid index 3
  !
  interface TenGigE0/0/0/9
  network point-to-point
  !
 !
 area 100
  interface TenGigE0/0/0/3
  network point-to-point
 !
```

```
RP/0/RSP0/CPU0:ABR3# show ospf neighbor area-sorted
Fri Jul 19 09:33:35.816 UTC

Neighbors for OSPF 100
Area 0

Neighbor ID     Pri State    Dead Time Address         Up Time  Interface
4.4.4.4         1   FULL/  - 00:00:36  10.3.4.4        2d17h    Te0/0/0/9

Total neighbor count: 1

Area 100

Neighbor ID     Pri State    Dead Time Address         Up Time  Interface
6.6.6.6         1   FULL/  - 00:00:36  10.3.6.6        2d19h    Te0/0/0/3

Total neighbor count: 1
```

### Configuration on Node 5

```
segment-routing mpls
 !
 set-attributes
  address-family ipv4
   sr-label-preferred
```

```
 !
 connected-prefix-sid-map
  address-family ipv4
   5.5.5.5/32 index 5 range 1
 !
interface TenGigabitEthernet0/0/26
 description ***Connected to ABR 2
 ip address 10.2.5.5 255.255.255.0
 ip ospf network point-to-point
 cdp enable
!
interface TenGigabitEthernet0/0/27
 description ***Connected to Node 6
 ip address 10.5.6.5 255.255.255.0
 ip ospf network point-to-point
 cdp enable

router ospf 100
 router-id 5.5.5.5
 segment-routing area 100 mpls
 segment-routing mpls
 fast-reroute per-prefix enable prefix-priority low
 fast-reroute per-prefix ti-lfa
 fast-reroute per-prefix ti-lfa area 100
 passive-interface default
 no passive-interface TenGigabitEthernet0/0/26
 no passive-interface TenGigabitEthernet0/0/27
 network 10.2.5.0 0.0.0.255 area 100
 network 10.5.5.0 0.0.0.255 area 100
 network 10.5.6.0 0.0.0.255 area 100
 network 5.5.5.5 0.0.0.0 area 100


RP/0/RSP0/CPU0:Node5# show ip ospf neighbor
Load for five secs: 4%/1%; one minute: 4%; five minutes: 4%
Time source is NTP, 09:50:51.417 UTC Fri Jul 19 2019

Neighbor ID   Pri   State      Dead Time   Address         Interface
6.6.6.6         0   FULL/  -   00:00:32    10.5.6.6        TenGigabitEthernet0/0/27
2.2.2.2         0   FULL/  -   00:00:36    10.5.2.5        TenGigabitEthernet0/0/26
```

### TI-LFA Fast Reroute Coverage on Node 5

The following output shows that this configuration provides only 52% TI-LFA fast reroute coverage on Node 5:

```
RP/0/RSP0/CPU0:Node5# show ip ospf fast-reroute prefix-summary
Load for five secs: 4%/1%; one minute: 4%; five minutes: 4%
Time source is NTP, 10:32:20.236 UTC Fri Jul 19 2019
            OSPF Router with ID (5.5.5.5) (Process ID 100)
                    Base Topology (MTID 0)
Area 100:
Interface        Protected    Primary paths    Protected paths Percent protected
                             All  High   Low   All  High   Low    All High  Low
Lo0                    Yes     0     0     0     0     0     0     0%   0%   0%
Te0/0/27               Yes     7     4     3     1     1     0    14%  25%   0%
Te0/0/26               Yes    10     5     5     8     4     4    80%  80%  80%

Area total:                   17     9     8     9     5     4    52%  55%  50%

Process total:                17     9     8     9     5     4    52%  55%  50%
```

### GRE Tunnel Configuration

The following examples show how to configure GRE tunnels between the ABRs in each area to provide TI-LFA backup paths for the Segment Routing network.

**GRE BLU** is configured in Area 0 using Loopback50 (on ABR2) and Loopback 60 (on ABR 3). These loopbacks are advertised in Area 100:

*Figure 42: GRE BLU*

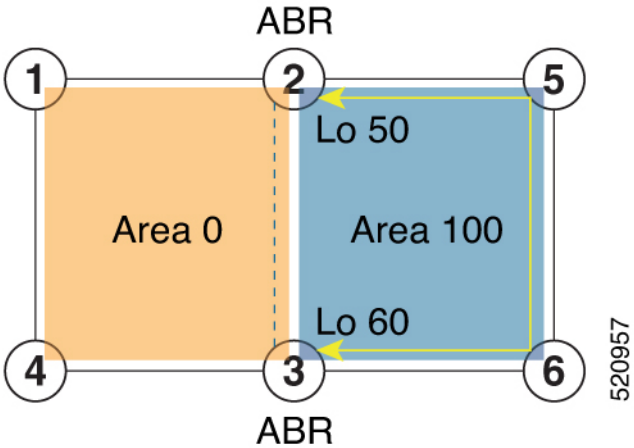


**GRE RED** is configured in Area 100 using Loopback55 (on ABR2) and Loopback 66 (on ABR3). These loopbacks are advertised in Area 0:

*Figure 43: GRE RED*

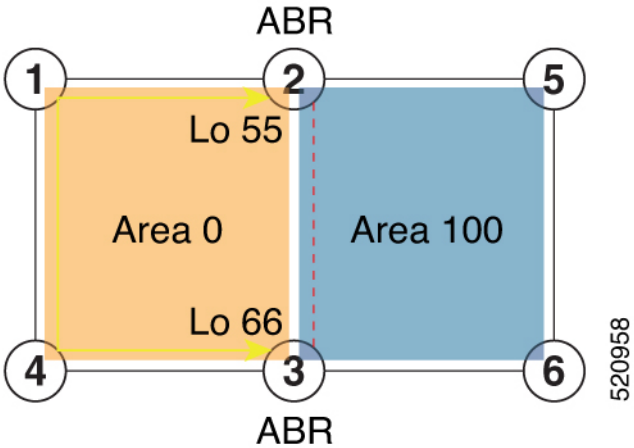


### Configuration on ABR 2

```
interface Loopback0
 ipv4 address 2.2.2.2 255.255.255.255
!
interface Loopback50
 description Lo for GRE BLU
 ipv4 address 50.0.0.50 255.255.255.0
!
interface Loopback55
```

```
 description Lo for GRE RED
 ipv4 address 55.55.55.55 255.255.255.255
!
interface tunnel-ip5060
 description GRE virtual link for Area 0 BLU
 ipv4 address 66.3.2.2 255.255.255.0
 tunnel source Loopback50
 tunnel destination 60.0.0.60
!
interface tunnel-ip5566
 description GRE virtual link for Area 100 RED
 ipv4 address 100.3.2.2 255.255.255.0
 tunnel source Loopback55
 tunnel destination 66.66.66.66

router ospf 100
 router-id 2.2.2.2
 segment-routing mpls
 segment-routing forwarding mpls
 fast-reroute per-prefix
 fast-reroute per-prefix ti-lfa enable
 segment-routing sr-prefer
 area 0
  interface Loopback0
   prefix-sid index 2
  !
  interface Loopback55
   passive enable
  !
  interface tunnel-ip5060
   cost 1000
 !
  interface TenGigE0/0/1/10
   network point-to-point
  !
 !
 area 100
  interface Loopback50
   passive enable
  !
  interface tunnel-ip5566
   cost 1000
  !
  interface TenGigE0/0/1/11
    network point-to-point
```

**Note** In the above configuration, GRE tunnel-ip5060 belongs to area 0, but its source and destination addresses are advertised in area 100. This ensures disjointness between the GRE tunnel and the links in area 0 that it protects. The same applies to GRE tunnel-ip5566 which belongs to area 100 and its source and destination addresses are advertised in area 0.

A high cost is applied to the GRE tunnel interfaces so that they are used only as a backup path.

### Configuration on ABR 3

```
interface Loopback0
 ipv4 address 3.3.3.3 255.255.255.255
!
interface Loopback60
 description Lo for GRE BLU
```

```
 ipv4 address 60.0.0.60 255.255.255.0
!
interface Loopback66
 description Lo for GRE RED
 ipv4 address 66.66.66.66 255.255.255.255
!
interface tunnel-ip5060
 description GRE virtual link for Area 0 BLU
 ipv4 address 66.3.2.3 255.255.255.0
 tunnel source Loopback60
 tunnel destination 50.0.0.50
!
interface tunnel-ip5566
 description GRE virtual link for Area 100 RED
 ipv4 address 100.3.2.3 255.255.255.0
 tunnel source Loopback66
 tunnel destination 55.55.55.55

router ospf 100
 router-id 3.3.3.3
 segment-routing mpls
 segment-routing forwarding mpls
 fast-reroute per-prefix
 fast-reroute per-prefix ti-lfa enable
 segment-routing sr-prefer
 area 0
   interface Loopback0
   prefix-sid index 3
  !
  interface TenGigE0/0/0/9
  network point-to-point
  !
  interface Loopback66
   passive enable
  !
  interface tunnel-ip5060
   cost 1000
 !
 area 100
  interface TenGigE0/0/0/3
  network point-to-point
 !
  interface Loopback60
   passive enable
  !
  interface tunnel-ip5566
   cost 1000
```

**Note** In the above configuration, GRE tunnel-ip5060 belongs to area 0, but its source and destination addresses are advertised in area 100. This ensures disjointness between the GRE tunnel and the links in area 0 that it protects. The same applies to GRE tunnel-ip5566 which belongs to area 100 and its source and destination addresses are advertised in area 0.

A high cost is applied to the GRE tunnel interfaces so that they are used only as a backup path.

### TI-LFA Fast Reroute Coverage on Node 5 After GRE Tunnel Configuration

The following output shows that this configuration provides 100% TI-LFA fast reroute coverage on Node 5:

```
RP/0/RSP0/CPU0:Node5# show ip ospf fast-reroute prefix-summary
Load for five secs: 5%/1%; one minute: 4%; five minutes: 4%
Time source is NTP, 11:20:31.743 UTC Fri Jul 19 2019
            OSPF Router with ID (5.5.5.5) (Process ID 100)
                    Base Topology (MTID 0)
Area 100:
Interface        Protected    Primary paths    Protected paths Percent protected
                            All  High   Low   All  High   Low    All High  Low
Lo0                    Yes    0     0     0     0     0     0     0%   0%   0%
Te0/0/27               Yes    9     6     3     9     6     3   100% 100% 100%
Te0/0/26               Yes   11     6     5    11     6     5   100% 100% 100%

Area total:                 20    12     8    20    12     8   100% 100% 100%

Process total:              20    12     8    20    12     8   100% 100% 100%
```

### Traffic Flow with GRE Tunnel as TI-LFA Backup

With a link failure between Node 1 and ABR 2, traffic flowing from Node 1 to Node 5 is simply routed through Nodes 4-3-6 to Node 5.

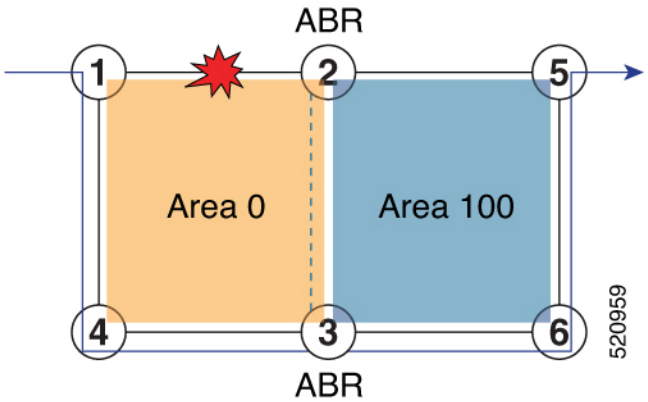


With GRE tunnel as TI-LFA backup, traffic flowing from Node 5 to Node 1 will be encapsulated at ABR2 and routing over the GRE tunnel.

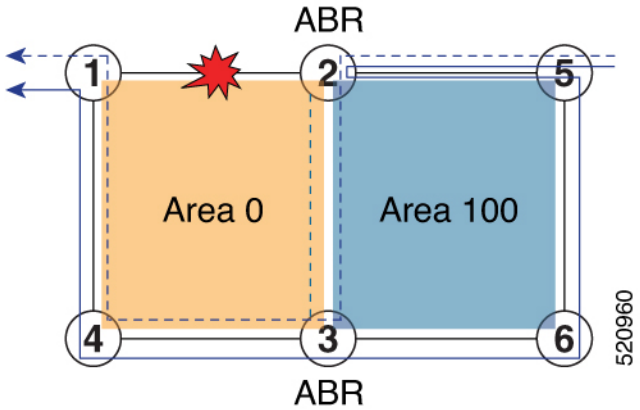


With a link failure between Node 5 and ABR 2, traffic flowing from Node 5 to Node 1 is simply routed through Nodes 6-3-4 to Node 1.

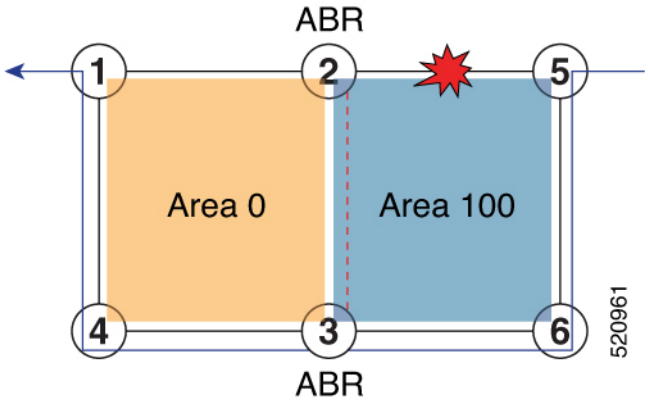


With GRE tunnel as TI-LFA backup, traffic flowing from Node 1 to Node 5 will be encapsulated at ABR2 and routing over the GRE tunnel.

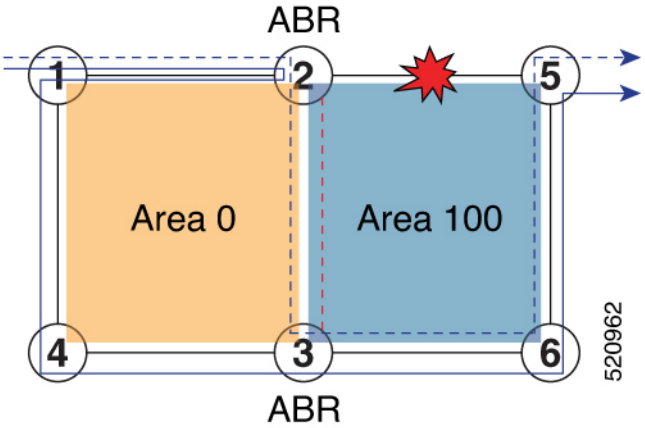


# Unlabeled IPv6 Traffic Protection

*Table 76: Feature History Table*

| Feature Name | Release Information | Feature Description |
|---|---|---|
| IPv6 Unlabeled Traffic protection with TI-LFA | Release 7.3.1 | TI-LFA provides protection for SR-labeled traffic (IPv4 and IPv6 prefixes associated with a prefix SID) and for other unlabeled IPv4 prefixes.<br>This feature introduces support for protecting unlabeled IPv6 prefixes. |

This feature introduces support for protecting unlabeled IPv6 prefixes. IS-IS can calculate and install TI-LFA backup paths for unlabeled IPv6 prefixes.

By default, all IPv6 prefixes without a prefix SID are eligible to have a dynamic local label assigned to them. This behavior provides the greatest degree of protection, but in some deployments, it may consume too many MPLS labels. This feature provides the ability to disable local label allocation or to restrict local label allocation to a subset of prefixes based on a prefix list or route policy.

Use the following commands in IS-IS IPv6 address family configuration mode to specify the local label allocation behavior:

- **segment-routing mpls unlabeled protection disable**—Disable local label allocation.
- **segment-routing mpls unlabeled protection prefix-list** *sample_prefix_list*—Restricts local label allocation to the prefixes based on a prefix list.
- **segment-routing mpls unlabeled protection route-policy** *sample_rpl*—Restricts local label allocation to the prefixes based a route policy.

### Configuration

The following example shows how to disable local label allocation:

```
Router(config)# router isis 1
Router(config-isis)# address-family ipv6 unicast
Router(config-isis-af)# segment-routing mpls unlabeled protection disable
Router(config-isis-af)#
```

The following example shows how to enable local label allocation for prefixes in a prefix list:

```
Router(config)# ipv6 prefix-list sample_prefix_list
Router(config-ipv6-pfx)# 10 permit 333::333:0:0/96 ge 112
Router(config-ipv6-pfx)# 20 permit 666::666:0:0/96 ge 112
Router(config-ipv6-pfx)# exit
Router(config)#

Router(config)# router isis 1
Router(config-isis)# address-family ipv6 unicast
Router(config-isis-af)# segment-routing mpls unlabeled protection prefix-list
sample_prefix_list
Router(config-isis-af)# commit
```

The following example shows how to enable local label allocation for prefixes in a route policy:

```
Router(config)# prefix-set sample_prefix_set
Router(config-pfx)# 333::333:1:0/112
Router(config-pfx)# end-set
Router(config)# route-policy sample_rpl
Router(config-rpl)# if destination in sample_prefix_set then
Router(config-rpl-if)# pass
Router(config-rpl-if)# else drop endif
Router(config-rpl)# end-policy
Router(config)#

Router(config)# router isis 1
Router(config-isis)# address-family ipv6 unicast
Router(config-isis-af)# segment-routing mpls unlabeled protection route-policy sample_rpl
Router(config-isis-af)# commit
```

### Verification

In the following **show** command output, 24103 is the local label used to program the prefix with a TI-LFA backup.

```
Router# show isis ipv6 unicast route 333::333:1:0/112 detail
L2 333::333:1:0/112 [120/115] Label: 24103, low priority
     via fe80::28a:96ff:fef4:5403, TenGigE0/1/0/3/5, r6, SRGB Base: 16000, Weight: 0
     src R1.00-01, 1:1:1::1

Router# show isis ipv6 fast-reroute 333::333:1:0/112 detail
L2 333::333:1:0/112 [120/115] Label: 24103, low priority
     via fe80::28a:96ff:fef4:5403, TenGigE0/1/0/3/5, R6, SRGB Base: 16000, Weight: 0
       Backup path: TI-LFA (link), via fe80::2c1:64ff:fe60:39b9, TenGigE0/1/0/3/0 R4, SRGB
 Base: 16000, Weight: 0, Metric: 140
         P node: R3.00 [3:3:3::3], Label: 16333
         Prefix label: None
         Backup-src: R1.00
       P: No, TM: 140, LC: No, NP: No, D: No, SRLG: Yes
     src R1.00-a9, 1:1:1::1

Router# show route ipv6 333::333:1:0/112 detail
Routing entry for 333::333:1:0/112
  Known via "isis 1", distance 115, metric 120, type level-2
  Installed Jul 26 19:11:58.840 for 00:00:47
  Routing Descriptor Blocks
    fe80::2c1:64ff:fe60:39b9, from 1:1:1::1, via TenGigE0/1/0/3/0, Backup (TI-LFA)
      Repair Node(s): 3:3:3::3
      Route metric is 140
      Label: 0x3fcd (16333)
      Tunnel ID: None
      Binding Label: None
      Extended communities count: 0
      Path id:65              Path ref count:1
      NHID:0x20008(Ref:20026)
    fe80::28a:96ff:fef4:5403, from 1:1:1::1, via TenGigE0/1/0/3/5, Protected
      Route metric is 120
      Label: None
      Tunnel ID: None
      Binding Label: None
      Extended communities count: 0
      Path id:1       Path ref count:0
      NHID:0x20009(Ref:20021)
      Backup path id:65
  Route version is 0x1e (30)
  Local Label: 0x5e27 (24103)
  IP Precedence: Not Set
  QoS Group ID: Not Set
  Flow-tag: Not Set
  Fwd-class: Not Set
  Route Priority: RIB_PRIORITY_NON_RECURSIVE_LOW (8) SVD Type RIB_SVD_TYPE_LOCAL
  Download Priority 2, Download Version 4200135
  No advertising protos.

Router# show mpls forwarding labels 24103
Local  Outgoing    Prefix             Outgoing     Next Hop        Bytes
Label  Label       or ID              Interface                    Switched
------ ----------- ------------------ ------------ --------------- ------------
24103  Unlabelled  333::333:1:0/112   Te0/1/0/3/5  fe80::28a:96ff:fef4:5403   \
                                                                   0
       16333       333::333:1:0/112   Te0/1/0/3/0  fe80::2c1:64ff:fe60:39b9   \
                                                                   0            (!)
```

CHAPTER 17

# Configure Segment Routing Microloop Avoidance

The Segment Routing Microloop Avoidance feature enables link-state routing protocols, such as IS-IS, to prevent or avoid microloops during network convergence after a topology change.


- About Segment Routing Microloop Avoidance, on page 577
- Usage Guidelines and Limitations, on page 579
- Configure Segment Routing Microloop Avoidance for IS-IS, on page 579
- Configure Segment Routing Microloop Avoidance for OSPF, on page 581


## About Segment Routing Microloop Avoidance

IP hop-by-hop routing may induce microloops (uLoops) at any topology transition. Microloops are a day-one IP challenge. Microloops are brief packet loops that occur in the network following a topology change:

- Link down or up (remote or local)
- Metric increase or decrease (remote or local)

Microloops are caused by the non-simultaneous convergence of different nodes in the network. If a node converges and sends traffic to a neighbor node that has not converged yet, traffic may be looped between these two nodes, resulting in packet loss, jitter, and out-of-order packets.

Segment Routing can be used to resolve the microloop problem. A router with the Segment Routing Microloop Avoidance feature detects if microloops are possible for a destination on the post-convergence path following a topology change associated with a remote link event.

If a node determines that a microloop could occur on the new topology, the IGP computes a microloop-avoidant path by updating the forwarding table and temporarily (based on a RIB update delay timer) installing the SID-list imposition entries associated with the microloop-avoidant path for the destination. Traffic is steered to that destination loop-free.

After the RIB update delay timer expires, IGP updates the forwarding table and removes the microloop-avoidant SID list. Traffic now natively follows the post-convergence path.

SR microloop avoidance is a local behavior and therefore not all nodes need to implement it to get the benefits.

In the topology below, microloops can occur after the failure of the link between Node6 and Node7.

At steady state, Node1 sends traffic to node 6 (16006) via Node7. Node 7 is configured with TI-LFA to protect traffic to Node6.

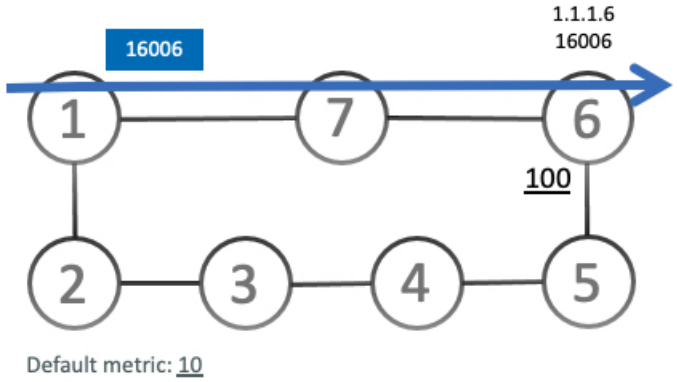


TI-LFA on Node7 pre-computes a backup path for traffic to Node6 (prefix SID 16006) that will be activated if the link between Node7 and Node6 goes down. In this network, the backup path would steer traffic toward Node5 (prefix SID 16005) and then via link between Node5 and Node6 (adj-SID 24056). All nodes are notified of the topology change due to the link failure.

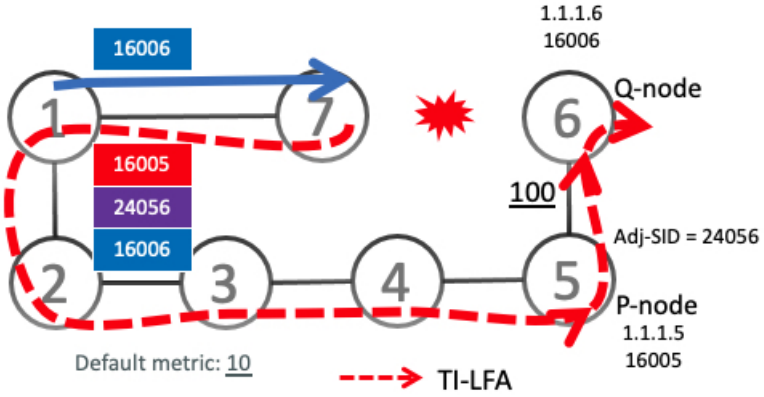


However, if nodes along the path do not converge at the same time, microloops can be introduced. For example, if Node2 converged before Node3, Node3 would send traffic back to Node2 as the shortest IGP path to Node6. The traffic between Node2 and Node3 creates a microloop.

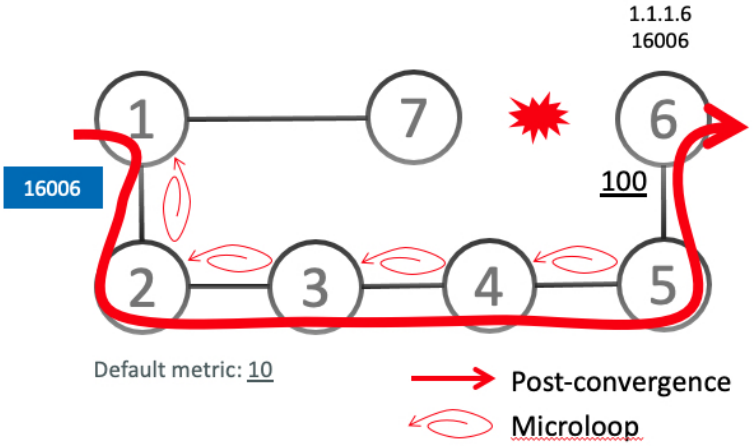

With microloop avoidance configured on Node1, a post-convergence path is computed and possible microloops on the post-convergence path for any destination are detected.

If microloops are possible on the post-convergence path to Node6, a microloop-avoidant path is constructed to steer the traffic to Node6 loop-free over the microloop-avoidant path {16005, 24056, 16006}.

Node1 updates the forwarding table and installs the SID-list imposition entries for those destinations with possible microloops, such as Node6. All nodes converge and update their forwarding tables, using SID lists where needed.

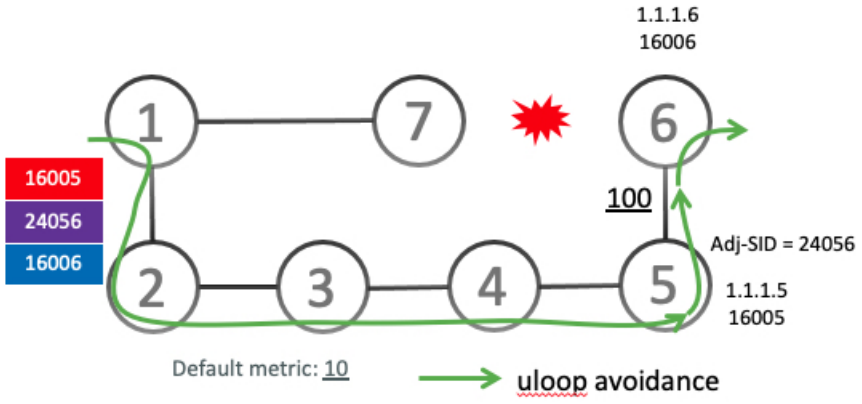


After the RIB update delay timer expires, the microloop-avoidant path is replaced with regular forwarding paths; traffic now natively follows the post-convergence path.

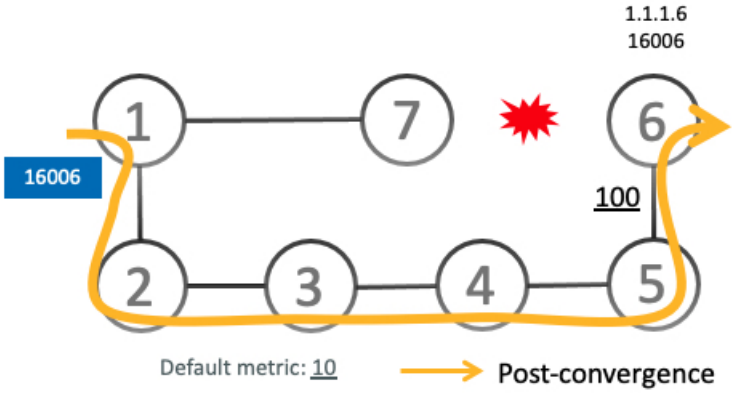


# Usage Guidelines and Limitations

IGP automatically instantiates an SR-TE policy to program a microloop-avoidant path with up to 10 labels, including the label of the destination prefix.

# Configure Segment Routing Microloop Avoidance for IS-IS

This task describes how to enable Segment Routing Microloop Avoidance and set the Routing Information Base (RIB) update delay value for IS-IS.

### Before you begin

Ensure that the following topology requirements are met:

- Routers are configured with IS-IS.
- Segment routing for IS-IS is configured. See Enabling Segment Routing for IS-IS Protocol, on page 213.
- Enter the **ipv4 unnumbered mpls traffic-eng Loopback** *interface* command in global configuration mode to specify the default source address of the automatic SR-TE Policy used to program a microloop avoidant path. The range for the loopback *interface* is from 0 to 2147483647.

```
Router(config)# ipv4 unnumbered mpls traffic-eng Loopback0
```

### Procedure

| | Command or Action | Purpose |
|---|---|---|
| **Step 1** | **configure**<br>**Example:**<br>`RP/0/RSP0/CPU0:router# configure` | Enters global configuration mode. |
| **Step 2** | **router isis** *instance-id*<br>**Example:**<br>`RP/0/RSP0/CPU0:router(config)# router isis 1` | Enables IS-IS routing for the specified routing instance, and places the router in router configuration mode.<br>You can change the level of routing to be performed by a particular routing instance by using the **is-type** router configuration command. |
| **Step 3** | **address-family ipv4** [ **unicast** ]<br>**Example:**<br>`RP/0/RSP0/CPU0:router(config-isis)# address-family ipv4 unicast` | Specifies the IPv4 address family and enters router address family configuration mode. |
| **Step 4** | **microloop avoidance segment-routing**<br>**Example:**<br>`RP/0/RSP0/CPU0:router(config-isis-af)# microloop avoidance segment-routing` | Enables Segment Routing Microloop Avoidance. |
| **Step 5** | **microloop avoidance rib-update-delay** *delay-time*<br>**Example:**<br>`RP/0/RSP0/CPU0:router(config-isis-af)# microloop avoidance rib-update-delay 3000` | Specifies the amount of time the node uses the microloop avoidance policy before updating its forwarding table. The *delay-time* is in milliseconds. The range is from 1-60000. The default value is 5000. |

# Configure Segment Routing Microloop Avoidance for OSPF

This task describes how to enable Segment Routing Microloop Avoidance and set the Routing Information Base (RIB) update delay value for OSPF.

### Before you begin

Ensure that the following topology requirements are met:

- Routers are configured with OSPF.
- Segment routing for OSPF is configured. See Enabling Segment Routing for OSPF Protocol, on page 237.
- Enter the **ipv4 unnumbered mpls traffic-eng Loopback** *interface* command in global configuration mode to specify the default source address of the automatic SR-TE Policy used to program a microloop avoidant path. The range for the loopback *interface* is from 0 to 2147483647.

  ```
  Router(config)# ipv4 unnumbered mpls traffic-eng Loopback0
  ```

### Procedure

| | Command or Action | Purpose |
|---|---|---|
| **Step 1** | **configure**<br>**Example:**<br>`RP/0/RSP0/CPU0:router# configure` | Enters global configuration mode. |
| **Step 2** | **router ospf** *process-name*<br>**Example:**<br>`RP/0/RSP0/CPU0:router(config)# router ospf 1` | Enables OSPF routing for the specified routing process, and places the router in router configuration mode. |
| **Step 3** | **microloop avoidance segment-routing**<br>**Example:**<br>`RP/0/RSP0/CPU0:router(config-ospf)# microloop avoidance segment-routing` | Enables Segment Routing Microloop Avoidance. |
| **Step 4** | **microloop avoidance rib-update-delay** *delay-time*<br>**Example:**<br>`RP/0/RSP0/CPU0:router(config-ospf)# microloop avoidance rib-update-delay 3000` | Specifies the amount of time the node uses the microloop avoidance path before updating its forwarding table. The *delay-time* is in milliseconds. The range is from 1-60000. The default value is 5000. |

CHAPTER 18

# Configure Segment Routing Mapping Server

The mapping server is a key component of the interworking between LDP and segment routing. It enables SR-capable nodes to interwork with LDP nodes. The mapping server advertises Prefix-to-SID mappings in IGP on behalf of other non-SR-capable nodes.


- Segment Routing Mapping Server, on page 583
- Segment Routing and LDP Interoperability, on page 585
- Configuring Mapping Server, on page 588
- Enable Mapping Advertisement, on page 590
- Enable Mapping Client, on page 592


## Segment Routing Mapping Server

The mapping server functionality in Cisco IOS XR segment routing centrally assigns prefix-SIDs for some or all of the known prefixes. A router must be able to act as a mapping server, a mapping client, or both.

- A router that acts as a mapping server allows the user to configure SID mapping entries to specify the prefix-SIDs for some or all prefixes. This creates the local SID-mapping policy. The local SID-mapping policy contains non-overlapping SID-mapping entries. The mapping server advertises the local SID-mapping policy to the mapping clients.
- A router that acts as a mapping client receives and parses remotely received SIDs from the mapping server to create remote SID-mapping entries.
- A router that acts as a mapping server and mapping client uses the remotely learnt and locally configured mapping entries to construct the non-overlapping consistent active mapping policy. IGP instance uses the active mapping policy to calculate the prefix-SIDs of some or all prefixes.

The mapping server automatically manages the insertions and deletions of mapping entries to always yield an active mapping policy that contains non-overlapping consistent SID-mapping entries.

- Locally configured mapping entries must not overlap each other.
- The mapping server takes the locally configured mapping policy, as well as remotely learned mapping entries from a particular IGP instance, as input, and selects a single mapping entry among overlapping mapping entries according to the preference rules for that IGP instance. The result is an active mapping policy that consists of non-overlapping consistent mapping entries.
- At steady state, all routers, at least in the same area or level, must have identical active mapping policies.

# Usage Guidelines and Restrictions

*Table 77: Feature History Table*

| Feature Name | Release Information | Feature Description |
|---|---|---|
| Advertisement of SID-Mapping Entries Between IS-IS Levels | Release 7.3.1 | The Segment Routing Mapping Server (SRMS) is a key component of the interworking between LDP and segment routing, enabling SR-capable nodes to interwork with LDP nodes.<br><br>This release introduces support for SRMS SID-mapping entries to be advertised between IS-IS levels (for example, from Level 1 to Level 2-only and from Level 2 to Level 1), where previously, the mappings were advertised only within the same IS-IS level, but not between IS-IS levels. This feature simplifies and centralizes the deployment of SRMS by removing the requirement of having a mapping server for each IS-IS area. |

- The position of the mapping server in the network is not important. However, since the mapping advertisements are distributed in IGP using the regular IGP advertisement mechanism, the mapping server needs an IGP adjacency to the network.
- The role of the mapping server is crucial. For redundancy purposes, you should configure multiple mapping servers in the networks.
- The mapping server functionality supports the advertisement of SID-mapping entries between IS-IS levels (for example, from L1 to L2-only and from L2 to L1). A mapping server is not required for each IS-IS area.

  For example, mapping entries learned from IS-IS Type Level-1 (intra-area) routers can be used to calculate prefix-SIDs for prefixes learned or advertised by IS-IS Type Level-2-only (backbone) routers.

  Use the **domain-wide** option to advertise the prefix-SID mappings between Level 1 and Level 2 IS-IS routers.
- The mapping server functionality does not support a scenario where SID-mapping entries learned through one IS-IS instance are used by another IS-IS instance to determine the prefix-SID of a prefix. For example, mapping entries learnt from remote routers by 'router isis 1' cannot be used to calculate prefix-SIDs for prefixes learnt, advertised, or downloaded to FIB by 'router isis 2'. A mapping server is required for each IS-IS instance.
- Segment Routing Mapping Server does not support Virtual Routing and Forwarding (VRF) currently.

# Segment Routing and LDP Interoperability

IGP provides mechanisms through which segment routing (SR) interoperate with label distribution protocol (LDP). The control plane of segment routing co-exists with LDP.

The Segment Routing Mapping Server (SRMS) functionality in SR is used to advertise SIDs for destinations, in the LDP part of the network, that do not support SR. SRMS maintains and advertises segment identifier (SID) mapping entries for such destinations. IGP propagates the SRMS mapping entries and interacts with SRMS to determine the SID value when programming the forwarding plane. IGP installs prefixes and corresponding labels, into routing information base (RIB), that are used to program the forwarding information base (FIB).

## Example: Segment Routing LDP Interoperability

Consider a network with a mix of segment routing (SR) and label distribution protocol (LDP). A continuous multiprotocol label switching (MPLS) LSP (Labeled Switched Path) can be established by facilitating interoperability. One or more nodes in the SR domain act as segment routing mapping server (SRMS). SRMS advertises SID mappings on behalf of non-SR capable nodes. Each SR-capable node learns about SID assigned to non-SR capable nodes without explicitly configuring individual nodes.

Consider a network as shown in the following figure. This network is a mix of both LDP and SR-capable nodes.

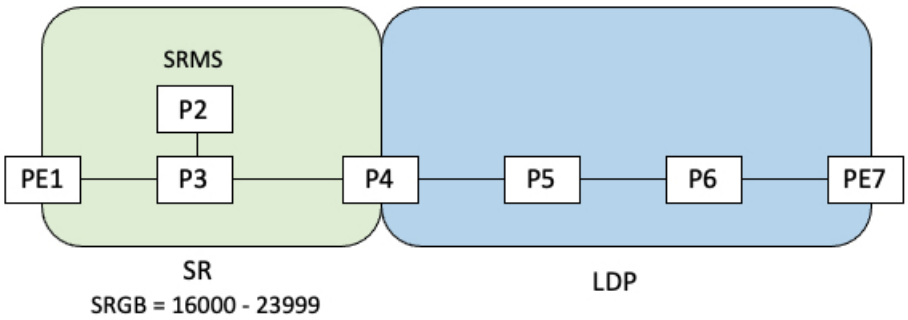


In this mixed network:

- Nodes PE1, P2, P3, and P4 are SR-capable
- Nodes P4, P5, P6, and PE7 are LDP-capable
- Nodes PE1, P2, P3, and P4 are configured with segment routing global block (SRGB) range of 16000 to 23999
- Nodes PE1, P2, P3, and P4 are configured with node segments of 16001, 16002, 16003, and 16004 respectively

A service flow must be established from PE1 to PE3 over a continuous MPLS tunnel. This requires SR and LDP to interoperate.

### LDP-to-SR Traffic Direction

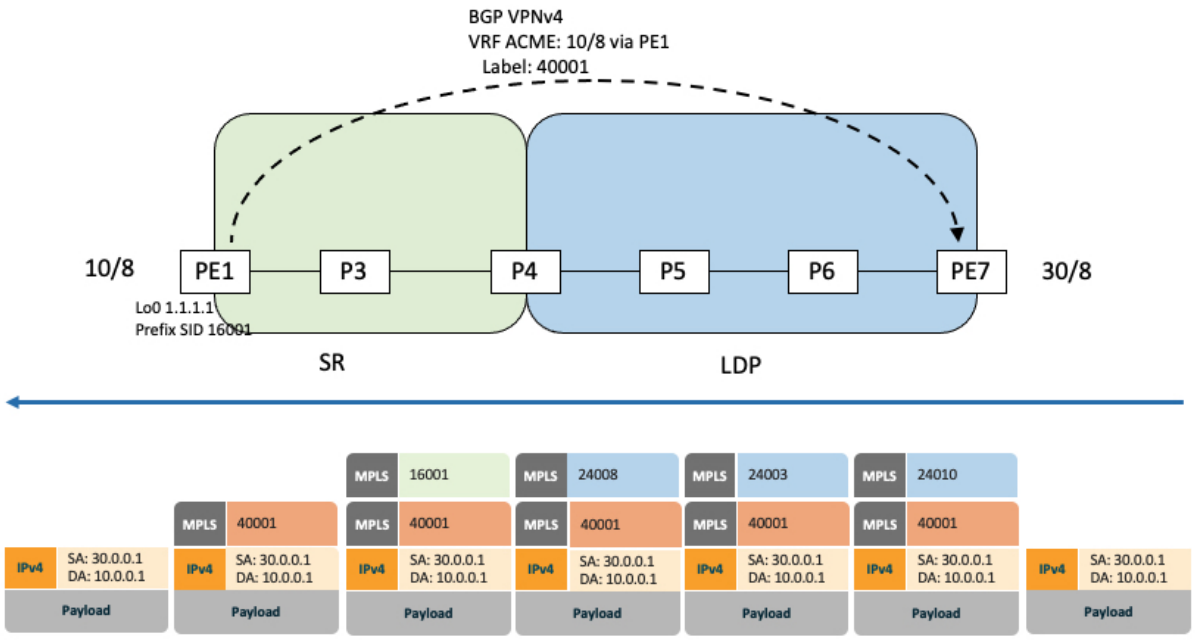


The traffic flow in the LDP-to-SR direction involves the following:

1. PE7 learns a service route with service label 40001 and BGP nhop PE1.
2. PE7 has an LDP label binding (24010) from the nhop P6 for the FEC PE1. PE7 forwards the packet to P6.
3. P6 has an LDP label binding (24003) from its nhop P5 for the FEC PE1. P6 forwards the packet to P5.
4. P5 has an LDP label binding (24008) from its nhop P4 for the FEC PE1. P5 forwards the packet to P4.
5. P4 does not have an LDP binding from its nhop P3 for the FEC PE1. But P4 has an SR node segment to the IGP route PE1. P4 forwards the packet to P3 and swaps its local LDP label (24008) for FEC PE1 by the equivalent node segment 16001. This process is called label merging.
6. P3 pops 16001, assuming PE1 has advertised its node segment 16001 with the penultimate-pop flag set and forwards to PE1.
7. PE1 receives the packet and processes the service label.

The end-to-end MPLS LSP is established from an LDP LSP from PE7 to P4 and the related node segment from P4 to PE1.

### SR-to-LDP Traffic Direction

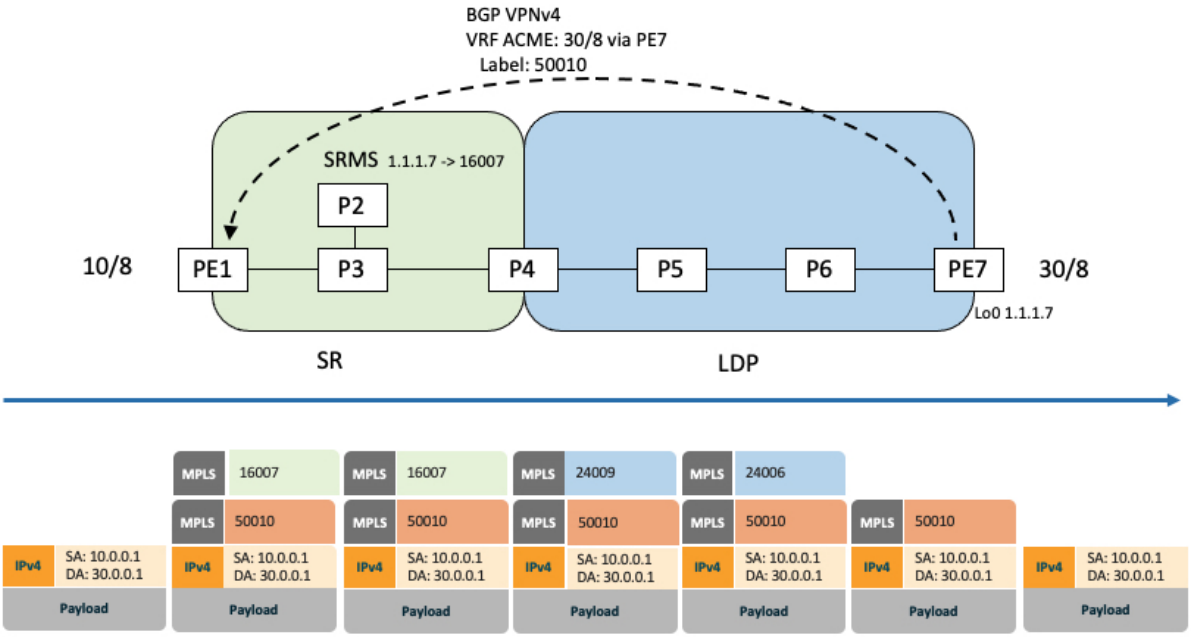


Suppose that the operator configures P2 as a Segment Routing Mapping Server (SRMS) and advertises the mappings (1.1.1.7, 16007 for PE7). Because PE7 is non-SR capable, the operator configures that mapping policy at the SRMS; the SRMS advertises the mapping on behalf of the non-SR capable nodes. Multiple SRMS servers can be provisioned in a network for redundancy. The mapping server advertisements are only understood by the SR-capable nodes. The SR-capable routers install the related node segments in the MPLS data plane in exactly the same manner as if node segments were advertised by the nodes themselves.

The traffic flow in the SR to LDP direction involves the following:

1. PE1 learns a service route with service label 50010 and BGP nhop PE7.
2. PE1 has an SR label binding (16007) learned from the SRMS (P2) for PE7.
3. PE1 installs the node segment 16007 following the IGP shortest-path with nhop P3.
4. P3 swaps 16007 for 16007 and forwards to P4.
5. The nhop for P4 for the IGP route PE7 is non-SR capable, since P5 does not advertise the SR capability. However, P4 has an LDP label binding from that nhop for the same FEC (for example, LDP label 24009). P4 would then swap 16007 for 24009 and forward to P5. We refer to this process as label merging.
6. P5 swaps this label with the LDP label received from P6 (for example, LDP label 24006) and forwards to P6.
7. P6 pops the LDP label and forwards to PE7.
8. PE7 receives the packet and processes the service label.

The end-to-end MPLS LSP is established from an SR node segment from PE1 to P4 and an LDP LSP from P4 to PE7.

Observe that the capabilities provided by the SRMS are only required in the SR-to-LDP direction.

# Configuring Mapping Server

Perform these tasks to configure the mapping server and to add prefix-SID mapping entries in the active local mapping policy.

## SUMMARY STEPS

1. **configure**
2. **segment-routing**
3. **mapping-server**
4. **prefix-sid-map**
5. **address-family ipv4** | **ipv6**
6. *ip-address/prefix-length* *first-SID-value* **range** *range*
7. Use the **commit** or **end** command.

## DETAILED STEPS

| | Command or Action | Purpose |
|---|---|---|
| **Step 1** | **configure**<br>**Example:**<br>`RP/0/RSP0/CPU0:router# configure` | Enters global configuration mode. |
| **Step 2** | **segment-routing**<br>**Example:**<br>`RP/0/RSP0/CPU0:router(config)# segment-routing` | Enables segment routing. |
| **Step 3** | **mapping-server**<br>**Example:**<br>`RP/0/RSP0/CPU0:router(config-sr)# mapping-server` | Enables mapping server configuration mode. |
| **Step 4** | **prefix-sid-map**<br>**Example:**<br>`RP/0/RSP0/CPU0:router(config-sr-ms)# prefix-sid-map` | Enables prefix-SID mapping configuration mode.<br>**Note** Two-way prefix SID can be enabled directly under IS-IS or through a mapping server. |
| **Step 5** | **address-family ipv4** \| **ipv6**<br>**Example:**<br>This example shows the address-family for ipv4:<br>`RP/0/RSP0/CPU0:router(config-sr-ms-map)# address-family ipv4` | Configures address-family for IS-IS. |

| | Command or Action | Purpose |
|---|---|---|
| | This example shows the address-family for ipv6:<br><br>`RP/0/RSP0/CPU0:router(config-sr-ms-map)#` **`address-family ipv6`** | |
| **Step 6** | *ip-address/prefix-length first-SID-value* **range** *range*<br><br>**Example:**<br><br>`RP/0/RSP0/CPU0:router(config-sr-ms-map-af)#` **`10.1.1.1/32 10 range 200`**<br>`RP/0/RSP0/CPU0:router(config-sr-ms-map-af)#` **`20.1.0.0/16 400 range 300`** | Adds SID-mapping entries in the active local mapping policy. In the configured example:<br>• Prefix 10.1.1.1/32 is assigned prefix-SID 10, prefix 10.1.1.2/32 is assigned prefix-SID 11,…, prefix 10.1.1.199/32 is assigned prefix-SID 200<br>• Prefix 20.1.0.0/16 is assigned prefix-SID 400, prefix 20.2.0.0/16 is assigned prefix-SID 401,…, and so on. |
| **Step 7** | Use the **commit** or **end** command. | **commit** —Saves the configuration changes and remains within the configuration session.<br>**end** —Prompts user to take one of these actions:<br>• **Yes** — Saves configuration changes and exits the configuration session.<br>• **No** —Exits the configuration session without committing the configuration changes.<br>• **Cancel** —Remains in the configuration session, without committing the configuration changes. |

Verify information about the locally configured prefix-to-SID mappings.

**Note** Specify the address family for IS-IS.

```
RP/0/RSP0/CPU0:router# show segment-routing mapping-server prefix-sid-map ipv4
Prefix               SID Index    Range        Flags
20.1.1.0/24          400          300
10.1.1.1/32          10           200

Number of mapping entries: 2

RP/0/RSP0/CPU0:router# show segment-routing mapping-server prefix-sid-map ipv4 detail
Prefix
20.1.1.0/24
    SID Index:      400
    Range:          300
    Last Prefix:    20.2.44.0/24
    Last SID Index: 699
    Flags:
10.1.1.1/32
    SID Index:      10
    Range:          200
    Last Prefix:    10.1.1.200/32
    Last SID Index: 209
```

```
    Flags:

Number of mapping entries: 2
```

### What to do next

Enable the advertisement of the local SID-mapping policy in the IGP.

# Enable Mapping Advertisement

In addition to configuring the static mapping policy, you must enable the advertisement of the mappings in the IGP.

Perform these steps to enable the IGP to advertise the locally configured prefix-SID mapping.

## Configure Mapping Advertisement for IS-IS

### SUMMARY STEPS

1. **router isis** *instance-id*
2. **address-family** { **ipv4** | **ipv6** } [ **unicast** ]
3. **segment-routing prefix-sid-map advertise-local** [**domain-wide**]
4. Use the **commit** or **end** command.

### DETAILED STEPS

| | Command or Action | Purpose |
|---|---|---|
| **Step 1** | **router isis** *instance-id*<br>**Example:**<br>`RP/0/RSP0/CPU0:router(config)# router isis 1` | Enables IS-IS routing for the specified routing instance, and places the router in router configuration mode.<br>• You can change the level of routing to be performed by a particular routing instance by using the **is-type** router configuration command. |
| **Step 2** | **address-family** { **ipv4** | **ipv6** } [ **unicast** ]<br>**Example:**<br>The following is an example for ipv4 address family:<br>`RP/0/RSP0/CPU0:router(config-isis)# address-family ipv4 unicast` | Specifies the IPv4 or IPv6 address family, and enters router address family configuration mode. |
| **Step 3** | **segment-routing prefix-sid-map advertise-local** [**domain-wide**]<br>**Example:**<br>`RP/0/RSP0/CPU0:router(config-isis-af)# segment-routing prefix-sid-map advertise-local` | Configures IS-IS to advertise locally configured prefix-SID mappings. Use the **domain-wide** option to advertise the prefix-SID mappings between IS-IS Level 1 and Level 2 routers. |

| | Command or Action | Purpose |
|---|---|---|
| | `RP/0/RSP0/CPU0:router(config-isis-af)# segment-routing prefix-sid-map advertise-local domain-wide` | |
| **Step 4** | Use the **commit** or **end** command. | **commit** —Saves the configuration changes and remains within the configuration session.<br>**end** —Prompts user to take one of these actions:<br>• **Yes** — Saves configuration changes and exits the configuration session.<br>• **No** —Exits the configuration session without committing the configuration changes.<br>• **Cancel** —Remains in the configuration session, without committing the configuration changes. |

Verify IS-IS prefix-SID mapping advertisement and TLV.

```
RP/0/RSP0/CPU0:router# show isis database verbose

<...removed...>

 SID Binding:  10.1.1.1/32 F:0 M:0 S:0 D:0 A:0 Weight:0 Range:200
    SID: Start:10, Algorithm:0, R:0 N:0 P:0 E:0 V:0 L:0
 SID Binding:  20.1.1.0/24 F:0 M:0 S:0 D:0 A:0 Weight:0 Range:300
    SID: Start:400, Algorithm:0, R:0 N:0 P:0 E:0 V:0 L:0
```

# Configure Mapping Advertisement for OSPF

### SUMMARY STEPS

1. **router ospf** *process-name*
2. **segment-routing prefix-sid-map advertise-local**
3. Use the **commit** or **end** command.

### DETAILED STEPS

| | Command or Action | Purpose |
|---|---|---|
| **Step 1** | **router ospf** *process-name*<br>**Example:**<br>`RP/0/RSP0/CPU0:router(config)# router ospf 1` | Enables OSPF routing for the specified routing instance, and places the router in router configuration mode. |
| **Step 2** | **segment-routing prefix-sid-map advertise-local**<br>**Example:** | Configures OSPF to advertise locally configured prefix-SID mappings. |

| | Command or Action | Purpose |
|---|---|---|
| | `RP/0/RSP0/CPU0:router(config-ospf)# segment-routing prefix-sid-map advertise-local` | |
| **Step 3** | Use the **commit** or **end** command. | **commit** —Saves the configuration changes and remains within the configuration session.<br>**end** —Prompts user to take one of these actions:<br>• **Yes** — Saves configuration changes and exits the configuration session.<br>• **No** —Exits the configuration session without committing the configuration changes.<br>• **Cancel** —Remains in the configuration session, without committing the configuration changes. |

Verify OSP prefix-SID mapping advertisement and TLV.

```
RP/0/RSP0/CPU0:router# show ospf database opaque-area

<...removed...>

    Extended Prefix Range TLV: Length: 24
      AF        : 0
      Prefix    : 10.1.1.1/32
      Range Size: 200
      Flags     : 0x0

      SID sub-TLV: Length: 8
        Flags     : 0x60
        MTID      : 0
        Algo      : 0
        SID Index : 10
```

# Enable Mapping Client

By default, mapping client functionality is enabled.

You can disable the mapping client functionality by using the **segment-routing prefix-sid-map receive disable** command.

You can re-enable the mapping client functionality by using the **segment-routing prefix-sid-map receive** command.

The following example shows how to enable the mapping client for IS-IS:

```
RP/0/RSP0/CPU0:router(config)# router isis 1
RP/0/RSP0/CPU0:router(config-isis)# address-family ipv4 unicast
RP/0/RSP0/CPU0:router(config-isis-af)# segment-routing prefix-sid-map receive
```

The following example shows how to enable the mapping client for OSPF:

```
RP/0/RSP0/CPU0:router(config)# router ospf 1
RP/0/RSP0/CPU0:router(config-ospf)# segment-routing prefix-sid-map receive
```

CHAPTER 19

# Using Segment Routing Traffic Matrix

This module provides information about the Segment Routing Traffic Matrix (SR-TM) and the Traffic Collector process, and describes how to configure the TM border and the Traffic Collector and to display traffic information.


- Segment Routing Traffic Matrix, on page 595
- Traffic Collector Process, on page 595
- Configuring Traffic Collector, on page 596
- Displaying Traffic Information, on page 598


## Segment Routing Traffic Matrix

A network's traffic matrix is a description, measure, or estimation of the aggregated traffic flows that enter, traverse, and leave a network.

The Segment Routing Traffic Matrix (SR-TM) is designed to help users understand traffic patterns on a router. The Traffic Matrix border divides the network into two parts: internal (interfaces that are inside the border) and external (interfaces that are outside the border). By default, all interfaces are internal. You can configure an interface as external.

## Traffic Collector Process

The Traffic Collector collects packet and byte statistics from router components such as prefix counters, tunnel counters, and the TM counter. The TM counter increments when traffic that comes from an external interface to the network is destined for a segment routing prefix-SID. The Traffic Collector keeps histories of the statistics and makes them persistent across process restarts, failovers, and ISSU. Histories are retained for a configurable length of time.

### Pcounters

A Pcounter is a packet and byte pair of counters. There is one Pcounter per tunnel. There are two Pcounters per prefix-SID:

- Base Pcounter – any packet that is switched on the prefix-SID forwarding information base (FIB) entry
- TM Pcounter – any packet from an external interface and switched on the prefix-SID FIB entry

The Traffic Collector periodically collects the Base Pcounters and TM Pcounters of all prefix-SIDs, and the Pcounters of all tunnel interfaces.

For each Pcounter, the Traffic Collector calculates the number of packets and bytes that have been forwarded during the last interval. The Traffic Collector keeps a history of the per-interval statistics for each of the Pcounters. Each entry in the history contains:

- The start and end time of the interval
- The number of packets forwarded during the interval
- The number of bytes forwarded during the interval

### Feature Support and Limitations

- Pcounters for IPv4 SR Prefix SIDs are supported.
- Pcounters for IPv6 SR Prefix SIDs are not supported.
- TM Pcounters increment for incoming SR-labeled, LDP-labeled, and IP traffic destined for an SR Prefix SID.
- External interface support can be enabled on all Ethernet interfaces except Management, Bundle, and sub interfaces. Tunnels may not be set as external interfaces.
- Default VRF is supported. Non-default VRF is not supported.

# Configuring Traffic Collector

Perform these tasks to configure the traffic collector.

### SUMMARY STEPS

1. **configure**
2. **traffic-collector**
3. **statistics collection-interval** *value*
4. **statistics history-size** *value*
5. **statistics history-timeout** *value*
6. **interface** *type l3-interface-address*
7. Use the **commit** or **end** command.

### DETAILED STEPS

| | Command or Action | Purpose |
|---|---|---|
| **Step 1** | **configure**<br>**Example:**<br>`RP/0/RSP0/CPU0:router# configure` | Enters global configuration mode. |

| | Command or Action | Purpose |
|---|---|---|
| **Step 2** | **traffic-collector**<br>**Example:**<br>`RP/0/RP0/CPU0:router(config)# traffic-collector` | Enables traffic collector and places the router in traffic collector configuration mode. |
| **Step 3** | **statistics collection-interval** *value*<br>**Example:**<br>`RP/0/RP0/CPU0:router(config-tc)# statistics collection-interval 5` | (Optional) Sets the frequency that the traffic collector collects and posts data, in minutes. Valid values are 1, 2, 3, 4, 5, 6, 10, 12,15, 20, 30, and 60. The default interval is 1. |
| **Step 4** | **statistics history-size** *value*<br>**Example:**<br>`RP/0/RP0/CPU0:router(config-tc)# statistics history-size 10` | (Optional) Specifies the number of entries kept in the history database. Valid values are from 1 to 10. The default is 5.<br>**Note** The number of entries affects how the average packet and average byte rates are calculated. The rates are calculated over the range of the histories and are not averages based in real time. |
| **Step 5** | **statistics history-timeout** *value*<br>**Example:**<br>`RP/0/RP0/CPU0:router(config-tc)# statistics history-timeout 24` | (Optional) When a prefix SID or a tunnel-te interface is deleted, the history-timeout sets the length of time, in hours, that the prefix SID and tunnel statistics are retained in the history before they are removed. The minimum is one hour; the maximum is 720 hours. The default is 48.<br>**Note** Enter 0 to disable the history timeout. (No history is retained.) |
| **Step 6** | **interface** *type l3-interface-address*<br>**Example:**<br>`RP/0/RP0/CPU0:router(config-tc)# interface TenGigE 0/1/0/3` | Identifies interfaces that handle external traffic. Only L3 interfaces are supported for external traffic. |
| **Step 7** | Use the **commit** or **end** command. | **commit** —Saves the configuration changes and remains within the configuration session.<br>**end** —Prompts user to take one of these actions:<br>• **Yes** — Saves configuration changes and exits the configuration session.<br>• **No** —Exits the configuration session without committing the configuration changes.<br>• **Cancel** —Remains in the configuration session, without committing the configuration changes. |

This completes the configuration for the traffic collector.

# Displaying Traffic Information

The following show commands display information about the interfaces and tunnels:

**Note** For detailed information about the command syntax for the following **show** commands, see the *Segment Routing Command Reference Guide*.

- Display the configured external interfaces:

```
RP/0/RSP0/CPU0:router# show traffic-collector external-interface
  Interface             Status
  --------------------  ----------------
  Te0/1/0/3             Enabled
  Te0/1/0/4             Enabled
```

- Display the counter history database for a prefix-SID:

```
RP/0/RSP0/CPU0:router# show traffic-collector ipv4 counters prefix 10.1.1.10/32 detail
Prefix: 10.1.1.10/32  Label: 16010 State: Active
Base:
    Average over the last 5 collection intervals:
        Packet rate: 9496937 pps, Byte rate: 9363979882 Bps

    History of counters:
        23:01 - 23:02: Packets 9379529, Bytes: 9248215594
        23:00 - 23:01: Packets 9687124, Bytes: 9551504264
        22:59 - 23:00: Packets 9539200, Bytes: 9405651200
        22:58 - 22:59: Packets 9845278, Bytes: 9707444108
        22:57 - 22:58: Packets 9033554, Bytes: 8907084244
TM Counters:
    Average over the last 5 collection intervals:
        Packet rate: 9528754 pps, Byte rate: 9357236821 Bps

    History of counters:
        23:01 - 23:02: Packets 9400815, Bytes: 9231600330
        23:00 - 23:01: Packets 9699455, Bytes: 9524864810
        22:59 - 23:00: Packets 9579889, Bytes: 9407450998
        22:58 - 22:59: Packets 9911734, Bytes: 9733322788
        22:57 - 22:58: Packets 9051879, Bytes: 8888945178
```

This output shows the average Pcounter (packets, bytes), the Pcounter history, and the collection interval of the Base and TM for the specified prefix-SID.

- Display the counter history database for a policy:

```
RP/0/RSP0/CPU0:router# show traffic-collector counters tunnels srte_c_12_ep_6.6.6.2
detail
Tunnel: srte_c_12_ep_6.6.6.2  State: Active
    Average over the last 5 collection intervals:
        Packet rate: 9694434 pps, Byte rate: 9597489858 Bps
```

```
History of counters:
    23:14 - 23:15: Packets 9870522 , Bytes: 9771816780
    23:13 - 23:14: Packets 9553048 , Bytes: 9457517520
    23:12 - 23:13: Packets 9647265 , Bytes: 9550792350
    23:11 - 23:12: Packets 9756654 , Bytes: 9659087460
    23:10 - 23:11: Packets 9694434 , Bytes: 9548235180
```

This output shows the average Pcounter (packets, bytes), the Pcounter history, and the collection interval for the policy.

CHAPTER 20

# Using Segment Routing OAM

Segment Routing Operations, Administration, and Maintenance (OAM) helps service providers to monitor label-switched paths (LSPs) and quickly isolate forwarding problems to assist with fault detection and troubleshooting in the network. The Segment Routing OAM feature provides support for BGP prefix SIDs, IGP prefix and Flexible Algorithm SIDs, and Nil-FEC (forwarding equivalence classes) LSP Ping and Traceroute functionality.


- MPLS Ping and Traceroute for BGP and IGP Prefix-SID, on page 601
- Examples: MPLS Ping, Traceroute, and Tree Trace for Prefix-SID, on page 602
- MPLS LSP Ping and Traceroute Nil FEC Target, on page 604
- Examples: LSP Ping and Traceroute for Nil_FEC Target , on page 604
- Segment Routing Ping and Traceroute, on page 606
- Segment Routing Ping and Traceroute for Flexible Algorithm, on page 614
- Segment Routing Policy Nil-FEC Ping and Traceroute, on page 615
- Segment Routing over IPv6 OAM, on page 617
- Segment Routing Data Plane Monitoring , on page 618


## MPLS Ping and Traceroute for BGP and IGP Prefix-SID

MPLS Ping and Traceroute operations for Prefix SID are supported for various BGP and IGP scenarios, for example:

- Within an IS-IS level or OSPF area
- Across IS-IS levels or OSPF areas
- Route redistribution from IS-IS to OSPF and from OSPF to IS-IS
- Anycast Prefix SID
- Combinations of BGP and LDP signaled LSPs

The MPLS LSP Ping feature is used to check the connectivity between ingress Label Switch Routers (LSRs) and egress LSRs along an LSP. MPLS LSP ping uses MPLS echo request and reply messages, similar to Internet Control Message Protocol (ICMP) echo request and reply messages, to validate an LSP. The destination IP address of the MPLS echo request packet is different from the address used to select the label stack. The destination IP address is defined as a 127.x.y.z/8 address and it prevents the IP packet from being IP switched to its destination, if the LSP is broken.

The MPLS LSP Traceroute feature is used to isolate the failure point of an LSP. It is used for hop-by-hop fault localization and path tracing. The MPLS LSP Traceroute feature relies on the expiration of the Time to Live (TTL) value of the packet that carries the echo request. When the MPLS echo request message hits a transit node, it checks the TTL value and if it is expired, the packet is passed to the control plane, else the message is forwarded. If the echo message is passed to the control plane, a reply message is generated based on the contents of the request message.

The MPLS LSP Tree Trace (traceroute multipath) operation is also supported for BGP and IGP Prefix SID. MPLS LSP Tree Trace provides the means to discover all possible equal-cost multipath (ECMP) routing paths of an LSP to reach a destination Prefix SID. It uses multipath data encoded in echo request packets to query for the load-balancing information that may allow the originator to exercise each ECMP. When the packet TTL expires at the responding node, the node returns the list of downstream paths, as well as the multipath information that can lead the operator to exercise each path in the MPLS echo reply. This operation is performed repeatedly for each hop of each path with increasing TTL values until all ECMP are discovered and validated.

MPLS echo request packets carry Target FEC Stack sub-TLVs. The Target FEC sub-TLVs are used by the responder for FEC validation. The BGP and IGP IPv4 prefix sub-TLV has been added to the Target FEC Stack sub-TLV. The IGP IPv4 prefix sub-TLV contains the prefix SID, the prefix length, and the protocol (IS-IS or OSPF). The BGP IPv4 prefix sub-TLV contains the prefix SID and the prefix length.

# Examples: MPLS Ping, Traceroute, and Tree Trace for Prefix-SID

These examples use the following topology:

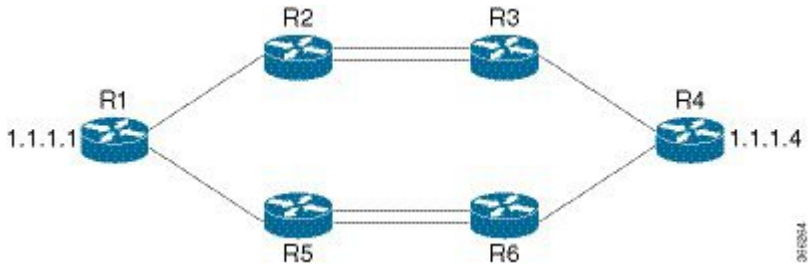


### MPLS Ping for Prefix-SID

```
RP/0/RSP0/CPU0:router-arizona# ping mpls ipv4 10.1.1.4/32
Thu Dec 17 01:01:42.301 PST

Sending 5, 100-byte MPLS Echos to 10.1.1.4,
      timeout is 2 seconds, send interval is 0 msec:

Codes: '!' - success, 'Q' - request not sent, '.' - timeout,
  'L' - labeled output interface, 'B' - unlabeled output interface,
  'D' - DS Map mismatch, 'F' - no FEC mapping, 'f' - FEC mismatch,
  'M' - malformed request, 'm' - unsupported tlvs, 'N' - no rx label,
  'P' - no rx intf label prot, 'p' - premature termination of LSP,
  'R' - transit router, 'I' - unknown upstream index,
  'X' - unknown return code, 'x' - return code 0

Type escape sequence to abort.

!!!!!
Success rate is 100 percent (5/5), round-trip min/avg/max = 2/2/3 ms
```

### MPLS Traceroute for Prefix-SID

```
RP/0/RSP0/CPU0:router-arizona# traceroute mpls ipv4 10.1.1.4/32
Thu Dec 17 14:45:05.563 PST

Codes: '!' - success, 'Q' - request not sent, '.' - timeout,
  'L' - labeled output interface, 'B' - unlabeled output interface,
  'D' - DS Map mismatch, 'F' - no FEC mapping, 'f' - FEC mismatch,
  'M' - malformed request, 'm' - unsupported tlvs, 'N' - no rx label,
  'P' - no rx intf label prot, 'p' - premature termination of LSP,
  'R' - transit router, 'I' - unknown upstream index,
  'X' - unknown return code, 'x' - return code 0

Type escape sequence to abort.

  0 12.12.12.1 MRU 4470 [Labels: 16004 Exp: 0]
L 1 12.12.12.2 MRU 4470 [Labels: 16004 Exp: 0] 3 ms
L 2 23.23.23.3 MRU 4470 [Labels: implicit-null Exp: 0] 3 ms
! 3 34.34.34.4 11 ms
```

### MPLS Tree Trace for Prefix-SID

```
RP/0/RSP0/CPU0:router-arizona# traceroute mpls multipath ipv4 10.1.1.4/32
Thu Dec 17 14:55:46.549 PST

Starting LSP Path Discovery for 10.1.1.4/32

Codes: '!' - success, 'Q' - request not sent, '.' - timeout,
  'L' - labeled output interface, 'B' - unlabeled output interface,
  'D' - DS Map mismatch, 'F' - no FEC mapping, 'f' - FEC mismatch,
  'M' - malformed request, 'm' - unsupported tlvs, 'N' - no rx label,
  'P' - no rx intf label prot, 'p' - premature termination of LSP,
  'R' - transit router, 'I' - unknown upstream index,
  'X' - unknown return code, 'x' - return code 0

Type escape sequence to abort.

LL!
Path 0 found,
 output interface TenGigE0/0/0/0 nexthop 12.12.12.2  source 12.12.12.1 destination 127.0.0.0
 L!
Path 1 found,
 output interface TenGigE0/0/0/0 nexthop 12.12.12.2  source 12.12.12.1 destination 127.0.0.2
 LL!
Path 2 found,
 output interface TenGigE0/0/0/1 nexthop 15.15.15.5  source 15.15.15.1 destination 127.0.0.1
 L!
Path 3 found,
 output interface TenGigE0/0/0/1 nexthop 15.15.15.5  source 15.15.15.1 destination 127.0.0.0

Paths (found/broken/unexplored) (4/0/0)
 Echo Request (sent/fail) (10/0)
 Echo Reply (received/timeout) (10/0)
 Total Time Elapsed 53 ms
```

# MPLS LSP Ping and Traceroute Nil FEC Target

The Nil-FEC LSP ping and traceroute operations are extensions of regular MPLS ping and traceroute.

Nil-FEC LSP Ping/Traceroute functionality supports segment routing and MPLS Static. It also acts as an additional diagnostic tool for all other LSP types. This feature allows operators to provide the ability to freely test any label stack by allowing them to specify the following:

- label stack
- outgoing interface
- nexthop address

In the case of segment routing, each segment nodal label and adjacency label along the routing path is put into the label stack of an echo request message from the initiator Label Switch Router (LSR); MPLS data plane forwards this packet to the label stack target, and the label stack target sends the echo message back.

The following table shows the syntax for the ping and traceroute commands.

***Table 78: LSP Ping and Traceroute Nil FEC Commands***

| Command Syntax |
| --- |
| **ping mpls nil-fec labels** {*label*[**,***label*]} [**output** {**interface** *tx-interface*} [**nexthop** *nexthop-ip-addr*]] |
| **traceroute mpls nil-fec labels** {*label*[**,***label*]} [**output** {**interface** *tx-interface*} [**nexthop** *nexthop-ip-addr*]] |

# Examples: LSP Ping and Traceroute for Nil_FEC Target

These examples use the following topology:

```
Node loopback IP address: 172.18.1.3   172.18.1.4   172.18.1.5   172.18.1.7
Node label:                            16004        16005        16007
Nodes:                   Arizona ---- Utah ------- Wyoming ---- Texas

Interface:            GigabitEthernet0/2/0/1   GigabitEthernet0/2/0/1
Interface IP address:         10.1.1.3              10.1.1.4
```

```
RP/0/RSP0/CPU0:router-utah# show mpls forwarding

Tue Jul  5 13:44:31.999 EDT
Local  Outgoing    Prefix             Outgoing     Next Hop        Bytes
Label  Label       or ID              Interface                    Switched
------ ----------- ------------------ ------------ --------------- ------------
16004  Pop         No ID              Gi0/2/0/1    10.1.1.4        1392
       Pop         No ID              Gi0/2/0/2    10.1.2.2        0
16005  16005       No ID              Gi0/2/0/0    10.1.1.4        0
       16005       No ID              Gi0/2/0/1    10.1.2.2        0
16007  16007       No ID              Gi0/2/0/0    10.1.1.4        4752
       16007       No ID              Gi0/2/0/1    10.1.2.2        0
24000  Pop         SR Adj (idx 0)     Gi0/2/0/0    10.1.1.4        0
24001  Pop         SR Adj (idx 2)     Gi0/2/0/0    10.1.1.4        0
```

```
24002  Pop         SR Adj (idx 0)     Gi0/2/0/1    10.1.2.2        0
24003  Pop         SR Adj (idx 2)     Gi0/2/0/1    10.1.2.2        0
24004  Pop         No ID              tt10         point2point     0
24005  Pop         No ID              tt11         point2point     0
24006  Pop         No ID              tt12         point2point     0
24007  Pop         No ID              tt13         point2point     0
24008  Pop         No ID              tt30         point2point     0
```

### Ping Nil FEC Target

```
RP/0/RSP0/CPU0:router-arizona# ping mpls nil-fec labels 16005,16007 output interface
GigabitEthernet 0/2/0/1 nexthop 10.1.1.4 repeat 1
Sending 1, 72-byte MPLS Echos with Nil FEC labels 16005,16007,
     timeout is 2 seconds, send interval is 0 msec:

Codes: '!' - success, 'Q' - request not sent, '.' - timeout,
  'L' - labeled output interface, 'B' - unlabeled output interface,
  'D' - DS Map mismatch, 'F' - no FEC mapping, 'f' - FEC mismatch,
  'M' - malformed request, 'm' - unsupported tlvs, 'N' - no label entry,
  'P' - no rx intf label prot, 'p' - premature termination of LSP,
  'R' - transit router, 'I' - unknown upstream index,
  'd' - see DDMAP for return code,
  'X' - unknown return code, 'x' - return code 0

Type escape sequence to abort.
!
Success rate is 100 percent (1/1), round-trip min/avg/max = 1/1/1 ms
 Total Time Elapsed 0 ms
```

### Traceroute Nil FEC Target

```
RP/0/RSP0/CPU0:router-arizona# traceroute mpls nil-fec labels 16005,16007 output interface
 GigabitEthernet 0/2/0/1 nexthop 10.1.1.4
Tracing MPLS Label Switched Path with Nil FEC labels 16005,16007, timeout is 2 seconds

Codes: '!' - success, 'Q' - request not sent, '.' - timeout,
  'L' - labeled output interface, 'B' - unlabeled output interface,
  'D' - DS Map mismatch, 'F' - no FEC mapping, 'f' - FEC mismatch,
  'M' - malformed request, 'm' - unsupported tlvs, 'N' - no label entry,
  'P' - no rx intf label prot, 'p' - premature termination of LSP,
  'R' - transit router, 'I' - unknown upstream index,
  'd' - see DDMAP for return code,
  'X' - unknown return code, 'x' - return code 0

Type escape sequence to abort.
  0 10.1.1.3 MRU 1500 [Labels: 16005/16007/explicit-null Exp: 0/0/0]
L 1 10.1.1.4 MRU 1500 [Labels: implicit-null/16007/explicit-null Exp: 0/0/0] 1 ms
L 2 10.1.1.5 MRU 1500 [Labels: implicit-null/explicit-null Exp: 0/0] 1 ms
! 3 10.1.1.7 1 ms
```

# Segment Routing Ping and Traceroute

*Table 79: Feature History Table*

| Feature Name | Release Information | Feature Description |
|---|---|---|
| SR OAM for SR Policy (Policy Name / Binding SID / Custom label stack) | Release 7.3.1 | This feature extends SR OAM ping and traceroute function for an SR policy (or binding SID)-LSP end-point combination.<br>This addresses the limitations of the Nil-FEC LSP Ping and Traceroute function which cannot perform a ping operation to a segment list that is not associated with an installed SR policy. Also, it cannot validate egress device-specific SR policies. |

## Segment Routing Ping

The MPLS LSP ping feature is used to check the connectivity between ingress and egress of LSP. MPLS LSP ping uses MPLS echo request and reply messages, similar to Internet Control Message Protocol (ICMP) echo request and reply messages, to validate an LSP. Segment routing ping is an extension of the MPLS LSP ping to perform the connectivity verification on the segment routing control plane.

**Note** Segment routing ping can only be used when the originating device is running segment routing.

You can initiate the segment routing ping operation only when Segment Routing control plane is available at the originator, even if it is not preferred. This allows you to validate the SR path before directing traffic over the path. Segment Routing ping can use either generic FEC type or SR control-plane FEC type (SR-OSPF, SR-ISIS). In mixed networks, where some devices are running MPLS control plane (for example, LDP) or do not understand SR FEC, generic FEC type allows the device to successfully process and respond to the echo request. By default, generic FEC type is used in the target FEC stack of segment routing ping echo request. Generic FEC is not coupled to a particular control plane; it allows path verification when the advertising protocol is unknown or might change during the path of the echo request. If you need to specify the target FEC, you can select the FEC type as OSPF, IS-IS, or BGP. This ensures that only devices that are running segment routing control plane, and can therefore understand the segment routing IGP FEC, respond to the echo request.

### Configuration Examples

These examples show how to use segment routing ping to test the connectivity of a segment routing control plane. In the first example, FEC type is not specified. You can also specify the FEC type as shown in the other examples.

```
RP/0/RSP0/CPU0:router# ping sr-mpls 10.1.1.2/32

Sending 5, 100-byte MPLS Echos to 10.1.1.2/32,
      timeout is 2 seconds, send interval is 0 msec:

Codes: '!' - success, 'Q' - request not sent, '.' - timeout,
  'L' - labeled output interface, 'B' - unlabeled output interface,
```

```
  'D' - DS Map mismatch, 'F' - no FEC mapping, 'f' - FEC mismatch,
  'M' - malformed request, 'm' - unsupported tlvs, 'N' - no rx label,
  'P' - no rx intf label prot, 'p' - premature termination of LSP,
  'R' - transit router, 'I' - unknown upstream index,
  'X' - unknown return code, 'x' - return code 0

Type escape sequence to abort.

!!!!!
Success rate is 100 percent (5/5), round-trip min/avg/max = 1/2/5 ms

RP/0/RSP0/CPU0:router# ping sr-mpls 10.1.1.2/32 fec-type generic

Sending 5, 100-byte MPLS Echos to 10.1.1.2/32,
      timeout is 2 seconds, send interval is 0 msec:

Codes: '!' - success, 'Q' - request not sent, '.' - timeout,
  'L' - labeled output interface, 'B' - unlabeled output interface,
  'D' - DS Map mismatch, 'F' - no FEC mapping, 'f' - FEC mismatch,
  'M' - malformed request, 'm' - unsupported tlvs, 'N' - no rx label,
  'P' - no rx intf label prot, 'p' - premature termination of LSP,
  'R' - transit router, 'I' - unknown upstream index,
  'X' - unknown return code, 'x' - return code 0

Type escape sequence to abort.

!!!!!
Success rate is 100 percent (5/5), round-trip min/avg/max = 1/1/2 ms


RP/0/RSP0/CPU0:router# ping sr-mpls 10.1.1.2/32 fec-type igp ospf

Sending 5, 100-byte MPLS Echos to 10.1.1.2/32,
      timeout is 2 seconds, send interval is 0 msec:

Codes: '!' - success, 'Q' - request not sent, '.' - timeout,
  'L' - labeled output interface, 'B' - unlabeled output interface,
  'D' - DS Map mismatch, 'F' - no FEC mapping, 'f' - FEC mismatch,
  'M' - malformed request, 'm' - unsupported tlvs, 'N' - no rx label,
  'P' - no rx intf label prot, 'p' - premature termination of LSP,
  'R' - transit router, 'I' - unknown upstream index,
  'X' - unknown return code, 'x' - return code 0

Type escape sequence to abort.

!!!!!
Success rate is 100 percent (5/5), round-trip min/avg/max = 1/1/2 ms


RP/0/RSP0/CPU0:router# ping sr-mpls 10.1.1.2/32 fec-type igp isis

Sending 5, 100-byte MPLS Echos to 10.1.1.2/32,
      timeout is 2 seconds, send interval is 0 msec:

Codes: '!' - success, 'Q' - request not sent, '.' - timeout,
  'L' - labeled output interface, 'B' - unlabeled output interface,
  'D' - DS Map mismatch, 'F' - no FEC mapping, 'f' - FEC mismatch,
  'M' - malformed request, 'm' - unsupported tlvs, 'N' - no rx label,
  'P' - no rx intf label prot, 'p' - premature termination of LSP,
  'R' - transit router, 'I' - unknown upstream index,
  'X' - unknown return code, 'x' - return code 0

Type escape sequence to abort.

!!!!!
```

```
Success rate is 100 percent (5/5), round-trip min/avg/max = 1/1/2 ms

RP/0/RSP0/CPU0:router# ping sr-mpls 10.1.1.2/32 fec-type bgp

Sending 5, 100-byte MPLS Echos to 10.1.1.2/32,
      timeout is 2 seconds, send interval is 0 msec:

Codes: '!' - success, 'Q' - request not sent, '.' - timeout,
  'L' - labeled output interface, 'B' - unlabeled output interface,
  'D' - DS Map mismatch, 'F' - no FEC mapping, 'f' - FEC mismatch,
  'M' - malformed request, 'm' - unsupported tlvs, 'N' - no rx label,
  'P' - no rx intf label prot, 'p' - premature termination of LSP,
  'R' - transit router, 'I' - unknown upstream index,
  'X' - unknown return code, 'x' - return code 0

Type escape sequence to abort.

!!!!!
Success rate is 100 percent (5/5), round-trip min/avg/max = 1/1/2 ms
```

### Ping for SR Policy

You can perform the ping operation for an SR policy (or binding SID), and LSP end-point combination. Use the **ping** command's **policy name lsp-end-point** and **policy binding-sid lsp-end-point** options to perform this task. You can instantiate the policy through the CLI, Netconf, PCEP or BGP-TE process.

IPv6 policies are not supported for SR OAM function.

**Note** As a prerequisite, you must enable the MPLS OAM function.

```
Router(config)# mpls oam
Router(config)# commit

Router# ping sr-mpls policy name srte_c_4_ep_10.0.0.1 lsp-end-point 209.165.201.1
Router# ping sr-mpls policy binding-sid 1000 lsp-end-point 209.165.201.1
```

# Segment Routing Traceroute

The MPLS LSP traceroute is used to isolate the failure point of an LSP. It is used for hop-by-hop fault localization and path tracing. The MPLS LSP traceroute feature relies on the expiration of the Time to Live (TTL) value of the packet that carries the echo request. When the MPLS echo request message hits a transit node, it checks the TTL value and if it is expired, the packet is passed to the control plane, else the message is forwarded. If the echo message is passed to the control plane, a reply message is generated based on the contents of the request message. Segment routing traceroute feature extends the MPLS LSP traceroute functionality to segment routing networks.

Similar to segment routing ping, you can initiate the segment routing traceroute operation only when Segment Routing control plane is available at the originator, even if it is not preferred. Segment Routing traceroute can use either generic FEC type or SR control-plane FEC type (SR-OSPF, SR-ISIS). By default, generic FEC type is used in the target FEC stack of segment routing traceroute echo request. If you need to specify the target FEC, you can select the FEC type as OSPF, IS-IS, or BGP. This ensures that only devices that are running segment routing control plane, and can therefore understand the segment routing IGP FEC, respond to the echo request.

The existence of load balancing at routers in an MPLS network provides alternate paths for carrying MPLS traffic to a target router. The multipath segment routing traceroute feature provides a means to discover all possible paths of an LSP between the ingress and egress routers.

### Configuration Examples

These examples show how to use segment routing traceroute to trace the LSP for a specified IPv4 prefix SID address. In the first example, FEC type is not specified. You can also specify the FEC type as shown in the other examples.

```
RP/0/RSP0/CPU0:router# traceroute sr-mpls 10.1.1.2/32

Tracing MPLS Label Switched Path to 10.1.1.2/32, timeout is 2 seconds

Codes: '!' - success, 'Q' - request not sent, '.' - timeout,
  'L' - labeled output interface, 'B' - unlabeled output interface,
  'D' - DS Map mismatch, 'F' - no FEC mapping, 'f' - FEC mismatch,
  'M' - malformed request, 'm' - unsupported tlvs, 'N' - no rx label,
  'P' - no rx intf label prot, 'p' - premature termination of LSP,
  'R' - transit router, 'I' - unknown upstream index,
  'X' - unknown return code, 'x' - return code 0

Type escape sequence to abort.

  0 10.12.12.1 MRU 1500 [Labels: implicit-null Exp: 0]
! 1 10.12.12.2 3 ms


RP/0/RSP0/CPU0:router# traceroute sr-mpls 10.1.1.2/32  fec-type generic

Tracing MPLS Label Switched Path to 10.1.1.2/32, timeout is 2 seconds

Codes: '!' - success, 'Q' - request not sent, '.' - timeout,
  'L' - labeled output interface, 'B' - unlabeled output interface,
  'D' - DS Map mismatch, 'F' - no FEC mapping, 'f' - FEC mismatch,
  'M' - malformed request, 'm' - unsupported tlvs, 'N' - no rx label,
  'P' - no rx intf label prot, 'p' - premature termination of LSP,
  'R' - transit router, 'I' - unknown upstream index,
  'X' - unknown return code, 'x' - return code 0

Type escape sequence to abort.

  0 10.12.12.1 MRU 1500 [Labels: implicit-null Exp: 0]
! 1 10.12.12.2 2 ms


RP/0/RSP0/CPU0:router# traceroute sr-mpls 10.1.1.2/32  fec-type  igp ospf

Tracing MPLS Label Switched Path to 10.1.1.2/32, timeout is 2 seconds

Codes: '!' - success, 'Q' - request not sent, '.' - timeout,
  'L' - labeled output interface, 'B' - unlabeled output interface,
  'D' - DS Map mismatch, 'F' - no FEC mapping, 'f' - FEC mismatch,
  'M' - malformed request, 'm' - unsupported tlvs, 'N' - no rx label,
  'P' - no rx intf label prot, 'p' - premature termination of LSP,
  'R' - transit router, 'I' - unknown upstream index,
  'X' - unknown return code, 'x' - return code 0

Type escape sequence to abort.

  0 10.12.12.1 MRU 1500 [Labels: implicit-null Exp: 0]
! 1 10.12.12.2 2 ms
```

```
RP/0/RSP0/CPU0:router# traceroute sr-mpls 10.1.1.2/32  fec-type  igp isis

Tracing MPLS Label Switched Path to 10.1.1.2/32, timeout is 2 seconds

Codes: '!' - success, 'Q' - request not sent, '.' - timeout,
  'L' - labeled output interface, 'B' - unlabeled output interface,
  'D' - DS Map mismatch, 'F' - no FEC mapping, 'f' - FEC mismatch,
  'M' - malformed request, 'm' - unsupported tlvs, 'N' - no rx label,
  'P' - no rx intf label prot, 'p' - premature termination of LSP,
  'R' - transit router, 'I' - unknown upstream index,
  'X' - unknown return code, 'x' - return code 0

Type escape sequence to abort.

  0 10.12.12.1 MRU 1500 [Labels: implicit-null Exp: 0]
! 1 10.12.12.2 2 ms


RP/0/RSP0/CPU0:router#traceroute sr-mpls 10.1.1.2/32 fec-type bgp


Tracing MPLS Label Switched Path to 10.1.1.2/32, timeout is 2 seconds

Codes: '!' - success, 'Q' - request not sent, '.' - timeout,
  'L' - labeled output interface, 'B' - unlabeled output interface,
  'D' - DS Map mismatch, 'F' - no FEC mapping, 'f' - FEC mismatch,
  'M' - malformed request, 'm' - unsupported tlvs, 'N' - no rx label,
  'P' - no rx intf label prot, 'p' - premature termination of LSP,
  'R' - transit router, 'I' - unknown upstream index,
  'X' - unknown return code, 'x' - return code 0

Type escape sequence to abort.


  0 10.12.12.1 MRU 1500 [Labels: implicit-null/implicit-null Exp: 0/0]
! 1 10.12.12.2 2 ms
```

This example shows how to use multipath traceroute to discover all the possible paths for a IPv4 prefix SID.

```
RP/0/RSP0/CPU0:router# traceroute sr-mpls multipath 10.1.1.2/32

Starting LSP Path Discovery for 10.1.1.2/32

Codes: '!' - success, 'Q' - request not sent, '.' - timeout,
  'L' - labeled output interface, 'B' - unlabeled output interface,
  'D' - DS Map mismatch, 'F' - no FEC mapping, 'f' - FEC mismatch,
  'M' - malformed request, 'm' - unsupported tlvs, 'N' - no rx label,
  'P' - no rx intf label prot, 'p' - premature termination of LSP,
  'R' - transit router, 'I' - unknown upstream index,
  'X' - unknown return code, 'x' - return code 0

Type escape sequence to abort.

!
Path 0 found,
 output interface GigabitEthernet0/0/0/2 nexthop 10.13.13.2
source 10.13.13.1 destination 127.0.0.0
!
Path 1 found,
 output interface Bundle-Ether1 nexthop 10.12.12.2
source 10.12.12.1 destination 127.0.0.0

Paths (found/broken/unexplored) (2/0/0)
Echo Request (sent/fail) (2/0)
```

```
Echo Reply (received/timeout) (2/0)
Total Time Elapsed 14 ms
```

### Traceroute for SR Policy

You can perform the traceroute operation for an SR policy (or binding SID), and LSP end-point combination. Use the **traceroute** command's **policy name lsp-end-point** and **policy binding-sid lsp-end-point** options to perform this task. You can instantiate the policy through the CLI, Netconf, PCEP or BGP-TE process.

IPv6 policies are not supported for SR OAM function.

**Note** As a prerequisite, you must enable the MPLS OAM function.

```
Router(config)# mpls oam
Router(config)# commit

Router# traceroute sr-mpls policy name srte_c_4_ep_10.0.0.1 lsp-end-point 209.165.201.1
Router# traceroute sr-mpls policy binding-sid 1000 lsp-end-point 209.165.201.1
```

## Segment Routing Treetrace Enhancements

*Table 80: Feature History Table*

| Feature Name | Release | Description |
|---|---|---|
| Segment Routing Treetrace Enhancements | Release 7.3.2 | The OAM Treetrace operation provides enhanced traceroute functionality to validate ECMP paths between two endpoints.<br>This feature augments the Treetrace operation to support SR policies, SR NIL FEC, SR Flex Algo, or a custom list of labels. |

The SR-OAM Treetrace (multipath traceroute) operation provides enhanced traceroute functionality to validate ECMP paths between two endpoints.

The Segment Routing Treetrace enhancements augment the Treetrace operation to support SR policies, Flex Algo labels, or a custom list of labels.

- Use the **traceroute sr-mpls multipath policy** EXEC command to specify the target SR policy.
- Use the **traceroute sr-mpls multipath labels** EXEC command to specify the target custom list of labels:
  - The custom list can have 1 to 12 prefix-SID labels.
  - A label can be Algo 0 or Flex Algo prefix-SID label.
- Use the **traceroute sr-mpls multipath nil-fec** EXEC command to specify the target custom list of labels and outgoing information or the target SR policy, to be verified using Nil FEC.

**Note** As a prerequisite, you must enable the MPLS OAM function.

```
Router(config)# mpls oam
Router(config-oam)# commit
```

### Example 1: Treetrace Operation for an SR Policy

```
Router# traceroute sr-mpls multipath policy name srte_c_10_ep_192.168.0.3 lsp-endpoint
192.168.0.3

 Starting LSP Path Discovery for SR Policy with name [srte_c_10_ep_192.168.0.3]

Codes: '!' - success, 'Q' - request not sent, '.' - timeout,
  'L' - labeled output interface, 'B' - unlabeled output interface,
  'D' - DS Map mismatch, 'F' - no FEC mapping, 'f' - FEC mismatch,
  'M' - malformed request, 'm' - unsupported tlvs, 'N' - no rx label,
  'P' - no rx intf label prot, 'p' - premature termination of LSP,
  'R' - transit router, 'I' - unknown upstream index,
  'X' - unknown return code, 'x' - return code 0

Type escape sequence to abort.

L!
Path 0 found,
 output interface GigabitEthernet0/0/0/0 nexthop 10.10.10.2
 source 10.10.10.1 destination 127.0.0.0
L!
Path 1 found,
 output interface GigabitEthernet0/0/0/1 nexthop 11.11.11.2
 source 11.11.11.1 destination 127.0.0.0

Paths (found/broken/unexplored) (2/0/0)
 Echo Request (sent/fail) (4/0)
 Echo Reply (received/timeout) (4/0)
 Total Time Elapsed 14 ms
```

### Example 2: Treetrace Operation for an SR Policy with Nil FEC

```
Router# traceroute sr-mpls multipath nil-fec policy name srte_c_10_ep_192.168.0.3

 Starting LSP Path Discovery for SR Policy with name [srte_c_10_ep_192.168.0.3]

Codes: '!' - success, 'Q' - request not sent, '.' - timeout,
  'L' - labeled output interface, 'B' - unlabeled output interface,
  'D' - DS Map mismatch, 'F' - no FEC mapping, 'f' - FEC mismatch,
  'M' - malformed request, 'm' - unsupported tlvs, 'N' - no rx label,
  'P' - no rx intf label prot, 'p' - premature termination of LSP,
  'R' - transit router, 'I' - unknown upstream index,
  'X' - unknown return code, 'x' - return code 0

Type escape sequence to abort.

L!
Path 0 found,
 output interface GigabitEthernet0/0/0/0 nexthop 10.10.10.2
 source 10.10.10.1 destination 127.0.0.0
L!
Path 1 found,
 output interface GigabitEthernet0/0/0/1 nexthop 11.11.11.2
```

```
 source 11.11.11.1 destination 127.0.0.0

Paths (found/broken/unexplored) (2/0/0)
 Echo Request (sent/fail) (4/0)
 Echo Reply (received/timeout) (4/0)
 Total Time Elapsed 14 ms
```

### Example 3: Treetrace Operation for a Custom List of Labels with SR Label FEC

```
Router# traceroute sr-mpls multipath labels 16128 lsp-end-point 10.1.1.5

Starting LSP Path Discovery for SR Label FEC with lsp end point 10.1.1.5, SID Label(s)
[16128]

Codes: '!' - success, 'Q' - request not sent, '.' - timeout,
  'L' - labeled output interface, 'B' - unlabeled output interface,
  'D' - DS Map mismatch, 'F' - no FEC mapping, 'f' - FEC mismatch,
  'M' - malformed request, 'm' - unsupported tlvs, 'N' - no rx label,
  'P' - no rx intf label prot, 'p' - premature termination of LSP,
  'R' - transit router, 'I' - unknown upstream index,
  'X' - unknown return code, 'x' - return code 0

Type escape sequence to abort.

LL!
Path 0 found,
 output interface GigabitEthernet0/0/0/0 nexthop 10.10.10.2
source 10.10.10.1 destination 127.0.0.0
LL!
Path 1 found,
 output interface GigabitEthernet0/0/0/1 nexthop 11.11.11.2
source 11.11.11.1 destination 127.0.0.0

Paths (found/broken/unexplored) (2/0/0)
Echo Request (sent/fail) (6/0)
Echo Reply (received/timeout) (6/0)
Total Time Elapsed 30 ms
```

### Example 4: Treetrace Operation for a Custom List of Labels with Nil FEC

```
Router# traceroute sr-mpls multipath labels 16004,16005 output interface GigabitEthernet
0/0/0/2 nexthop 12.12.12.3

Starting LSP Path Discovery for Nil FEC with labels [16004,16005]

Codes: '!' - success, 'Q' - request not sent, '.' - timeout,
  'L' - labeled output interface, 'B' - unlabeled output interface,
  'D' - DS Map mismatch, 'F' - no FEC mapping, 'f' - FEC mismatch,
  'M' - malformed request, 'm' - unsupported tlvs, 'N' - no rx label,
  'P' - no rx intf label prot, 'p' - premature termination of LSP,
  'R' - transit router, 'I' - unknown upstream index,
  'X' - unknown return code, 'x' - return code 0

Type escape sequence to abort.

LL!
Path 0 found,
 output interface GigabitEthernet0/0/0/2 nexthop 12.12.12.3
 source 12.12.12.1 destination 127.0.0.2
!
Path 1 found,
 output interface GigabitEthernet0/0/0/2 nexthop 12.12.12.3
 source 12.12.12.1 destination 127.0.0.0
```

```
Paths (found/broken/unexplored) (2/0/0)
 Echo Request (sent/fail) (4/0)
 Echo Reply (received/timeout) (4/0)
 Total Time Elapsed 30 ms
```

# Segment Routing Ping and Traceroute for Flexible Algorithm

Flexible Algorithm validation method is based on segment identifier (SID) label and label switched path (LSP) destination, instead of being based on IP address. The assigner is validated against the topology prefix information provided by SR-PCE database. If the assigner is valid, then the label given is also validated against the SR-PCE database. On the egress side, the destination label is contained in a new SR Label sub-TLV. This label is verified against a SID list provided by SR-PCE.

**Note** Observe the following guidelines and restrictions:

- All routers within an area must share the same Flexible Algorithm definition for a Flexible Algorithm to be valid.
- All routers within the domain must be configured with the same SRGB range of values.
- BGP-LS must be enabled.
- Only prefix SIDs and Flexible Algorithm SIDs are supported.
- Only single label stack is supported.

## Segment Routing Ping for Flexible Algorithm

```
Router# ping sr-mpls labels 16131 lsp-end-point 10.1.1.5
Fri Dec 13 19:26:29.517 IST

Sending 5, 100-byte MPLS Echos with SR Label FEC with lsp end point 10.1.1.5, SID Label(s)
 [16131],
      timeout is 2 seconds, send interval is 0 msec:

Codes: '!' - success, 'Q' - request not sent, '.' - timeout,
  'L' - labeled output interface, 'B' - unlabeled output interface,
  'D' - DS Map mismatch, 'F' - no FEC mapping, 'f' - FEC mismatch,
  'M' - malformed request, 'm' - unsupported tlvs, 'N' - no rx label,
  'P' - no rx intf label prot, 'p' - premature termination of LSP,
  'R' - transit router, 'I' - unknown upstream index,
  'X' - unknown return code, 'x' - return code 0

Type escape sequence to abort.

!!!!!
Success rate is 100 percent (5/5), round-trip min/avg/max = 4/4/6 ms
```

# Segment Routing Traceroute for Flexible Algorithm

```
Router# traceroute sr-mpls labels 16130 lsp-end-point 10.1.1.5
Fri Dec 13 19:26:59.368 IST

Tracing MPLS Label Switched Path to SR Label FEC with lsp end point 10.1.1.5, SID Label(s)
 [16130], timeout is 2 seconds

Codes: '!' - success, 'Q' - request not sent, '.' - timeout,
  'L' - labeled output interface, 'B' - unlabeled output interface,
  'D' - DS Map mismatch, 'F' - no FEC mapping, 'f' - FEC mismatch,
  'M' - malformed request, 'm' - unsupported tlvs, 'N' - no rx label,
  'P' - no rx intf label prot, 'p' - premature termination of LSP,
  'R' - transit router, 'I' - unknown upstream index,
 'X' - unknown return code, 'x' - return code 0

Type escape sequence to abort.

  0 13.13.13.1 MRU 1500 [Labels: 16130 Exp: 0]
L 1 13.13.13.3 MRU 1500 [Labels: 16130 Exp: 0] 5 ms
L 2 16.16.16.4 MRU 1500 [Labels: implicit-null Exp: 0] 4 ms
! 3 18.18.18.5 4 ms
```

# Segment Routing Policy Nil-FEC Ping and Traceroute

Segment routing OAM supports Nil-FEC LSP ping and traceroute operations to verify the connectivity for segment routing MPLS data plane. For the existing Nil-FEC ping and traceroute commands, you need to specify the entire outgoing label stack, outgoing interface, as well as the next hop. SR policy Nil-FEC ping and SR policy Nil-FEC traceroute enhancements extend the data plane validation functionality of installed SR policies through Nil-FEC ping and traceroute commands while simplifying the operational process. Instead of specifying the entire outgoing label-stack, interface, and next-hop, you can use the policy name or the policy binding-SID label value to initiate Nil-FEC ping and traceroute operations for the SR policies. Specification of outgoing interface and next-hop is also not required for policy Nil-FEC OAM operations.

### Restrictions and Usage Guidelines

The following restrictions and guidelines apply for this feature:

- You cannot select a specific candidate path for SR policy Nil-FEC ping and traceroute.
- You cannot use SR policy Nil-FEC ping or traceroute for non-selected candidate paths.

### Examples: SR Policy Nil-FEC Ping

These examples show how to use SR policy Nil-FEC ping for a SR policy. The first example refers the SR policy-name while the second example refers the BSID.

```
RP/0/0/CPU0:router# ping sr-mpls nil-fec policy name POLICY1
Thu Feb 22 06:56:50.006 PST
Sending 5, 100-byte MPLS Echos with Nil FEC for SR-TE Policy POLICY1,
      timeout is 2 seconds, send interval is 0 msec:
Codes: '!' - success, 'Q' - request not sent, '.' - timeout,
  'L' - labeled output interface, 'B' - unlabeled output interface,
  'D' - DS Map mismatch, 'F' - no FEC mapping, 'f' - FEC mismatch,
  'M' - malformed request, 'm' - unsupported tlvs, 'N' - no rx label,
  'P' - no rx intf label prot, 'p' - premature termination of LSP,
```

```
  'R' - transit router, 'I' - unknown upstream index,
  'X' - unknown return code, 'x' - return code 0
Type escape sequence to abort.
!!!!!
Success rate is 100 percent (5/5), round-trip min/avg/max = 1/5/22 ms


RP/0/0/CPU0:router# ping sr-mpls nil-fec policy binding-sid 100001
Thu Dec 17 12:41:02.381 EST
Sending 5, 100-byte MPLS Echos with Nil FEC with labels [16002,16003],
      timeout is 2 seconds, send interval is 0 msec:
Codes: '!' - success, 'Q' - request not sent, '.' - timeout,
  'L' - labeled output interface, 'B' - unlabeled output interface,
  'D' - DS Map mismatch, 'F' - no FEC mapping, 'f' - FEC mismatch,
  'M' - malformed request, 'm' - unsupported tlvs, 'N' - no rx label,
  'P' - no rx intf label prot, 'p' - premature termination of LSP,
  'R' - transit router, 'I' - unknown upstream index,
  'X' - unknown return code, 'x' - return code 0

Type escape sequence to abort.
!!!!!
Success rate is 100 percent (5/5), round-trip min/avg/max = 2/3/3 ms
```

### Examples: SR Policy Nil-FEC Traceroute

These examples show how to use SR policy Nil-FEC traceroute for a SR policy. The first example refers the SR policy-name while the second example refers the binding SID (BSID).

```
RP/0/0/CPU0:router#  traceroute sr-mpls nil-fec policy name POLICY1
Thu Feb 22 06:57:03.637 PST
Tracing MPLS Label Switched Path with Nil FEC for SR-TE Policy POLICY1, timeout is 2 seconds
Codes: '!' - success, 'Q' - request not sent, '.' - timeout,
  'L' - labeled output interface, 'B' - unlabeled output interface,
  'D' - DS Map mismatch, 'F' - no FEC mapping, 'f' - FEC mismatch,
  'M' - malformed request, 'm' - unsupported tlvs, 'N' - no rx label,
  'P' - no rx intf label prot, 'p' - premature termination of LSP,
  'R' - transit router, 'I' - unknown upstream index,
  'X' - unknown return code, 'x' - return code 0
Type escape sequence to abort.
  0 11.11.11.1 MRU 1500 [Labels: 16003/explicit-null Exp: 0/0]
L 1 11.11.11.2 MRU 1500 [Labels: implicit-null/explicit-null Exp: 0/0] 4 ms
! 2 14.14.14.3 2 ms



RP/0/0/CPU0:router# traceroute sr-mpls nil-fec binding-sid 100001
Tracing MPLS Label Switched Path with Nil FEC with labels [16002/16004], timeout is 2 seconds

Codes: '!' - success, 'Q' - request not sent, '.' - timeout,
  'L' - labeled output interface, 'B' - unlabeled output interface,
  'D' - DS Map mismatch, 'F' - no FEC mapping, 'f' - FEC mismatch,
  'M' - malformed request, 'm' - unsupported tlvs, 'N' - no rx label,
  'P' - no rx intf label prot, 'p' - premature termination of LSP,
  'R' - transit router, 'I' - unknown upstream index,
  'X' - unknown return code, 'x' - return code 0
Type escape sequence to abort.
  0 99.1.2.1 MRU 4470 [Labels: 16002/16004/explicit-null Exp: 0/0/0]
L 1 99.1.2.2 MRU 4470 [Labels: 16004/explicit-null Exp: 0/0] 3 ms
L 2 99.2.6.6 MRU 4470 [Labels: implicit-null Exp: 0] 3 ms
! 3 99.4.6.4 11 ms
```

# Segment Routing over IPv6 OAM

Segment Routing over IPv6 data plane (SRv6) implementation adds a new type of routing extension header. Hence, the existing ICMPv6 mechanisms including ping and traceroute can be used in the SRv6 network. There is no change in the way ping and traceroute operations work for IPv6- or SRv6-capable nodes in an SRv6 network.

### Restrictions and Usage Guidelines

The following restriction applies for SRv6 OAM:

- Ping to an SRv6 SID is not supported.

### Examples: SRv6 OAM

The following example shows using ping in an SRv6 network.

```
RP/0/RP0/CPU0:Router# ping ipv6 2001::33:33:33:33
Mon Sep 17 20:04:10.068 UTC
Type escape sequence to abort.
Sending 5, 100-byte ICMP Echos to 2001::33:33:33:33, timeout is 2 seconds:
!!!!!
Success rate is 100 percent (5/5), round-trip min/avg/max = 1/3/4 ms
```

The following example shows using traceroute in an SRv6 network.

```
RP/0/RP0/CPU0:Router# traceroute ipv6 2001::33:33:33:33 probe 1 timeout 0 srv6
Fri Sep 14 15:59:25.170 UTC
Type escape sequence to abort.
Tracing the route to 2001::33:33:33:33
 1  2001::22:22:22:22[IP tunnel: DA=cafe:0:0:a4:1:::: SRH =(2001::33:33:33:33   ,SL=1)] 2
msec
 2  2001::2:2:2:2[IP tunnel: DA=cafe:0:0:a4:1:::: SRH =(2001::33:33:33:33   ,SL=1)] 2 msec
 3  2001::44:44:44:44 2 msec
 4  2001::33:33:33:33 3 msec
```

The following example shows using traceroute in an SRv6 network without an SRH.

```
RP/0/RSP1/CPU0:Router# traceroute ipv6 2001::44:44:44:44 srv6
Wed Jan 16 14:35:27.511 UTC
Type escape sequence to abort.
Tracing the route to 2001::44:44:44:44
 1 2001::2:2:2:2 3 msec 2 msec 2 msec
 2 2001::44:44:44:44 3 msec 3 msec 3 msec
```

The following example shows using ping for a specified IP address in the VRF.

```
RP/0/RP0/CPU0:Router# ping 10.15.15.1 vrf red
Mon Sep 17 20:07:10.085 UTC
Type escape sequence to abort.
Sending 5, 100-byte ICMP Echos to 10.15.15.1, timeout is 2 seconds:
!!!!!
Success rate is 100 percent (5/5), round-trip min/avg/max = 1/2/4 ms
```

The following example shows using traceroute for a specified IP address in the VRF.

```
RP/0/RP0/CPU0:Router# traceroute 10.15.15.1 vrf red
Mon Sep 17 20:07:18.478 UTC

Type escape sequence to abort.
Tracing the route to 10.15.15.1
 1  10.15.15.1 3 msec  2 msec  2 msec
```

The following example shows using traceroute for CE1 (4.4.4.5) to CE2 (5.5.5.5) in the VRF:

```
RP/0/RP0/CPU0:Router# traceroute 5.5.5.5 vrf a
Wed Jan 16 15:08:46.264 UTC

Type escape sequence to abort.
Tracing the route to 5.5.5.5
 1  14.14.14.1 5 msec 1 msec 1 msec
 2  15.15.15.1 3 msec 2 msec 2 msec
 3  15.15.15.2 2 msec * 3 msec
```

# Segment Routing Data Plane Monitoring

Unreported traffic drops in MPLS networks could be difficult to detect and isolate. They can be caused by user configuration, out-of-sync neighbors, or incorrect data-plane programming. Segment Routing Data Plane Monitoring (SR DPM) provides a scalable solution to address data-plane consistency verification and detection of unreported traffic drops. SR DPM validates the actual data plane status of all FIB entries associated with SR IGP prefix SIDs.

The primary benefits of SR DPM include:

- **Automation** – A node automatically verifies the integrity of the actual forwarding entries exercised by transit traffic.
- **Comprehensive Coverage** – Tests validate forwarding consistency for each set of destination prefixes across each combination of upstream and downstream neighbors and across all ECMP possibilities.
- **Scalability** – SR DPM is a highly scalable solution due to its localized detection process.
- **Proactive and Reactive modes of operation** – Solution caters to both continuous and on-demand verification.
- **Standards-based** – SR DPM uses existing MPLS OAM tools and leverages SR to enforce test traffic path.

DPM performs data plane validation in two phases:

- Adjacency Validation—Using special MPLS echo request packets, adjacency validation ensures that all local links are able to forward and receive MPLS traffic correctly from their neighbors. It also ensures that DPM is able to verify all local adjacency SID labels and to flag any inconsistencies, including traffic drops, forwarding by the local or neighboring device to an incorrect neighbor that is not associated with the specified adjacency, or forwarding by the local or neighboring device to the correct neighbor but over an incorrect link not associated with the specified adjacency. DPM validates the following adjacencies for each link when available:
  - Unprotected adjacency
  - Protected adjacency

- Static adjacency
- Dynamic adjacency
- Shared adjacency

**Note** Observe the following limitations for adjacency validation:

- The adjacency validation phase only validates links that are participating in IGP (OSPF and IS-IS) instances. If one or more link is not part of the IGP, it will not be validated since there are no Adjacency SID labels.
- Adjacency validation only validates physical and bundle links, including broadcast links.

- Prefix Validation—Prefix validation identifies any forwarding inconsistency of any IGP Prefix SID reachable from the device. The validation is done for all upstream and downstream neighbor combinations of each prefix SID, and identifies inconsistencies in the downstream neighbor. The prefix validation phase simulates customer traffic path by validating both ingress and egress forwarding chain at the DPM processing node.

  Since prefix validation is localized to a device running DPM as well as its immediate neighbors, it does not suffer from scale limitations of end-to-end monitoring.

  Prefix validation builds on top of adjacency validation by using special MPLS echo requests that travel to the upstream node, return to the DPM-processing node, and time-to-live (TTL) expire at the immediate downstream node, thus exercising entire forwarding path towards the downstream.

**Note** Observe the following limitations for prefix validation:

- Because prefix validation builds on top of adjacency validation, if a link is not part of adjacency validation, it is not used in prefix validation.
- If all adjacencies are marked as “Faulty” during adjacency validation, prefix validation is not performed.
- If a node only has downstream links at a specific node, but no upstream node (possible in certain PE node scenarios), Prefix Validation is not performed.
- Prefix validation does not support TI-LFA.

DPM maintains a database of all prefixes and adjacencies being monitored.

The prefix database is populated by registering as a redistribution client to RIB, which enables DPM to keep the database up-to-date whenever IGP pushes a new prefix SID to RIB, deletes an existing prefix SID, or when the path of an existing prefix SID is modified.

DPM maintains the following prefix data:

- IPv4 Prefix
- Prefix Length

- Prefix SID label
- Error stats

DPM also maintains a list of all local adjacencies. DPM maintains a database that contains local links, their respective local and remote adjacency labels and IP addresses, and error stats.

### SR-DPM Operation: Example

The following SR-DPM operation example use the following scenarios:

*Figure 44: Test Iteration A Path*

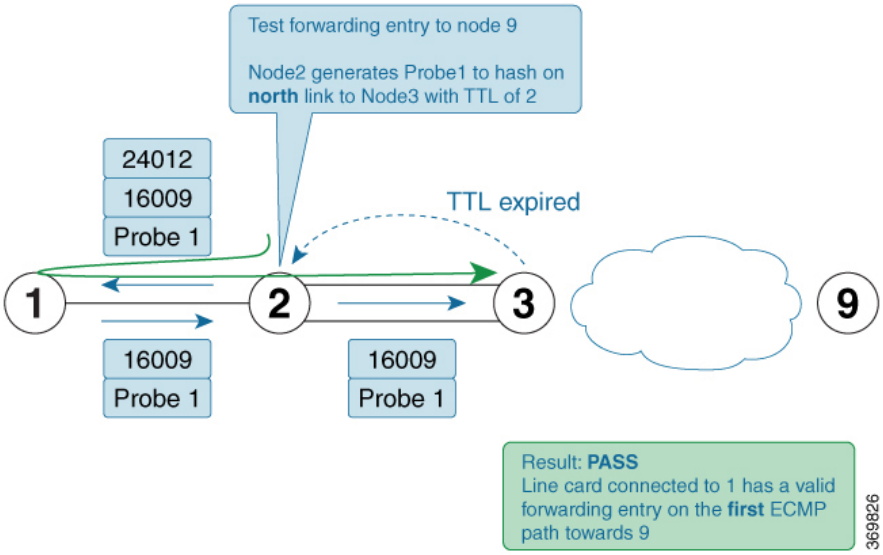


*Figure 45: Test Iteration B Path*

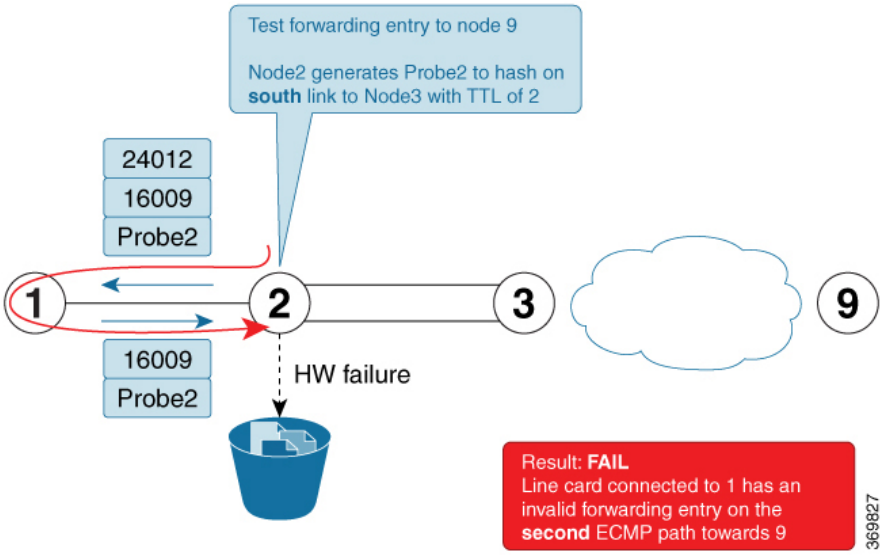

Node 2 is a DPM-capable device. DPM is enabled ***in proactive mode*** to perform forwarding consistency tests for all prefix-SIDs in the network. For each destination prefix, the router identifies the directly connected upstream and downstream neighbors used to reach a given destination.

Using node 9 as the prefix under test (prefix-SID = 16009), node 1 is designated as the upstream node and node 3 as the downstream nodes with 2 ECMPs.

1. Node 2 generates test traffic (MPLS OAM ping with source_ip of node 2) to test its forwarding for every upstream/downstream combination. In this case, two combinations exist:
   - Prefix-SID node 9 - test iteration A path = Node 2 to Node 1 to Node 2 to Node 3 (via **top** ECMP)
   - Prefix-SID node 9 - test iteration B path = Node 2 to Node 1 to Node 2 to Node 3 (via **bottom** ECMP)
2. Node 2 adds a label stack in order to enforce the desired path for the test traffic. For example, two labels are added to the packet for test iterations A and B:
   - The top label is equal to the adjacency-SID on node 1 for the interface facing node 2 (adjacency SID = 24012). The bottom label is the prefix-SID under test (16009). The test traffic is sent on the interface facing node 1.
   - The top label (after being POPed at node 1) causes the test traffic to come back to node 2. This returning traffic is completely hardware-switched based on the forwarding entry for the prefix-SID under test (16009). Note that the labeled test traffic has a time-to-live (TTL) of 2 and it will never be forwarded beyond the downstream router(s).
   - When test traffic reaches node 3, a TTL expired response is sent back to node 2. If the response packet arrives over the expected interface (**top** ECMP link) then the forwarding verification on node 2 for the first iteration towards node 9 is considered to be a success.
   - The difference between the test traffic for test iteration A and B in this example is the destination_ip of the MPLS OAM ping. Node 2 calculates them in this order to exercise a given ECMP path (if present). Thus, test traffic for iteration A is hashed onto the **top** ECMP and test traffic for iteration B is hashed onto the **bottom** ECMP link.
3. The DPM tests are then repeated for the remaining prefix-SIDs in the network

# Configure SR DPM

To configure SR-DPM, complete the following configurations:

- Enable SR DPM
- Configure SR DPM interval timer
- Configure SR DPM rate limit

### Enable SR DPM

Use the **mpls oam dpm** command to enable SR DPM and enter MPLS OAM DPM command mode.

```
Router(config)# mpls oam dpm
Router(config-oam-dpm)#
```

### Configure SR DPM Interval Timer

Use the **interval** *minutes* command in MPLS OAM DPM command mode to specify how often to run DPM scan. The range is from 1 to 3600 minutes. The default is 30 minutes.

```
Router(config-oam-dpm)# interval 240
Router(config-oam-dpm#
```

### Configure SR DPM Rate Limit

Use the **pps** *pps* command in MPLS OAM DPM command mode to rate limit the number of echo request packets per second (PPS) generated by DPM. The range is from 1 to 250 PPS. The default is 50 PPS.

**Note** If the specified rate limit is more than the rate limit for overall MPLS OAM requests, DPM generates an error message.

```
Router(config-oam-dpm)# pps 45
Router(config-oam-dpm#
```

### Verification

```
Router# show mpls oam dpm summary
  Displays the overall status of SR-DPM from the last run.
Router# show mpls oam dpm adjacency summary
  Displays the result of DPM adjacency SID verification for all local interfaces from the
last run.
Router# show mpls oam dpm adjacency interface
  Displays the result of DPM adjacency SID verification for all adjacencies for the specified
 local interface.
Router# show mpls oam dpm counters
  Outputs various counters for DPM from last run as well as since the start of DPM process.
Router# show mpls oam dpm prefix summary
  Displays the result of DPM prefix SID verification for all reachable IGP prefix SIDs from
 the last run.
Router# show mpls oam dpm prefix prefix
  Displays the result of DPM prefix SID verification for the specified prefix including all
 upstream and downstream combinations.
Router# show mpls oam dpm trace
  Returns logged traces for DPM.
```

In addition, the existing **show mpls oam** command is extended to specify DPM counters.

```
Router# show mpls oam counters packet dpm
```