# Interface and Hardware Component Configuration Guide for Cisco ASR 9000 Series Routers, IOS XR Release 6.6.x

**First Published:** 2018-12-21

**Last Modified:** 2019-04-30

**Americas Headquarters**
Cisco Systems, Inc.
170 West Tasman Drive
San Jose, CA 95134-1706
USA
http://www.cisco.com
Tel: 408 526-4000
800 553-NETS (6387)
Fax: 408 527-0883

THE SPECIFICATIONS AND INFORMATION REGARDING THE PRODUCTS IN THIS MANUAL ARE SUBJECT TO CHANGE WITHOUT NOTICE. ALL STATEMENTS, INFORMATION, AND RECOMMENDATIONS IN THIS MANUAL ARE BELIEVED TO BE ACCURATE BUT ARE PRESENTED WITHOUT WARRANTY OF ANY KIND, EXPRESS OR IMPLIED. USERS MUST TAKE FULL RESPONSIBILITY FOR THEIR APPLICATION OF ANY PRODUCTS.

THE SOFTWARE LICENSE AND LIMITED WARRANTY FOR THE ACCOMPANYING PRODUCT ARE SET FORTH IN THE INFORMATION PACKET THAT SHIPPED WITH THE PRODUCT AND ARE INCORPORATED HEREIN BY THIS REFERENCE. IF YOU ARE UNABLE TO LOCATE THE SOFTWARE LICENSE OR LIMITED WARRANTY, CONTACT YOUR CISCO REPRESENTATIVE FOR A COPY.

The Cisco implementation of TCP header compression is an adaptation of a program developed by the University of California, Berkeley (UCB) as part of UCB's public domain version of the UNIX operating system. All rights reserved. Copyright © 1981, Regents of the University of California.

NOTWITHSTANDING ANY OTHER WARRANTY HEREIN, ALL DOCUMENT FILES AND SOFTWARE OF THESE SUPPLIERS ARE PROVIDED “AS IS" WITH ALL FAULTS. CISCO AND THE ABOVE-NAMED SUPPLIERS DISCLAIM ALL WARRANTIES, EXPRESSED OR IMPLIED, INCLUDING, WITHOUT LIMITATION, THOSE OF MERCHANTABILITY, FITNESS FOR A PARTICULAR PURPOSE AND NONINFRINGEMENT OR ARISING FROM A COURSE OF DEALING, USAGE, OR TRADE PRACTICE.

IN NO EVENT SHALL CISCO OR ITS SUPPLIERS BE LIABLE FOR ANY INDIRECT, SPECIAL, CONSEQUENTIAL, OR INCIDENTAL DAMAGES, INCLUDING, WITHOUT LIMITATION, LOST PROFITS OR LOSS OR DAMAGE TO DATA ARISING OUT OF THE USE OR INABILITY TO USE THIS MANUAL, EVEN IF CISCO OR ITS SUPPLIERS HAVE BEEN ADVISED OF THE POSSIBILITY OF SUCH DAMAGES.

Any Internet Protocol (IP) addresses and phone numbers used in this document are not intended to be actual addresses and phone numbers. Any examples, command display output, network topology diagrams, and other figures included in the document are shown for illustrative purposes only. Any use of actual IP addresses or phone numbers in illustrative content is unintentional and coincidental.

All printed copies and duplicate soft copies of this document are considered uncontrolled. See the current online version for the latest version.

Cisco has more than 200 offices worldwide. Addresses and phone numbers are listed on the Cisco website at www.cisco.com/go/offices.

The documentation set for this product strives to use bias-free language. For purposes of this documentation set, bias-free is defined as language that does not imply discrimination based on age, disability, gender, racial identity, ethnic identity, sexual orientation, socioeconomic status, and intersectionality. Exceptions may be present in the documentation due to language that is hardcoded in the user interfaces of the product software, language used based on standards documentation, or language that is used by a referenced third-party product.

Cisco and the Cisco logo are trademarks or registered trademarks of Cisco and/or its affiliates in the U.S. and other countries. To view a list of Cisco trademarks, go to this URL: https://www.cisco.com/c/en/us/about/legal/trademarks.html. Third-party trademarks mentioned are the property of their respective owners. The use of the word partner does not imply a partnership relationship between Cisco and any other company. (1721R)

© 2018 Cisco Systems, Inc. All rights reserved.

# CONTENTS


PREFACE

**Preface** xxix

Changes to This Document xxix

Obtaining Documentation and Submitting a Service Request xxix

CHAPTER 1

**New and Changed Interface and Hardware Component Features** 1

Interface and Hardware Component Features Added or Modified in IOS XR Release 6.6.x 1

CHAPTER 2

**Preconfiguring Physical Interfaces** 3

Preconfiguring Physical Interfaces 4

Prerequisites for Preconfiguring Physical Interfaces 5

Information About Preconfiguring Physical Interfaces 5

Physical Interface Preconfiguration Overview 5

Benefits of Interface Preconfiguration 6

Use of the Interface Preconfigure Command 6

Active and Standby RSPs and Virtual Interface Configuration 6

How to Preconfigure Physical Interfaces 7

Configuration Examples for Preconfiguring Physical Interfaces 8

Preconfiguring an Interface: Example 9

CHAPTER 3

**Configuring ATM Interfaces** 11

Configuring ATM Interfaces 11

Prerequisites for Implementing ATM 12

Information About ATM 12

VC-Class Mapping 13

VP-Tunnels 14

F5 OAM on ATM Interfaces 14

ILMI on ATM Interfaces 14
Layer 2 VPN on ATM Interfaces 15
Cell Packing on L2VPN ACs with AAL0 Mode Encapsulation 16
Circuit Emulation over Packet on the Cisco 2-Port Channelized T3/E3 ATM and Circuit Emulation Shared Port Adapter 16
Features Supported in CEoP 17
ATM Layer 2 QoS 17
Features 18
Matching 18
Marking 19
Policing 19
Hierarchical Policy Maps 20
Configuring ATM Interfaces 21
Bringing Up an ATM Interface 21
Configuring Optional ATM Interface Parameters 23
How to Create and Configure a Point-to-Point ATM Subinterface with a PVC 25
Creating a Point-to-Point ATM Subinterface with a PVC 25
Configuring Optional Point-to-Point ATM PVC Parameters 27
How to Create and Configure a VP-Tunnel 30
Creating and Configuring a VP-Tunnel on an ATM Interface 30
Creating and Configuring Subinterfaces with PVCs on a VP-tunnel 33
How to Configure a Layer 2 Attachment Circuit 35
Creating a Layer 2 Port Mode AC 36
Configuring Optional Parameters on a Layer 2 Port Mode AC 37
Creating an ATM Layer 2 Subinterface with a PVC 39
Configuring Optional ATM Layer 2 PVC Parameters 41
Creating an ATM Layer 2 Subinterface with a PVP 43
Configuring Optional ATM Layer 2 PVP Parameters 45
How to Create and Configure a VC-Class 47
Creating and Configuring a VC-Class 47
Attaching a VC-Class to a Point-to-Point ATM Main Interface 49
Attaching a VC-Class to a Point-to-Point ATM Subinterface 50
Attaching a VC-Class to a PVC on an ATM Subinterface 52
How to Configure ILMI on ATM Interfaces 53

Enabling ILMI on an ATM Interface 53
Disabling ILMI on an ATM Interface 55
How to Configure Channelized ATM 57
Attaching a Service-Policy to an Attachment Circuit 62
ATM Configuration: Examples 65
ATM Interface Bring Up and Configuration: Example 65
Point-To-Point ATM Subinterface Configuration: Example 65
Layer 2 AC Creation and Configuration: Example 67
VC-Class Creation and Configuration: Example 68
Channelized ATM Configuration: Example 69
Clear Channel ATM with Virtual Path (VP) Tunnels Configuration: Example 69
ATM Layer 2 QoS Configuration: Examples 70
Attaching a Service-Policy to an Attachment Circuit Configuration: Example 70
Policy Map Configuration for CBR/UBR: Example 70
Policy Map Configuration for VBR.1: Example 71
Policy Map Configuration for VBR.2 and VBR.3: Example 71
Policy Map Configuration to Exclude OAM Cells: Example 71
Policy Map Configuration for Dual Queue Limit: Example 72
Verifying ATM Layer 2 QoS Configuration: Examples 72

CHAPTER 4 **Advanced Configuration and Modification of the Management Ethernet Interface** 75
Advanced Configuration and Modification of the Management Ethernet Interface 76
Prerequisites for Configuring Management Ethernet Interfaces 77
Information About Configuring Management Ethernet Interfaces 77
Default Interface Settings 77
How to Perform Advanced Management Ethernet Interface Configuration 78
Configuring a Management Ethernet Interface 78
IPv6 Stateless Address Auto Configuration on Management Interface 80
Configuring the Duplex Mode for a Management Ethernet Interface 82
Configuring the Speed for a Management Ethernet Interface 83
Modifying the MAC Address for a Management Ethernet Interface 84
Verifying Management Ethernet Interface Configuration 85
Configuration Examples for Management Ethernet Interfaces 86
Configuring a Management Ethernet Interface: Example 86

CHAPTER 5 **Configuring Ethernet Interfaces** 89

Configuring Ethernet Interfaces 91

Prerequisites for Configuring Ethernet Interfaces 93

Information About Configuring Ethernet 94

16-Port 10-Gigabit Ethernet SFP+ Line Card 94

Features 94

Cisco ASR 9000 Modular Line Cards 95

Restrictions on Module Port Adaptors 95

Default Configuration Values for Gigabit Ethernet and 10-Gigabit Ethernet 96

Default Configuration Values for Fast Ethernet 96

Layer 2 VPN on Ethernet Interfaces 97

Gigabit Ethernet Protocol Standards Overview 98

IEEE 802.3 Physical Ethernet Infrastructure 99

IEEE 802.3ab 1000BASE-T Gigabit Ethernet 99

IEEE 802.3z 1000 Mbps Gigabit Ethernet 99

IEEE 802.3ae 10 Gbps Ethernet 99

IEEE 802.3ba 100 Gbps Ethernet 99

MAC Address 99

MAC Accounting 99

Ethernet MTU 100

Flow Control on Ethernet Interfaces 100

802.1Q VLAN 101

VRRP 101

HSRP 101

Link Autonegotiation on Ethernet Interfaces 102

Fast Polling for WAN-PHY 102

Early Indication of Link Loss Change 103

Subinterfaces on the Cisco ASR 9000 Series Router 103

Layer 2, Layer 3, and EFP's 106

Enhanced Performance Monitoring for Layer 2 Subinterfaces (EFPs) 108

Other Performance Management Enhancements 109

Frequency Synchronization and SyncE 109

LLDP 110

LLDP Frame Format 110
LLDP TLV Format 110
LLDP Operation 111
Supported LLDP Functions 111
Unsupported LLDP Functions 112
Enabling LLDP Per Interface 112
Unidirectional Link Routing 114
How to Configure Ethernet 114
Configuring Ethernet Interfaces 114
Configuring Gigabit Ethernet Interfaces 114
Configuring a Fast Ethernet Interface 117
Configuring MAC Accounting on an Ethernet Interface 118
Configuring a L2VPN Ethernet Port 119
Configuring LLDP 121
LLDP Default Configuration 121
Enabling LLDP Globally 122
Configuring Global LLDP Operational Characteristics 123
Disabling Transmission of Optional LLDP TLVs 124
Disabling LLDP Receive and Transmit Operation for an Interface 125
Verifying the LLDP Configuration 127
Verifying the LLDP Global Configuration 127
Verifying the LLDP Interface Configuration 127
Configuring UDLR 128
Configuring the Dual-Rate Line Cards 129
Creating Slices on a Router 130
Overview 130
Slice and Port Numbering 131
Configure Slices 132
Configuration Examples for Ethernet 135
Configuring an Ethernet Interface: Example 135
Configuring MAC-Accounting: Example 136
Configuring a Layer 2 VPN AC: Example 136
Configuring LLDP: Examples 136

CHAPTER 6 **Configuring Ethernet OAM** 139

Prerequisites for Configuring Ethernet OAM 141

Information About Configuring Ethernet OAM 142

Ethernet Link OAM 142

Neighbor Discovery 142

Link Monitoring 142

MIB Retrieval 143

Miswiring Detection (Cisco-Proprietary) 143

Remote Loopback 143

SNMP Traps 143

Unidirectional Link Fault Detection 143

Ethernet CFM 143

Maintenance Domains 144

Services 146

Maintenance Points 146

MIP Creation 147

MEP and CFM Processing Overview 147

CFM Protocol Messages 149

Continuity Check (IEEE 802.1ag and ITU-T Y.1731) 149

Loopback (IEEE 802.1ag and ITU-T Y.1731) 151

Linktrace (IEEE 802.1ag and ITU-T Y.1731) 152

Exploratory Linktrace (Cisco) 153

Delay and Jitter Measurement (ITU-T Y.1731) 154

Synthetic Loss Measurement (ITU-T Y.1731) 155

Loss Measurement (ITU-T Y.1731) 155

MEP Cross-Check 155

Configurable Logging 155

EFD 156

Flexible VLAN Tagging for CFM 157

CFM on MC-LAG 158

RG-Level CFM 158

POA-Level CFM 159

Supported Features for CFM on MC-LAG 159

Restrictions for CFM on MC-LAG 160
CFM Software Acceleration 160
Ethernet SLA 161
Y.1731 Performance Monitoring 161
Loss Measurement Terminology 163
Loss Measurement Performance Attributes 163
Limitations of Data Loss Measurement 163
Ethernet SLA Concepts 164
Loss Measurement Terminology 164
Ethernet SLA Measurement Packet 164
Ethernet SLA Sample 165
Ethernet SLA Probe 165
Ethernet SLA Burst 166
Ethernet SLA Schedule 166
Ethernet SLA Bucket 166
Ethernet SLA Aggregation Bin 166
Ethernet SLA Operation Profile 166
Ethernet SLA Operation 167
Ethernet SLA On-Demand Operation 167
Statistics Measurement and Ethernet SLA Operations Overview 167
Configuration Overview of Scheduled Ethernet SLA Operations 168
Ethernet LMI 168
E-LMI Messaging 169
Cisco-Proprietary Remote UNI Details Information Element 170
E-LMI Operation 170
Supported E-LMI PE Functions on the Cisco ASR 9000 Series Router 170
Unsupported E-LMI Functions 171
Unidirectional Link Detection Protocol 171
UDLD Operation 171
Types of Fault Detection 172
UDLD Modes of Operation 172
UDLD Aging Mechanism 172
State Machines 173
Main FSM 173

Detection FSM 173
Ethernet Data Plane Loopback 174
Features Supported for Ethernet Data Plane Loopback 174
Limitations of Ethernet Data Plane Loopback 174
Configuring Ethernet Data Plane Loopback 175
Ethernet Data Plane Loopback on Satellite nV System 176
How to Configure Ethernet OAM 177
Configuring Ethernet Link OAM 177
Configuring an Ethernet OAM Profile 177
Attaching an Ethernet OAM Profile to an Interface 184
Configuring Ethernet OAM at an Interface and Overriding the Profile Configuration 185
Verifying the Ethernet OAM Configuration 186
Configuring Ethernet CFM 187
Configuring a CFM Maintenance Domain 187
Configuring Services for a CFM Maintenance Domain 188
Enabling and Configuring Continuity Check for a CFM Service 190
Configuring Automatic MIP Creation for a CFM Service 192
Configuring Cross-Check on a MEP for a CFM Service 194
Configuring Other Options for a CFM Service 195
Configuring CFM MEPs 197
Configuring Y.1731 AIS 200
Configuring AIS in a CFM Domain Service 200
Configuring AIS on a CFM Interface 202
Configuring EFD for a CFM Service 203
Verifying the EFD Configuration 205
Configuring Flexible VLAN Tagging for CFM 205
Verifying the CFM Configuration 206
Troubleshooting Tips 206
Configuring Ethernet SLA 208
Ethernet SLA Configuration Guidelines 208
Configuring an SLA Operation Profile 208
Configuring a Schedule for an SLA Operation Probe in a Profile 210
Configuring SLA Probe Parameters in a Profile 211
Configuring SLA Statistics Measurement in a Profile 213

Configuring an SLA Operation 215
Configuring an On-Demand SLA Operation 216
Configuration Guidelines 216
Configuring an On-Demand Ethernet SLA Operation for CFM Delay Measurement 217
Configuring an On-Demand Ethernet SLA Operation for CFM Loopback 218
Configuring an On-Demand Ethernet SLA Operation for CFM Synthetic Loss Measurement 218
Verifying SLA Configuration 219
Configuring Ethernet LMI 219
Prerequisites for Configuring E-LMI 219
Restrictions for Configuring E-LMI 220
Creating EVCs for E-LMI 220
Configuring EFPs 220
Configuring a Bridge Group and Assigning EFPs to a Bridge Domain 221
Configuring Ethernet CFM for E-LMI 223
Configuring Ethernet CFM 223
Configuring EFPs as CFM Up MEPs 223
Configuring UNI Names on the Physical Interface 224
Enabling E-LMI on the Physical Interface 226
Configuring the Polling Verification Timer 227
Configuring the Status Counter 228
Disabling Syslog Messages for E-LMI Errors or Events 230
Disabling Use of the Cisco-Proprietary Remote UNI Details Information Element 231
Verifying the Ethernet LMI Configuration 233
Troubleshooting Tips for E-LMI Configuration 233
Ethernet LMI Link Status Troubleshooting 233
Ethernet LMI Line Protocol State Troubleshooting 234
Ethernet LMI Error Counter Troubleshooting 234
Ethernet LMI Remote UNI Troubleshooting 235
Configuring UDLD 235
Configuration Examples for Ethernet OAM 237
Configuration Examples for EOAM Interfaces 237
Configuring an Ethernet OAM Profile Globally: Example 237
Configuring Ethernet OAM Features on an Individual Interface: Example 237

Configuring Ethernet OAM Features to Override the Profile on an Individual Interface: Example 238
Configuring a Remote Loopback on an Ethernet OAM Peer: Example 238
Clearing Ethernet OAM Statistics on an Interface: Example 239
Enabling SNMP Server Traps on a Router: Example 239
Configuration Examples for Ethernet CFM 239
Ethernet CFM Domain Configuration: Example 239
Ethernet CFM Service Configuration: Example 239
Flexible Tagging for an Ethernet CFM Service Configuration: Example 239
Continuity Check for an Ethernet CFM Service Configuration: Example 240
MIP Creation for an Ethernet CFM Service Configuration: Example 240
Cross-check for an Ethernet CFM Service Configuration: Example 240
Other Ethernet CFM Service Parameter Configuration: Example 240
MEP Configuration: Example 240
Ethernet CFM Show Command: Examples 240
AIS for CFM Configuration: Examples 244
AIS for CFM Show Commands: Examples 245
show ethernet cfm interfaces ais Command: Example 245
show ethernet cfm local meps Command: Examples 245
EFD Configuration: Examples 247
Displaying EFD Information: Examples 248
show efd interfaces Command: Example 248
show ethernet cfm local meps detail Command: Example 248
Configuration Examples for Ethernet SLA 249
Ethernet SLA Profile Type Configuration: Examples 249
Ethernet SLA Probe Configuration: Examples 249
Profile Statistics Measurement Configuration: Examples 250
Scheduled SLA Operation Probe Configuration: Examples 251
Ethernet SLA Operation Probe Scheduling and Aggregation Configuration: Example 251
Ongoing Ethernet SLA Operation Configuration: Example 252
On-Demand Ethernet SLA Operation Basic Configuration: Examples 253
Ethernet SLA Y.1731 SLM Configuration: Examples 253
Ethernet SLA Show Commands: Examples 254
Configuration Example for Ethernet LMI 257

Configuration Examples for Ethernet Data Plane Loopback 259
Verification 259

CHAPTER 7 **Configuring Integrated Routing and Bridging** 261
Prerequisites for Configuring IRB 263
Restrictions for Configuring IRB 263
Information About Configuring IRB 265
IRB Introduction 265
Bridge-Group Virtual Interface 266
Bridge-Group Virtual Interface 266
Supported Features on a BVI 266
BVI MAC Address 267
BVI Interface and Line Protocol States 267
Packet Flows Using IRB 267
Packet Flows When Host A Sends to Host B on the Bridge Domain 268
Packet Flows When Host A Sends to Host C From the Bridge Domain to a Routed Interface 268
Packet Flows When Host C Sends to Host B From a Routed Interface to the Bridge Domain 269
Supported Environments for IRB 269
Additional IPv4-Specific Environments Supported for IRB 270
Additional IPv6-Specific Environments Supported for IRB 270
How to Configure IRB 271
Configuring the Bridge Group Virtual Interface 271
Configuration Guidelines 271
Configuring the Layer 2 AC Interfaces 273
Configuring a Bridge Group and Assigning Interfaces to a Bridge Domain 275
Associating the BVI as the Routed Interface on a Bridge Domain 276
Displaying Information About a BVI 278
Configuration Examples for IRB 278
Basic IRB Configuration: Example 278
IRB Using ACs With VLANs: Example 278
IPv4 Addressing on a BVI Supporting Multiple IP Networks: Example 279
Comprehensive IRB Configuration with BVI Bundle Interfaces and Multicast Configuration: Example 279
IRB With BVI and VRRP Configuration: Example 281

6PE/6VPE With BVI Configuration: Example 281

CHAPTER 8 **Configuring Link Bundling** 285

Prerequisites for Configuring Link Bundling 287

Prerequisites for Configuring Link Bundling on a Cisco ASR 9000 Series Router 287

Information About Configuring Link Bundling 287

Link Bundling Overview 288

Features and Compatible Characteristics of Ethernet Link Bundles 288

Characteristics of POS Link Bundles in Cisco ASR 9000 Series Router 290

Restrictions of POS Link Bundles in Cisco ASR 9000 Series Router 290

Link Aggregation Through LACP 291

IEEE 802.3ad Standard 291

Multichassis Link Aggregation 292

Failure Cases 292

Interchassis Communication Protocol 293

Access Network Redundancy Model 293

ICCP Based Service Multihoming 294

ICCP-SM Redundancy Group 295

Advantages of Pseudo mLACP: 295

Failure Modes 296

Core Network Redundancy Model 296

One-way Pseudowire Redundancy 296

Two-way Pseudowire Redundancy 297

Switchovers 297

Dynamic Priority Management 297

Brute Force Behavior 298

MC-LAG Topologies 298

LACP Short Period Time Intervals 299

Load Balancing 299

Layer 2 Ingress Load Balancing on Link Bundles 300

Layer 3 Egress Load Balancing on Link Bundles 301

Layer 3 Load Balancing Before Cisco IOS XR Release 4.0.1 301

Layer 3 Load Balancing Beginning in Cisco IOS XR Release 4.0.1 301

Dynamic Load Balancing for LAG 302

QoS and Link Bundling 302
VLANs on an Ethernet Link Bundle 302
Link Bundle Configuration Overview 303
Nonstop Forwarding During Card Failover 303
Link Failover 303
Multi-Gigabit Service Control Point 304
How to Configure Link Bundling 304
Configuring Ethernet Link Bundles 304
Configuring EFP Load Balancing on an Ethernet Link Bundle 308
Configuring VLAN Bundles 310
311
Configuring POS Link Bundles 314
Configuring Multichassis Link Aggregation 317
Configuring Interchassis Communication Protocol 317
Configuring Multichassis Link Aggregation Control Protocol Session 319
Configuring Multichassis Link Aggregation Control Protocol Bundle 321
Configuring Dual-Homed Device 322
Configuring One-way Pseudowire Redundancy in MC-LAG 324
Configuring VPWS Cross-Connects in MC-LAG 326
Configuring ICCP based Service Homing 328
Configuring VPLS in MC-LAG 330
How to Configure MGSCP 332
Prerequisites for Configuring MGSCP 332
Restrictions for Configuring MGSCP 333
Configuring the Access Bundle for the Subscriber-Facing Side 333
Configuring the Network Bundle for the Core-Facing Side 335
Configuring the Bundle Member Interfaces 337
Configuring VRFs to Route Traffic to the Bundles 339
Configuring VRFs with Static Routing 339
Configuring VRFs with Dynamic Routing 339
Configuration Examples for Link Bundling 340
Example: Configuring an Ethernet Link Bundle 340
Example: Configuring a VLAN Link Bundle 342
Example: Configuring a POS Link Bundle 342

Example: Configuring EFP Load Balancing on an Ethernet Link Bundle 343
Example: Configuring Multichassis Link Aggregation 343
Configuration Examples for MGSCP 347
Example: Configuring Bundle Interfaces and Member Links 348
Examples: Configuring VRFs to Route Traffic to the Bundles 349
Example: Configuring VRFs with Static Routing 349
Example: Configuring VRFs with OSPF Routing 350
Example: Configuring MGSCP with ABF to Route Traffic to the Bundles 351

CHAPTER 9 **Configuring Traffic Mirroring** 353
Introduction to Traffic Mirroring 353
Sampled Traffic Mirroring 355
Implementing Traffic Mirroring on the Cisco ASR 9000 Series Router 355
Traffic Mirroring Terminology 355
Characteristics of the Source Port 356
Characteristics of the Monitor Session 356
Characteristics of the Destination Port 357
Supported Traffic Mirroring Types 358
Pseudowire Traffic Mirroring 358
ACL-Based Traffic Mirroring 359
Restrictions for Traffic Mirroring 359
Restrictions of Sampled Traffic Mirroring 360
Performance Impact with Traffic Mirroring 360
Configuring Traffic Mirroring 360
How to Configure Local Traffic Mirroring 360
How to Configure Remote Traffic Mirroring 362
How to Configure Traffic Mirroring over Pseudowire 365
How to Configure ACL-Based Traffic Mirroring 368
Troubleshooting ACL-Based Traffic Mirroring 371
How to Configure Partial Packet Mirroring 371
Traffic Mirroring Configuration Examples 373
Traffic Mirroring with Physical Interfaces (Local): Example 373
Traffic Mirroring with EFPs (Remote): Example 374
Viewing Monitor Session Status: Example 374

Monitor Session Statistics: Example 375
Traffic Mirroring over Pseudowire: Example 376
Layer 3 ACL-Based Traffic Mirroring: Example 376
Layer 2 ACL-Based Traffic Mirroring: Example 376
Partial Packet Mirroring: Example 377
Sampled Traffic Mirroring: Example 377
Troubleshooting Traffic Mirroring 378

CHAPTER 10 **Configuring Virtual Loopback and Null Interfaces** 383
Prerequisites for Configuring Virtual Interfaces 383
Information About Configuring Virtual Interfaces 383
Virtual Loopback Interface Overview 384
Null Interface Overview 384
Virtual Management Interface Overview 384
Active and Standby RPs and Virtual Interface Configuration 385
How to Configure Virtual Interfaces 385
Configuring Virtual Loopback Interfaces 385
Configuring Null Interfaces 387
Configuring Virtual IPv4 Interfaces 388
Configuration Examples for Virtual Interfaces 389
Configuring a Loopback Interface: Example 389
Configuring a Null Interface: Example 389
Configuring a Virtual IPv4 Interface: Example 390

CHAPTER 11 **Configuring Channelized SONET/SDH** 391
Configuring Channelized SONET/SDH 391
Prerequisites for Configuring Channelized SONET/SDH 392
Information About Configuring Channelized SONET/SDH 392
Channelized SONET Overview 393
Channelized SDH Overview 398
Default Configuration Values for Channelized SONET/SDH 402
How to Configure Channelized SONET/SDH 403
Configuring SONET T3 and VT1.5-Mapped T1 Channels 403
Configuring Packet over SONET Channels 408

Configuring a Clear Channel SONET Controller for T3 411
Configuring Channelized SONET APS 415
Configuring SDH AU-3 417
Configuring SDH AU-3 Mapped to C11-T1 or C12-E1 418
Configuring SDH AU-3 Mapped to T3 or E3 422
Configuring SDH AU-4 425
Configuration Examples for Channelized SONET 431
Channelized SONET Examples 431
Channelized SONET T3 to T1 Configuration: Example 431
Channelized SONET in VT1.5 Mode and T1 Channelization to NxDS0 432
Channelized Packet over SONET Configuration: Example 432
SONET Clear Channel T3 Configuration: Example 432
Channelized SONET APS Multirouter Configuration: Example 433
Channelized SDH Examples 433
Channelized SDH AU-3 Configuration: Examples 433
Channelized SDH AU-3 to VC-3 and Clear Channel T3/E3: Examples 433
Channelized SDH AU-3 to TUG-2, VC-11, T1 and NxDS0s: Example 434
Channelized SDH AU-3 to TUG-2, VC-12, E1 and NxDS0s: Example 434
Channelized SDH AU-4 Configuration: Examples 435
Channelized SDH AU-4 to TUG-3 and Clear Channel T3/E3: Examples 435
Channelized SDH AU-4 to TUG-3, TUG-2, and T1/E1 and NxDS0: Examples 435

CHAPTER 12 **Configuring Circuit Emulation over Packet** 439
Configuring Circuit Emulation over Packet 440
Prerequisites for Configuration 440
Overview of Circuit Emulation over Packet Service 441
Information About Configuring CEoP Channelized SONET/SDH 442
Channelized SONET and SDH Overview 442
Default Configuration Values for Channelized SONET/SDH 446
Clock Distribution 446
How to implement CEM 448
Configuring SONET VT1.5-Mapped T1 Channels and Creating CEM Interface 448
Configuring SDH AU-3 Mapped to C11-T1 or C12-E1 451
Configuring SDH AU-3 Mapped to C11-T1 and Creating CEM Interface 451

Configuring SDH AU-3 Mapped to C12-E1 and Creating CEM Interface 454
Configuring the Cisco 24-Port Channelized T1/E1 Circuit Emulation and Channelized ATM SPA and Creating CEM Interface 457
Configuring the Cisco 2-Port Channelized T3/E3 Circuit Emulation and Channelized ATM SPA and Creating CEM Interface 459
T3/E3 Channelization Mode 459
T1/E1 Channelization Mode 461
Configuring CEM Interface 463
Configuration Guidelines and Restrictions 463
Configuring a Global CEM Class 464
Attaching a CEM Class 465
Configuring Payload Size 467
Setting the Dejitter Buffer Size 467
Setting an Idle Pattern 468
Enabling Dummy Mode 468
Setting a Dummy Pattern 468
Configuring Clocking 470
Configuring Clock Recovery 470
Adaptive Clock Recovery 470
Differential Clocking 471
Verifying Clock recovery 472
Show Commands for CEM 472
Ouput of show controller cem forward interface instance command 472
Configuration Examples for CEM 473
Circuit Emulation Interface Configuration: Examples 473
Channelized Sonet / SDH Configurations and CEM Interface Creation 473
Sonet - T1 Channelization and CEM Interface Creation 473
SDH - T1 Channelization and CEM Interface Creation 473
SDH - E1 Channelization and CEM Interface Creation 474
CEM Interface Configuration 474
SAToP CEM interface creation on T3 / E3 on Cisco 2-Port Channelized T3/E3 Circuit Emulation and Channelized ATM SPA 475
SAToP CEM interface creation on T1 / E1 on Cisco 2-Port Channelized T3/E3 Circuit Emulation and Channelized ATM SPA 475

CESoPSN CEM interface creation on T1/E1 on Cisco 2-Port Channelized T3/E3 Circuit Emulation and Channelized ATM SPA 475
SAToP CEM interface creation on T1 / E1 on Cisco 24-Port Channelized T1/E1 Circuit Emulation and Channelized ATM SPA 476
CESoPSN CEM interface creation on T1 / E1 on Cisco 24-Port Channelized T1/E1 Circuit Emulation and Channelized ATM SPA 476
Clock Recovery: Example 476
Adaptive Clock Recovery Configuration: 476
Differential Clock Recovery Configuration: 477

CHAPTER 13 **Configuring Clear Channel SONET Controllers** 479
Prerequisites for Configuring Clear Channel SONET Controllers 480
Information About Configuring SONET Controllers 480
SONET Controller Overview 480
Default Configuration Values for SONET Controllers 481
SONET APS 482
How to Configure Clear Channel SONET Controllers 482
Configuring a Clear Channel SONET Controller 482
Configuring SONET APS 486
Configuring a Hold-off Timer to Prevent Fast Reroute from Being Triggered 491
Configuration Examples for SONET Controllers 492
SONET Controller Configuration: Example 492
SONET APS Group Configuration: Example 493

CHAPTER 14 **Configuring Clear Channel T3/E3 Controllers and Channelized T3 and T1/E1 Controllers** 495
Prerequisites for Configuring T3/E3 Controllers 496
Information About T3/E3 Controllers and Serial Interfaces 497
Loopback Support 501
Configuration Overview 503
Default Configuration Values for T3 and E3 Controllers 504
Default Configuration Values for T1 and E1 Controllers 504
Link Noise Monitoring on T1 or E1 Links 505
LNM Events 506
LNM Logging 506

How to Configure Clear Channel T3/E3 Controllers and Channelized T1/E1 Controllers 507
Configuring a Clear Channel E3 Controller 507
Modifying the Default E3 Controller Configuration 509
Configuring a Clear Channel T3 Controller 511
Configuring a Channelized T3 Controller 513
Modifying the Default T3 Controller Configuration 515
Configuring a T1 Controller 518
Configuring an E1 Controller 521
Configuring BERT 525
Configuring BERT on T3/E3 and T1/E1 Controllers 525
Configuring BERT on a DS0 Channel Group 528
Configuring Link Noise Monitoring on a T1 or E1 Channel 531
Verifying Link Noise Monitoring Configuration and Status 533
Clearing Link Noise Monitoring States and Statistics 534
Configuration Examples 534
Configuring a Clear Channel T3 Controller: Example 534
Configuring a T3 Controller with Channelized T1 Controllers: Example 535
Configuring BERT on a T3 Controller: Example 536
Configuring Link Noise Monitoring on a T1 Controller: Examples 537
QoS on T3 Channels: Example 538

CHAPTER 15 **Configuring Dense Wavelength Division Multiplexing Controllers** 539
Configuring Dense Wavelength Division Multiplexing Controllers 540
Prerequisites for Configuring DWDM Controller Interfaces 541
Information About the DWDM Controllers 541
CFP2 DCO Optics Version Compatibility 542
Information about IPoDWDM 543
How to Configure DWDM Controllers 544
Configuring the Optical Parameters 545
Troubleshooting Tips 547
Configuring G.709 Parameters 547
How to Perform Performance Monitoring on DWDM Controllers 550
Configuring DWDM Controller Performance Monitoring 550
Configuring IPoDWDM 554

Configuring the Optical Layer DWDM Ports 554
Configuring the Administrative State of DWDM Optical Ports 555
Configuring Proactive FEC-FRR Triggering 557
Configuration Examples 559
Turning On the Laser: Example 559
Turning Off the Laser: Example 559
DWDM Controller Configuration: Examples 559
DWDM Performance Monitoring: Examples 560
IPoDWDM Configuration: Examples 560
Optical Layer DWDM Port Configuration: Examples 560
Administrative State of DWDM Optical Ports Configuration: Examples 561
Proactive FEC-FRR Triggering Configuration: Examples 561

CHAPTER 16 **Configuring POS Interfaces** 563
Prerequisites for Configuring POS Interfaces 564
Information About Configuring POS Interfaces 564
Default Settings for POS Interfaces 564
Cisco HDLC Encapsulation 565
PPP Encapsulation 565
Keepalive Timer 566
Frame Relay Encapsulation 567
LMI on Frame Relay Interfaces 568
How to Configure a POS Interface 569
Bringing Up a POS Interface 569
Configuring Optional POS Interface Parameters 571
Creating a Point-to-Point POS Subinterface with a PVC 573
Configuring Optional PVC Parameters 576
Modifying the Keepalive Interval on POS Interfaces 578
How to Configure a Layer 2 Attachment Circuit 580
Creating a Layer 2 Frame Relay Subinterface with a PVC 580
Configuring Optional Layer 2 PVC Parameters 582
Configuring Optional Layer 2 Subinterface Parameters 584
Configuration Examples for POS Interfaces 586
Bringing Up and Configuring a POS Interface with Cisco HDLC Encapsulation: Example 586

Configuring a POS Interface with Frame Relay Encapsulation: Example 586
Configuring a POS Interface with PPP Encapsulation: Example 588

CHAPTER 17 **Configuring Serial Interfaces** 591
Prerequisites for Configuring Serial Interfaces 592
Information About Configuring Serial Interfaces 593
High-Level Overview: Serial Interface Configuration on Channelized SPAs 593
Cisco HDLC Encapsulation 595
PPP Encapsulation 595
Multilink PPP 596
Keepalive Timer 597
Frame Relay Encapsulation 597
LMI on Frame Relay Interfaces 598
Default Settings for Serial Interface Configurations 599
Serial Interface Naming Notation 599
IPHC Overview 600
QoS and IPHC 602
How to Configure Serial Interfaces 602
Bringing Up a Serial Interface 602
Configuring Optional Serial Interface Parameters 605
Creating a Point-to-Point Serial Subinterface with a PVC 608
Configuring Optional PVC Parameters 610
Modifying the Keepalive Interval on Serial Interfaces 613
Configuring IPHC 614
Prerequisites for Configuring IPHC 614
Configuring an IPHC Profile 615
Enabling an IPHC Profile on an Interface 617
Configuration Examples for Serial Interfaces 619
Bringing Up and Configuring a Serial Interface with Cisco HDLC Encapsulation: Example 619
Configuring a Serial Interface with Frame Relay Encapsulation: Example 620
Configuring a Serial Interface with PPP Encapsulation: Example 622
IPHC Configuration: Examples 622
IPHC Profile Configuration: Example 622
IPHC on a Serial Interface Configuration: Examples 623

IPHC on Multilink Configuration: Example 623
IPHC on a Serial Interface with MLPPP/LFI and QoS Configuration: Example 623

CHAPTER 18 **Configuring Frame Relay** 625
Configuring Frame Relay 626
Prerequisites for Configuring Frame Relay 627
Information About Frame Relay Interfaces 627
Frame Relay Encapsulation 627
LMI 629
Multilink Frame Relay (FRF.16) 631
Multilink Frame Relay High Availability 631
Multilink Frame Relay Configuration Overview 631
End-to-End Fragmentation (FRF.12) 635
Configuring Frame Relay 635
Modifying the Default Frame Relay Configuration on an Interface 636
Disabling LMI on an Interface with Frame Relay Encapsulation 638
Configuring Multilink Frame Relay Bundle Interfaces 640
Configuring FRF.12 End-to-End Fragmentation on a Channelized Frame Relay Serial Interface 646
Configuration Examples for Frame Relay 651
Optional Frame Relay Parameters: Example 651
Multilink Frame Relay: Example 654
End-to-End Fragmentation: Example 655

CHAPTER 19 **Configuring PPP** 657
Prerequisites for Configuring PPP 658
Information About PPP 658
PPP Authentication 658
PAP Authentication 659
CHAP Authentication 659
MS-CHAP Authentication 660
Multilink PPP 660
MLPPP Feature Summary 661
IPHC Over MLPPP 661
ICSSO for PPP and MLPPP 661

Multi-Router Automatic Protection Switching (MR-APS) 662
Session State Redundancy Protocol (SSRP) 662
Redundancy Group Manager (RG-MGR) 663
IP Fast Reroute (IP-FRR) 663
VPN Routing And Forwarding (VRF) 663
Open Shortest Path First (OSPF) 663
ICSSO Configuration Overview 663
Multiclass MLPPP with QoS 664
T3 SONET Channels 665
How to Configure PPP 666
Modifying the Default PPP Configuration 666
Configuring PPP Authentication 669
Enabling PAP, CHAP, and MS-CHAP Authentication 669
Configuring a PAP Authentication Password 671
Configuring a CHAP Authentication Password 673
Configuring an MS-CHAP Authentication Password 675
Disabling an Authentication Protocol 676
Disabling PAP Authentication on an Interface 676
Disabling CHAP Authentication on an Interface 678
Disabling MS-CHAP Authentication on an Interface 679
Configuring Multilink PPP 680
Configuring the Controller 681
Configuring the Interfaces 683
Configuring MLPPP Optional Features 686
Configuring ICSSO for PPP and MLPPP 688
Configuring a Basic ICSSO Implementation 689
Configuring MR-APS 690
Configuring SSRP on Serial and Multilink Interfaces 692
Configuration Examples for PPP 697
Configuring a POS Interface with PPP Encapsulation: Example 697
Configuring a Serial Interface with PPP Encapsulation: Example 698
Configuring MLPPP: Example 698
ICSSO for PPP and MLPPP Configuration: Examples 699
ICSSO Configuration: Example 699

Channelized SONET Controller Configuration for Use with ICSSO: Example 699
MR-APS Configuration: Example 700
SSRP on Serial and Multilink Interfaces Configuration: Example 700
VRF on Multilink Configuration for Use with ICSSO: Example 701
VRF on Ethernet Configuration for Use with ICSSO: Example 702
OSPF Configuration for Use with ICSSO: Example 702
Verifying ICSSO Configuration: Examples 703
Verifying SSRP Groups: Example 703
Verifying ICSSO Status: Example 703
Verifying MR-APS Configuration: Example 704
Verifying OSPF Configuration: Example 704
Verifying Multilink PPP Configurations 705

CHAPTER 20 **Configuring 802.1Q VLAN Interfaces** 707
Prerequisites for Configuring 802.1Q VLAN Interfaces 707
Information About Configuring 802.1Q VLAN Interfaces 708
802.1Q VLAN Overview 708
CFM on 802.1Q VLAN Interfaces 708
Subinterfaces 708
Subinterface MTU 709
Native VLAN 709
EFPs 709
Layer 2 VPN on VLANs 709
Other Layer 2 VPN Features 710
How to Configure 802.1Q VLAN Interfaces 710
Configuring 802.1Q VLAN Subinterfaces 711
Configuring an Attachment Circuit on a VLAN 713
Removing an 802.1Q VLAN Subinterface 715
Configuration Examples for VLAN Interfaces 717
VLAN Subinterfaces: Example 717

CHAPTER 21 **Configuring Virtual Services** 721
Prerequisites for Configuring Virtual Services 721
Restrictions for Configuring Virtual Services 722

Information about Configuring Virtual Services 722
Service Enablement 722
Virtual Service Package 722
How to Configure a Virtual Service 724
Enabling the Service Enablement Feature 724
Installing and Activating a Virtual Service 725
Deactivating a Virtual Service 728
Remove Virtual Service Configuration 729
Uninstalling a Virtual Service 730
Displaying Information about a Virtual Service 731
Configuration Examples for a Virtual Service 732

CHAPTER 22 **Configuring the 4xT 12in1 4-Port Serial SPA** 735
Configuration Tasks 735
Configuring the 4xT 12-in-1 Serial Interface SPA 735
Verifying the configuration 736
Specifying the Interface Address on a SPA 736
Optional Configurations 736
Configuring Timing Signals and Data Rate Options 737
Configuring Framing and Encoding Options 740
Configuring Interface Signal Control Options 740
Frame-Relay Configuration Guidelines 742
Verifying the Configuration 742
Verification Examples 743
Using the Ping Command to Verify Network Connectivity 749

# Preface

The *Cisco ASR 9000 Series Aggregation Services Router Interface and Hardware Component Configuration Guide* provides information and procedures related to router interface and hardware configuration.

From Release 6.1.2 onwards, Cisco introduces support for the 64-bit Linux-based IOS XR operating system. Extensive feature parity is maintained between the 32-bit and 64-bit environments. Unless explicitly marked otherwise, the contents of this document are applicable for both the environments. For more details on Cisco IOS XR 64 bit, refer to the Release Notes for Cisco ASR 9000 Series Routers, Release 6.1.2 document.

The preface contains the following sections:


- Changes to This Document, on page xxix
- Obtaining Documentation and Submitting a Service Request, on page xxix


## Changes to This Document

**Note** *This software release has reached end-of-life status. For more information, see the* End-of-Life and End-of-Sale Notices.

This table lists the technical changes made to this document since it was first released.

***Table 1: Changes to This Document***

| Date | Summary |
|---|---|
| January 2020 | Initial release of this document. |

## Obtaining Documentation and Submitting a Service Request

For information on obtaining documentation, submitting a service request, and gathering additional information, see the monthly *What's New in Cisco Product Documentation*, which also lists all new and revised Cisco technical documentation, at: http://www.cisco.com/c/en/us/td/docs/general/whatsnew/whatsnew.html

Subscribe to *What's New in Cisco Product Documentation*, which lists all new and revised Cisco technical documentation, as an RSS feed and deliver content directly to your desktop using a reader application. The RSS feeds are a free service.

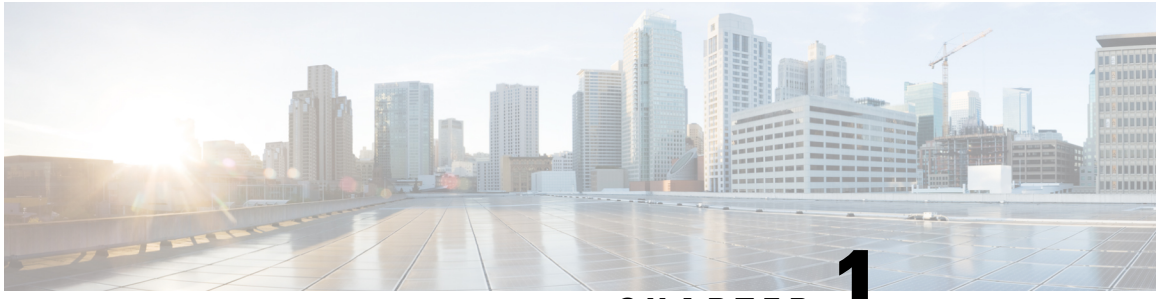

CHAPTER 1

# New and Changed Interface and Hardware Component Features

This chapter lists all the features that have been added or modified in this guide. The table also contains references to these feature documentation sections.


- Interface and Hardware Component Features Added or Modified in IOS XR Release 6.6.x, on page 1


## Interface and Hardware Component Features Added or Modified in IOS XR Release 6.6.x

| Feature | Description | Introduced/Changed in Release | Where Documented |
|---|---|---|---|
| ASR-9901 Support for Auto-negotiation | With this feature, ASR9901 supports auto-negotiation on 1GE port. | Release 6.6.1. | *Interface and Hardware Component Configuration Guide for Cisco ASR 9000 Series Routers, Release 6.6.x.* |

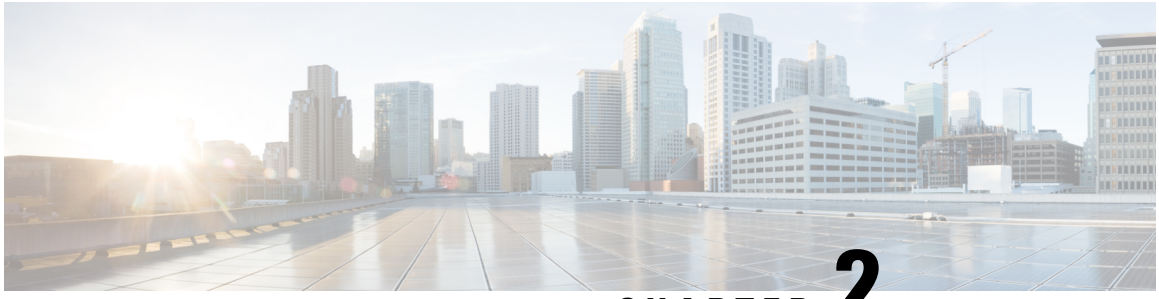

CHAPTER 2

# Preconfiguring Physical Interfaces

This module describes the preconfiguration of physical interfaces on the Cisco ASR 9000 Series Aggregation Services Routers.

Preconfiguration is supported for the following types of interfaces and controllers:

- Gigabit Ethernet
- 10-Gigabit Ethernet
- Management Ethernet
- Packet-over-SONET/SDH (POS)
- Serial
- SONET controllers and channelized SONET controllers

Preconfiguration allows you to configure modular services cards before they are inserted into the router. When the cards are inserted, they are instantly configured.

The preconfiguration information is created in a different system database tree (known as the *preconfiguration directory* on the route switch processor [RSP]), rather than with the regularly configured interfaces.

There may be some preconfiguration data that cannot be verified unless the modular services card is present, because the verifiers themselves run only on the modular services card. Such preconfiguration data is verified when the modular services card is inserted and the verifiers are initiated. A configuration is rejected if errors are found when the configuration is copied from the preconfiguration area to the active area.

**Note** Ten GigE interfaces will not show egress statistics when loopback line is configured because the loopback is closed at the interface controller level, before the Network Processor (NP). But on One GigE interfaces the line loopback is closed in the NP.

**Note** Only physical interfaces can be preconfigured.

**Feature History for Preconfiguring Physical Interfaces**

| Release | Modification |
|---|---|
| Release 3.7.2 | Ethernet interface preconfiguration was introduced. |
| Release 4.0.0 | POS interface preconfiguration was introduced. |


- Preconfiguring Physical Interfaces, on page 4
- Prerequisites for Preconfiguring Physical Interfaces, on page 5
- Information About Preconfiguring Physical Interfaces, on page 5
- How to Preconfigure Physical Interfaces, on page 7
- Configuration Examples for Preconfiguring Physical Interfaces, on page 8


# Preconfiguring Physical Interfaces

This module describes the preconfiguration of physical interfaces on the Cisco ASR 9000 Series Aggregation Services Routers.

Preconfiguration is supported for the following types of interfaces and controllers:

- Gigabit Ethernet
- 10-Gigabit Ethernet
- Management Ethernet
- Packet-over-SONET/SDH (POS)
- Serial
- SONET controllers and channelized SONET controllers

Preconfiguration allows you to configure modular services cards before they are inserted into the router. When the cards are inserted, they are instantly configured.

The preconfiguration information is created in a different system database tree (known as the *preconfiguration directory* on the route switch processor [RSP]), rather than with the regularly configured interfaces.

There may be some preconfiguration data that cannot be verified unless the modular services card is present, because the verifiers themselves run only on the modular services card. Such preconfiguration data is verified when the modular services card is inserted and the verifiers are initiated. A configuration is rejected if errors are found when the configuration is copied from the preconfiguration area to the active area.

**Note** Ten GigE interfaces will not show egress statistics when loopback line is configured because the loopback is closed at the interface controller level, before the Network Processor (NP). But on One GigE interfaces the line loopback is closed in the NP.

**Note** Only physical interfaces can be preconfigured.

**Feature History for Preconfiguring Physical Interfaces**

| Release | Modification |
|---|---|
| Release 3.7.2 | Ethernet interface preconfiguration was introduced. |
| Release 4.0.0 | POS interface preconfiguration was introduced. |

# Prerequisites for Preconfiguring Physical Interfaces

You must be in a user group associated with a task group that includes the proper task IDs. The command reference guides include the task IDs required for each command. If you suspect user group assignment is preventing you from using a command, contact your AAA administrator for assistance.

Before preconfiguring physical interfaces, be sure that the following condition is met:

- Preconfiguration drivers and files are installed. Although it may be possible to preconfigure physical interfaces without a preconfiguration driver installed, the preconfiguration files are required to set the interface definition file on the router that supplies the strings for valid interface names.

# Information About Preconfiguring Physical Interfaces

To preconfigure interfaces, you must understand the following concepts:

## Physical Interface Preconfiguration Overview

Preconfiguration is the process of configuring interfaces before they are present in the system. Preconfigured interfaces are not verified or applied until the actual interface with the matching location (rack/slot/module) is inserted into the router. When the anticipated modular services card is inserted and the interfaces are created, the precreated configuration information is verified and, if successful, immediately applied to the router's running configuration.

**Note** When you plug the anticipated modular services card in, make sure to verify any preconfiguration with the appropriate **show** commands.

Use the **show run** command to see interfaces that are in the preconfigured state.

**Note** We recommend filling out preconfiguration information in your site planning guide, so that you can compare that anticipated configuration with the actual preconfigured interfaces when that card is installed and the interfaces are up.

**Tip** Tip Use the **commit best-effort** command to save the preconfiguration to the running configuration file. The **commit best-effort** command merges the target configuration with the running configuration and commits only valid configuration (best effort). Some configuration might fail due to semantic errors, but the valid configuration still comes up.

# Benefits of Interface Preconfiguration

Preconfigurations reduce downtime when you add new cards to the system. With preconfiguration, the new modular services card can be instantly configured and actively running during modular services card bootup.

Another advantage of performing a preconfiguration is that during a card replacement, when the modular services card is removed, you can still see the previous configuration and make modifications.

# Use of the Interface Preconfigure Command

Interfaces that are not yet present in the system can be preconfigured with the **interface preconfigure** command in global configuration mode.

The **interface preconfigure** command places the router in interface configuration mode. Users should be able to add any possible interface commands. The verifiers registered for the preconfigured interfaces verify the configuration. The preconfiguration is complete when the user enters the **end** command, or any matching exit or global configuration mode command.

**Note** It is possible that some configurations cannot be verified until the modular services card is inserted.

Do not enter the **no shutdown** command for new preconfigured interfaces, because the no form of this command removes the existing configuration, and there is no existing configuration.

Users are expected to provide names during preconfiguration that will match the name of the interface that will be created. If the interface names do not match, the preconfiguration cannot be applied when the interface is created. The interface names must begin with the interface type that is supported by the router and for which drivers have been installed. However, the slot, port, subinterface number, and channel interface number information cannot be validated.

**Note** Specifying an interface name that already exists and is configured (or an abbreviated name like e0/3/0/0) is not permitted.

# Active and Standby RSPs and Virtual Interface Configuration

The standby RSP is available and in a state in which it can take over the work from the active RSP should that prove necessary. Conditions that necessitate the standby RSP to become the active RSP and assume the active RSP's duties include:

- Failure detection by a watchdog

- Standby RSP is administratively commanded to take over
- Removal of the active RSP from the chassis

If a second RSP is not present in the chassis while the first is in operation, a second RSP may be inserted and will automatically become the standby RSP. The standby RSP may also be removed from the chassis with no effect on the system other than loss of RSP redundancy.

After failover, the virtual interfaces will all be present on the standby (now active) RSP. Their state and configuration will be unchanged, and there will have been no loss of forwarding (in the case of tunnels) over the interfaces during the failover. The Cisco ASR 9000 Series Router uses nonstop forwarding (NSF) over tunnels through the failover of the host RSP.

**Note** The user does not need to configure anything to guarantee that the standby interface configurations are maintained.

# How to Preconfigure Physical Interfaces

This task describes only the most basic preconfiguration of an interface.

### SUMMARY STEPS

1. **configure**
2. **interface preconfigure** *type interface-path-id*
3. Use one of the following commands:
   - **ipv4 address** *ip-address subnet-mask*
   - **ipv4 address***ip-address / prefix*
4. Configure additional interface parameters, as described in this manual in the configuration chapter that applies to the type of interface that you are configuring.
5. **end** or **commit** best-effort
6. **show running-config**

### DETAILED STEPS

| | Command or Action | Purpose |
|---|---|---|
| **Step 1** | **configure**<br>**Example:**<br>`RP/0/ configure` | Enters global configuration mode. |
| **Step 2** | **interface preconfigure** *type interface-path-id*<br>**Example:**<br>`RP/0//CPU0:router(config)# interface preconfigure GigabitEthernet 0/1/0/0` | Enters interface preconfiguration mode for an interface, where *type* specifies the supported interface type that you want to configure and *interface-path-id* specifies the location where the interface will be located in *rack*/*slot*/*module*/*port* notation. |

| | Command or Action | Purpose |
|---|---|---|
| **Step 3** | Use one of the following commands:<br>• **ipv4 address** *ip-address subnet-mask*<br>• **ipv4 address***ip-address/prefix*<br>**Example:**<br>`RP/0//CPU0:router(config-if-pre)# ipv4 address 192.168.1.2/32` | Assigns an IP address and mask to the interface. |
| **Step 4** | Configure additional interface parameters, as described in this manual in the configuration chapter that applies to the type of interface that you are configuring. | |
| **Step 5** | **end** or **commit** best-effort<br>**Example:**<br>`RP/0//CPU0:router(config-if-pre)# end`<br>or<br>`RP/0//CPU0:router(config-if-pre)# commit` | Saves configuration changes.<br>• When you issue the **end** command, the system prompts you to commit changes: `Uncommitted changes found, commit them before exiting (yes/no/cancel)?`<br>• Entering **yes** saves configuration changes to the running configuration file, exits the configuration session, and returns the router to EXEC mode.<br>• Entering **no** exits the configuration session and returns the router to EXEC mode without committing the configuration changes.<br>• Entering **cancel** leaves the router in the current configuration session without exiting or committing the configuration changes.<br>• Use the **commit best-effort** command to save the configuration changes to the running configuration file and remain within the configuration session. The **commit best-effort** command merges the target configuration with the running configuration and commits only valid changes (best effort). Some configuration changes might fail due to semantic errors. |
| **Step 6** | **show running-config**<br>**Example:**<br>`RP/0//CPU0:router# show running-config` | (Optional) Displays the configuration information currently running on the router. |

# Configuration Examples for Preconfiguring Physical Interfaces

This section contains the following example:

# Preconfiguring an Interface: Example

The following example shows how to preconfigure a basic Ethernet interface:

```
RP/0//CPU0:router# configure
RP/0//CPU0:router(config)# interface preconfigure GigabitEthernet 0/1/0/0
RP/0//CPU0:router(config-if)# ipv4 address 192.168.1.2/32
RP/0//CPU0:router(config-if)# commit
```

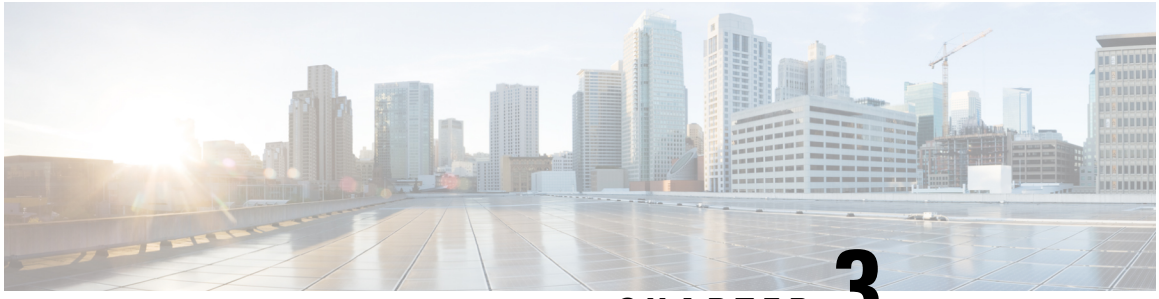

CHAPTER 3

# Configuring ATM Interfaces

This module describes how to configure ATM.

ATM is a cell-switching and multiplexing technology that is widely used in Wide Area Networks (WANs). ATM protocol standards enable point-to-point, point-to-multipoint, and broadcast services connections using various slow- and high-speed network media. Connectivity between two ATM permanent virtual circuits (PVCs) is established using ATM signaling mechanisms. Various ATM signaling standards are defined by these ATM forum standards:

- UNI Version 3.0, Version 3.1, and Version 4.0
- ITU
- IETF

#### Feature History for Configuring ATM Interfaces

| Release | Modification |
|---|---|
| Release 4.2.3 | This feature was introduced on the Cisco ASR 9000 Series Router on these hardware:<br>• 3-Port Clear Channel OC-3 ATM SPA<br>• 1-Port Clear Channel OC-3 ATM SPA<br>• 1-port Clear Channel OC-12 ATM SPA |


- Configuring ATM Interfaces, on page 11
- Prerequisites for Implementing ATM, on page 12
- Information About ATM, on page 12
- Configuring ATM Interfaces, on page 21
- ATM Configuration: Examples, on page 65


# Configuring ATM Interfaces

This module describes how to configure ATM.

ATM is a cell-switching and multiplexing technology that is widely used in Wide Area Networks (WANs). ATM protocol standards enable point-to-point, point-to-multipoint, and broadcast services connections using various slow- and high-speed network media. Connectivity between two ATM permanent virtual circuits (PVCs) is established using ATM signaling mechanisms. Various ATM signaling standards are defined by these ATM forum standards:

- UNI Version 3.0, Version 3.1, and Version 4.0
- ITU
- IETF

**Feature History for Configuring ATM Interfaces**

| Release | Modification |
|---|---|
| Release 4.2.3 | This feature was introduced on the Cisco ASR 9000 Series Router on these hardware:<br>• 3-Port Clear Channel OC-3 ATM SPA<br>• 1-Port Clear Channel OC-3 ATM SPA<br>• 1-port Clear Channel OC-12 ATM SPA |

# Prerequisites for Implementing ATM

You must be in a user group associated with a task group that includes the proper task IDs. The command reference guides include the task IDs required for each command. If you suspect user group assignment is preventing you from using a command, contact your AAA administrator for assistance.

# Information About ATM

This section provides overviews of these features:

Network nodes use ATM connections to transfer bits of data organized as 53-byte ATM cells. User information (such as voice, video, and data) is segmented into ATM cells on one end of the connection, and then reassembled on the other end of the connection. ATM Adaptation Layer (AAL) defines the conversion of user information into ATM cells. AAL1 and AAL2 handle isochronous traffic (such as voice and video), and are relevant to the ATM node only when it is equipped with either a CES (Circuit Emulation Service) ATM interface card, or when it has voice over AAL2 capabilities. AAL3/4 and AAL5 support data communications; that is, they segment and reassemble data packets.

The two types of devices in an ATM network are switches and routers. Typically, ATM switches do packet switching at Layer 2, while ATM routers do packet switching using Layer 3 addresses, such as IPv4 network addresses, IPv6 network addresses, and MPLS labels.

ATM is supported on the following line cards:

- Cisco 1-port Clear Channel OC-3 SPA
- Cisco 3-port Clear Channel OC-3 SPA

- Cisco 1-port Clear Channel OC-12 SPA
- Cisco 2-Port Channelized T3/E3 ATM and Circuit Emulation (CEoPs) Shared Port Adapter (SPA-2CHT3-CE-ATM)

Cisco IOS XR software ATM interfaces can operate in these modes:

- Point-to-point
- Layer 2 port mode

**Note** A single ATM interface can simultaneously support point-to-point and L2VPN subinterfaces.

In Cisco IOS XR software, ATM interface configuration is hierarchical and comprises the following elements:

1. The ATM main interface, which is the physical interface. ATM main interfaces can be configured with point-to-point subinterfaces, vp-tunnels, ILMI interfaces, or as Layer 2 port mode attachment circuits (ACs) or Layer 2 subinterface ACs.
2. ATM subinterfaces, which are configured under the ATM main interface. An ATM subinterface does not actively carry traffic until you configure a PVC or PVP under the ATM subinterface.
3. PVCs, which are configured under an ATM subinterface. A single PVC is allowed per subinterface. PVCs are supported under point-to-point and Layer 2 subinterfaces.
4. Permanent virtual paths (PVPs), which are configured under a Layer 2 ATM subinterface. A single PVP is allowed per subinterface.

# VC-Class Mapping

A virtual circuit (VC) class enables the configuration of VC parameters that are then mapped to a main interface, subinterface, or PVC. Without vc-classes, you must perform considerable manual configuration on each ATM main interface, subinterface, and PVC and on the router. This configuration can be time consuming and error prone. After you have created vc-class, you can apply that vc-class to as many ATM interfaces, subinterfaces, or PVCs as you want.

Vc-classes include the following types of configuration data:

- ATM encapsulation for the VC
- OAM management
- traffic shaping

The order of configuration precedence is hierarchical, as demonstrated in the following list, where configuration on the PVC takes the highest precedence, and configuration on a vc-class that is attached to the ATM main interface takes the lowest precedence:

1. Configuration on the PVC
2. Configuration on a vc-class that is attached to the PVC
3. Configuration on the subinterface

4. Configuration on a vc-class that is attached to the subinterface
5. Configuration on the ATM main interface
6. Configuration on a vc-class that is attached to the ATM main interface

For example, if the a PVC has unspecified bit rate (UBR) traffic shaping configured, but it is attached to a class map that is configure with CBR traffic shaping, the PVC maintains the UBR traffic shaping.

**Note** Vc-classes are not applicable to Layer 2 port mode ACs and Layer 2 PVPs. For Layer 2 VPN configurations, Vc-classes are applicable to the PVC only.

# VP-Tunnels

ATM interfaces support vp-tunnels. vp-tunnels are typically used to shape PVCs into a bundle and manage F4 Operation, Administration, and Maintenance (OAM). A vp-tunnel is configured under the main ATM interface, and then subinterfaces and PVCs can be added to the vp-tunnel. vp-tunnels and the PVCs that are configured under them share the same VPI. When a vp-tunnel goes down, all PVCs configured under that vp-tunnel go down, too.

By default, two F4 OAM connections are automatically opened for each vp-tunnel. Use the **f4oam disable** command in ATM vp-tunnel configuration mode to disable the F4 OAM packets for a vp-tunnel.

# F5 OAM on ATM Interfaces

The F5 Operation, Administration, and Maintenance (OAM) feature performs fault-management and performance-management functions on PVCs. If the F5 OAM feature is not enabled on a PVC, then that PVC remains up on the end device in the event of a service disruption where network connectivity is lost. The result is that routing entries that point to the connection remain in the routing table and, therefore, packets are lost. The F5 OAM feature detects such failures and brings the PVC down if there is a disruption along its path.

Use the **oam-pvc manage** command to enable the F5OAM feature on a PVC. After OAM is enabled on a PVC, the PVC can generate F5 loopback cells and you can configure continuity check (CC) management for the PVC. Use the **oam ais-rdi** and **oam retry** commands to configure continuity checking on a PVC.

To drop all current and future OAM cells received on an ATM interface, use the **atm oam flush** command in interface configuration mode.

**Note** The **oam ais-rdi** and **oam retry** commands take effect only after OAM management is enabled on a PVC with the **oam-pvc manage** command.

# ILMI on ATM Interfaces

The ILMI protocol is defined by the ATM Forum for setting and capturing physical layer, ATM layer, virtual path, and virtual circuit parameters on ATM interfaces. When two ATM interfaces run the ILMI protocol, they exchange ILMI packets across the physical connection. These packets consist of SNMP messages as

large as 484 octets. ATM interfaces encapsulate these messages in an ATM adaptation layer 5 (AAL5) trailer, segment the packet into cells, and schedule the cells for transmission.

You must enable ILMI on ATM interfaces that communicate with end devices that are configured for ILMI. To enable ILMI, create a PVC with ILMI encapsulation directly under the main ATM interface by using the **pvc** *vpi*/*vci* **ilmi** command in interface configuration mode.

PVCs use ILMI encapsulation to carry ILMI messages. Use the **pvc** *vpi*/*vci* **ilmi** command in interface configuration mode to create an ILMI PVC on an ATM main interface.

**Note** You must use the same VPI and VCI values on both ends of the PVC that connects the end device and the router. The ILMI configuration commands are available only after an ILMI PVC is created under the ATM main interface. The ILMI configuration takes effect on the ATM main interface. ILMI configuration is not supported on Layer 2 port mode ACs.

# Layer 2 VPN on ATM Interfaces

The Layer 2 VPN (L2VPN) feature enables the connection between different types of Layer 2 attachment circuits and pseudowires, allowing users to implement different types of end-to-end services.

Cisco IOS XR software supports a point-to-point, end-to-end service, where two ATM ACs are connected together.

Switching can take place in two ways:

- AC-to-PW—Traffic reaching the PE is tunneled over a pseudowire (and conversely, traffic arriving over the PW is sent out over the AC). This is the most common scenario.
- Local switching—Traffic arriving on one AC is immediately sent out another AC without passing through a pseudowire.

Keep the following in mind when configuring L2VPN on an ATM interface:

- Cisco IOS XR software supports up to 2000 ACs per line card.
- ATM-over-MPLS supports two types of cell encapsulation:
  - AAL5 CPCS mode—Unsegmented ATM cells are transported across an MPLS backbone.
  - ATM cell (AAL0) mode—Cells are segmented and then reassembled, or packed. AAL0 is supported on ATM main ports, PVCs, and PVPs. The benefits of using AAL0 mode is that groups of ATM cells share a label that maximizes bandwidth efficiencies.

**Note** AAL5 mode is supported on PVCs only.

Use the following commands to display AC and pseudowire information:

- **show interfaces**
- **show l2vpn xconnect**

- **show atm pvp**
- **show atm pvc**

**Note** For detailed information about configuring an L2VPN network, see the *Implementing MPLS Layer 2 VPNs* module of *Cisco IOS XR Multiprotocol Label Switching Configuration Guide.*

## Cell Packing on L2VPN ACs with AAL0 Mode Encapsulation

Cell packing is supported on L2VPN ATM interfaces that are configured with AAL0 mode encapsulation. Cell packing relates to the delay variations that are defined in the ATM standards. Users can specify the number of cells that can be processed by the pseudowire, and configure the maximum cell packing timeout (MCPT) timers to use in conjunction with cell packing.

The **cell-packing** command allows the user to perform the following tasks:

- Configure the maximum number of cells that can be transmitted in a single packet.
- Attach one of the three MCPT timers to an individual Layer 2 port mode AC, PVC, or PVP.

The three MCPT timers are defined under the main ATM interface with the **atm mcpt-timer** command, which lets the user specify the maximum number of microseconds to wait to complete cell packing on a single packet before that packet is transmitted. If the associated MCPT timer expires before the maximum number of cells that can be packed is reached, then the packet is transmitted with the number of cells that have been packed thus far.

We recommend configuring a low, medium, and high value for the three MCPT timers to accommodate the different ATM traffic classes. Low- latency constant bit rate (CBR) traffic typically uses a low MCPT timer value, while high-latency Unspecified bit rate (UBR) traffic typically requires a high MCPT timer value. Variable bit rate real-time (VBR-rt) and variable bit rate non-real-time (VBR-nrt) traffic typically use a median MCPT timer value.

# Circuit Emulation over Packet on the Cisco 2-Port Channelized T3/E3 ATM and Circuit Emulation Shared Port Adapter

The Circuit Emulation over Packet (CEoP) SPA is a low-speed ATM SPA that enables service providers and enterprises to migrate to a one-packet network capable of efficiently delivering both data and circuit services.

CEoP is a virtual imitation of a physical connection. CEoP does ATM conversion and transparent transfer of ATM data to the router engine. CEoP first performs cell delineation, then segmentation and reassembly (SAR), and then sends the cells to the router engine.

CEoP benefits service providers who operate both packet-switched networks and time-division multiplexed (TDM) networks, who wish to move their data services from a TDM network to a packet network for scalability and efficiency.

Cisco provides routing and switching solutions capable of transporting Layer 2 and Layer 3 protocols such as Ethernet, IP, and Frame Relay. Although most applications and services have been migrated to the packet-based network, some, including voice and legacy applications, still rely on a circuit or leased line for transport. The CEoP SPAs implement Circuit-Emulation-over-Packet by transporting circuits over a

packet-based network. CEoP SPAs help service providers migrate to one packet network capable of efficiently delivering both data and circuit services.

CEoP is supported on:

- Cisco 2-Port Channelized T3/E3 ATM and Circuit Emulation (CEoPs) Shared Port Adapter (SPA-2CHT3-CE-ATM)

No new or specific configurations or CLIs are necessary to enable CEoP on the card.

## Features Supported in CEoP

CEoP supports these features:

- T3 channelized to T1
- Clear channel T3
- ATM encapsulation only
- Packet forwarding
- Scalability - 2K L3 interfaces per CEoP SPA
- Scalability - 2K L2 connections per CEoP SPA
- On-Line Insertion and Removal (OIR)
- Quack authentication
- Environment Monitoring
- FPD
- Quality of Service (QoS)
- Inverse Multiplexing (IMA)

# ATM Layer 2 QoS

QoS is configured on ATM interfaces primarily in the same way that it is configured on other interfaces. No new CLIs are added in this release.

For complete information on configuring QoS and QoS commands, refer to these documents:

- *Cisco ASR 9000 Series Aggregation Services Router Modular Quality of Service Configuration Guide*
- *Cisco ASR 9000 Series Aggregation Services Router Modular Quality of Service Command Reference*

**Note** Layer 2 QoS is supported on all Engine 5 ATM SPAs, including all CEoP SPAs.

This section describes the features and restrictions that apply to ATM Layer 2 QoS.

## Features

These QoS features are supported:

- Layer 2 Ingress QoS – classification on ATM CLP, marking with MPLS EXP imposition are supported.
- Layer 2 Egress Main Interface QoS – shaping, policing, and queueing are supported. Marking is not supported. This feature works on both Layer 2 and Layer 3 PVCs independent of any subinterface QoS policies.
- The Modular QoS CLI (MQC) actions are supported for ATM traffic in the ingress direction only.
    - match atm clp
    - match atm oam
    - set atm clp
    - set mpls exp imp
    - set prec tunnel (L2TPv3 only)
    - set dscp tunnel (L2TPv3 only)
- Traffic is classified based on Cell Loss Priority–CLP1, CLP0, or OAM.
- OAM traffic can be excluded from policing by using the match-oam classification in a hierarchical policy map
- The following set actions are supported:
    - set mpls exp imp
    - set prec tunnel
    - set dscp tunnel
    - set qos-group
    - set disc-class
    - set atm-clp (exceed action only)
- Policy map counters are supported.

## Matching

The following match criteria is supported on Layer 2 ATM interfaces in the ingress direction only:

- match atm clp0
- match atm clp1
- match atm oam

The following match criteria is supported on Layer 2 ATM interfaces in the egress direction only:

- match mpls exp topmost (egress only)
- match qos-group (egress only)

**Note** The **match-all** command does not support the above match criteria.

## Marking

The following marking actions are supported on Layer 2 ATM interfaces:

- set mpls exp imposition (AToM only)
- set qos-group (AToM and local switching)
- set discard-class (AToM and local switching)
- set mpls exp imposition and set atm-clp (AToM only)
- set tunnel-dscp (L2TPv3 only)
- set tunnel-prec (L2TPv3 only)

**Note** Packets can be matched and remarked for CLP0, CLP1, and OAM.

## Policing

Policing is supported on Layer 2 ATM interfaces in the ingress direction only.

Policing is performed during segmentation and reassembly (SAR) for the following ATM traffic classes:

- CBR.1
- VBR.1
- VBR.2
- VBR.3
- UBR.1
- UBR.2

Policing is supported for VC and VP modes, but not for Port mode L2 ATM interfaces.

OAM cells are policed along with the user cells unless the QOS policy is explicitly configured to exclude OAM cells from being policed. This can be achieved using different match criteria in the policy map with class-default matching all the traffic including OAM cells.

Policing is supported for ATM AAL5SNAP, AAL5MUX and AAL5NLPID encapsulated packets.

Policing is done on AAL0 packets with the same conditions as AAL5 packets as follows:

- AAL5 packet is conforming if all the cells in the packet conform to PCR and SCR buckets.
- AAL5 packet is exceeding if at least one cell does not conform to the SCR bucket.
- AAL5 packet is violating if at least one cell does not conform to the PCR bucket.

**Note** The Martini Control Word C bit is set for all exceeding AAL5 packets. All violating AAL5 packets are dropped.

The following policing options are supported for ATM TM4.0 GCRA policing:

- Rate in cellsps and percent
- Peak rate in cellsps and percent
- Delay tolerance in us
- Maximum burst size in cells

The following conform and exceed actions are supported for Layer 2 ATM interfaces in the ingress direction:

- transmit
- drop
- set mpls exp imposition (AToM only)
- set qos-group (AToM and Local switching)
- set discard-class (AToM and Local switching)
- set atm-clp (exceed action only, AToM and Local switching)
- set tunnel-prec (L2TPv3 only)
- set tunnel-dscp (L2TPv3 only)

**Note** The only violate action that is supported is the drop action.

The following combination of multiple policing actions is supported:

- set mpls exp imposition and set atm-clp (exceed action only, AToM only)

## Hierarchical Policy Maps

For VBR.2 and VBR.3 traffic classes, 2-level hierarchical policy maps are supported in the ingress direction only. Attempts to attach hierarchical policy maps in the egress direction are denied.

The parent policy contains the policing configuration for the PCR bucket and matches on all traffic. The parent policy may exclude OAM traffic.

The child policy contains the policing configuration for the SCR bucket and typically matches on CLP0 cells.

Marking actions are supported only in child policy maps. All other policing actions are allowed in parent policy maps.

Only two policing buckets per Layer 2 circuit are allowed; one in the parent policy that defines the peak rate, and one in the child policy that defines the SCR.

Typically CLP0 cells are sent to the SCR bucket, but it is possible to send both CLP0 and CLP1 cells to the SCR bucket, using the classification criteria in the child policy.

**Note** For ATM Layer 2 QoS, in policy maps, the **set atm-clp** command is supported only as a police exceed action. It is not supported as a standalone set action.

# Configuring ATM Interfaces

The ATM interface configuration tasks are described in these procedures:

## Bringing Up an ATM Interface

This task describes the commands used to bring up an ATM interface.

### Before you begin

**Restrictions**

The configuration on both ends of the ATM connection must match for the interface to be active.

### SUMMARY STEPS

1. **configure**
2. **interface atm** *interface-path-id*
3. **no shutdown**
4. **end** or **commit**
5. **exit**
6. **exit**
7. **show interfaces atm** *interface-path-id* **brief**

### DETAILED STEPS

| | Command or Action | Purpose |
|---|---|---|
| **Step 1** | **configure**<br>**Example:**<br>`RP/0/RSP0/CPU0:router# configure` | Enters global configuration mode. |
| **Step 2** | **interface atm** *interface-path-id*<br>**Example:**<br>`RP/0/RSP0/CPU0:router (config)# interface atm 0/6/0/1` | Enters ATM interface configuration mode. |
| **Step 3** | **no shutdown**<br>**Example:** | Removes the shutdown configuration. |

| | Command or Action | Purpose |
|---|---|---|
| | `RP/0/RSP0/CPU0:router (config-if)# no shutdown` | **Note** • Removal of the shutdown configuration eliminates the forced administrative down on the interface, enabling it to move to an up or down state. |
| **Step 4** | **end** or **commit**<br>**Example:**<br>`RP/0/RSP0/CPU0:router (config-if)# end`<br>or<br>`RP/0/RSP0/CPU0:router(config-if)# commit` | Saves configuration changes.<br>• When you issue the **end** command, the system prompts you to commit changes:<br>`Uncommitted changes found, commit them before exiting(yes/no/cancel)? [cancel]:`<br>• Entering **yes** saves configuration changes to the running configuration file, exits the configuration session, and returns the router to EXEC mode.<br>• Entering **no** exits the configuration session and returns the router to EXEC mode without committing the configuration changes.<br>• Entering **cancel** leaves the router in the current configuration session without exiting or committing the configuration changes.<br>• Use the **commit** command to save the configuration changes to the running configuration file and remain within the configuration session. |
| **Step 5** | **exit**<br>**Example:**<br>`RP/0/RSP0/CPU0:router (config-if)# exit` | Exits interface configuration mode and enters global configuration mode. |
| **Step 6** | **exit**<br>**Example:**<br>`RP/0/RSP0/CPU0:router (config)# exit` | Exits global configuration mode and enters EXEC mode.<br>Repeat Step 1 through Step 6 to bring up the interface at the other end of the connection.<br>Brings up the connection.<br>**Note** • The configuration on both ends of the ATM connection must match. |
| **Step 7** | **show interfaces atm** *interface-path-id* **brief**<br>**Example:**<br>`RP/0/RSP0/CPU0:router# show interfaces atm 0/6/0/1 brief` | (Optional) Verifies that the interface is active and properly configured.<br>If you have brought up an ATM interface properly, the “Intf State” field for that interface in the **show interfaces atm** command output shows “up.” |

### What to do next

To modify the default configuration of the ATM interface you just brought up, see the "Configuring Optional ATM Interface Parameters" section on page 26.

To configure a point-to-point subinterface on the ATM interface you just brought up, see the "How to Create and Configure a Point-to-Point ATM Subinterface with a PVC" section on page 28.

To create a vp-tunnel on the ATM interface you just brought up, see the "How to Create and Configure a VP-Tunnel" section on page 33.

To use the interface as a Layer 2 post mode AC, see the "How to Configure a Layer 2 Attachment Circuit" section on page 40.

To attach a Vc-class to the ATM interface you just brought up, see the "How to Create and Configure a VC-Class" section on page 52.

To enable ILMI on the ATM interface you just brought up, see the "How to Configure ILMI on ATM Interfaces" section on page 59.

## Configuring Optional ATM Interface Parameters

This task describes the commands you can use to modify the default configuration on an ATM interface.

### Before you begin

Before you modify the default ATM interface configuration, we recommend that you bring up the ATM interface and remove the shutdown configuration, as described in the Bringing Up an ATM Interface.

**Restrictions**

The configuration on both ends of the ATM connection must match for the interface to be active.

### SUMMARY STEPS

1. **configure**
2. **interface atm** *interface-path-id*
3. **atm maxvpi-bits 12**
4. **atm oam flush**
5. **atm mcpt-timers** *timer-1 timer-2 timer-3*
6. **end** or **commit**
7. **exit**
8. **exit**
9. **show atm interface atm** [*interface-path-id*]
10. **show interfaces atm** *interface-path-id*

### DETAILED STEPS

| | Command or Action | Purpose |
|---|---|---|
| **Step 1** | **configure**<br>**Example:**<br>`RP/0/RSP0/CPU0:router# configure` | Enters global configuration mode. |

| | Command or Action | Purpose |
|---|---|---|
| **Step 2** | **interface atm** *interface-path-id*<br>**Example:**<br>`RP/0/RSP0/CPU0:router (config)# interface atm 0/6/0/1` | Enters ATM interface configuration mode. |
| **Step 3** | **atm maxvpi-bits 12**<br>**Example:**<br>`RP/0/RSP0/CPU0:router (config-if)# atm maxvpi-bits 12` | (Optional) Enables support for the 12-bit VPI NNI cell format. |
| **Step 4** | **atm oam flush**<br>**Example:**<br>`RP/0/RSP0/CPU0:router (config-if)# atm oam flush` | (Optional) Drops all current and future OAM cells received on an ATM interface. |
| **Step 5** | **atm mcpt-timers** *timer-1 timer-2 timer-3*<br>**Example:**<br>`RP/0/RSP0/CPU0:router (config-if)# atm mcpt-timers 50 100 200` | (Optional) Specifies the maximum cell packing timeout values for each of the three per-interface MCPT timers, in microseconds.<br>**Note** • The default value for each timer is 50 microseconds.<br>• The **atm mcpt-timers** command is applicable to Layer 2 ATM ACs only. |
| **Step 6** | **end** or **commit**<br>**Example:**<br>`RP/0/RSP0/CPU0:router (config-if)# end`<br>or<br>`RP/0/RSP0/CPU0:router(config-if)# commit` | Saves configuration changes.<br>• When you issue the **end** command, the system prompts you to commit changes:<br>`Uncommitted changes found, commit them before exiting(yes/no/cancel)? [cancel]:`<br>• Entering **yes** saves configuration changes to the running configuration file, exits the configuration session, and returns the router to EXEC mode.<br>• Entering **no** exits the configuration session and returns the router to EXEC mode without committing the configuration changes.<br>• Entering **cancel** leaves the router in the current configuration session without exiting or committing the configuration changes.<br>• Use the **commit** command to save the configuration changes to the running configuration file and remain within the configuration session. |

| | Command or Action | Purpose |
|---|---|---|
| **Step 7** | **exit**<br>**Example:**<br>`RP/0/RSP0/CPU0:router (config-if)# exit` | Exits interface configuration mode and enters global configuration mode. |
| **Step 8** | **exit**<br>**Example:**<br>`RP/0/RSP0/CPU0:router (config)# exit` | Exits global configuration mode and enters EXEC mode. |
| **Step 9** | **show atm interface atm** [*interface-path-id*]<br>**Example:**<br>`RP/0/RSP0/CPU0:router# show atm interface atm 0/6/0/1` | (Optional) Displays ATM-specific data for the specified ATM interface. |
| **Step 10** | **show interfaces atm** *interface-path-id*<br>**Example:**<br>`RP/0/RSP0/CPU0:router# show interfaces atm 0/6/0/1` | (Optional) Displays general information for the specified ATM interface. |

### What to do next

To configure a point-to-point subinterface on the ATM interface you just brought up, see the “How to Create and Configure a Point-to-Point ATM Subinterface with a PVC” section on page 28.

To create a vp-tunnel on the ATM interface you just brought up, see the “How to Create and Configure a VP-Tunnel” section on page 33.

To use the interface as a Layer 2 ATM AC, see the “How to Configure a Layer 2 Attachment Circuit” section on page 40.

To attach a Vc-class to the ATM interface you just brought up, see the “How to Create and Configure a VC-Class” section on page 52.

To enable ILMI on the ATM interface you just brought up, see the “How to Configure ILMI on ATM Interfaces” section on page 59.

# How to Create and Configure a Point-to-Point ATM Subinterface with a PVC

The configuration tasks for creating and configuring a point-to-point ATM subinterface with a PVC are described in the following procedures:

# Creating a Point-to-Point ATM Subinterface with a PVC

The procedure in this section creates a point-to-point ATM subinterface and configures a permanent virtual circuit (PVC) on that ATM subinterface.

### Before you begin

Before you can create an ATM subinterface on an ATM interface, you must bring up an ATM interface, as described in the Bringing Up an ATM Interface.

**Restrictions**

Only one PVC can be configured for each point-to-point ATM subinterface.

## SUMMARY STEPS

1. **configure**
2. **interface atm** *interface-path-id.subinterface* **point-to-point**
3. **ipv4 address** *ipv4_address/prefix*
4. **pvc** *vpi/vci*
5. **end** or **commit**

## DETAILED STEPS

| | Command or Action | Purpose |
|---|---|---|
| **Step 1** | **configure**<br>**Example:**<br>`RP/0/RSP0/CPU0:router# configure` | Enters global configuration mode. |
| **Step 2** | **interface atm** *interface-path-id.subinterface* **point-to-point**<br>**Example:**<br>`RP/0/RSP0/CPU0:router (config)# interface atm 0/6/0/1.10` | Enters ATM subinterface configuration mode. |
| **Step 3** | **ipv4 address** *ipv4_address/prefix*<br>**Example:**<br>`RP/0/RSP0/CPU0:router (config-subif)#ipv4 address 10.46.8.6/24` | Assigns an IP address and subnet mask to the subinterface. |
| **Step 4** | **pvc** *vpi/vci*<br>**Example:**<br>`RP/0/RSP0/CPU0:router (config-subif)# pvc 5/10` | (Optional) Creates an ATM permanent virtual circuit (PVC) and enters ATM PVC configuration submode.<br>**Note** • Only one PVC is allowed per subinterface. |
| **Step 5** | **end** or **commit**<br>**Example:**<br>`RP/0/RSP0/CPU0:router (config-subif)# end`<br>or<br>`RP/0/RSP0/CPU0:router(config-subif)# commit` | Saves configuration changes.<br>• When you issue the **end** command, the system prompts you to commit changes:<br>`Uncommitted changes found, commit them before exiting(yes/no/cancel)? [cancel]:` |

| | Command or Action | Purpose |
|---|---|---|
| | | • Entering **yes** saves configuration changes to the running configuration file, exits the configuration session, and returns the router to EXEC mode.<br>• Entering **no** exits the configuration session and returns the router to EXEC mode without committing the configuration changes.<br>• Entering **cancel** leaves the router in the current configuration session without exiting or committing the configuration changes.<br>• Use the **commit** command to save the configuration changes to the running configuration file and remain within the configuration session.<br><br>Repeat Step 1 through Step 5 to bring up the ATM subinterface and any associated PVC at the other end of the connection.<br><br>Brings up the ATM connection.<br><br>**Note** • The configuration on both ends of the subinterface connection must match. |

### What to do next

To configure optional PVC parameters, see the "Configuring Optional Point-to-Point ATM PVC Parameters" section on page 30.

To attach Layer 3 service policies, such as Multiprotocol Label Switching (MPLS) or quality of service (QoS), to the PVC under the PVC submode, refer to the appropriate Cisco IOS XR software configuration guide.

To configure a vc-class and apply it to an ATM subinterface or PVC, see the "Creating and Configuring a VC-Class" section.

# Configuring Optional Point-to-Point ATM PVC Parameters

This task describes the commands you can use to modify the default configuration on an ATM PVC.

Before you can modify the default PVC configuration, you must create the PVC on an ATM subinterface, as described in the Creating a Point-to-Point ATM Subinterface with a PVC.

**Restrictions**

The configuration on both ends of the PVC must match for the connection to be active.

## SUMMARY STEPS

1. **configure**
2. **interface atm** *interface-path-id.subinterface* **point-to-point**
3. **pvc** *vpi/vci*

4. **encapsulation** {**aal5mux ipv4** | **aal5nlpid** | **aal5snap**}
5. **oam-pvc manage** [*frequency*] [**disable**] [**keep-vc-up** [**seg-aisrdi-failure**]
6. **oam ais-rdi** [*down-count* [*up-count*]]
7. **oam retry** [*up-count* [*down-count* [*retry-frequency*]]]
8. **shape** [**cbr** *peak_output_rate* | **ubr** *peak_output_rate*| **vbr-nrt** *peak_output_rate sustained_output_rate burst_size*| **vbr-rt** *peak_output_rate sustained_output_rate burst_size*]
9. **service-policy** [**input** | **output**] *policy_name*
10. **end** or **commit**
11. Repeat Step 1 through Step 10 to configure the PVC at the other end of the connection.

## DETAILED STEPS

| | Command or Action | Purpose |
|---|---|---|
| **Step 1** | **configure**<br>**Example:**<br>`RP/0/RSP0/CPU0:router# configure` | Enters global configuration mode. |
| **Step 2** | **interface atm** *interface-path-id.subinterface* **point-to-point**<br>**Example:**<br>`RP/0/RSP0/CPU0:router (config)# interface atm 0/6/0/1.10 point-to-point` | Enters ATM subinterface configuration mode. |
| **Step 3** | **pvc** *vpi/vci*<br>**Example:**<br>`RP/0/RSP0/CPU0:router (config-subif)# pvc 5/10` | Enters subinterface configuration mode for the PVC. |
| **Step 4** | **encapsulation** {**aal5mux ipv4** \| **aal5nlpid** \| **aal5snap**}<br>**Example:**<br>`RP/0/RSP0/CPU0:router (config-atm-vc)# encapsulation aal5snap` | Configures the ATM adaptation layer (AAL) and encapsulation type for a PVC.<br>**Note** The default encapsulation type for a vc-class is AAL5/SNAP |
| **Step 5** | **oam-pvc manage** [*frequency*] [**disable**] [**keep-vc-up** [**seg-aisrdi-failure**]<br>**Example:**<br>`RP/0/RSP0/CPU0:router (config-atm-vc)# oam-pvc manage 200 keep-vc-up` | Enable ATM OAM F5 loopback cell generation and configures continuity check (CC) management for the ATM permanent virtual circuit (PVC).<br>• Include the **disable** keyword to disable OAM management on the specified PVC.<br>• Include the **keep-vc-up** keyword specify that PVC remains in the UP state when CC cells detect connectivity failure.<br>• Include the **seg-aisrdi-failure** keyword to specify that, if segment AIS/RDI cells are received, the VC |

| | Command or Action | Purpose |
|---|---|---|
| | | will not be brought down because of end CC failure or loopback failure. |
| **Step 6** | **oam ais-rdi** [*down-count* [*up-count*]]<br>**Example:**<br>`RP/0/RSP0/CPU0:router (config-atm-vc)# oam ais-rdi 25 5` | Configures the PVC so that it is brought down after a specified number of OAM alarm indication signal/remote defect indication (AIS/RDI) cells are received on the associated PVC. |
| **Step 7** | **oam retry** [*up-count* [*down-count* [*retry-frequency*]]]<br>**Example:**<br>`RP/0/RSP0/CPU0:router (config-atm-vc)# oam retry 5 10 5` | Configures parameters related to OAM management for the PVC.<br>If no OAM AIS/RDI cells are received within the specified interval, the PVC is brought up. |
| **Step 8** | **shape** [**cbr** *peak_output_rate* \| **ubr** *peak_output_rate*\| **vbr-nrt** *peak_output_rate sustained_output_rate burst_size*\| **vbr-rt** *peak_output_rate sustained_output_rate burst_size*]<br>**Example:**<br>`RP/0/RSP0/CPU0:router (config-atm-vc)# shape vbr-nrt 100000 100000 8000` | Configures ATM traffic shaping for the PVC.<br>You must estimate how much bandwidth is required before you configure ATM traffic shaping.<br>• *peak_output_rate*—Configures the maximum cell rate that is always available for the traffic.<br>• *Sustained_output_rate*—Sustained output rate for the bit rate.<br>• *burst size*—Burst cell size for the bit rate. Range is from 1 through 8192. |
| **Step 9** | **service-policy** [**input** \| **output**] *policy_name*<br>**Example:**<br>`RP/0/RSP0/CPU0:router (config-atm-vc)# service-policy input policyA` | Attaches a QoS policy to an input or output PVC. Replace *policy_name* with the name of the service policy you want to attach to the PVC.<br>**Note** For information on creating and configuring service policies, see the *Cisco IOS XR Modular Quality of Service Configuration Guide.* |
| **Step 10** | **end** or **commit**<br>**Example:**<br>`RP/0/RSP0/CPU0:router (config-subif)# end`<br>or<br>`RP/0/RSP0/CPU0:router(config-subif)# commit` | Saves configuration changes.<br>• When you issue the **end** command, the system prompts you to commit changes:<br>`Uncommitted changes found, commit them before exiting(yes/no/cancel)? [cancel]:`<br>Entering **yes** saves configuration changes to the running configuration file, exits the configuration session, and returns the router to EXEC mode.<br>Entering **no** exits the configuration session and returns the router to EXEC mode without committing the configuration changes. |

| | Command or Action | Purpose |
|---|---|---|
| | | Entering **cancel** leaves the router in the current configuration session without exiting or committing the configuration changes.<br><br>Use the **commit** command to save the configuration changes to the running configuration file and remain within the configuration session. |
| **Step 11** | Repeat Step 1 through Step 10 to configure the PVC at the other end of the connection. | Brings up the connection.<br><br>**Note** The configuration on both ends of the connection must match. |

### What to do next

- To attach Layer 3 service policies, such as MPLS or QoS, to the PVC under the PVC submode, refer to the appropriate Cisco IOS XR software configuration guide.
- To configure a vc-class and apply it to an ATM subinterface or PVC, see the "Creating and Configuring a VC-Class" section.

# How to Create and Configure a VP-Tunnel

The configuration tasks for creating and configuring an ATM vp-tunnel are described in the following procedures:

**Note** VP-tunnels are specific to point-to-point ATM interfaces and cannot be configured on ATM ACs.

# Creating and Configuring a VP-Tunnel on an ATM Interface

The procedures in this section create a vp-tunnel on a point-to-point ATM main interface. The creation and configuration of a vp-tunnel is a four-step process:

The procedure in this section creates a vp-tunnel on an ATM main interface.

### Before you begin

Before you can create a vp-tunnel on an ATM main interface, you must bring up an ATM interface, as described in the Bringing Up an ATM Interface.

**Restrictions**

- A vp-tunnel is not truly active until a PVC is created with the same VPI value as the vp-tunnel, as described in the Creating and Configuring Subinterfaces with PVCs on a VP-tunnel.
- When a vp-tunnel goes down, all VCs that are configured under that vp-tunnel go down.
- The following cards do not support vp-tunnels with a VPI of 0:

- 4-Port OC-3c/STM-1c ATM ISE Line Card, multimode
- 4-Port OC-3c/STM-1c ATM ISE Line Card, single-mode
- 4-port OC-12/STM-4 ATM multimode ISE line card with SC connector
- Series 4-port OC-12/STM-4 ATM single-mode, intermediate-reach ISE line card with SC Connector

## SUMMARY STEPS

1. **configure**
2. **interface atm** *interface-path-id*
3. **vp-tunnel** *vpi*
4. **f4oam disable**
5. **shape** [**cbr** *peak_output_rate* | **vbr-nrt** *peak_output_rate sustained_output_rate burst_size* | **vbr-rt** *peak_output_rate sustained_output_rate burst_size*]
6. **end** or **commit**
7. **exit**
8. **exit**
9. **show atm vp-tunnel interface atm** [*interface-path-id*]

## DETAILED STEPS

| | Command or Action | Purpose |
|---|---|---|
| **Step 1** | **configure**<br>**Example:**<br>`RP/0/RSP0/CPU0:router# configure` | Enters global configuration mode. |
| **Step 2** | **interface atm** *interface-path-id*<br>**Example:**<br>`RP/0/RSP0/CPU0:router (config)# interface atm 0/6/0/1` | Enters ATM interface configuration mode. |
| **Step 3** | **vp-tunnel** *vpi*<br>**Example:**<br>`RP/0/RSP0/CPU0:router (config)# vp-tunnel 10` | Configures a vp-tunnel on an ATM interface. |
| **Step 4** | **f4oam disable**<br>**Example:**<br>`RP/0/RSP0/CPU0:router(config-atm-vp-tunnel)# f4oam disable` | (Optional) Disables the passing of OAM packets. |
| **Step 5** | **shape** [**cbr** *peak_output_rate* \| **vbr-nrt** *peak_output_rate sustained_output_rate burst_size* \| **vbr-rt** *peak_output_rate sustained_output_rate burst_size*] | Configures ATM traffic shaping for the PVC.<br>You must estimate how much bandwidth is required before you configure ATM traffic shaping. |

| | Command or Action | Purpose |
|---|---|---|
| | **Example:**<br>`RP/0/RSP0/CPU0:router (config-if)# shape` | • *peak_output_rate*—Configures the maximum cell rate that is always available for the traffic.<br>• *Sustained_output_rate*—Sustained output rate for the bit rate.<br>• *burst size*—Burst cell size for the bit rate. Range is from 1 through 8192.<br>**Note** • After you configure traffic shaping on the vp-tunnel, you cannot configure traffic shaping directly on the PVCs configured under that vp-tunnel. If you attempt to use the **shape** command on a PVC that is configured under a tunnel, the command is rejected. |
| **Step 6** | **end** or **commit**<br>**Example:**<br>`RP/0/RSP0/CPU0:router (config-if)# end`<br>or<br>`RP/0/RSP0/CPU0:router(config-if)# commit` | Saves configuration changes.<br>• When you issue the **end** command, the system prompts you to commit changes:<br>`Uncommitted changes found, commit them before exiting(yes/no/cancel)? [cancel]:`<br>• Entering **yes** saves configuration changes to the running configuration file, exits the configuration session, and returns the router to EXEC mode.<br>• Entering **no** exits the configuration session and returns the router to EXEC mode without committing the configuration changes.<br>• Entering **cancel** leaves the router in the current configuration session without exiting or committing the configuration changes.<br>• Use the **commit** command to save the configuration changes to the running configuration file and remain within the configuration session. |
| **Step 7** | **exit**<br>**Example:**<br>`RP/0/RSP0/CPU0:router (config-if)# exit` | Exits interface configuration mode and enters global configuration mode. |
| **Step 8** | **exit**<br>**Example:** | Exits global configuration mode and enters EXEC mode.<br>Repeat Step 1 through Step 8 to bring up the vp-tunnel at the other end of the connection. |

| | Command or Action | Purpose |
|---|---|---|
| | `RP/0/RSP0/CPU0:router (config)# exit` | Brings up the vp-tunnel. |
| **Step 9** | **show atm vp-tunnel interface atm** [*interface-path-id*]<br>**Example:**<br>`RP/0/RSP0/CPU0:router (config)# show atm vp-tunnel interface atm 0/6/0/1` | Displays vp-tunnel information for the entire router or a specific ATM interface. |

To attach Layer 3 service policies, such as MPLS or QoS, to the vp-tunnel or its PVCs, refer to the appropriate Cisco IOS XR Software configuration guide.

# Creating and Configuring Subinterfaces with PVCs on a VP-tunnel

The procedure in this section creates and configures a subinterface with a PVC on a vp-tunnel.

**Note** A vp-tunnel is not truly active until a PVC is created with the same VPI value as the vp-tunnel.

### Before you begin

Before you can create a subinterface with a PVC on an ATM vp-tunnel, you must create a vp-tunnel on the ATM main interface, as described in the Creating and Configuring a VP-Tunnel on an ATM Interface.

**Restrictions**

- A PVC and its host vp-tunnel must share the same VPI for the connection to be active.
- The following cards do not support vp-tunnels with a VPI of 0:
  - 4-Port OC-3c/STM-1c ATM ISE Line Card, multimode
  - 4-Port OC-3c/STM-1c ATM ISE Line Card, single-mode
  - 4-port OC-12/STM-4 ATM multimode ISE line card with SC connector
  - Series 4-port OC-12/STM-4 ATM single-mode, intermediate-reach ISE line card with SC Connector

## SUMMARY STEPS

1. **configure**
2. **interface atm** *interface-path-id.subinterface* **point-to-point**
3. **ipv4 address** *ipv4_address/prefix*
4. **pvc** *vpi/vci*
5. **end** or **commit**
6. **ping atm interface atm** *interface-path-id.subinterface vpi/vci* RP/0/RSP0/CPU0:router # ping atm interface atm 0/2/0/0.10 10/100
7. **show atm vp-tunnel** [**interface atm** *interface-path-id*]

## DETAILED STEPS

| | Command or Action | Purpose |
|---|---|---|
| **Step 1** | **configure**<br>**Example:**<br>`RP/0/RSP0/CPU0:router# configure` | Enters global configuration mode. |
| **Step 2** | **interface atm** *interface-path-id.subinterface* **point-to-point**<br>**Example:**<br>`RP/0/RSP0/CPU0:router (config)# interface atm 0/6/0/1.10 point-to-point` | Creates a new subinterface and enters ATM subinterface configuration mode for that subinterface. |
| **Step 3** | **ipv4 address** *ipv4_address/prefix*<br>**Example:**<br>`RP/0/RSP0/CPU0:router (config-subif)#ipv4 address 10.46.8.6/24` | Assigns an IP address and subnet mask to the subinterface. |
| **Step 4** | **pvc** *vpi/vci*<br>**Example:**<br>`RP/0/RSP0/CPU0:router (config-subif)# pvc 5/10` | Creates an ATM permanent virtual circuit (PVC) on the subinterface and attaches it to the vp-tunnel you created in the Creating and Configuring a VP-Tunnel on an ATM Interface.<br>Replace *vpi* with the VPI of the vp-tunnel on which you are creating the PVC.<br>**Note** • The PVC VPI and vp-tunnel VCI must match or the connection will not be active.<br>• A vp-tunnel is not usable until you create PVCs under it. |
| **Step 5** | **end** or **commit**<br>**Example:**<br>`RP/0/RSP0/CPU0:router (config-subif)# end`<br>or<br>`RP/0/RSP0/CPU0:router(config-subif)# commit` | Saves configuration changes.<br>• When you issue the **end** command, the system prompts you to commit changes:<br>`Uncommitted changes found, commit them before exiting(yes/no/cancel)? [cancel]:`<br>• Entering **yes** saves configuration changes to the running configuration file, exits the configuration session, and returns the router to EXEC mode.<br>• Entering **no** exits the configuration session and returns the router to EXEC mode without committing the configuration changes. |

| | Command or Action | Purpose |
|---|---|---|
| | | • Entering **cancel** leaves the router in the current configuration session without exiting or committing the configuration changes.<br>• Use the **commit** command to save the configuration changes to the running configuration file and remain within the configuration session.<br><br>Repeat Step 1 through Step5 to bring up the subinterface and PVC at the other end of the vp-tunnel.<br><br>Brings up the subinterface and PVC. |
| **Step 6** | **ping atm interface atm** *interface-path-id.subinterface vpi/vci* RP/0/RSP0/CPU0:router # ping atm interface atm 0/2/0/0.10 10/100 | Verifies connectivity between two ATM connection endpoints through the vp-tunnel you configured in Step 1 through Step 6.<br>• Replace *interface-path-id.subinterface* with the ATM subinterface that is configured on the vp-tunnel whose connectivity you want to verify. This is the same *interface-path-id.subinterface* you configured in Step 2.<br>• Replace *vci* with the VCI of the PVC configured on the vp-tunnel whose connectivity you want to verify. This is the same *vci* you configured in Step 4.<br>• Replace *vpi* with the VPI of the PVC that is configured on the vp-tunnel whose connectivity you want to verify. This is the same *vpi* you configured in Step 4. |
| **Step 7** | **show atm vp-tunnel** [**interface atm** *interface-path-id*]<br>**Example:**<br>`RP/0/RSP0/CPU0:router (config)# show atm vp-tunnel interface atm 0/6/0/1` | Displays vp-tunnel information for the entire router or a specific ATM interface. |

### What to do next

To create and configure ATM subinterfaces and PVCs on a vp-tunnel, see the “Creating and Configuring Subinterfaces with PVCs on a VP-tunnel” section on page 35

To configure a vc-class and apply it to an ATM interface, see the “Creating and Configuring a VC-Class” section on page 50.

# How to Configure a Layer 2 Attachment Circuit

The Layer 2 AC configuration tasks are described in these procedures:

**Note** After you configure an interface for Layer 2 switching, no routing commands such as **ipv4 address** are permissible. If any routing commands are configured on the interface, then the **l2transport** command is rejected.

# Creating a Layer 2 Port Mode AC

The procedure in this section creates a Layer 2 port mode AC.

### Before you begin

Before you can create a Layer 2 port mode AC, you must bring up an ATM main interface, as described in the Bringing Up an ATM Interface.

### Restrictions

ILMI configuration is not supported on Layer 2 port mode ACs. Before you can configure an Layer 2 port mode AC, you must ensure that no configuration, such as subinterfaces, already exists on that port. If any preconfiguration does exist, you must remove it.

## SUMMARY STEPS

1. **configure**
2. **interface atm** *interface-path-id*
3. **l2transport**
4. **end** or **commit**

## DETAILED STEPS

| | Command or Action | Purpose |
|---|---|---|
| **Step 1** | **configure**<br>**Example:**<br>`RP/0/RSP0/CPU0:router# configure` | Enters global configuration mode. |
| **Step 2** | **interface atm** *interface-path-id*<br>**Example:**<br>`RP/0/RSP0/CPU0:router (config)# interface atm 0/6/0/1` | Enters interface configuration mode for an ATM interface. |
| **Step 3** | **l2transport**<br>**Example:**<br>`RP/0/RSP0/CPU0:router (config-if)# l2transport` | Enters ATM Layer 2 transport configuration mode, and enables Layer 2 port mode on this ATM interface. |
| **Step 4** | **end** or **commit**<br>**Example:** | Saves configuration changes. |

| | Command or Action | Purpose |
|---|---|---|
| | `RP/0/RSP0/CPU0:router (config-if-l2)# end`<br>or<br>`RP/0/RSP0/CPU0:router(config-if-l2)# commit` | • When you issue the **end** command, the system prompts you to commit changes:<br>`Uncommitted changes found, commit them before exiting(yes/no/cancel)? [cancel]:`<br>• Entering **yes** saves configuration changes to the running configuration file, exits the configuration session, and returns the router to EXEC mode.<br>• Entering **no** exits the configuration session and returns the router to EXEC mode without committing the configuration changes.<br>• Entering **cancel** leaves the router in the current configuration session without exiting or committing the configuration changes.<br>• Use the **commit** command to save the configuration changes to the running configuration file and remain within the configuration session.<br>Repeat Step 1 through Step 4 to bring up the Layer 2 port mode AC at the other end of the connection.<br>Brings up the Layer 2 port mode AC.<br>**Note** • The configuration on both ends of the connection must match. |

### What to do next

To configure a point-to-point pseudowire XConnect on the Layer 2 port mode AC you just created, see the Implementing MPLS Layer 2 VPNs module of Cisco IOS XR Multiprotocol Label Switching Configuration Guide.

To configure optional Layer 2 VPN parameters for the ATM AC, see the “Configuring Optional Parameters on a Layer 2 Port Mode AC” section on page 39.

# Configuring Optional Parameters on a Layer 2 Port Mode AC

The procedure in this section configures optional Layer 2 VPN transport parameters on a Layer 2 port mode AC.

### Before you begin

Before you can configure Layer 2 VPN parameters on a Layer 2 port mode AC, you must create a Layer 2 port mode AC, as described in the Creating a Layer 2 Port Mode AC.

## SUMMARY STEPS

1. **configure**
2. **interface atm** *interface-path-id*
3. **atm mcpt-timers** *timer-1 timer-2 timer-3*
4. **l2transport**
5. **cell-packing** *cells timer* RP/0/RSP0/CPU0:router (config-if-l2)# cell-packing 6 1
6. **end** or **commit**

## DETAILED STEPS

| | Command or Action | Purpose |
|---|---|---|
| **Step 1** | **configure**<br>**Example:**<br>`RP/0/RSP0/CPU0:router# configure` | Enters global configuration mode. |
| **Step 2** | **interface atm** *interface-path-id*<br>**Example:**<br>`RP/0/RSP0/CPU0:router (config)# interface atm 0/6/0/1` | Enters interface configuration mode for an ATM interface. |
| **Step 3** | **atm mcpt-timers** *timer-1 timer-2 timer-3*<br>**Example:**<br>`RP/0/RSP0/CPU0:router (config-if)# atm mcpt-timers 50 100 200` | Specifies the maximum cell packing timeout values for each of the three per-interface MCPT timers, in microseconds.<br>**Note** • The default value for each timer is 50 microseconds. |
| **Step 4** | **l2transport**<br>**Example:**<br>`RP/0/RSP0/CPU0:router (config-if)# l2transport` | Enters ATM Layer 2 transport configuration mode. |
| **Step 5** | **cell-packing** *cells timer* RP/0/RSP0/CPU0:router (config-if-l2)# cell-packing 6 1 | Sets the maximum number of cells allowed per packet, and specifies a maximum cell packing timeout (MCPT) timer to use for cell packing.<br>• Replace *cells* with the maximum number of cells to use per packet. Range is from 2 through 86.<br>• Replace *timer* with the number that indicates the appropriate MCPT timer to use for cell packing. Can be **1**, **2**, or **3**. You can configure up to three different MCPT values for a single main interface. |
| **Step 6** | **end** or **commit**<br>**Example:**<br>`RP/0/RSP0/CPU0:router (config-if-l2)# end` | Saves configuration changes.<br>• When you issue the **end** command, the system prompts you to commit changes: |

| | Command or Action | Purpose |
|---|---|---|
| | or<br><br>`RP/0/RSP0/CPU0:router(config-if-l2)# commit` | `Uncommitted changes found, commit them before exiting(yes/no/cancel)? [cancel]:`<br>• Entering **yes** saves configuration changes to the running configuration file, exits the configuration session, and returns the router to EXEC mode.<br>• Entering **no** exits the configuration session and returns the router to EXEC mode without committing the configuration changes.<br>• Entering **cancel** leaves the router in the current configuration session without exiting or committing the configuration changes.<br>• Use the **commit** command to save the configuration changes to the running configuration file and remain within the configuration session.<br><br>Repeat Step 1 through Step 6 to configure the AC at the other end of the connection.<br><br>Brings up the Layer 2 port mode AC.<br><br>**Note** • The configuration on both ends of the connection must match. |

# Creating an ATM Layer 2 Subinterface with a PVC

The procedure in this section creates a Layer 2 subinterface with a PVC.

### Before you begin

Before you can create a subinterface on an ATM interface, you must bring up an ATM interface, as described in the Bringing Up an ATM Interface.

### Restrictions

Only one PVC can be configured for each ATM subinterface.

## SUMMARY STEPS

1. **configure**
2. **interface atm** *interface-path-id.subinterface* **l2transport**
3. **pvc** *vpi/vci*
4. **end** or **commit**

## DETAILED STEPS

| | Command or Action | Purpose |
|---|---|---|
| **Step 1** | **configure**<br>**Example:**<br>`RP/0/RSP0/CPU0:router# configure` | Enters global configuration mode. |
| **Step 2** | **interface atm** *interface-path-id.subinterface* **l2transport**<br>**Example:**<br>`RP/0/RSP0/CPU0:router(config)# interface atm 0/6/0/1.10 l2transport` | Creates a subinterface and enters ATM subinterface configuration mode for that subinterface. |
| **Step 3** | **pvc** *vpi/vci*<br>**Example:**<br>`RP/0/RSP0/CPU0:router(config-if)# pvc 5/20` | Creates an ATM permanent virtual circuit (PVC) and enters ATM Layer 2 transport PVC configuration mode.<br>**Note** • Only one PVC is allowed per subinterface. |
| **Step 4** | **end** or **commit**<br>**Example:**<br>`RP/0/RSP0/CPU0:router(config-atm-l2transport-pvc)# end`<br>or<br>`RP/0/RSP0/CPU0:router(config-atm-l2transport-pvc)# commit` | Saves configuration changes.<br>• When you issue the **end** command, the system prompts you to commit changes:<br>`Uncommitted changes found, commit them before exiting(yes/no/cancel)? [cancel]:`<br>• Entering **yes** saves configuration changes to the running configuration file, exits the configuration session, and returns the router to EXEC mode.<br>• Entering **no** exits the configuration session and returns the router to EXEC mode without committing the configuration changes.<br>• Entering **cancel** leaves the router in the current configuration session without exiting or committing the configuration changes.<br>• Use the **commit** command to save the configuration changes to the running configuration file and remain within the configuration session.<br>Repeat Step 1 through Step 4 to bring up the ATM subinterface and any associated PVC at the other end of the AC.<br>Brings up the AC.<br>**Note** • The configuration on both ends of the AC must match. |

### What to do next

To configure optional PVC parameters, see the "Configuring Optional ATM Layer 2 PVC Parameters" section on page 43.

To configure a vc-class and apply it to the PVC, see the"Attaching a VC-Class to a PVC on an ATM Subinterface" section on page 55.

To configure a point-to-point pseudowire XConnect on the AC you just created, see the Implementing MPLS Layer 2 VPNs module of Cisco IOS XR Multiprotocol Label Switching Configuration Guide.

# Configuring Optional ATM Layer 2 PVC Parameters

This task describes the commands you can use to modify the default configuration on an ATM Layer 2 PVC.

### Before you begin

Before you can modify the default PVC configuration, you must create the PVC on a Layer 2 ATM subinterface, as described in the Creating an ATM Layer 2 Subinterface with a PVC.

**Restrictions**

The configuration on both ends of the PVC must match for the connection to be active.

## SUMMARY STEPS

1. **configure**
2. **interface atm** *interface-path-id.subinterface* **l2transport**
3. **pvc** *vpi/vci*
4. **encapsulation** {**aal0** | **aal5**}
5. **cell-packing** *cells timer*
6. **shape** [**cbr** *peak_output_rate* | **ubr** *peak_output_rate*| **vbr-nrt** *peak_output_rate sustained_output_rate burst_size*| **vbr-rt** *peak_output_rate sustained_output_rate burst_size*]
7. **end** or **commit**

## DETAILED STEPS

| | Command or Action | Purpose |
|---|---|---|
| **Step 1** | **configure**<br>**Example:**<br>`RP/0/RSP0/CPU0:router# configure` | Enters global configuration mode. |
| **Step 2** | **interface atm** *interface-path-id.subinterface* **l2transport**<br>**Example:**<br>`RP/0//CPU0:router(config-if)# interface atm 0/6/0/1.10 l2transport` | Enters ATM subinterface configuration mode for a Layer 2 ATM subinterface. |
| **Step 3** | **pvc** *vpi/vci*<br>**Example:** | Enters ATM Layer 2 transport PVC configuration mode for the specified PVC. |

| | Command or Action | Purpose |
|---|---|---|
| | `RP/0/RSP0/CPU0:router(config-atm-l2transport-pvc)# pvc 5/20` | |
| **Step 4** | **encapsulation** {**aal0** \| **aal5**}<br>**Example:**<br>`RP/0/RSP0/CPU0:router(config-atm-l2transport-pvc)# encapsulation aal5` | Configures the ATM adaptation layer (AAL) and encapsulation type for a PVC.<br>**Note** • The default encapsulation type for a PVC is AAL5. |
| **Step 5** | **cell-packing** *cells timer*<br>**Example:**<br>`RP/0/RSP0/CPU0:router(config-atm-l2transport-pvc)# cell-packing 5 2` | Sets the maximum number of cells allowed per packet, and specifies a maximum cell packing timeout (MCPT) timer to use for cell packing.<br>• Replace *cells* with the maximum number of cells to use per packet. Range is from 2 through 86.<br>• Replace *timer* with the number that indicates the appropriate MCPT timer to use for cell packing. Can be **1**, **2**, or **3**. You can configure up to three different MCPT values for a single main interface. |
| **Step 6** | **shape** [**cbr** *peak_output_rate* \| **ubr** *peak_output_rate*\| **vbr-nrt** *peak_output_rate sustained_output_rate burst_size*\| **vbr-rt** *peak_output_rate sustained_output_rate burst_size*]<br>**Example:**<br>`RP/0/RSP0/CPU0:router(config-atm-l2transport-pvc)# shape vbr-nrt 100000 100000 8000` | Configures ATM traffic shaping for the PVC.<br>You must estimate how much bandwidth is required before you configure ATM traffic shaping.<br>• *peak_output_rate*—Configures the maximum cell rate that is always available for the traffic.<br>• *Sustained_output_rate*—Sustained output rate for the bit rate.<br>• *burst size*—Burst cell size for the bit rate. Range is from 1 through 8192. |
| **Step 7** | **end** or **commit**<br>**Example:**<br>`RP/0/RSP0/CPU0:router(config-atm-l2transport-pvc)# end`<br>or<br>`RP/0/RSP0/CPU0:router(config-atm-l2transport-pvc)# commit` | Saves configuration changes.<br>• When you issue the **end** command, the system prompts you to commit changes:<br>`Uncommitted changes found, commit them before exiting(yes/no/cancel)? [cancel]:`<br>• Entering **yes** saves configuration changes to the running configuration file, exits the configuration session, and returns the router to EXEC mode.<br>• Entering **no** exits the configuration session and returns the router to EXEC mode without committing the configuration changes. |

| | Command or Action | Purpose |
|---|---|---|
| | | • Entering **cancel** leaves the router in the current configuration session without exiting or committing the configuration changes.<br><br>Use the **commit** command to save the configuration changes to the running configuration file and remain within the configuration session.<br><br>Repeat Step 1 through Step 7 to configure the PVC at the other end of the AC.<br><br>Brings up the AC.<br><br>**Note** • The configuration on both ends of the connection must match. |

### What to do next

To configure a pseudo-wire XConnect on the AC you just created, see the Implementing MPLS Layer 2 VPNs module of Cisco IOS XR Multiprotocol Label Switching Configuration Guide.

To configure a vc-class and apply it to the PVC, see the“Attaching a VC-Class to a PVC on an ATM Subinterface” section on page 54.

# Creating an ATM Layer 2 Subinterface with a PVP

The procedure in this section creates an ATM Layer 2 subinterface with a permanent virtual path (PVP) on that ATM subinterface.

### Before you begin

Before you can create a subinterface with a PVP on an ATM interface, you must bring up an ATM interface, as described in the Bringing Up an ATM Interface.

**Restrictions**

- Only one PVP can be configured for each L2VPN ATM AC.
- F4 OAM emulation is not supported on Layer 2 PVPs.

## SUMMARY STEPS

1. **configure**
2. **interface atm** *interface-path-id.subinterface* **l2transport**
3. **pvp** *vpi*
4. **end** or **commit**

## DETAILED STEPS

| | Command or Action | Purpose |
|---|---|---|
| **Step 1** | **configure**<br>**Example:**<br>`RP/0/RSP0/CPU0:router# configure` | Enters global configuration mode. |
| **Step 2** | **interface atm** *interface-path-id.subinterface* **l2transport**<br>**Example:**<br>`RP/0/RSP0/CPU0:router(config)# interface atm 0/6/0/1.10 l2transport` | Creates an ATM subinterface and enters ATM layer2 transport configuration mode for that subinterface. |
| **Step 3** | **pvp** *vpi*<br>**Example:**<br>`RP/0/RSP0/CPU0:router(config-if)# pvp 100` | (Optional) Creates an ATM PVP and enters ATM PVP configuration submode.<br>**Note** • Only one PVP is allowed per subinterface. |
| **Step 4** | **end** or **commit**<br>**Example:**<br>`RP/0/RSP0/CPU0:router(config-atm-l2transport-pvp)# end`<br>or<br>`RP/0/RSP0/CPU0:router(config-atm-l2transport-pvp)# commit` | Saves configuration changes.<br>• When you issue the **end** command, the system prompts you to commit changes:<br>`Uncommitted changes found, commit them before exiting(yes/no/cancel)? [cancel]:`<br>• Entering **yes** saves configuration changes to the running configuration file, exits the configuration session, and returns the router to EXEC mode.<br>• Entering **no** exits the configuration session and returns the router to EXEC mode without committing the configuration changes.<br>• Entering **cancel** leaves the router in the current configuration session without exiting or committing the configuration changes.<br>• Use the **commit** command to save the configuration changes to the running configuration file and remain within the configuration session.<br>Repeat Step 1 through Step 4 to bring up the ATM subinterface and any associated PVP at the other end of the AC.<br>Brings up the ATM AC.<br>**Note** • The configuration on both ends of the AC connection must match. |

### What to do next

To configure optional PVP parameters, see the "Configuring Optional ATM Layer 2 PVP Parameters" section on page 46.

To configure a point-to-point pseudowire XConnect on the AC you just created, see the Implementing MPLS Layer 2 VPNs module of Cisco IOS XR Multiprotocol Label Switching Configuration Guide.

# Configuring Optional ATM Layer 2 PVP Parameters

This task describes the commands you can use to modify the default configuration on an ATM Layer 2 PVP.

### Before you begin

Before you can modify the default PVP configuration, you must create the PVP on an ATM subinterface, as described in the Creating an ATM Layer 2 Subinterface with a PVP.

## SUMMARY STEPS

1. **configure**
2. **interface atm** *interface-path-id.subinterface* **l2transport**
3. **pvp** *vpi*
4. **cell-packing** *cells timer*
5. **shape** [**cbr** *peak_output_rate* | **ubr** *peak_output_rate*| **vbr-nrt** *peak_output_rate sustained_output_rate burst_size*| **vbr-rt** *peak_output_rate sustained_output_rate burst_size*]
6. **end** or **commit**

## DETAILED STEPS

| | Command or Action | Purpose |
|---|---|---|
| **Step 1** | **configure**<br>**Example:**<br>`RP/0/RSP0/CPU0:router# configure` | Enters global configuration mode. |
| **Step 2** | **interface atm** *interface-path-id.subinterface* **l2transport**<br>**Example:**<br>`RP/0/RSP0/CPU0:router(config)# interface atm 0/6/0/1.10 l2transport` | Enters ATM subinterface configuration mode. |
| **Step 3** | **pvp** *vpi*<br>**Example:**<br>`RP/0/RSP0/CPU0:router(config-if)# pvp 10` | Enters subinterface configuration mode for the PVP. |

| | Command or Action | Purpose |
|---|---|---|
| **Step 4** | **cell-packing** *cells timer*<br>**Example:**<br>`RP/0/RSP0/CPU0:router(config-atm-l2transport-pvp)# cell-packing 5 2` | Sets the maximum number of cells allowed per packet, and specifies a maximum cell packing timeout (MCPT) timer to use for cell packing.<br>• Replace *cells* with the maximum number of cells to use per packet. Range is from 2 through 86.<br>• Replace *timer* with the number that indicates the appropriate MCPT timer to use for cell packing. Can be **1**, **2**, or **3**. You can configure up to three different MCPT values for a single main interface. |
| **Step 5** | **shape** [**cbr** *peak_output_rate* \| **ubr** *peak_output_rate*\| **vbr-nrt** *peak_output_rate sustained_output_rate burst_size*\| **vbr-rt** *peak_output_rate sustained_output_rate burst_size*]<br>**Example:**<br>`RP/0/RSP0/CPU0:router(config-atm-l2transport-pvp)# shape vbr-nrt 100000 100000 8000` | Configures ATM traffic shaping for the PVC.<br>You must estimate how much bandwidth is required before you configure ATM traffic shaping.<br>• *peak_output_rate*—Configures the maximum cell rate that is always available for the traffic.<br>• *Sustained_output_rate*—Sustained output rate for the bit rate.<br>• *burst size*—Burst cell size for the bit rate. Range is from 1 through 8192. |
| **Step 6** | **end** or **commit**<br>**Example:**<br>`RP/0/RSP0/CPU0:router(config-atm-l2transport-pvp)# end`<br>or<br>`RP/0/RSP0/CPU0:router(config-atm-l2transport-pvp)# commit` | Saves configuration changes.<br>• When you issue the **end** command, the system prompts you to commit changes:<br>`Uncommitted changes found, commit them before exiting(yes/no/cancel)? [cancel]:`<br>• Entering **yes** saves configuration changes to the running configuration file, exits the configuration session, and returns the router to EXEC mode.<br>• Entering **no** exits the configuration session and returns the router to EXEC mode without committing the configuration changes.<br>• Entering **cancel** leaves the router in the current configuration session without exiting or committing the configuration changes.<br>Use the **commit** command to save the configuration changes to the running configuration file and remain within the configuration session.<br>Repeat Step 1 through Step 6 to configure the PVP at the other end of the AC. |

| | Command or Action | Purpose |
|---|---|---|
| | | Brings up the AC.<br>**Note** • The configuration on both ends of the AC connection must match. |

To configure a point-to-point pseudowire XConnect on the AC you just created, see the Implementing MPLS Layer 2 VPNs module of Cisco IOS XR Multiprotocol Label Switching Configuration Guide.

# How to Create and Configure a VC-Class

The configuration tasks for creating and configuring an ATM VC-Class are described in these procedures:

# Creating and Configuring a VC-Class

This section describes the tasks and commands required to create a virtual circuit (VC) class and attach it to an ATM main interface, subinterface, or permanent virtual circuit (PVC).

**Restrictions**

For Layer 2 VPN AC configurations, VC-classes can be applied to PVCs only. VC-classes are not supported on Layer 2 port mode interfaces or PVPs.

### SUMMARY STEPS

1. **configure**
2. **vc-class atm name**
3. **encapsulation** {**aal5mux ipv4** | **aal5nlpid** | **aal5snap**}
4. **oam ais-rdi** [*down-count* [*up-count*]]
5. **oam retry** [*up-count* [*down-count* [*retry-frequency*]]]
6. **oam-pvc manage** *seconds*
7. **shape** [**cbr** *peak_output_rate* | **ubr** *peak_output_rate* | **vbr-nrt** *peak_output_rate sustained_output_rate burst_size*| **vbr-rt** *peak_output_rate sustained_output_rate burst_size*]
8. **end** or **commit**

### DETAILED STEPS

| | Command or Action | Purpose |
|---|---|---|
| **Step 1** | **configure**<br>**Example:**<br>`RP/0/RSP0/CPU0:router# configure` | Enters global configuration mode. |
| **Step 2** | **vc-class atm name**<br>**Example:**<br>`RP/0/RSP0/CPU0:router (config)# vc-class atm class1` | Creates a vc-class for an ATM interface and enters vc-class configuration mode. |

| | Command or Action | Purpose |
|---|---|---|
| **Step 3** | **encapsulation** {**aal5mux ipv4** \| **aal5nlpid** \| **aal5snap**}<br>**Example:**<br>`RP/0/RSP0/CPU0:router (config-vc-class-atm)# encapsulation aal5snap` | Configures the ATM adaptation layer (AAL) and encapsulation type for an ATM vc-class.<br>**Note** • The default encapsulation type for a vc-class is AAL5/SNAP<br>• In Vc-classes, the **encapsulation** command applies to Layer 3 Point-to-point configurations only. |
| **Step 4** | **oam ais-rdi** [*down-count* [*up-count*]]<br>**Example:**<br>`RP/0/RSP0/CPU0:router (config-vc-class-atm)# oam ais-rdi 25 5` | Configures the vc-class so that it is brought down after a specified number of OAM alarm indication signal/remote defect indication (AIS/RDI) cells are received on the associated PVC.<br>**Note** • In vc-classes, the **oam ais-rdi** command applies to Layer 3 Point-to-point configurations only. |
| **Step 5** | **oam retry** [*up-count* [*down-count* [*retry-frequency*]]]<br>**Example:**<br>`RP/0/RSP0/CPU0:router (config-vc-class-atm)# oam retry 5 10 5` | Configures parameters related to OAM management.<br>**Note** • In vc-classes, the **oam retry** command applies to Layer 3 Point-to-point configurations only. |
| **Step 6** | **oam-pvc manage** *seconds*<br>**Example:**<br>`RP/0/RSP0/CPU0:router (config-vc-class-atm)# oam-pvc manage 300` | Configures the ATM OAM F5 loopback frequency.<br>**Note** • In vc-classes, the **oam-pvc manage** command applies to Layer 3 Point-to-point configurations only. |
| **Step 7** | **shape** [**cbr** *peak_output_rate* \| **ubr** *peak_output_rate* \| **vbr-nrt** *peak_output_rate sustained_output_rate burst_size*\| **vbr-rt** *peak_output_rate sustained_output_rate burst_size*]<br>**Example:**<br>`RP/0/RSP0/CPU0:router (config-vc-class-atm)# shape vbr-nrt 100000 100000 8000` | Configures ATM traffic shaping for the PVC.<br>You must estimate how much bandwidth is required before you configure ATM traffic shaping.<br>• *peak_output_rate*—Configures the maximum cell rate that is always available for the traffic.<br>• *Sustained_output_rate*—Sustained output rate for the bit rate.<br>• *burst size*—Burst cell size for the bit rate. Range is from 1 through 8192. |
| **Step 8** | **end** or **commit**<br>**Example:**<br>`RP/0/RSP0/CPU0:router (config-if)# end` | Saves configuration changes.<br>• When you issue the **end** command, the system prompts you to commit changes: |

| | Command or Action | Purpose |
|---|---|---|
| | or<br><br>`RP/0/RSP0/CPU0:router(config-if)# commit` | `Uncommitted changes found, commit them before exiting(yes/no/cancel)? [cancel]:`<br>• Entering **yes** saves configuration changes to the running configuration file, exits the configuration session, and returns the router to EXEC mode.<br>• Entering **no** exits the configuration session and returns the router to EXEC mode without committing the configuration changes.<br>• Entering **cancel** leaves the router in the current configuration session without exiting or committing the configuration changes.<br>• Use the **commit** command to save the configuration changes to the running configuration file and remain within the configuration session. |

### What to do next

Attach the vc-class to an ATM main interface, subinterface, or PVC.

To attach a vc-class to an ATM main interface, see the “Attaching a VC-Class to a Point-to-Point ATM Main Interface” section on page -50.

To attach a vc-class to an ATM subinterface, see the “Attaching a VC-Class to a Point-to-Point ATM Subinterface” section on page -52.

To attach a vc-class to an ATM PVC, see the “Attaching a VC-Class to a PVC on an ATM Subinterface” section on page -53.

# Attaching a VC-Class to a Point-to-Point ATM Main Interface

This section describes the tasks and commands required to attach a vc-class to a point-to-point ATM main interface.

**Restrictions**

VC-classes are not applicable to Layer 2 port mode ACs. For Layer 2 VPN configurations, Vc-classes are applicable to the PVC only.

## SUMMARY STEPS

1. **configure**
2. **interface atm** *interface-path-id* **point-to-point**
3. **class-int** *vc-class-name*
4. **end** or **commit**

### DETAILED STEPS

| | Command or Action | Purpose |
|---|---|---|
| **Step 1** | **configure**<br>**Example:**<br>`RP/0/RSP0/CPU0:router# configure` | Enters global configuration mode. |
| **Step 2** | **interface atm** *interface-path-id* **point-to-point**<br>**Example:**<br>`RP/0/RSP0/CPU0:router (config)# interface atm 0/6/0/1 point-to-point` | Enters ATM interface configuration mode. |
| **Step 3** | **class-int** *vc-class-name*<br>**Example:**<br>`RP/0/RSP0/CPU0:router (config-if)# class-int classA` | Attaches the vc-class to an ATM main interface. Replace the *vc-class-name* argument with the name of the vc-class you configured in the Creating and Configuring a VC-Class. |
| **Step 4** | **end** or **commit**<br>**Example:**<br>`RP/0/RSP0/CPU0:router (config-if)# end`<br>or<br>`RP/0/RSP0/CPU0:router(config-if)# commit` | Saves configuration changes.<br>• When you issue the **end** command, the system prompts you to commit changes:<br>`Uncommitted changes found, commit them before exiting(yes/no/cancel)? [cancel]:`<br>• Entering **yes** saves configuration changes to the running configuration file, exits the configuration session, and returns the router to EXEC mode.<br>• Entering **no** exits the configuration session and returns the router to EXEC mode without committing the configuration changes.<br>• Entering **cancel** leaves the router in the current configuration session without exiting or committing the configuration changes.<br>• Use the **commit** command to save the configuration changes to the running configuration file and remain within the configuration session. |

# Attaching a VC-Class to a Point-to-Point ATM Subinterface

This section describes the tasks and commands required to attach a vc-class to an ATM subinterface.

### SUMMARY STEPS

1. **configure**

2. **interface atm** *interface-path-id.subinterface* **point-to-point**
3. **class-int** *vc-class-name*
4. **end** or **commit**

## DETAILED STEPS

| | Command or Action | Purpose |
|---|---|---|
| **Step 1** | **configure**<br>**Example:**<br>`RP/0/RSP0/CPU0:router# configure` | Enters global configuration mode. |
| **Step 2** | **interface atm** *interface-path-id.subinterface* **point-to-point**<br>**Example:**<br>`RP/0/RSP0/CPU0:router (config)# interface atm 0/6/0/1.10 point-to-point` | Enters ATM subinterface configuration mode. |
| **Step 3** | **class-int** *vc-class-name*<br>**Example:**<br>`RP/0/RSP0/CPU0:router (config-subif)# class-int classA` | Assigns the vc-class to an ATM subinterface. Replace the *vc-class-name* argument with the name of the vc-class you configured in the Creating and Configuring a VC-Class. |
| **Step 4** | **end** or **commit**<br>**Example:**<br>`RP/0/RSP0/CPU0:router (config-subif)# end`<br>or<br>`RP/0/RSP0/CPU0:router(config-subif)# commit` | Saves configuration changes.<br>• When you issue the **end** command, the system prompts you to commit changes:<br>`Uncommitted changes found, commit them before exiting(yes/no/cancel)? [cancel]:`<br>• Entering **yes** saves configuration changes to the running configuration file, exits the configuration session, and returns the router to EXEC mode.<br>• Entering **no** exits the configuration session and returns the router to EXEC mode without committing the configuration changes.<br>• Entering **cancel** leaves the router in the current configuration session without exiting or committing the configuration changes.<br>• Use the **commit** command to save the configuration changes to the running configuration file and remain within the configuration session. |

# Attaching a VC-Class to a PVC on an ATM Subinterface

This section describes the tasks and commands required to attach a vc-class to a PVC on an ATM subinterface.

**Note** VC-classes are supported on point-to-point and Layer 2 PVCs.

## SUMMARY STEPS

1. **configure**
2. **interface atm** *interface-path-id.subinterface* [**point-to-point** | **l2transport**]
3. **pvc** *vpi/vci*
4. **class-vc** *vc-class-name*
5. **end** or **commit**

## DETAILED STEPS

| | Command or Action | Purpose |
|---|---|---|
| **Step 1** | **configure**<br>**Example:**<br>`RP/0/RSP0/CPU0:router# configure` | Enters global configuration mode. |
| **Step 2** | **interface atm** *interface-path-id.subinterface* [**point-to-point** \| **l2transport**]<br>**Example:**<br>`RP/0/RSP0/CPU0:router (config)# interface atm 0/6/0/1.10` | Enters subinterface configuration mode and creates the ATM subinterface if it does not already exist.<br>Use the **point-to-point** keyword if you are attaching the vc-class to a point-to-point subinterface. Use the **l2transport** keyword if you are attaching the vc-class to a Layer 2 transport subinterface.<br>**Note** • For more information on creating and configuring ATM subinterfaces, see the Creating a Point-to-Point ATM Subinterface with a PVC. |
| **Step 3** | **pvc** *vpi/vci*<br>**Example:**<br>`RP/0/RSP0/CPU0:router (config-if)# pvc 5/50` | Enters ATM PVC configuration mode and creates the PVC if it does not already exist.<br>**Note** • For more information on creating and configuring PVCs on ATM subinterfaces, see the Creating a Point-to-Point ATM Subinterface with a PVC. |

| | Command or Action | Purpose |
|---|---|---|
| **Step 4** | **class-vc** *vc-class-name*<br>**Example:**<br>`RP/0/RSP0/CPU0:router (config-atm-vc)# class-vc classA` | Assigns a vc-class to an ATM PVC. Replace the *vc-class-name* argument with the name of the vc-class you want to attach to the PVC. |
| **Step 5** | **end** or **commit**<br>**Example:**<br>`RP/0/RSP0/CPU0:router (config-if)# end`<br>or<br>`RP/0/RSP0/CPU0:router(config-if)# commit` | Saves configuration changes.<br>• When you issue the **end** command, the system prompts you to commit changes:<br>`Uncommitted changes found, commit them before exiting(yes/no/cancel)? [cancel]:`<br>• Entering **yes** saves configuration changes to the running configuration file, exits the configuration session, and returns the router to EXEC mode.<br>• Entering **no** exits the configuration session and returns the router to EXEC mode without committing the configuration changes.<br>• Entering **cancel** leaves the router in the current configuration session without exiting or committing the configuration changes.<br>• Use the **commit** command to save the configuration changes to the running configuration file and remain within the configuration session. |

# How to Configure ILMI on ATM Interfaces

The configuration tasks for managing ILMI on ATM interfaces are described in the following procedures:

# Enabling ILMI on an ATM Interface

This task describes the commands you can use to configure an ATM interface for ILMI.

**Note** For ILMI, a PVC is configured directly on the ATM main interface. Subinterface configuration is not necessary for ATM interfaces that are used for ILMI.

### Before you begin

Bring up the ATM interface and remove the shutdown configuration, as described in the Bringing Up an ATM Interface.

**Restrictions**

- The configuration on both ends of the ATM ILMI connection must match for the interface to be active.
- ILMI configuration is not supported on Layer 2 port mode ACs.

## SUMMARY STEPS

1. **configure**
2. **interface atm** *interface-path-id*
3. **atm address-registration**
4. **atm ilmi-keepalive** [**act-poll-freq** *frequency*] [**retries** *count*] [**inact-poll-freq** *frequency*]
5. **pvc** *vpi*/*vci* **ilmi**
6. **end**
7. **commit** RP/0/RSP0/CPU0:router (config-if)# end
8. **exit**
9. **exit**
10. **show atm ilmi-status** [**atm** *interface-path-id*]

## DETAILED STEPS

| | Command or Action | Purpose |
|---|---|---|
| **Step 1** | **configure**<br>**Example:**<br>`RP/0/RSP0/CPU0:router# configure` | Enters global configuration mode. |
| **Step 2** | **interface atm** *interface-path-id*<br>**Example:**<br>`RP/0/RSP0/CPU0:router (config)# interface atm 0/6/0/1` | Enters ATM interface configuration mode. |
| **Step 3** | **atm address-registration**<br>**Example:**<br>`RP/0/RSP0/CPU0:router (config-if)# atm address-registration` | (Optional) Enables the router to engage in address registration and callback functions with the Interim Local Management Interface (ILMI). |
| **Step 4** | **atm ilmi-keepalive** [**act-poll-freq** *frequency*] [**retries** *count*] [**inact-poll-freq** *frequency*]<br>**Example:**<br>`RP/0/RSP0/CPU0:router (config-if)# atm ilmi-keepalive` | (Optional) Enables ILMI keepalives on an ATM interface. |
| **Step 5** | **pvc** *vpi*/*vci* **ilmi**<br>**Example:**<br>`RP/0/RSP0/CPU0:router (config-if)# pvc 5/30 ilmi` | Creates an ATM permanent virtual circuit (PVC) with ILMI encapsulation. |

| | Command or Action | Purpose |
|---|---|---|
| **Step 6** | **end** | or |
| **Step 7** | **commit** RP/0/RSP0/CPU0:router (config-if)# end<br>**Example:**<br>`RP/0/RSP0/CPU0:router(config-if)# commit` | or<br>Saves configuration changes.<br>• When you issue the **end** command, the system prompts you to commit changes:<br>`Uncommitted changes found, commit them before exiting(yes/no/cancel)? [cancel]:`<br>• Entering **yes** saves configuration changes to the running configuration file, exits the configuration session, and returns the router to EXEC mode.<br>• Entering **no** exits the configuration session and returns the router to EXEC mode without committing the configuration changes.<br>• Entering **cancel** leaves the router in the current configuration session without exiting or committing the configuration changes.<br>• Use the **commit** command to save the configuration changes to the running configuration file and remain within the configuration session. |
| **Step 8** | **exit**<br>**Example:**<br>`RP/0/RSP0/CPU0:router (config-if)# exit` | Exits interface configuration mode and enters global configuration mode. |
| **Step 9** | **exit**<br>**Example:**<br>`RP/0/RSP0/CPU0:router (config)# exit` | Exits global configuration mode and enters EXEC mode. |
| **Step 10** | **show atm ilmi-status** [**atm** *interface-path-id*]<br>**Example:**<br>`RP/0/RSP0/CPU0:router (config)# show atm ilmi-status atm 0/6/0/1` | (Optional) Verifies the ILMI configuration for the specified interface. |

# Disabling ILMI on an ATM Interface

This task describes the commands you can use to disable ILMI on an ATM interface.

## SUMMARY STEPS

1. **configure**
2. **interface atm** *interface-path-id*
3. **atm ilmi-config disable**
4. **end** or **commit**
5. **exit**
6. **exit**
7. **show atm ilmi-status** [**atm** *interface-path-id*]

## DETAILED STEPS

| | Command or Action | Purpose |
|---|---|---|
| **Step 1** | **configure**<br>**Example:**<br>`RP/0/RSP0/CPU0:router# configure` | Enters global configuration mode. |
| **Step 2** | **interface atm** *interface-path-id*<br>**Example:**<br>`RP/0/RSP0/CPU0:router (config)# interface atm 0/6/0/1` | Enters ATM interface configuration mode. |
| **Step 3** | **atm ilmi-config disable**<br>**Example:**<br>`RP/0/RSP0/CPU0:router (config-if)# atm ilmi-config disable` | (Optional) Disables ILMI on the ATM interface.<br>To re-enable ILMI on an ATM interface, use the **no atm ilmi-config disable** form of this command. |
| **Step 4** | **end** or **commit**<br>**Example:**<br>`RP/0/RSP0/CPU0:router (config-if)# end`<br>or<br>`RP/0/RSP0/CPU0:router(config-if)# commit` | Saves configuration changes.<br>• When you issue the **end** command, the system prompts you to commit changes:<br>`Uncommitted changes found, commit them before exiting(yes/no/cancel)? [cancel]:`<br>• Entering **yes** saves configuration changes to the running configuration file, exits the configuration session, and returns the router to EXEC mode.<br>• Entering **no** exits the configuration session and returns the router to EXEC mode without committing the configuration changes.<br>• Entering **cancel** leaves the router in the current configuration session without exiting or committing the configuration changes. |

| | Command or Action | Purpose |
|---|---|---|
| | | • Use the **commit** command to save the configuration changes to the running configuration file and remain within the configuration session. |
| **Step 5** | **exit**<br>**Example:**<br>`RP/0/RSP0/CPU0:router (config-if)# exit` | Exits interface configuration mode and enters global configuration mode. |
| **Step 6** | **exit**<br>**Example:**<br>`RP/0/RSP0/CPU0:router (config)# exit` | Exits global configuration mode and enters EXEC mode. |
| **Step 7** | **show atm ilmi-status** [**atm** *interface-path-id*]<br>**Example:**<br>`RP/0/RSP0/CPU0:router (config)# show atm ilmi-status atm 0/6/0/1` | (Optional) Verifies the ILMI configuration for the specified interface. |

# How to Configure Channelized ATM

This task describes how to configure a T3 path into multiple T1 channels carrying ATM traffic.

### SUMMARY STEPS

1. **configure**
2. **hw-module subslot** *subslot-id* **cardtype** {**t3** | **e3**}
3. **controller t3** *interface-path-id*
4. **mode** *mode*
5. **controller t1** *interface-path-id*
6. **mode** *mode*
7. **interface atm** *interface-path-id*
8. **interface atm** *interface-path-id.subinterface* **point-to-point**
9. **pvc** *vpi/vci*
10. **ipv4 address** *ipv4_address/prefix*
11. **end** or **commit**
12. **hw-module subslot** *subslot-id* **cardtype** {**t3** | **e3**}
13. **controller t3** *interface-path-id*
14. **mode** *mode*
15. **interface atm** *interface-path-id*
16. **vp-tunnel** *vpi*
17. **interface atm** *interface-path-id.subinterface* **point-to-point**
18. **pvc** *vpi/vci*
19. **ipv4 address** *ipv4_address/prefix*

20. **interface atm** *interface-path-id.subinterface* **point-to-point**
21. **pvc** *vpi/vci*
22. **ipv4 address** *ipv4_address/prefix*
23. **end** or **commit**

## DETAILED STEPS

| | Command or Action | Purpose |
|---|---|---|
| **Step 1** | **configure**<br>**Example:**<br>`RP/0/RSP0/CPU0:router# configure` | Enters global configuration mode. |
| **Step 2** | **hw-module subslot** *subslot-id* **cardtype** {**t3** \| **e3**}<br>**Example:**<br>`RP/0/RSP0/CPU0:router(config)# hw-module subslot 0/1/0 cardtype t3` | Sets the card type for the SPA.<br>• t3—Specifies T3 connectivity of 44,210 kbps through the network, using B3ZS coding. This is the default setting.<br>• e3—Specifies a wide-area digital transmission scheme used predominantly in Europe that carries data at a rate of 34,010 kbps. |
| **Step 3** | **controller t3** *interface-path-id*<br>**Example:**<br>`RP/0/RSP0/CPU0:router(config)# controller t3 0/1/0/0` | Creates a T3 controller and enters the T3 controller configuration mode. Specifies the T3 controller interface-path-id identifier with the *rack/slot/module/port* notation. |
| **Step 4** | **mode** *mode*<br>**Example:**<br>`RP/0/RSP0/CPU0:router(config-t3)# mode t1` | Sets the mode of interface. The possible modes are:<br>• atm—clear channel carrying atm<br>• e1—channelize into 21 E1s<br>• serial—clear channel carrying hdlc like payload<br>• t1—channelized into 28 T1s |
| **Step 5** | **controller t1** *interface-path-id*<br>**Example:**<br>`RP/0/RSP0/CPU0:router(config-t3)# controller t1 0/1/0/0` | Creates a T1 controller and enters the T1 controller configuration submode. Specifies the T1 controller *interface-path-id* with the *rack/slot/module/port* notation. |
| **Step 6** | **mode** *mode*<br>**Example:**<br>`RP/0/RSP0/CPU0:router(config-t1)# mode atm` | Sets the mode of interface. The possible modes are:<br>• atm—clear channel carrying atm<br>• e1—channelize into 21 E1s<br>• serial—clear channel carrying hdlc like payload |

| | Command or Action | Purpose |
|---|---|---|
| | | • t1—channelized into 28 T1s |
| **Step 7** | **interface atm** *interface-path-id*<br>**Example:**<br>`RP/0/RSP0/CPU0:router(config-t1)# interface atm 0/1/0/0` | Creates an ATM interface and enters ATM interface configuration mode. Specifies the ATM interface with the *rack/slot/module/port* notation. |
| **Step 8** | **interface atm** *interface-path-id.subinterface* **point-to-point**<br>**Example:**<br>`RP/0/RSP0/CPU0:router(config-if)# interface atm 0/1/0/1.1 point-to-point` | Creates an ATM subinterface as one endpoint of a point-to-point link and enters ATM subinterface configuration mode. Specifies the ATM interface with the *rack/slot/module/port.subinterface* notation. |
| **Step 9** | **pvc** *vpi/vci*<br>**Example:**<br>`RP/0/RSP0/CPU0:router(config-subif)# pvc 10/100` | Creates an ATM permanent virtual circuit (PVC) and enters ATM PVC configuration submode.<br>**Note** • Only one PVC is allowed per subinterface. |
| **Step 10** | **ipv4 address** *ipv4_address/prefix*<br>**Example:**<br>`RP/0/RSP0/CPU0:router(config-atm-vc)#ipv4 address 10.212.4.22 255.255.255.0` | Assigns an IP address and subnet mask to the subinterface. |
| **Step 11** | **end** or **commit**<br>**Example:**<br>`RP/0/RSP0/CPU0:router(config-sonet)# end`<br>or<br>`RP/0/RSP0/CPU0:router(config-sonet)# commit`<br>**Example:**<br>`RP/0/RSP0/CPU0:router# configure` | Saves configuration changes.<br>• When you issue the **end** command, the system prompts you to commit changes:<br>`Uncommitted changes found, commit them before exiting(yes/no/cancel)? [cancel]:`<br>• Entering **yes** saves configuration changes to the running configuration file, exits the configuration session, and returns the router to EXEC mode.<br>• Entering **no** exits the configuration session and returns the router to EXEC mode without committing the configuration changes.<br>• Entering **cancel** leaves the router in the current configuration session without exiting or committing the configuration changes.<br>• Use the **commit** command to save the configuration changes to the running configuration file and remain within the configuration session. |

| | Command or Action | Purpose |
|---|---|---|
| | | How to Configure Clear Channel ATM with Virtual Path (VP) Tunnels<br><br>This task describes how to configure a T3 ATM path with multiple VP tunnels.<br><br>configure<br><br>Enters global configuration mode. |
| **Step 12** | **hw-module subslot** *subslot-id* **cardtype** {**t3** \| **e3**}<br><br>**Example:**<br><br>`RP/0/RSP0/CPU0:router(config)# hw-module subslot 0/1/0 cardtype t3` | Sets the card type for the SPA.<br><br>• t3—Specifies T3 connectivity of 44,210 kbps through the network, using B3ZS coding. This is the default setting.<br><br>• e3—Specifies a wide-area digital transmission scheme used predominantly in Europe that carries data at a rate of 34,010 kbps. |
| **Step 13** | **controller t3** *interface-path-id*<br><br>**Example:**<br><br>`RP/0/RSP0/CPU0:router(config)# controller t3 0/1/0/0` | Creates a T3 controller and enters the T3 controller configuration mode. Specifies the T3 controller *interface-path-id* with the *rack/slot/module/port* notation. |
| **Step 14** | **mode** *mode*<br><br>**Example:**<br><br>`RP/0/RSP0/CPU0:router(config-t3)# mode t1` | Sets the mode of interface. The possible modes are:<br><br>• atm—clear channel carrying atm<br><br>• e1—channelize into 21 E1s<br><br>• serial—clear channel carrying hdlc like payload<br><br>• t1—channelized into 28 T1s |
| **Step 15** | **interface atm** *interface-path-id*<br><br>**Example:**<br><br>`RP/0/RSP0/CPU0:router(config-t1)# interface atm 0/1/0/0` | Creates an ATM interface and enters ATM interface configuration mode. Specifies the ATM interface with the *rack/slot/module/port* notation. |
| **Step 16** | **vp-tunnel** *vpi*<br><br>**Example:**<br><br>`RP/0/RSP0/CPU0:router (config)# vp-tunnel 10` | Configures a vp-tunnel on an ATM interface. |
| **Step 17** | **interface atm** *interface-path-id.subinterface* **point-to-point**<br><br>**Example:** | Creates an ATM subinterface as one endpoint of a point-to-point link and enters ATM subinterface configuration mode. Specifies the ATM interface with the *rack/slot/module/port.subinterface* notation. |

| | Command or Action | Purpose |
|---|---|---|
| | `RP/0/RSP0/CPU0:router(config-if)# interface atm 0/1/0/1.1 point-to-point` | |
| **Step 18** | **pvc** *vpi*/*vci*<br>**Example:**<br>`RP/0/RSP0/CPU0:router(config-subif)# pvc 10/100` | Creates an ATM permanent virtual circuit (PVC) and enters ATM PVC configuration submode.<br>**Note** • Only one PVC is allowed per subinterface. |
| **Step 19** | **ipv4 address** *ipv4_address/prefix*<br>**Example:**<br>`RP/0/RSP0/CPU0:router(config-atm-vc)#ipv4 address 10.212.8.22 255.255.255.0` | Assigns an IP address and subnet mask to the subinterface. |
| **Step 20** | **interface atm** *interface-path-id.subinterface* **point-to-point**<br>**Example:**<br>`RP/0/RSP0/CPU0:router(config-if)# interface atm 0/1/0/1.2 point-to-point` | Creates an ATM subinterface as one endpoint of a point-to-point link and enters ATM subinterface configuration mode. Specifies the ATM interface with the *rack/slot/module/port.subinterface* notation. |
| **Step 21** | **pvc** *vpi*/*vci*<br>**Example:**<br>`RP/0/RSP0/CPU0:router(config-subif)# pvc 10/200` | Creates an ATM permanent virtual circuit (PVC) and enters ATM PVC configuration submode.<br>**Note** • Only one PVC is allowed per subinterface. |
| **Step 22** | **ipv4 address** *ipv4_address/prefix*<br>**Example:**<br>`RP/0/RSP0/CPU0:router(config-atm-vc)#ipv4 address 10.212.12.22 255.255.255.0` | Assigns an IP address and subnet mask to the subinterface. |
| **Step 23** | **end** or **commit**<br>**Example:**<br>`RP/0/RSP0/CPU0:router(config-sonet)# end`<br>or<br>`RP/0/RSP0/CPU0:router(config-sonet)# commit` | Saves configuration changes.<br>• When you issue the **end** command, the system prompts you to commit changes:<br>`Uncommitted changes found, commit them before exiting(yes/no/cancel)? [cancel]:`<br>• Entering **yes** saves configuration changes to the running configuration file, exits the configuration session, and returns the router to EXEC mode.<br>• Entering **no** exits the configuration session and returns the router to EXEC mode without committing the configuration changes. |

| | Command or Action | Purpose |
|---|---|---|
| | | • Entering **cancel** leaves the router in the current configuration session without exiting or committing the configuration changes.<br>• Use the **commit** command to save the configuration changes to the running configuration file and remain within the configuration session. |

# Attaching a Service-Policy to an Attachment Circuit

The QoS **service-policy** command can be configured for an attachment circuit in the following modes:

- PVC mode
- PVP mode
- Port mode
- Main Interface (non-port mode)

In PVC mode, PVP mode, and Port mode, the service policy is attached in the l2transport sub-interface mode. In non-port mode, the service policy is attached to the main interface.

Use the following procedures to attach a service-policy to an attachment circuit.

PVC Mode

## SUMMARY STEPS

1. **config**
2. **interface atm** *interface-path-id.subinterface* **l2transport**
3. **interface atm** *interface-path-id*
4. **service-policy input | output** *policy_name*
5. **commit**
6. **config**
7. **interface atm** *interface-path-id.subinterface* **l2transport**
8. **pvp** *vpi*
9. **service-policy input | output** *policy_name*
10. **commit**
11. **config**
12. **interface atm** *interface-path-id*
13. **l2transport**
14. **service-policy input | output** *policy_name*
15. **commit**
16. **config**
17. **interface atm** *interface-path-id*
18. **service-policy input | output** *policy_name*
19. **commit**

## DETAILED STEPS

| | Command or Action | Purpose |
|---|---|---|
| **Step 1** | **config**<br>**Example:**<br>`RP/0/RSP0/CPU0:router# config terminal` | Enters global configuration mode. |
| **Step 2** | **interface atm** *interface-path-id.subinterface* **l2transport**<br>**Example:**<br>`RP/0/RSP0/CPU0:router(config)# interface atm 0/1/0/0.2 l2transport` | Creates a subinterface and enters ATM subinterface configuration mode for that subinterface. |
| **Step 3** | **interface atm** *interface-path-id*<br>**Example:**<br>`RP/0/RSP0/CPU0:router (config)# interface atm 0/1/0/1` | Enters interface configuration mode for an ATM interface. |
| **Step 4** | **service-policy input \| output** *policy_name*<br>**Example:**<br>`RP/0/RSP0/CPU0(config-atm-l2transport-pvc)#service-policy input \| output atm_policy_1` | Attaches the specified service policy to the ATM PVC subinterface. |
| **Step 5** | **commit**<br>**Example:**<br>`RP/0/RSP0/CPU0:router(config-if)# commit` | Saves configuration changes.<br>PVP Mode |
| **Step 6** | **config**<br>**Example:**<br>`RP/0/RSP0/CPU0:router# config terminal` | Enters global configuration mode. |
| **Step 7** | **interface atm** *interface-path-id.subinterface* **l2transport**<br>**Example:**<br>`RP/0/RSP0/CPU0:router(config)# interface atm 0/1/0/0.2 l2transport` | Creates a subinterface and enters ATM subinterface configuration mode for that subinterface. |
| **Step 8** | **pvp** *vpi*<br>**Example:**<br>`RP/0/RSP0/CPU0:router(config-subif)# pvp 30` | (Optional) Creates an ATM PVP and enters ATM PVP configuration submode.<br>**Note** • Only one PVP is allowed per subinterface. |
| **Step 9** | **service-policy input \| output** *policy_name*<br>**Example:** | Attaches the specified service policy to the ATM PVP subinterface. |

| | Command or Action | Purpose |
|---|---|---|
| | `RP/0/RSP0/CPU0(config-atm-l2transport-pvp)#service-policy input \| output atm_policy_2` | |
| **Step 10** | **commit**<br>**Example:**<br>`RP/0/RSP0/CPU0:router(config-if)# commit` | Saves configuration changes.<br>Port Mode |
| **Step 11** | **config**<br>**Example:**<br>`RP/0/RSP0/CPU0:router# config terminal` | Enters global configuration mode. |
| **Step 12** | **interface atm** *interface-path-id*<br>**Example:**<br>`RP/0/RSP0/CPU0:router (config)# interface atm 0/1/0/1` | Enters interface configuration mode for an ATM interface. |
| **Step 13** | **l2transport**<br>**Example:**<br>`RP/0/RSP0/CPU0:router (config-if)# l2transport` | Enters ATM Layer 2 transport configuration mode, and enables Layer 2 port mode on this ATM interface. |
| **Step 14** | **service-policy input \| output** *policy_name*<br>**Example:**<br>`RP/0/RSP0/CPU0(config-if-l2)#service-policy input \| output atm_policy_3` | Attaches the specified service policy to the ATM Layer 2 subinterface. |
| **Step 15** | **commit**<br>**Example:**<br>`RP/0/RSP0/CPU0:router(config-if)# commit` | Saves configuration changes.<br>Main Interface (non-port mode) |
| **Step 16** | **config**<br>**Example:**<br>`RP/0/RSP0/CPU0:router# config terminal` | Enters global configuration mode. |
| **Step 17** | **interface atm** *interface-path-id*<br>**Example:**<br>`RP/0/RSP0/CPU0:router (config)# interface atm 0/1/0/1` | Enters interface configuration mode for an ATM interface. |
| **Step 18** | **service-policy input \| output** *policy_name*<br>**Example:** | Attaches the specified service policy to the main ATM interface. |

| | Command or Action | Purpose |
|---|---|---|
| | `RP/0/RSP0/CPU0(config-if)#service-policy input \| output atm_policy_4` | |
| **Step 19** | **commit**<br>**Example:**<br>`RP/0/RSP0/CPU0:router(config-if)# commit` | Saves configuration changes. |

# ATM Configuration: Examples

This section provides the following configuration examples:

## ATM Interface Bring Up and Configuration: Example

The following example shows how to bring up and configure an ATM interface:

```
RP/0/RSP0/CPU0:router #configure
RP/0/RSP0/CPU0:router(config)# interface atm 0/6/0/0
RP/0/RSP0/CPU0:router(config-if)# atm address-registration
RP/0/RSP0/CPU0:router(config-if)# no shutdown

RP/0/RSP0/CPU0:router(config-if)# commit
```

## Point-To-Point ATM Subinterface Configuration: Example

The following example shows how to configure a point-to-point ATM subinterface on an ATM main interface:

```
RP/0/RSP0/CPU0:router # configure
RP/0/RSP0/CPU0:router (config)# interface atm 0/2/0/2.1 point-to-point
RP/0/RSP0/CPU0:router (config-if)# ipv4 address 10.46.8.6/24
RP/0/RSP0/CPU0:router (config-if)# pvc 0/200
RP/0/RSP0/CPU0:router (config-atm-vc)# commit
RP/0/RSP0/CPU0:router (config-atm-vc)# exit
RP/0/RSP0/CPU0:router (config-if)# exit
RP/0/RSP0/CPU0:router (config)# exit

RP/0/RSP0/CPU0:router # show interfaces atm 0/2/0/2.1

ATM0/2/0/2.1 is up, line protocol is up
  Hardware is ATM network sub-interface(s)
  Description: Connect to P4_C12810 ATM 1/2.1
  Internet address is 10.46.8.6/24
  MTU 4470 bytes, BW 155000 Kbit
     reliability Unknown, txload Unknown, rxload Unknown
  Encapsulation AAL5/SNAP, controller loopback not set,
  Last clearing of "show interface" counters Unknown
  Datarate information unavailable.
  Interface counters unavailable.

RP/0/RSP0/CPU0:router # show atm interface atm 0/2/0/3
```

```
Interface                             : ATM0/2/0/3
AAL Enabled                           : AAL5
Max-VP                                : 254
Max-VC                                : 2046
Configured L2 PVPs                    : 0
Configured L2 PVCs                    : 0
Configured L3 VP-Tunnels              : 0
Configured L3 PVCs                    : 1
L2 PVPs in Down State                 : 0
L2 PVCs in Down State                 : 0
L3 VP-Tunnels in Down State           : 0
L3 PVCs in Down State                 : 0
Cell packing count                    : 0

Received Side Statistics:
    Received Cells                    : 0
    Received Bytes                    : 0
    Received AAL Packets              : 0

Receive Side Cells Dropped:
    Unrecognized VPI/VCI              : 0

Receive Side AAL5 Packets Dropped:
    Unavailable SAR Buffer            : 0
    Non-Resource Exhaustion           : 0
    Reassembly Timeout                : 0
    Zero Length                       : 0
    Unavailable Host Buffer           : 0
    Packet size exceeds MPS           : 0
    AAL5 Trailer Length Errors        : 0

Transmit Side Statistics:
    Transmitted Cells                 : 1899716067
    Transmitted Bytes                 : 0
    Transmitted AAL Packets           : 0

Transmit Side Cells Dropped:
    Unrecognized VPI/VCI              : 0

Transmit Side AAL5 Packets Dropped:
    Unavailable SAR Buffer            : 0
    Non-Resource Exhaustion           : 0
    WRED Threshold                    : 0
    WRED Random                       : 0

RP/0/RSP0/CPU0:router # show atm pvc 10/100

Detailed display of VC(s) with VPI/VCI = 10/100

ATM0/2/0/3.100: VPI: 10 VCI: 100
UBR, PeakRate: 622000 Kbps
AAL5-LLC/SNAP
OAM frequency: 10 second(s), OAM retry frequency: 1 second(s),
OAM up retry count: 3, OAM down retry count: 5,
OAM Keep-vc-up: False, OAM AIS-RDI failure: None,
OAM AIS-RDI down count: 1, OAM AIS-RDI up time: 3 second(s),
OAM Loopback status: No loopback enabled,
OAM VC state: Loopback Not verified,
VC is not managed by OAM,

OAM cells received: 0,
F5 InEndLoop: 0, F5 InSegLoop: 0,
F5 InEndAIS: 0,  F5 InSegAIS: 0,
```

```
F5 InEndRDI: 0,  F5 InSegRDI: 0,
OAM cells sent: 0,
F5 OutEndLoop: 0, F5 OutSegLoop: 0,
F5 OutEndAIS: 0,  F5 OutSegAIS: 0,
F5 OutEndRDI: 0,  F5 OutSegRDI: 0,
OAM cells drops: 0

InPkts: 0                    OutPkts: 0
InBytes: 0                   OutBytes: 0
WRED pkt drop: 0
Non WRED pkt drop: 0

Internal state: READY
Status: UP
```

# Layer 2 AC Creation and Configuration: Example

This example shows how to create and configure one endpoint of a Layer 2 port mode AC:

```
RP/0/RSP0/CPU0:router# configure

RP/0/RSP0/CPU0:router (config)# interface atm 0/6/0/1

RP/0/RSP0/CPU0:router (config-if)# l2transport
RP/0/RSP0/CPU0:router (config-if-l2)# cell-packing 6 1

RP/0/RSP0/CPU0:router(config-if-l2)# commit
```

The following example shows how to create and configure an AC on a Layer 2 subinterface with a PVC:

```
RP/0/RSP0/CPU0:router# configure

RP/0/RSP0/CPU0:router(config)# interface atm 0/1/0/0.230 l2transport

RP/0/RSP0/CPU0:router(config-if)# pvc 15/230

RP/0/RSP0/CPU0:router(config-atm-l2transport-pvc)# encapsulation aal0

RP/0/RSP0/CPU0:router(config-atm-l2transport-pvc)# cell-packing 5 2

RP/0/RSP0/CPU0:router(config-atm-l2transport-pvc)# shape cbr 622000

RP/0/RSP0/CPU0:router(config-atm-l2transport-pvc)# commit

RP/0/RSP0/CPU0:router(config-atm-l2transport-pvc)#

RP/0/RSP0/CPU0:router(config-if)# exit

RP/0/RSP0/CPU0:router(config)# exit
```

```
RP/0/RSP0/CPU0:router# show atm pvc

                                              Peak  Avg/Min  Burst
Interface          VPI  VCI Type  Encaps  SC   Kbps   Kbps    Cells  Sts
ATM0/1/0/0.230      15  230 PVC   AAL0   UBR  622000    N/A     N/A   UP
ATM0/1/0/3.19       17   19 PVC   SNAP   UBR  622000    N/A     N/A   UP
```

The following example shows how to create and configure an AC on an ATM subinterface with a PVP:

```
RP/0/RSP0/CPU0:router# configure

RP/0/RSP0/CPU0:router(config)# interface atm 0/6/0/1.10 l2transport

RP/0/RSP0/CPU0:router(config-if)# pvp 100

RP/0/RSP0/CPU0:router(config-atm-l2transport-pvp)# cell-packing 5 2

RP/0/RSP0/CPU0:router(config-atm-l2transport-pvp)# shape ubr 155000

RP/0/RSP0/CPU0:router(config-atm-l2transport-pvp)# commit

RP/0/RSP0/CPU0:router# show atm pvp interface atm 0/6/0/1

                                 Peak  Avg/Min   Burst
Interface          VPI  SC        Kbps     Kbps   Cells      Sts
ATM0/6/0/1.10      100  UBR      155000    N/A      N/A        UP
```

# VC-Class Creation and Configuration: Example

The following example shows how to configure a vc-class:

```
RP/0/RSP0/CPU0:router # configure
RP/0/RSP0/CPU0:router(config)# vc-class atm atm-class-1
RP/0/RSP0/CPU0:router(config-vc-class-atm)# encapsulation aal5snap
RP/0/RSP0/CPU0:router(config-vc-class-atm)# oam ais-rdi 25 5
RP/0/RSP0/CPU0:router(config-vc-class-atm)# oam retry 5 10 5
RP/0/RSP0/CPU0:router(config-vc-class-atm)# oam-pvc manage 300
RP/0/RSP0/CPU0:router(config-vc-class-atm)# shape cbr 100000

RP/0/RSP0/CPU0:router(config-vc-class-atm)# commit
```

The following example shows how to attach a vc-class to an ATM main interface:

```
RP/0/RSP0/CPU0:router # configure
RP/0/RSP0/CPU0:router(config)# interface ATM0/2/0/0.1 point-to-point
RP/0/RSP0/CPU0:router (config-if)# class-int atm-class-1
RP/0/RSP0/CPU0:router (config-if)# commit
```

The following example shows how to attach a vc-class to an ATM subinterface:

```
RP/0/RSP0/CPU0:router # configure
```

```
RP/0/RSP0/CPU0:router(config)# interface ATM0/2/0/0.1 point-to-point
RP/0/RSP0/CPU0:router(config-if)# pvc 10/100
RP/0/RSP0/CPU0:router (config-atm-vc)# class-vc atm-class-1
RP/0/RSP0/CPU0:router (config-atm-vc)# commit
```

The following example shows how to display information about a specific ATM vc-class:

```
RP/0/RSP0/CPU0:router # show atm vc-class atm-class-1
ATM vc-class atm-class-1

  encapsulation          -    aal5snap
  shape                  -    cbr 100000
  oam ais-rdi            -    not configured
  oam retry              -    not configured
  oam-pvc                -    manage 300
```

The following example shows how to display configuration information for the parameters on a virtual circuit (VC) class that is associated with a particular PVC:

```
RP/0/RSP0/CPU0:router # show atm class-link 10/100

Detailed display of VC(s) with VPI/VCI = 10/100

Class link for VC 10/100
ATM0/2/0/0.1: VPI: 10 VCI: 100
shape : cbr 100000 (VC-class configured on VC)
encapsulation : aal5snap (VC-class configured on VC)
oam-pvc : manage 300   (VC-class configured on VC)
oam retry : 3 5 1 (Default value)
oam ais-rdi : 1 3 (Default value)
```

# Channelized ATM Configuration: Example

The following example shows how to configure a T3 path into mutliple T1 channels carrying ATM traffic.

```
RP/0/RSP0/CPU0:router# config
RP/0/RSP0/CPU0:router(config)# hw-module subslot 0/4/0 cardtype t3
RP/0/RSP0/CPU0:router(config)# controller T3 0/4/0/0
RP/0/RSP0/CPU0:router(config-t3)# mode t1
RP/0/RSP0/CPU0:router(config-t3)# controller T1 0/4/0/0/1
RP/0/RSP0/CPU0:router(config-t1)# mode atm
RP/0/RSP0/CPU0:router(config-t1)# interface ATM 0/4/0/0/1
RP/0/RSP0/CPU0:router(config-if)# interface ATM 0/4/0/0/1.1 point-to-point
RP/0/RSP0/CPU0:router(config-subif)# pvc 10/100
RP/0/RSP0/CPU0:router(config-atm-vc)# ipv4 address 10.212.4.22 255.255.255.0
RP/0/RSP0/CPU0:router(config-subif)# commit
```

# Clear Channel ATM with Virtual Path (VP) Tunnels Configuration: Example

The following example shows how to configure a T3 ATM path with multiple VP tunnels.

```
RP/0/RSP0/CPU0:router# config
RP/0/RSP0/CPU0:router(config)# hw-module subslot 0/4/0 cardtype t3
RP/0/RSP0/CPU0:router(config)# controller T3 0/4/0/1
RP/0/RSP0/CPU0:router(config-t3)# mode atm
RP/0/RSP0/CPU0:router(config-t3)# interface ATM 0/4/0/1
```

```
RP/0/RSP0/CPU0:router(config-if)# vp-tunnel 10
RP/0/RSP0/CPU0:router(config-atm-vp-tunnel)# interface ATM 0/4/0/1.1 point-to$
RP/0/RSP0/CPU0:router(config-subif)# pvc 10/100
RP/0/RSP0/CPU0:router(config-atm-vc)# ipv4 address 10.212.8.22 255.255.255.0
RP/0/RSP0/CPU0:router(config-subif)# interface ATM 0/4/0/1.2 point-to-point
RP/0/RSP0/CPU0:router(config-subif)# pvc 10/200
RP/0/RSP0/CPU0:router(config-atm-vc)# ipv4 address 10.212.12.22 255.255.255.0
RP/0/RSP0/CPU0:router(config-subif)# commit
```

# ATM Layer 2 QoS Configuration: Examples

The following examples show how to configure QoS for ATM. For complete information on configuring QoS and QoS commands, refer to the Cisco XR 12000 Series Router Modular Quality of Service Configuration Guide and the Cisco XR 12000 Series Router Modular Quality of Service Command Reference.

## Attaching a Service-Policy to an Attachment Circuit Configuration: Example

### PVC Mode

```
config
interface ATM 0/1/0/0.2 l2transport
pvc 10/2
service-policy input | output atm_policy_o
```

### PVP Mode

```
config
interface ATM 0/1/0/0.3 l2transport
pvp 30
service-policy input atm_policy_i
```

### Port Mode

```
config
   interface ATM 0/1/0/0
      l2transport
         service-policy input atm_policy_i
```

### Main Interface (non-port mode)

```
config
  interface ATM 0/1/0/0
      service-policy input | output atm_policy_o
```

## Policy Map Configuration for CBR/UBR: Example

For CBR.1 (real-time traffic) and UBR (best effort, non-real time traffic) you must specify the PCR and delay tolerance parameters for policing. The main difference between the configurations for UBR.1 and UBR.2 traffic is that for UBR.2 traffic, the exceed action includes the **set-clp-transmit** option to tag non-conforming cells. The police rate can also be expressed as a percentage.

The following example shows how to configure a QoS policy map for CBR/UBR:

```
policy-map CBR1
    class class-default
         police rate pcr cellsps delay-tolerance cdvt us
               conform-action action
              exceed-action action
```

## Policy Map Configuration for VBR.1: Example

For VBR.1 real-time and non-real time traffic you must specify the PCR, SCR, and delay tolerance parameters for for policing. The **atm-mbs** parameter can be specified to define the burst allowed on the SCR bucket. The police rates can also be expressed as percentages. Class atm_clp1 is allowed with police actions.

The following example shows how to configure a QoS policy map for VBR.1:

```
policy-map VBR1
    class class-default
          police rate scr cellsps atm-mbs mbs cells peak-rate pcr cellsps delay-tolerance
cdvt us
               conform-action action
               exceed-action action
```

## Policy Map Configuration for VBR.2 and VBR.3: Example

For VBR.2 and VBR.3 real-time and non-real time traffic you must specify the PCR, SCR, and delay tolerance parameters for policing. The **atm-mbs** parameter can be specified to define the burst allowed on the SCR bucket. The main difference between VBR.1 and VBR.2/VBR.3 is that the SCR bucket is for CLP0 cells only. The police rates can be expressed as percentages. The child policy can have other set actions and can match on ATM CLP1.

The following example shows how to configure a hierarchical policy for VBR.2:

```
policy-map child
    class atm_clp0
          police rate scr cellsps atm-mbs mbs cells
              conform-action action
             exceed-action action

policy-map VBR2
    class class-default
          police rate pcr cellsps delay-tolerance cdvt us
               conform-action action
               exceed-action action
      service-policy child
```

## Policy Map Configuration to Exclude OAM Cells: Example

OAM cells can be excluded from being policed by configuring the classification criteria. Since **match not** is not supported, the different classes must be explicitly configured:

The following example shows how to configure a policy map to exclude OAM cells:

```
class-map clp-0-1
 match clp 0
 match clp 1

policy-map child
    class atm-oam
```

```
        set
    class class-default
          police rate scr cellsps atm-mbs mbs cells
               conform-action action
               exceed-action action

policy-map VBR2
    class clp-0-1
          police rate pcr cellsps delay-tolerance cdvt us
               conform-action action
               exceed-action action
      service-policy child
```

## Policy Map Configuration for Dual Queue Limit: Example

Dual Queue limit configuration is supported on egress L2 ATM interfaces to differentiate between CLP0 and CLP1 cells.

**Note** For dual queue, only output service policies are supported. Input service policies are not supported.

The following example shows how to configure a policy map for Dual Queue Limit:

```
policy-map q-limit
    class class-default
        queue-limit atm-clp Threshold {[ms|us|cells]} Tail-drop-threshold {[ms|us|cells]}
```

# Verifying ATM Layer 2 QoS Configuration: Examples

The following examples show how to display policing results for an ATM interface policy map:

```
show policy-map interface ATM 0/3/0/0.12 input

ATM 0/3/0/0.12 input: pvc1

Class class-default
  Classification statistics          (packets/bytes)     (rate - kbps)
    Matched             :                 0/0               0
    Transmitted         :                 0/0               0
    Total Dropped       :                 0/0               0

show policy-map interface ATM 0/3/0/0.12 output

ATM 0/3/0/0.12 output: pvc1

Class class-default
  Classification statistics          (packets/bytes)     (rate - kbps)
    Matched             :                 0/0               0
    Transmitted         :                 0/0               0
    Total Dropped       :                 0/0               0
```

The following examples show how to display the configured QoS properties for an ATM interface policy map:

```
show qos interface atm 0/3/0/0.12 input

Interface ATM0_3_0_0.12  --   Direction: input
```

```
Policy                 :   pvc1
Total number of classes:   1
Cell Packing Criteria = CELL_PACK_TIMER_MTU
--------------------------------------------------
LEVEL1 class: classid    =   0x1
class name               =   class-default
new exp                  =   6
```

**show qos interface atm 0/3/0/0.12 output**

```
Interface ATM0_3_0_0.12  --   Direction: output
Policy                 :   pvc1
Total number of classes:   1
Cell Packing Criteria = CELL_PACK_TIMER_MTU
--------------------------------------------------
LEVEL1 class: classid    =   0x1
class name               =   class-default
new exp                  =   6
```

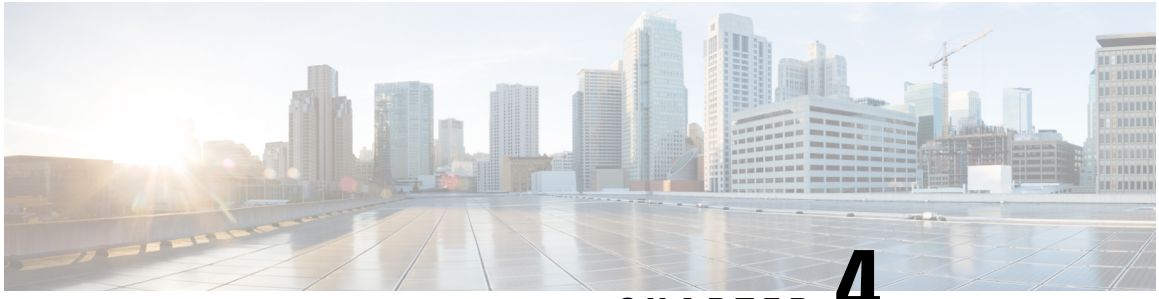

CHAPTER 4

# Advanced Configuration and Modification of the Management Ethernet Interface

This module describes the configuration of Management Ethernet interfaces.

Before you can use Telnet to access the router through the LAN IP address, you must set up a Management Ethernet interface and enable Telnet servers, as described in the *Configuring General Router Features* module of the *Cisco ASR 9000 Series Router Getting Started Guide*. This module describes how to modify the default configuration of the Management Ethernet interface after it has been configured, as described in the *Cisco ASR 9000 Series Router*

**Note** In 32-bit IOS XR OS, the management interfaces are available from XR VM. In 64-bit IOS XR OS, the Management ports on the RP/RSP are available as follows:

- MGT LAN 0 is available in XR VM.
- MGT LAN 1 is available in Admin VM.

**Note** Forwarding between physical layer interface modules (PLIM) ports and Management Ethernet interface ports is disabled by default. To enable forwarding between PLIM ports and Management Ethernet interface ports, use the **rp mgmtethernet forwarding** command.

**Note** Although the Management Ethernet interfaces on the system are present by default, the user must configure these interfaces to use them for accessing the router, using protocols and applications such as Simple Network Management Protocol (SNMP), Common Object Request Broker Architecture (CORBA), HTTP, extensible markup language (XML), TFTP, Telnet, and command-line interface (CLI).

### Feature History for Configuring Management Ethernet Interfaces

| Release | Modification |
|---|---|

| | |
|---|---|
| Release 2.0 | This feature was introduced on theCisco CRS-1 Router. |
| Release 3.2 | This feature was first supported on the.Cisco XR 12000 Series Router |
| Release 3.7.2 | This feature was introduced. |


- Advanced Configuration and Modification of the Management Ethernet Interface, on page 76
- Prerequisites for Configuring Management Ethernet Interfaces, on page 77
- Information About Configuring Management Ethernet Interfaces, on page 77
- How to Perform Advanced Management Ethernet Interface Configuration, on page 78
- Configuration Examples for Management Ethernet Interfaces, on page 86


# Advanced Configuration and Modification of the Management Ethernet Interface

This module describes the configuration of Management Ethernet interfaces.

Before you can use Telnet to access the router through the LAN IP address, you must set up a Management Ethernet interface and enable Telnet servers, as described in the *Configuring General Router Features* module of the *Cisco ASR 9000 Series Router Getting Started Guide*. This module describes how to modify the default configuration of the Management Ethernet interface after it has been configured, as described in the *Cisco ASR 9000 Series Router*

**Note** In 32-bit IOS XR OS, the management interfaces are available from XR VM. In 64-bit IOS XR OS, the Management ports on the RP/RSP are available as follows:

- MGT LAN 0 is available in XR VM.
- MGT LAN 1 is available in Admin VM.

**Note** Forwarding between physical layer interface modules (PLIM) ports and Management Ethernet interface ports is disabled by default. To enable forwarding between PLIM ports and Management Ethernet interface ports, use the **rp mgmtethernet forwarding** command.

**Note** Although the Management Ethernet interfaces on the system are present by default, the user must configure these interfaces to use them for accessing the router, using protocols and applications such as Simple Network Management Protocol (SNMP), Common Object Request Broker Architecture (CORBA), HTTP, extensible markup language (XML), TFTP, Telnet, and command-line interface (CLI).

**Feature History for Configuring Management Ethernet Interfaces**

| Release | Modification |
|---|---|
| Release 2.0 | This feature was introduced on theCisco CRS-1 Router. |
| Release 3.2 | This feature was first supported on the.Cisco XR 12000 Series Router |
| Release 3.7.2 | This feature was introduced. |

# Prerequisites for Configuring Management Ethernet Interfaces

You must be in a user group associated with a task group that includes the proper task IDs. The command reference guides include the task IDs required for each command. If you suspect user group assignment is preventing you from using a command, contact your AAA administrator for assistance.

Before performing the Management Ethernet interface configuration procedures that are described in this chapter, be sure that the following tasks and conditions are met:

- You have performed the initial configuration of the Management Ethernet interface, as described in the *Configuring General Router Features* module of the *Cisco ASR 9000 Series Router Getting Started Guide*.
- You must be in a user group associated with a task group that includes the proper task IDs. The command reference guides include the task IDs required for each command.
- You know how to apply the generalized interface name specification *rack/slot/module/port*.

  For further information on interface naming conventions, refer to the *Cisco ASR 9000 Series Router Getting Started Guide*.

**Note** For transparent switchover, both active and standby Management Ethernet interfaces are expected to be physically connected to the same LAN or switch.

# Information About Configuring Management Ethernet Interfaces

To configure Management Ethernet interfaces, you must understand the following concept:

## Default Interface Settings

This table describes the default Management Ethernet interface settings that can be changed by manual configuration. Default settings are not displayed in the **show running-config** command output.

*Table 2: Management Ethernet Interface Default Settings*

| Parameter | Default Value | Configuration File Entry |
|---|---|---|
| Speed in Mbps | Speed is autonegotiated. | **speed** [**10** \| **100** \| **1000**]<br>To return the system to autonegotiate speed, use the **no speed** [**10** \| **100** \| **1000**] command. |
| Duplex mode | Duplex mode is autonegotiated. | **duplex** {**full** \| **half**}<br>To return the system to autonegotiated duplex operation, use the **no duplex {full \| half}** command, as appropriate. |
| MAC address | MAC address is read from the hardware burned-in address (BIA). | **mac-address** address<br>To return the device to its default MAC address, use the **no mac-address** address command. |

# How to Perform Advanced Management Ethernet Interface Configuration

This section contains the following procedures:

## Configuring a Management Ethernet Interface

Perform this task to configure a Management Ethernet interface. This procedure provides the minimal configuration required for the Management Ethernet interface.

The MTU is not configurable for the Management Ethernet Interface. The default value is 1514 bytes.

**Note** You do not need to perform this task if you have already set up the Management Ethernet interface to enable telnet servers, as described in the "*Configuring General Router* Features" *Features*module of the *Cisco ASR 9000 Series Router Getting Started Guide*.

### SUMMARY STEPS

1. **configure**
2. **interface MgmtEth** *interface-path-id*
3. **ipv4 address** *ip-address mask*
4. **mtu** *bytes*
5. **no shutdown**
6. **end** or **commit**

7. **show interfaces MgmtEth** *interface-path-id*

## DETAILED STEPS

| | Command or Action | Purpose |
|---|---|---|
| **Step 1** | **configure**<br>**Example:**<br>`RP/0/RSP0/CPU0:router# configure` | Enters global configuration mode. |
| **Step 2** | **interface MgmtEth** *interface-path-id*<br>**Example:**<br>`RP/0/RSP0/CPU0:router(config)# interface MgmtEth 0/RSP0/CPU0/0` | Enters interface configuration mode and specifies the Ethernet interface name and notation *rack*/*slot*/*module*/*port*.<br>The example indicates port 0 on the RSP card that is installed in slot 0. |
| **Step 3** | **ipv4 address** *ip-address mask*<br>**Example:**<br>`RP/0/RSP0/CPU0:router(config-if)# ipv4 address 172.18.189.38 255.255.255.224` | Assigns an IP address and subnet mask to the interface.<br>• Replace *ip-address* with the primary IPv4 address for the interface.<br>• Replace *mask* with the mask for the associated IP subnet. The network mask can be specified in either of two ways:<br>• The network mask can be a four-part dotted decimal address. For example, 255.0.0.0 indicates that each bit equal to 1 means that the corresponding address bit belongs to the network address.<br>• The network mask can be indicated as a slash (/) and number. For example, /8 indicates that the first 8 bits of the mask are ones, and the corresponding bits of the address are network address. |
| **Step 4** | **mtu** *bytes*<br>**Example:**<br>`RP/0//CPU0:router(config-if# mtu 1448` | (Optional) Sets the maximum transmission unit (MTU) byte value for the interface. The default is 1514.<br>• The default is 1514 bytes.<br>• The range for the Management Ethernet interface Interface **mtu** values is 64 to 1514 bytes. |
| **Step 5** | **no shutdown**<br>**Example:**<br>`RP/0/RSP0/CPU0:router(config-if)# no shutdown` | Removes the shutdown configuration, which removes the forced administrative down on the interface, enabling it to move to an up or down state. |
| **Step 6** | **end** or **commit**<br>**Example:**<br>`RP/0/RSP0/CPU0:router(config-if)# end` | Saves configuration changes.<br>• When you issue the **end** command, the system prompts you to commit changes: |

| | Command or Action | Purpose |
|---|---|---|
| | or<br><br>`RP/0/RSP0/CPU0:router(config-if)# commit` | `Uncommitted changes found, commit them before exiting(yes/no/cancel)? [cancel]:`<br>• Entering **yes** saves configuration changes to the running configuration file, exits the configuration session, and returns the router to EXEC mode.<br>• Entering **no** exits the configuration session and returns the router to EXEC mode without committing the configuration changes.<br>• Entering **cancel** leaves the router in the current configuration session without exiting or committing the configuration changes.<br>• Use the **commit** command to save the configuration changes to the running configuration file and remain within the configuration session. |
| **Step 7** | **show interfaces MgmtEth** *interface-path-id*<br>**Example:**<br><br>`RP/0/RSP0/CPU0:router# show interfaces MgmtEth 0/RSP0/CPU0/0` | (Optional) Displays statistics for interfaces on the router. |

# IPv6 Stateless Address Auto Configuration on Management Interface

The IPv6 Stateless Address Auto Configuration (SLAAC) is used to automatically assign IPv6 addresses to the host interfaces. This functionality can be used when the exact addresses used by the host need not be specific, as long as they are unique and properly routable. SLAAC helps in automating provisioning of the router.

IPv6 auto configuration is disabled by default. Perform this task to enable IPv6 SLAAC. The SLAAC functionality has to be enabled from the Management interface.

## SUMMARY STEPS

1. **configure**
2. **interface MgmtEth** *interface-path-id*
3. **ipv6 address autoconfig**
4. **show ipv6 interfaces** *interface-path-id*

## DETAILED STEPS

**Step 1** **configure**

**Example:**

```
RP/0/RSP0/CPU0:router# configure
```

Enters global configuration mode.

**Step 2** **interface MgmtEth** *interface-path-id*

**Example:**

```
RP/0/RSP0/CPU0:router(config)# interface MgmtEth 0/RP0/CPU0/0
```

Enters interface configuration mode on the specified Management Ethernet interface. Use the notation *rack*/*slot*/*module*/*port*.

This example indicates port 0 on the RP card that is installed in slot 0.

**Step 3** **ipv6 address autoconfig**

**Example:**

```
RP/0/RSP0/CPU0:router(config-if)# ipv6 address autoconfig
```

Enable IPv6 stateless address auto configuration on the management port.

**Step 4** **show ipv6 interfaces** *interface-path-id*

**Example:**

```
RP/0/RSP0/CPU0:router# show ipv6 interfaces gigabitEthernet 0/2/0/0
```

Displays statistics for interfaces on the router. You can see in the output shown below that IPv6 is enabled and the IPv6 addresses has been auto configured.

---

### Example

This example displays how to enable IPv6 SLAAC auto configuration on management interface:

```
RP/0/RSP0/CPU0:router# configure
RP/0/RSP0/CPU0:router(config)# interface MgmtEth 0/RP0/CPU0/1
RP/0/RSP0/CPU0:router(config)# ipv6 address autoconfig
RP/0/RSP0/CPU0:router# show ipv6 interfaces MgmtEth 0/RP0/CPU0/1

MgmtEth0/RSP0/CPU0/1 is Up, ipv6 protocol is Up, Vrfid is default (0x60000000)
  IPv6 is enabled, link-local address is fe80::cecc:ccff:fecc:cccc
  Global unicast address(es):
    25::cecc:ccff:fecc:cccc, subnet is 25::/64
    2020:abcd:1234:1001:cecc:ccff:fecc:cccc, subnet is 2020:abcd:1234:1001::/64
    20::cecc:ccff:fecc:cccc, subnet is 20::/64
    447::cecc:ccff:fecc:cccc, subnet is 447::/64
    448::cecc:ccff:fecc:cccc, subnet is 448::/64
    13::cecc:ccff:fecc:cccc, subnet is 13::/64
    3457::cecc:ccff:fecc:cccc, subnet is 3457::/64
    19::cecc:ccff:fecc:cccc, subnet is 19::/64
  Joined group address(es): ff02::1:ffcc:cccc ff02::2 ff02::1
  MTU is 1514 (1500 is available to IPv6)
  ICMP redirects are disabled
  ICMP unreachables are enabled
  ND DAD is enabled, number of DAD attempts 1
  ND reachable time is 0 milliseconds
```

```
ND cache entry limit is 1000000000
ND advertised retransmit interval is 0 milliseconds
Hosts use stateless autoconfig for addresses.
Outgoing access list is not set
Inbound  common access list is not set, access list is not set
Table Id is 0xe0800000
Complete protocol adjacency: 2
Complete glean adjacency: 0
Incomplete protocol adjacency: 0
Incomplete glean adjacency: 0
Dropped protocol request: 0
Dropped glean request: 0
```

# Configuring the Duplex Mode for a Management Ethernet Interface

Perform this task to configure the duplex mode of the Management Ethernet interfaces for the RPs.

## SUMMARY STEPS

1. **configure**
2. **interface MgmtEth** *interface-path-id*
3. **duplex** [**full** | **half**]
4. **end** or **commit**

## DETAILED STEPS

| | Command or Action | Purpose |
|---|---|---|
| **Step 1** | **configure**<br>**Example:**<br>`RP/0/RSP0/CPU0:router# configure` | Enters global configuration mode. |
| **Step 2** | **interface MgmtEth** *interface-path-id*<br>**Example:**<br>`RP/0/RSP0/CPU0:router(config)# interface MgmtEth 0/RSP0/CPU0/0` | Enters interface configuration mode and specifies the Management Ethernet interface name and instance. |
| **Step 3** | **duplex** [**full** \| **half**]<br>**Example:**<br>`RP/0/RSP0/CPU0:router(config-if)# duplex full` | Configures the interface duplex mode. Valid options are **full** or **half**.<br>**Note** • To return the system to autonegotiated duplex operation, use the **no duplex** command. |
| **Step 4** | **end** or **commit**<br>**Example:**<br>`RP/0/RSP0/CPU0:router(config-if)# end`<br>or | Saves configuration changes.<br>• When you issue the **end** command, the system prompts you to commit changes:<br>`Uncommitted changes found, commit them before` |

| | Command or Action | Purpose |
|---|---|---|
| | `RP/0/RSP0/CPU0:router(config-if)# commit` | `exiting(yes/no/cancel)? [cancel]:`<br>• Entering **yes** saves configuration changes to the running configuration file, exits the configuration session, and returns the router to EXEC mode.<br>• Entering **no** exits the configuration session and returns the router to EXEC mode without committing the configuration changes.<br>• Entering **cancel** leaves the router in the current configuration session without exiting or committing the configuration changes.<br>• Use the **commit** command to save the configuration changes to the running configuration file and remain within the configuration session. |

# Configuring the Speed for a Management Ethernet Interface

Perform this task to configure the speed of the Management Ethernet interfaces for the RPs.

### SUMMARY STEPS

1. **configure**
2. **interface MgmtEth** *interface-path-id*
3. **speed** {**10** | **100** | **1000**}
4. **end** or **commit**

### DETAILED STEPS

| | Command or Action | Purpose |
|---|---|---|
| **Step 1** | **configure**<br>**Example:**<br>`RP/0/RSP0/CPU0:router# configure` | Enters global configuration mode. |
| **Step 2** | **interface MgmtEth** *interface-path-id*<br>**Example:**<br>`RP/0/RSP0/CPU0:router(config)# interface MgmtEth 0/RSP0/CPU0/0` | Enters interface configuration mode and specifies the Management Ethernet interface name and instance. |
| **Step 3** | **speed** {**10** \| **100** \| **1000**}<br>**Example:**<br>`RP/0/RSP0/CPU0:router(config-if)# speed 100` | Configures the interface speed parameter.<br>On a Cisco ASR 9000 Series Router, valid options are 10 or 100 Mbps. |

| | Command or Action | Purpose |
|---|---|---|
| | | **Note** • The default Management Ethernet interface speed is autonegotiated.<br>• To return the system to the default autonegotiated speed, use the **no speed** command. |
| **Step 4** | **end** or **commit**<br>**Example:**<br>`RP/0/RSP0/CPU0:router(config-if)# end`<br>or<br>`RP/0/RSP0/CPU0:router(config-if)# commit` | Saves configuration changes.<br>• When you issue the **end** command, the system prompts you to commit changes:<br>`Uncommitted changes found, commit them before exiting(yes/no/cancel)? [cancel]:`<br>• Entering **yes** saves configuration changes to the running configuration file, exits the configuration session, and returns the router to EXEC mode.<br>• Entering **no** exits the configuration session and returns the router to EXEC mode without committing the configuration changes.<br>• Entering **cancel** leaves the router in the current configuration session without exiting or committing the configuration changes.<br>• Use the **commit** command to save the configuration changes to the running configuration file and remain within the configuration session. |

# Modifying the MAC Address for a Management Ethernet Interface

Perform this task to configure the MAC layer address of the Management Ethernet interfaces for the RPs.

### SUMMARY STEPS

1. **configure**
2. **interface MgmtEth** *interface-path-id*
3. **mac-address** *address*
4. **end** or **commit**

### DETAILED STEPS

| | Command or Action | Purpose |
|---|---|---|
| **Step 1** | **configure**<br>**Example:** | Enters global configuration mode. |

| | Command or Action | Purpose |
|---|---|---|
| | `RP/0/RSP0/CPU0:router# configure` | |
| **Step 2** | **interface MgmtEth** *interface-path-id*<br>**Example:**<br>`RP/0/RSP0/CPU0:router(config)# interface MgmtEth 0/RSP0/CPU0/0` | Enters interface configuration mode and specifies the Management Ethernet interface name and instance. |
| **Step 3** | **mac-address** *address*<br>**Example:**<br>`RP/0/RSP0/CPU0:router(config-if)# mac-address 0001.2468.ABCD` | Configures the MAC layer address of the Management Ethernet interface.<br>**Note** • To return the device to its default MAC address, use the **no mac-address** address command. |
| **Step 4** | **end** or **commit**<br>**Example:**<br>`RP/0/RSP0/CPU0:router(config-if)# end`<br>or<br>`RP/0/RSP0/CPU0:router(config-if)# commit` | Saves configuration changes.<br>• When you issue the **end** command, the system prompts you to commit changes:<br>`Uncommitted changes found, commit them before exiting(yes/no/cancel)? [cancel]:`<br>• Entering **yes** saves configuration changes to the running configuration file, exits the configuration session, and returns the router to EXEC mode.<br>• Entering **no** exits the configuration session and returns the router to EXEC mode without committing the configuration changes.<br>• Entering **cancel** leaves the router in the current configuration session without exiting or committing the configuration changes.<br>• Use the **commit** command to save the configuration changes to the running configuration file and remain within the configuration session. |

# Verifying Management Ethernet Interface Configuration

Perform this task to verify configuration modifications on the Management Ethernet interfaces for the RPs.

### SUMMARY STEPS

1. **show interfaces MgmtEth** *interface-path-id*
2. **show running-config interface MgmtEth** *interface-path-id*

**DETAILED STEPS**

| | Command or Action | Purpose |
|---|---|---|
| **Step 1** | **show interfaces MgmtEth** *interface-path-id*<br>**Example:**<br>`RP/0/RSP0/CPU0:router# show interfaces MgmtEth 0/RSP0/CPU0/0` | Displays the Management Ethernet interface configuration. |
| **Step 2** | **show running-config interface MgmtEth** *interface-path-id*<br>**Example:**<br>`RP/0/RSP0/CPU0:router# show running-config interface MgmtEth 0/RSP0/CPU0/0` | Displays the running configuration. |

# Configuration Examples for Management Ethernet Interfaces

This section provides the following configuration examples:

## Configuring a Management Ethernet Interface: Example

This example displays advanced configuration and verification of the Management Ethernet interface on the RP:

```
RP/0/RSP0/CPU0:router# configure
RP/0/RSP0/CPU0:router(config)# interface MgmtEth 0/RSP0RP0
RP/0/RSP0/CPU0:router(config)# ipv4 address 172.29.52.70 255.255.255.0
RP/0/RSP0/CPU0:router(config-if)# speed 100
RP/0/RSP0/CPU0:router(config-if)# duplex full
RP/0/RSP0/CPU0:router(config-if)# no shutdown
RP/0/RSP0/CPU0:router(config-if)# commit
RP/0/RSP0/CPU0:Mar 26 01:09:28.685 :ifmgr[190]:%LINK-3-UPDOWN :Interface MgmtEth0/RSP0/CPU0/0,
 changed state to Up
RP/0/RSP0/CPU0:router(config-if)# end

RP/0/RSP0/CPU0:router# show interfaces MgmtEth 0/RSP0RP0

MMgmtEth0/RSP0/CPU0/0 is up, line protocol is up
  Hardware is Management Ethernet, address is 0011.93ef.e8ea (bia 0011.93ef.e8ea
)
  Description: Connected to Lab LAN
  Internet address is 172.29.52.70/24
  MTU 1514 bytes, BW 100000 Kbit
     reliability 255/255, txload 1/255, rxload 1/255
  Encapsulation ARPA,  loopback not set,
  ARP type ARPA, ARP timeout 04:00:00
  Last clearing of "show interface" counters never
  5 minute input rate 3000 bits/sec, 7 packets/sec
  5 minute output rate 0 bits/sec, 1 packets/sec
     30445 packets input, 1839328 bytes, 64 total input drops
     0 drops for unrecognized upper-level protocol
     Received 23564 broadcast packets, 0 multicast packets
```

```
             0 runts, 0 giants, 0 throttles, 0 parity
     57 input errors, 40 CRC, 0 frame, 0 overrun, 0 ignored, 0 abort
     171672 packets output, 8029024 bytes, 0 total output drops
     Output 16 broadcast packets, 0 multicast packets
     0 output errors, 0 underruns, 0 applique, 0 resets
     0 output buffer failures, 0 output buffers swapped out
     1 carrier transitions

RP/0/RSP0/CPU0:router# show running-config interface MgmtEth 0/RSP0RP0

interface MgmtEth0/RSP0/CPU0/0
 description Connected to Lab LAN
 ipv4 address 172.29.52.70 255.255.255.0
!
```

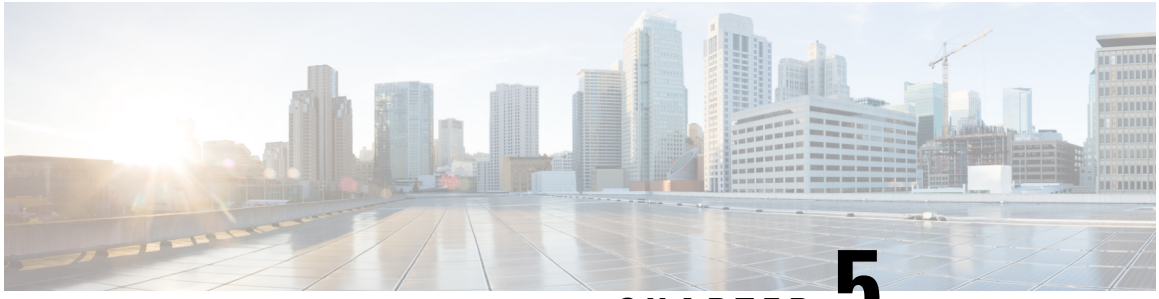

CHAPTER 5

# Configuring Ethernet Interfaces

This module describes the configuration of Ethernet interfaces.

The distributed Gigabit Ethernet and 10-Gigabit, 40-Gigabit, 100-Gigabit Ethernet architecture and features deliver network scalability and performance, while enabling service providers to offer high-density, high-bandwidth networking solutions designed to interconnect the router with other systems in POPs, including core and edge routers and Layer 2 and Layer 3 switches.

### Feature History for Configuring Ethernet Interfaces

| Release | Modification |
|---|---|
| Release 3.7.2 | Support was added on the Cisco ASR 9000 Series Router for the following line cards:<br>• 40-Port Gigabit Ethernet Medium Queue and High Queue Line Cards (A9K-40GE-B and A9K-40GE-E)<br>• 4-Port 10-Gigabit Ethernet Medium Queue and High Queue Line Cards (A9K-4T-B and A9K-4T-E)<br>• 8-Port 10-Gigabit Ethernet Medium Queue and High Queue DX Line Cards (A9K-8T/4-B and A9K-8T/4-E) (2:1 oversubscribed) |

| | |
|---|---|
| Release 3.9.0 | Support was added on the Cisco ASR 9000 Series Router for the following line cards:<br>• 40-Port Gigabit Ethernet Low Queue Line Card (A9K-40GE-L)<br>• 4-Port 10-Gigabit Ethernet Low Queue Line Card (A9K-4T-L)<br>• 8-Port 10-Gigabit Ethernet Low Queue DX Line Card (A9K-8T/4-L) (2:1 oversubscribed)<br>• 8-Port 10-Gigabit Ethernet Low and High Queue Line Card (A9K-8T-L and A9K-8T-E)<br>• 2-Port 10-Gigabit Ethernet, 20-Port Gigabit Ethernet Medium Queue and High Queue Combination Line Cards (A9K-2T20GE-B and A9K-2T20GE-L)<br>Support for these features was added:<br>• Frequency Synchronization<br>• SyncE |
| Release 3.9.1 | Support was added on the Cisco ASR 9000 Series Router for the following line cards:<br>• 8-Port 10-Gigabit Ethernet Medium Queue Line Card (A9K-8T-B)<br>• 16-Port 10-Gigabit Ethernet SFP+ Line Card (A9K-16T/8-B and A9K-16T/8-B+AIP) |
| Release 4.0.1 | Support for Layer 2 statistics collection for performance monitoring on Layer 2 subinterfaces (EFPs) is added. |
| Release 4.1.0 | Support for Link Layer Discovery Protocol (LLDP) was added.<br>**Note** LLDP is not supported under management interface for this platform. |
| Release 4.1.1 | Support was added for MAC address accounting feature. |
| Release 4.2.2 | Support for Unidirectional Link Routing (UDLR) was introduced. |

| | |
|---|---|
| Release 4.3.1 | Support was added on the Cisco ASR 9000 Series Router for these line cards:<br>• A9K-MOD80-SE<br>• A9K-MOD80-TR<br>• A9K-MOD160-SE<br>• A9K-MOD160-TR<br><br>Support was added on the Cisco ASR 9000 Series Router for these Modular Port Adaptors (MPAs):<br>• A9K-MPA-20X1GE<br>• A9K-MPA-4X10GE<br>• A9K-MPA-2X10GE<br>• A9K-MPA-8X10GE (supported only with MOD160 Line cards)<br>• A9K-MPA-2X40GE (supported only with MOD160 Line cards)<br>• A9K-MPA-1X40GE |
| Release 5.3.1 | Support for IRB with Provider Backbone Bridge (PBB). |
| Release 6.2.1 | Link Degrade Alarm in Case of Link Loss Changing by 2 dB from the Preset Value |

• Configuring Ethernet Interfaces, on page 91
• Prerequisites for Configuring Ethernet Interfaces, on page 93
• Information About Configuring Ethernet, on page 94
• How to Configure Ethernet, on page 114
• Configuration Examples for Ethernet, on page 135

# Configuring Ethernet Interfaces

This module describes the configuration of Ethernet interfaces.

The distributed Gigabit Ethernet and 10-Gigabit, 40-Gigabit, 100-Gigabit Ethernet architecture and features deliver network scalability and performance, while enabling service providers to offer high-density, high-bandwidth networking solutions designed to interconnect the router with other systems in POPs, including core and edge routers and Layer 2 and Layer 3 switches.

### Feature History for Configuring Ethernet Interfaces

| Release | Modification |
|---|---|

| | |
|---|---|
| Release 3.7.2 | Support was added on the Cisco ASR 9000 Series Router for the following line cards:<br>• 40-Port Gigabit Ethernet Medium Queue and High Queue Line Cards (A9K-40GE-B and A9K-40GE-E)<br>• 4-Port 10-Gigabit Ethernet Medium Queue and High Queue Line Cards (A9K-4T-B and A9K-4T-E)<br>• 8-Port 10-Gigabit Ethernet Medium Queue and High Queue DX Line Cards (A9K-8T/4-B and A9K-8T/4-E) (2:1 oversubscribed) |
| Release 3.9.0 | Support was added on the Cisco ASR 9000 Series Router for the following line cards:<br>• 40-Port Gigabit Ethernet Low Queue Line Card (A9K-40GE-L)<br>• 4-Port 10-Gigabit Ethernet Low Queue Line Card (A9K-4T-L)<br>• 8-Port 10-Gigabit Ethernet Low Queue DX Line Card (A9K-8T/4-L) (2:1 oversubscribed)<br>• 8-Port 10-Gigabit Ethernet Low and High Queue Line Card (A9K-8T-L and A9K-8T-E)<br>• 2-Port 10-Gigabit Ethernet, 20-Port Gigabit Ethernet Medium Queue and High Queue Combination Line Cards (A9K-2T20GE-B and A9K-2T20GE-L)<br><br>Support for these features was added:<br>• Frequency Synchronization<br>• SyncE |
| Release 3.9.1 | Support was added on the Cisco ASR 9000 Series Router for the following line cards:<br>• 8-Port 10-Gigabit Ethernet Medium Queue Line Card (A9K-8T-B)<br>• 16-Port 10-Gigabit Ethernet SFP+ Line Card (A9K-16T/8-B and A9K-16T/8-B+AIP) |
| Release 4.0.1 | Support for Layer 2 statistics collection for performance monitoring on Layer 2 subinterfaces (EFPs) is added. |

| | |
|---|---|
| Release 4.1.0 | Support for Link Layer Discovery Protocol (LLDP) was added.<br>**Note** LLDP is not supported under management interface for this platform. |
| Release 4.1.1 | Support was added for MAC address accounting feature. |
| Release 4.2.2 | Support for Unidirectional Link Routing (UDLR) was introduced. |
| Release 4.3.1 | Support was added on the Cisco ASR 9000 Series Router for these line cards:<br>• A9K-MOD80-SE<br>• A9K-MOD80-TR<br>• A9K-MOD160-SE<br>• A9K-MOD160-TR<br>Support was added on the Cisco ASR 9000 Series Router for these Modular Port Adaptors (MPAs):<br>• A9K-MPA-20X1GE<br>• A9K-MPA-4X10GE<br>• A9K-MPA-2X10GE<br>• A9K-MPA-8X10GE (supported only with MOD160 Line cards)<br>• A9K-MPA-2X40GE (supported only with MOD160 Line cards)<br>• A9K-MPA-1X40GE |
| Release 5.3.1 | Support for IRB with Provider Backbone Bridge (PBB). |
| Release 6.2.1 | Link Degrade Alarm in Case of Link Loss Changing by 2 dB from the Preset Value |

# Prerequisites for Configuring Ethernet Interfaces

You must be in a user group associated with a task group that includes the proper task IDs. The command reference guides include the task IDs required for each command. If you suspect user group assignment is preventing you from using a command, contact your AAA administrator for assistance.

Before configuring Ethernet interfaces, be sure that these tasks and conditions are met:

- Confirm that at least one of these line cards supported on the router is installed:

- 2-Port 10-Gigabit Ethernet, 20-Port Gigabit Ethernet Combination line card (A9K-2T20GE-B and A9K-2T20GE-L)
- 4-Port 10-Gigabit Ethernet line card (A9K-4T-L, -B, or -E)
- 8-Port 10-Gigabit Ethernet DX line card (A9K-8T/4-L, -B, or -E)
- 8-Port 10-Gigabit Ethernet line card (A9K-8T-L, -B, or -E)
- 16-Port 10-Gigabit Ethernet SFP+ line card (A9K-16T/8-B and A9K-16T/8-B+AIP)
- 40-Port Gigabit Ethernet line card (A9K-40GE-L, -B, or -E)
- 24-Port 10-Gigabit Ethernet Line Card
- 36-Port 10-Gigabit Ethernet Line Card
- 2-Port 100-Gigabit Ethernet Line Card
- ASR 9000 Mod80 Modular Line Card, Service Edge Optimized with modular port adapters
- ASR 9000 Mod80 Modular Line Card, Packet Transport Optimized with modular port adapters
- ASR 9000 Mod160 Modular Line Card, Service Edge Optimized with modular port adapters
- ASR 9000 Mod160 Modular Line Card, Packet Transport Optimized with modular port adapters

- Know the interface IP address.
- You know how to apply the specify the generalized interface name with the generalized notation *rack/slot/module/port*.

# Information About Configuring Ethernet

Ethernet is defined by the IEEE 802.3 international standard. It enables the connection of up to 1024 nodes over coaxial, twisted-pair, or fiber-optic cable.

The Cisco ASR 9000 Series Router supports Gigabit Ethernet (1000 Mbps),10-Gigabit Ethernet (10 Gbps), 40-Gigabit Ethernet (40 Gbps), and 100-Gigabit Ethernet (100 Gbps) interfaces.

This section provides the following information sections:

## 16-Port 10-Gigabit Ethernet SFP+ Line Card

The 16-Port10-Gigabit Ethernet SFP+ line card is a Small Form Factor (SFP transceiver) optical line card introduced in Cisco IOS XR Release 3.9.1 on the Cisco ASR 9000 Series Router. The 16-Port10-Gigabit Ethernet SFP+ line card supports all of the Gigabit Ethernet commands and configurations currently supported on the router.

The 16-Port10-Gigabit Ethernet SFP+ line card is compatible with all existing Cisco ASR 9000 Series Router line cards, route/switch processors (RSPs), and chassis.

### Features

The 16-Port10-Gigabit Ethernet SFP+ line card supports these features:

- 16 10-Gigabit Ethernet ports
- 128 10-Gigabit Ethernet ports per system
- 1.28 Tbps per system
- 160 Gbps forwarding
- 120 Gbps bidirectional performance
- SR/LR/ER SFP+ optics
- Feature parity with existing line cards
- Unicast and multicast forwarding at 160 Gbps, with zero packet loss during RSP switchover

**Restrictions**

The following features are not supported on the 16-Port10-Gigabit Ethernet SFP+ line card:

- DWDM (G.709)

# Cisco ASR 9000 Modular Line Cards

The Cisco ASR 9000 Series modular line cards provides a flexible solution to support multiple combinations of Ethernet ports, all in a single slot of the Cisco ASR 9000 Series Aggregation Services Routers. Modular line cards support a wide range of interfaces and densities offering the benefits of network scalability with lower initial costs and ease of upgrades.

The Cisco ASR 9000 Series modular line cards are designed for the Cisco ASR9000 Series Router which accepts pluggable modules. It allows you to cost effectively address lower density Gigabit Ethernet,10-Gigabit Ethernet, and 40-Gigabit Ethernet traffic. This line card is developed based on the ASR 9000 Enhanced Ethernet Network Processor (NP) and allows you to configure different interface types and also conserve chassis slots.

The Cisco ASR 9000 Series modular line cards accept two Ethernet Plugs (EP). Each Ethernet Plug provides optics, and support circuitry in order to provide GE, 10GE or 40GE ports.

The two versions of Modular Line Cards are:

- Cisco ASR 9000 Mod80 Modular Line Card – 2 ASR 9000 Enhanced Ethernet Network Processors (NP) which supports 2 pluggable Ethernet Plugs(EP), and 1 NP for each EP.
- Cisco ASR 9000 Mod160 Modular Line Card – 4 ASR 9000 Enhanced Ethernet Network Processors which supports 2 pluggable Ethernet Plugs, and 2 NPs for each EP.

**Note** A9K-MPA-20X1GE supports a speed of 10Mbps or 100Mbps when using only GLC-TE optics, regardless of MOD models.

## Restrictions on Module Port Adaptors

The two MPAs, A9K-MPA-8X10GE and A9K-MPA-2X40GE are supported only in A9K-MOD160-SE and A9K-MOD160-TR Line cards.

These are the specifications of the MPAs:

- A9K-MPA-8X10GE is supported only on the 160 Gigabyte Modular Line Card.
- A9K-MPA-8X10GE is not supported on 80 Gigabyte Modular Line Card.
- A9K-MPA-8X10GE is not supported on the Cisco ASR 9001 Chassis.
- A9K-MPA-8X10GE uses SFP+ Optics. The supported optics are SFP+ LR, SFP+ SR and SFP+ DWDM optics.

All other MPAs are supported in both the flavors of A9K-MOD80-SE/TR and A9K-MOD160-SE/TR Line Cards. For more information on these line cards, see *Cisco ASR 9000 Series Aggregation Services Router Ethernet Line Card Installation Guide* and *Cisco ASR 9000 Series Aggregation Services Router Overview and Reference Guide*.

# Default Configuration Values for Gigabit Ethernet and 10-Gigabit Ethernet

This table describes the default interface configuration parameters that are present when an interface is enabled on a Gigabit Ethernet or 10-Gigabit Ethernet modular services card and its associated PLIM.

**Note** You must use the **shutdown** command to bring an interface administratively down. The interface default is **no shutdown**. When a modular services card is first inserted into the router, if there is no established preconfiguration for it, the configuration manager adds a shutdown item to its configuration. This shutdown can be removed only be entering the **no shutdown** command.

***Table 3: Gigabit Ethernet and 10-Gigabit Ethernet Modular Services Card Default Configuration Values***

| Parameter | Configuration File Entry | Default Value |
|---|---|---|
| MAC accounting | **mac-accounting** | **off** |
| Flow control | **flow-control** | egress on ingress off |
| MTU | **mtu** | • 1514 bytes for normal frames<br>• 1518 bytes for 802.1Q tagged frames.<br>• 1522 bytes for Q-in-Q frames. |
| MAC address | **mac address** | Hardware burned-in address (BIA) |

# Default Configuration Values for Fast Ethernet

***Table 4: Fast Ethernet Default Configuration Values***

| Parameter | Configuration File Entry | Default Value |
|---|---|---|
| MAC accounting | **mac-accounting** | **off** |

| Parameter | Configuration File Entry | Default Value |
|---|---|---|
| Duplex operation | **duplex full**<br>**duplex half** | Auto-negotiates duplex operation |
| MTU | **mtu** | 1500 bytes |
| Interface speed | **speed** | 100 Mbps |
| Auto-negotiation | **negotiation auto** | **disable** |

# Layer 2 VPN on Ethernet Interfaces

Layer 2 Virtual Private Network (L2VPN) connections emulate the behavior of a LAN across an L2 switched, IP or MPLS-enabled IP network, allowing Ethernet devices to communicate with each other as if they were connected to a common LAN segment.

The L2VPN feature enables service providers (SPs) to provide Layer 2 services to geographically disparate customer sites. Typically, an SP uses an access network to connect the customer to the core network. On the Cisco ASR 9000 Series Router, this access network is typically Ethernet.

Traffic from the customer travels over this link to the edge of the SP core network. The traffic then tunnels through an L2VPN over the SP core network to another edge router. The edge router sends the traffic down another attachment circuit (AC) to the customer's remote site.

On the Cisco ASR 9000 Series Router, an AC is an interface that is attached to an L2VPN component, such as a bridge domain, pseudowire, or local connect.

The L2VPN feature enables users to implement different types of end-to-end services.

Cisco IOS XR Software supports a point-to-point end-to-end service, where two Ethernet circuits are connected together. An L2VPN Ethernet port can operate in one of two modes:

- Port Mode—In this mode, all packets reaching the port are sent over the PW (pseudowire), regardless of any VLAN tags that are present on the packets. In VLAN mode, the configuration is performed under the l2transport configuration mode.
- VLAN Mode—Each VLAN on a CE (customer edge) or access network to PE (provider edge) link can be configured as a separate L2VPN connection (using either VC type 4 or VC type 5). In VLAN mode, the configuration is performed under the individual subinterface.

**Note** The system sets a limit of 24K single vlan tags per NP and a 64K LC limit on the following line cards:

- A9K-MOD400-SE
- A9K-MOD400-CM
- A9K-MOD200-SE/CM
- Cisco ASR 9000 Series 24-port and 48-port dual-rate 10GE/1GE SE/CM
- A9K-8x100 SE/CM
- A99-8x100 SE/CM

Switching can take place in three ways:

- AC-to-PW—Traffic reaching the PE is tunneled over a PW (and conversely, traffic arriving over the PW is sent out over the AC). This is the most common scenario.
- Local switching—Traffic arriving on one AC is immediately sent out of another AC without passing through a pseudowire.
- PW stitching—Traffic arriving on a PW is not sent to an AC, but is sent back into the core over another PW.

Keep the following in mind when configuring L2VPN on an Ethernet interface:

- L2VPN links support QoS (Quality of Service) and MTU (maximum transmission unit) configuration.
- If your network requires that packets are transported transparently, you may need to modify the packet's destination MAC (Media Access Control) address at the edge of the Service Provider (SP) network. This prevents the packet from being consumed by the devices in the SP network.

Use the **show interfaces** command to display AC and PW information.

To configure a point-to-point pseudowire xconnect on an AC, refer to these documents:

- *Cisco ASR 9000 Series Aggregation Services Router L2VPN and Ethernet Services Configuration Guide.*
- *Cisco ASR 9000 Series Aggregation Services Router L2VPN and Ethernet Services Command Reference*

To attach Layer 2 service policies, such as QoS, to the Ethernet interface, refer to the appropriate Cisco IOS XR software configuration guide.

# Gigabit Ethernet Protocol Standards Overview

The Gigabit Ethernet interfaces support the following protocol standards:

These standards are further described in the sections that follow.

## IEEE 802.3 Physical Ethernet Infrastructure

The IEEE 802.3 protocol standards define the physical layer and MAC sublayer of the data link layer of wired Ethernet. IEEE 802.3 uses Carrier Sense Multiple Access with Collision Detection (CSMA/CD) access at a variety of speeds over a variety of physical media. The IEEE 802.3 standard covers 10 Mbps Ethernet. Extensions to the IEEE 802.3 standard specify implementations for Gigabit Ethernet, 10-Gigabit Ethernet, and Fast Ethernet.

## IEEE 802.3ab 1000BASE-T Gigabit Ethernet

The IEEE 802.3ab protocol standards, or Gigabit Ethernet over copper (also known as 1000BaseT) is an extension of the existing Fast Ethernet standard. It specifies Gigabit Ethernet operation over the Category 5e/6 cabling systems already installed, making it a highly cost-effective solution. As a result, most copper-based environments that run Fast Ethernet can also run Gigabit Ethernet over the existing network infrastructure to dramatically boost network performance for demanding applications.

## IEEE 802.3z 1000 Mbps Gigabit Ethernet

Gigabit Ethernet builds on top of the Ethernet protocol, but increases speed tenfold over Fast Ethernet to 1000 Mbps, or 1 Gbps. Gigabit Ethernet allows Ethernet to scale from 10 or 100 Mbps at the desktop to 100 Mbps up to 1000 Mbps in the data center. Gigabit Ethernet conforms to the IEEE 802.3z protocol standard.

By leveraging the current Ethernet standard and the installed base of Ethernet and Fast Ethernet switches and routers, network managers do not need to retrain and relearn a new technology in order to provide support for Gigabit Ethernet.

## IEEE 802.3ae 10 Gbps Ethernet

Under the International Standards Organization's Open Systems Interconnection (OSI) model, Ethernet is fundamentally a Layer 2 protocol. 10-Gigabit Ethernet uses the IEEE 802.3 Ethernet MAC protocol, the IEEE 802.3 Ethernet frame format, and the minimum and maximum IEEE 802.3 frame size. 10 Gbps Ethernet conforms to the IEEE 802.3ae protocol standards.

Just as 1000BASE-X and 1000BASE-T (Gigabit Ethernet) remained true to the Ethernet model, 10-Gigabit Ethernet continues the natural evolution of Ethernet in speed and distance. Because it is a full-duplex only and fiber-only technology, it does not need the carrier-sensing multiple-access with the CSMA/CD protocol that defines slower, half-duplex Ethernet technologies. In every other respect, 10-Gigabit Ethernet remains true to the original Ethernet model.

## IEEE 802.3ba 100 Gbps Ethernet

IEEE 802.3ba is supported on the Cisco 1-Port 100-Gigabit Ethernet PLIM beginning in Cisco IOS XR 4.0.1.

# MAC Address

A MAC address is a unique 6-byte address that identifies the interface at Layer 2.

# MAC Accounting

The MAC address accounting feature provides accounting information for IP traffic based on the source and destination MAC addresses on LAN interfaces. This feature calculates the total packet and byte counts for a

LAN interface that receives or sends IP packets to or from a unique MAC address. It also records a time stamp for the last packet received or sent.

These statistics are used for traffic monitoring, debugging and billing. For example, with this feature you can determine the volume of traffic that is being sent to and/or received from various peers at NAPS/peering points. This feature is currently supported on Ethernet, FastEthernet, and bundle interfaces and supports Cisco Express Forwarding (CEF), distributed CEF (dCEF), flow, and optimum switching.

**Note** A maximum of 512 MAC addresses per trunk interface are supported for MAC address accounting.

# Ethernet MTU

The Ethernet maximum transmission unit (MTU) is the size of the largest frame, minus the 4-byte frame check sequence (FCS), that can be transmitted on the Ethernet network. Every physical network along the destination of a packet can have a different MTU.

Cisco IOS XR software supports two types of frame forwarding processes:

- Fragmentation for IPV4 packets–In this process, IPv4 packets are fragmented as necessary to fit within the MTU of the next-hop physical network.

  **Note** IPv6 does not support fragmentation.

- MTU discovery process determines largest packet size–This process is available for all IPV6 devices, and for originating IPv4 devices. In this process, the originating IP device determines the size of the largest IPv6 or IPV4 packet that can be sent without being fragmented. The largest packet is equal to the smallest MTU of any network between the IP source and the IP destination devices. If a packet is larger than the smallest MTU of all the networks in its path, that packet will be fragmented as necessary. This process ensures that the originating device does not send an IP packet that is too large.

Jumbo frame support is automatically enable for frames that exceed the standard frame size. The default value is 1514 for standard frames and 1518 for 802.1Q tagged frames. These numbers exclude the 4-byte frame check sequence (FCS).

**Note** ASIC on 9000v considers all the packets greater than 1514 byte as oversized frame.

# Flow Control on Ethernet Interfaces

The flow control used on 10-Gigabit Ethernet interfaces consists of periodically sending flow control pause frames. It is fundamentally different from the usual full- and half-duplex flow control used on standard management interfaces. Flow control can be activated or deactivated for ingress traffic only. It is automatically implemented for egress traffic.

# 802.1Q VLAN

A VLAN is a group of devices on one or more LANs that are configured so that they can communicate as if they were attached to the same wire, when in fact they are located on a number of different LAN segments. Because VLANs are based on logical instead of physical connections, it is very flexible for user and host management, bandwidth allocation, and resource optimization.

The IEEE's 802.1Q protocol standard addresses the problem of breaking large networks into smaller parts so broadcast and multicast traffic does not consume more bandwidth than necessary. The standard also helps provide a higher level of security between segments of internal networks.

The 802.1Q specification establishes a standard method for inserting VLAN membership information into Ethernet frames.

# VRRP

The Virtual Router Redundancy Protocol (VRRP) eliminates the single point of failure inherent in the static default routed environment. VRRP specifies an election protocol that dynamically assigns responsibility for a virtual router to one of the VPN concentrators on a LAN. The VRRP VPN concentrator controlling the IP addresses associated with a virtual router is termed as the primary concentrator, and forwards packets sent to those IP addresses. When the primary concentrator becomes unavailable, a backup VPN concentrator takes over.

For more information on VRRP, see the *Implementing VRRP* module of *Cisco ASR 9000 Series Router IP Addresses and Services Configuration Guide*.

# HSRP

Hot Standby Routing Protocol (HSRP) is a proprietary protocol from Cisco. HSRP is a routing protocol that provides backup to a router in the event of failure. Several routers are connected to the same segment of an Ethernet, FDDI, or token-ring network and work together to present the appearance of a single virtual router on the LAN. The routers share the same IP and MAC addresses and therefore, in the event of failure of one router, the hosts on the LAN are able to continue forwarding packets to a consistent IP and MAC address. The transfer of routing responsibilities from one device to another is transparent to the user.

HSRP is designed to support non disruptive switchover of IP traffic in certain circumstances and to allow hosts to appear to use a single router and to maintain connectivity even if the actual first hop router they are using fails. In other words, HSRP protects against the failure of the first hop router when the source host cannot learn the IP address of the first hop router dynamically. Multiple routers participate in HSRP and in concert create the illusion of a single virtual router. HSRP ensures that one and only one of the routers is forwarding packets on behalf of the virtual router. End hosts forward their packets to the virtual router.

The router forwarding packets is known as the *active router*. A standby router is selected to replace the active router should it fail. HSRP provides a mechanism for determining active and standby routers, using the IP addresses on the participating routers. If an active router fails a standby router can take over without a major interruption in the host's connectivity.

HSRP runs on top of User Datagram Protocol (UDP), and uses port number 1985. Routers use their actual IP address as the source address for protocol packets, not the virtual IP address, so that the HSRP routers can identify each other.

For more information on HSRP, see the *Implementing HSRP* module of *Cisco ASR 9000 Series Router Cisco IOS XR*

# Link Autonegotiation on Ethernet Interfaces

Link autonegotiation ensures that devices that share a link segment are automatically configured with the highest performance mode of interoperation. Use the **negotiation auto** command in interface configuration mode to enable link autonegotiation on an Ethernet interface. On line card Ethernet interfaces, link autonegotiation is disabled by default.

**Note** The **negotiation auto** command is available on Gigabit Ethernet interfaces only.

This table describes the performance of the system for different combinations of the speed modes. The specified command produces the resulting system action, provided that you have configured autonegotiation on the interface.

***Table 5: Relationship Between duplex and speed Commands***

| duplex Command | speed Command | |
|---|---|---|
| **full-duplex** | **no speed** | Forces full duplex and auto-negotiates for speed. |
| **full-duplex** | **speed 1000** | Forces full duplex and 1000 Mbps. |
| **full-duplex** | **speed 100** | Forces full duplex and 100 Mbps. |
| **full-duplex** | **speed 10** | Forces full duplex and 10 Mbps. |
| **half-duplex** | **no speed** | Forces half duplex and auto-negotiates for speed. |
| **half-duplex** | **speed 1000** | Forces half duplex and 1000 Mbps. |
| **half-duplex** | **speed 100** | Forces half duplex and 100 Mbps. |
| **half-duplex** | **speed 10** | Forces half duplex and 10 Mbps. |

# Fast Polling for WAN-PHY

Fast Ethernet interfaces must be continuously monitored in order to detect any link that is not working due to BER errors (bit error rate) and to bring down the interface connected to that link. The Fast Polling feature polls interfaces at a fast rate and brings down the interface in case of BER errors, thereby minimizing service impact. The Fast Polling feature for WAN-PHY reduces convergence time to 150 ms on the ASR 9000 Enhanced Ethernet line card and the ASR 9000 High Density 100GE Ethernet line cards with 10G and higher rate ports.

To configure the fast polling for WAN-PHY on ASR 9000 Enhanced Ethernet line card, use the **wanphy poll-timer** *value-in-milliseconds* command in configuration mode.

The fast polling for WAN-PHY on ASR 9000 High Density 100GE Ethernet line card is enabled by default.

# Early Indication of Link Loss Change

This feature helps in early detection of a link loss between two devices and prevents any service impact. To enable this feature user must configure a receiving optical power threshold value. Whenever the receiving power crosses the threshold, the power degrade alarm is raised. The alram resets after the power exceeds threshold value by 2db.

For example, consider you have configured receiving optical power threshold value to -10db. When the input power on the interface reduces below -10db due to fiber degradation, then the optical power alarm is raised. After fiber degradation is attended power value will improve. Once the power value crosses above -8db, that is 2db more than threshold configured, then the alarm resets.

To configure the receiving power optical threshold value, use **optical-power alarm rx** <*value in db*> command in interface configuration mode.

Use this show command to view the alarm status:

- **show controllers** <***ethernet-interface***> **internal**

Use this command to view threshold value configured, and the minimum and maximum threshold value:

- **show controllers** <***ethernet-interface***> **control**

# Subinterfaces on the Cisco ASR 9000 Series Router

In Cisco IOS XR, interfaces are, by default, main interfaces. A main interface is also called a trunk interface, which is not to be confused with the usage of the word trunk in the context of VLAN trunking.

There are three types of trunk interfaces:

- Physical
- Bundle

On the Cisco ASR 9000 Series Router, physical interfaces are automatically created when the router recognizes a card and its physical interfaces. However, bundle interfaces are not automatically created. They are created when they are configured by the user.

The following configuration samples are examples of trunk interfaces being created:

- interface gigabitethernet 0/5/0/0
- interface bundle-ether 1

A subinterface is a logical interface that is created under a trunk interface.

To create a subinterface, the user must first identify a trunk interface under which to place it. In the case of bundle interfaces, if one does not already exist, a bundle interface must be created before any subinterfaces can be created under it.

The user then assigns a subinterface number to the subinterface to be created. The subinterface number must be a positive integer from zero to some high value. For a given trunk interface, each subinterface under it must have a unique value.

Subinterface numbers do not need to be contiguous or in numeric order. For example, the following subinterfaces numbers would be valid under one trunk interface:

1001, 0, 97, 96, 100000

Subinterfaces can never have the same subinterface number under one trunk.

In the following example, the card in slot 5 has trunk interface, GigabitEthernet 0/5/0/0. A subinterface, GigabitEthernet 0/5/0/0.0, is created under it.

```
RP/0/RSP0/CPU0:router#  conf
Mon Sep 21 11:12:11.722 EDT
RP/0/RSP0/CPU0:router(config)#  interface GigabitEthernet0/5/0/0.0
RP/0/RSP0/CPU0:router(config-subif)# encapsulation dot1q 100
RP/0/RSP0/CPU0:router(config-subif)# commit

RP/0/RSP0/CPU0:Sep 21 11:12:34.819 : config[65794]: %MGBL-CONFIG-6-DB_COMMIT : Configuration
 committed by user 'root'. Use 'show configuration commit changes 1000000152' to view the
changes.

RP/0/RSP0/CPU0:router(config-subif)# end

RP/0/RSP0/CPU0:Sep 21 11:12:35.633 : config[65794]: %MGBL-SYS-5-CONFIG_I : Configured from
 console by root
RP/0/RSP0/CPU0:router#
```

The **show run** command displays the trunk interface first, then the subinterfaces in ascending numerical order.

```
RP/0/RSP0/CPU0:router# show run | begin GigabitEthernet0/5/0/0
Mon Sep 21 11:15:42.654 EDT
Building configuration...
interface GigabitEthernet0/5/0/0
 shutdown
!
interface GigabitEthernet0/5/0/0.0
 encapsulation dot1q 100
!
interface GigabitEthernet0/5/0/1
 shutdown
!
```

When a subinterface is first created, the Cisco ASR 9000 Series Router recognizes it as an interface that, with few exceptions, is interchangeable with a trunk interface. After the new subinterface is configured further, the **show interface** command can display it along with its unique counters:

The following example shows the display output for the trunk interface, GigabitEthernet 0/5/0/0, followed by the display output for the subinterface GigabitEthernet 0/5/0/0.0.

```
RP/0/RSP0/CPU0:router# show interface gigabitEthernet 0/5/0/0
Mon Sep 21 11:12:51.068 EDT
GigabitEthernet0/5/0/0 is administratively down, line protocol is administratively down.
  Interface state transitions: 0
  Hardware is GigabitEthernet, address is 0024.f71b.0ca8 (bia 0024.f71b.0ca8)
  Internet address is Unknown
  MTU 1514 bytes, BW 1000000 Kbit
     reliability 255/255, txload 0/255, rxload 0/255
  Encapsulation 802.1Q Virtual LAN,
  Full-duplex, 1000Mb/s, SXFD, link type is force-up
  output flow control is off, input flow control is off
  loopback not set,
  ARP type ARPA, ARP timeout 04:00:00
  Last input never, output never
  Last clearing of "show interface" counters never
  5 minute input rate 0 bits/sec, 0 packets/sec
  5 minute output rate 0 bits/sec, 0 packets/sec
```

```
     0 packets input, 0 bytes, 0 total input drops
     0 drops for unrecognized upper-level protocol
     Received 0 broadcast packets, 0 multicast packets
              0 runts, 0 giants, 0 throttles, 0 parity
     0 input errors, 0 CRC, 0 frame, 0 overrun, 0 ignored, 0 abort
     0 packets output, 0 bytes, 0 total output drops
     Output 0 broadcast packets, 0 multicast packets
     0 output errors, 0 underruns, 0 applique, 0 resets
     0 output buffer failures, 0 output buffers swapped out
     0 carrier transitions


RP/0/RSP0/CPU0:router# show interface gigabitEthernet0/5/0/0.0
Mon Sep 21 11:12:55.657 EDT
GigabitEthernet0/5/0/0.0 is administratively down, line protocol is administratively down.
  Interface state transitions: 0
  Hardware is VLAN sub-interface(s), address is 0024.f71b.0ca8
  Internet address is Unknown
  MTU 1518 bytes, BW 1000000 Kbit
     reliability 255/255, txload 0/255, rxload 0/255
  Encapsulation 802.1Q Virtual LAN, VLAN Id 100,  loopback not set,
  ARP type ARPA, ARP timeout 04:00:00
  Last input never, output never
  Last clearing of "show interface" counters never
  5 minute input rate 0 bits/sec, 0 packets/sec
  5 minute output rate 0 bits/sec, 0 packets/sec
     0 packets input, 0 bytes, 0 total input drops
     0 drops for unrecognized upper-level protocol
     Received 0 broadcast packets, 0 multicast packets
     0 packets output, 0 bytes, 0 total output drops
     Output 0 broadcast packets, 0 multicast packets
```

This example shows two interfaces being created at the same time: first, the bundle trunk interface, then a subinterface attached to the trunk:

```
RP/0/RSP0/CPU0:router# conf
Mon Sep 21 10:57:31.736 EDT
RP/0/RSP0/CPU0:router(config)# interface Bundle-Ether1
RP/0/RSP0/CPU0:router(config-if)# no shut
RP/0/RSP0/CPU0:router(config-if)# interface bundle-Ether1.0
RP/0/RSP0/CPU0:router(config-subif)# encapsulation dot1q 100
RP/0/RSP0/CPU0:router(config-subif)# commit
RP/0/RSP0/CPU0:Sep 21 10:58:15.305 : config[65794]: %MGBL-CONFIG-6-DB_COMMIT : C
onfiguration committed by user 'root'. Use 'show configuration commit changes 10
00000149' to view the changes.
RP/0/RSP0/CPU0:router# show run | begin Bundle-Ether1
Mon Sep 21 10:59:31.317 EDT
Building configuration..
interface Bundle-Ether1
!
interface Bundle-Ether1.0
 encapsulation dot1q 100
!
```

You delete a subinterface using the **no interface** command.

```
RP/0/RSP0/CPU0:router#
RP/0/RSP0/CPU0:router# show run | begin GigabitEthernet0/5/0/0
Mon Sep 21 11:42:27.100 EDT
Building configuration...
interface GigabitEthernet0/5/0/0
 negotiation auto
!
```

```
interface GigabitEthernet0/5/0/0.0
 encapsulation dot1q 100
!
interface GigabitEthernet0/5/0/1
 shutdown
!
RP/0/RSP0/CPU0:router# conf
Mon Sep 21 11:42:32.374 EDT
RP/0/RSP0/CPU0:router(config)# no interface GigabitEthernet0/5/0/0.0
RP/0/RSP0/CPU0:router(config)# commit
RP/0/RSP0/CPU0:Sep 21 11:42:47.237 : config[65794]: %MGBL-CONFIG-6-DB_COMMIT : Configuration
 committed by user 'root'. Use 'show configuration commit changes 1000000159' to view the
changes.
RP/0/RSP0/CPU0:router(config)# end
RP/0/RSP0/CPU0:Sep 21 11:42:50.278 : config[65794]: %MGBL-SYS-5-CONFIG_I : Configured from
 console by root
RP/0/RSP0/CPU0:router# show run | begin GigabitEthernet0/5/0/0
Mon Sep 21 11:42:57.262 EDT
Building configuration...
interface GigabitEthernet0/5/0/0
 negotiation auto
!
interface GigabitEthernet0/5/0/1
 shutdown
!
```

## Layer 2, Layer 3, and EFP's

On the Cisco ASR 9000 Series Router, a trunk interface can be either a Layer 2 or Layer 3 interface. A Layer 2 interface is configured using the **interface** command with the **l2transport** keyword. When the **l2transport** keyword is not used, the interface is a Layer 3 interface. Subinterfaces are configured as Layer 2 or Layer 3 subinterface in the same way.

A Layer 3 trunk interface or subinterface is a routed interface and can be assigned an IP address. Traffic sent on that interface is routed.

A Layer 2 trunk interface or subinterface is a switched interface and cannot be assigned an IP address. A Layer 2 interface must be connected to an L2VPN component. Once it is connected, it is called an access connection.

Subinterfaces can only be created under a Layer 3 trunk interface. Subinterfaces cannot be created under a Layer 2 trunk interface.

A Layer 3 trunk interface can have any combination of Layer 2 and Layer 3 interfaces.

The following example shows an attempt to configure a subinterface under an Layer 2 trunk and the commit errors that occur. It also shows an attempt to change the Layer 2 trunk interface to an Layer 3 interface and the errors that occur because the interface already had an IP address assigned to it.

```
RP/0/RSP0/CPU0:router# config
Mon Sep 21 12:05:33.142 EDT
RP/0/RSP0/CPU0:router(config)# interface GigabitEthernet0/5/0/0
RP/0/RSP0/CPU0:router(config-if)# ipv4 address 10.0.0.1/24
RP/0/RSP0/CPU0:router(config-if)# commit
RP/0/RSP0/CPU0:Sep 21 12:05:57.824 : config[65794]: %MGBL-CONFIG-6-DB_COMMIT : Configuration
 committed by user 'root'. Use 'show configuration commit changes 1000000160' to view the
changes.
RP/0/RSP0/CPU0:router(config-if)# end
RP/0/RSP0/CPU0:Sep 21 12:06:01.890 : config[65794]: %MGBL-SYS-5-CONFIG_I : Configured from
 console by root
RP/0/RSP0/CPU0:router# show run | begin GigabitEthernet0/5/0/0
```

```
Mon Sep 21 12:06:19.535 EDT
Building configuration...
interface GigabitEthernet0/5/0/0
 ipv4 address 10.0.0.1 255.255.255.0
 negotiation auto
!
interface GigabitEthernet0/5/0/1
 shutdown
!
RP/0/RSP0/CPU0:router#
RP/0/RSP0/CPU0:router#
RP/0/RSP0/CPU0:router# conf
Mon Sep 21 12:08:07.426 EDT
RP/0/RSP0/CPU0:router(config)# interface GigabitEthernet0/5/0/0 l2transport
RP/0/RSP0/CPU0:router(config-if-l2)# commit

% Failed to commit one or more configuration items during a pseudo-atomic operation. All
changes made have been reverted. Please issue 'show configuration failed' from this session
 to view the errors
RP/0/RSP0/CPU0:router(config-if-l2)# no ipv4 address
RP/0/RSP0/CPU0:router(config-if)# commit
RP/0/RSP0/CPU0:Sep 21 12:08:33.686 : config[65794]: %MGBL-CONFIG-6-DB_COMMIT : Configuration
 committed by user 'root'. Use 'show configuration commit changes 1000000161' to view the
changes.
RP/0/RSP0/CPU0:router(config-if)# end
RP/0/RSP0/CPU0:Sep 21 12:08:38.726 : config[65794]: %MGBL-SYS-5-CONFIG_I : Configured from
 console by root
RP/0/RSP0/CPU0:router#
RP/0/RSP0/CPU0:router# show run interface GigabitEthernet0/5/0/0
Mon Sep 21 12:09:02.471 EDT
interface GigabitEthernet0/5/0/0
 negotiation auto
 l2transport
 !
!
RP/0/RSP0/CPU0:router#
RP/0/RSP0/CPU0:router# conf
Mon Sep 21 12:09:08.658 EDT
RP/0/RSP0/CPU0:router(config)# interface GigabitEthernet0/5/0/0.0
                                                              ^
RP/0/RSP0/CPU0:router(config)# interface GigabitEthernet0/5/0/0.0
RP/0/RSP0/CPU0:router(config-subif)# commit

% Failed to commit one or more configuration items during a pseudo-atomic operation. All
changes made have been reverted. Please issue 'show configuration failed' from this session
 to view the errors
RP/0/RSP0/CPU0:router(config-subif)#
RP/0/RSP0/CPU0:router(config-subif)# interface GigabitEthernet0/5/0/0
RP/0/RSP0/CPU0:router(config-if)# no l2transport
RP/0/RSP0/CPU0:router(config-if)# interface GigabitEthernet0/5/0/0.0
RP/0/RSP0/CPU0:router(config-subif)# encapsulation dot1q 99
RP/0/RSP0/CPU0:router(config-subif)# ipv4 address 11.0.0.1/24
RP/0/RSP0/CPU0:router(config-subif)# interface GigabitEthernet0/5/0/0.1 l2transport
RP/0/RSP0/CPU0:router(config-subif)# encapsulation dot1q 700
RP/0/RSP0/CPU0:router(config-subif)# commit
RP/0/RSP0/CPU0:Sep 21 12:11:45.896 : config[65794]: %MGBL-CONFIG-6-DB_COMMIT : Configuration
 committed by user 'root'. Use 'show configuration commit changes 1000000162' to view the
changes.
RP/0/RSP0/CPU0:router(config-subif)# end
RP/0/RSP0/CPU0:Sep 21 12:11:50.133 : config[65794]: %MGBL-SYS-5-CONFIG_I : Configured from
 console by root
RP/0/RSP0/CPU0:router#
RP/0/RSP0/CPU0:router# show run | b GigabitEthernet0/5/0/0
Mon Sep 21 12:12:00.248 EDT
```

```
Building configuration...
interface GigabitEthernet0/5/0/0
 negotiation auto
!
interface GigabitEthernet0/5/0/0.0
 ipv4 address 11.0.0.1 255.255.255.0
 encapsulation dot1q 99
!
interface GigabitEthernet0/5/0/0.1 l2transport
 encapsulation dot1q 700
!
interface GigabitEthernet0/5/0/1
 shutdown
!
```

All subinterfaces must have unique encapsulation statements, so that the router can send incoming packets and frames to the correct subinterface. If a subinterface does not have an encapsulation statement, the router will not send any traffic to it.

In Cisco IOS XR, an Ethernet Flow Point (EFP) is implemented as a Layer 2 subinterface, and consequently, a Layer 2 subinterface is often called an EFP. For more information about EFPs, see the Cisco ASR 9000 Series Aggregation Services Router L2VPN and Ethernet Services Configuration Guide.

A Layer 2 trunk interface can be used as an access connection. However, a Layer 2 trunk interface is not an EFP because an EFP, by definition, is a substream of an overall stream of traffic.

Cisco IOS XR also has other restrictions on what can be configured as a Layer 2 or Layer 3 interface. Certain configuration blocks only accept Layer 3 and not Layer 2. For example, OSPF only accepts Layer 3 trunks and subinterface. Refer to the appropriate Cisco IOS XR configuration guide for other restrictions.

## Enhanced Performance Monitoring for Layer 2 Subinterfaces (EFPs)

Beginning in Cisco IOS XR Release 4.0.1, the Cisco ASR 9000 Series Router adds support for basic counters for performance monitoring on Layer 2 subinterfaces.

This section provides a summary of the new support for Layer 2 interface counters. For information about how to configure Performance Monitoring, see the "Implementing Performance Management" chapter of the Cisco ASR 9000 Series Aggregation Services Router System Monitoring Configuration Guide.

The **interface basic-counters** keyword has been added to support a new entity for performance statistics collection and display on Layer 2 interfaces in the following commands:

- **performance-mgmt statistics interface basic-counters**
- **performance-mgmt threshold interface basic-counters**
- **performance-mgmt apply statistics interface basic-counters**
- **performance-mgmt apply threshold interface basic-counters**
- **performance-mgmt apply monitor interface basic-counters**
- show performance-mgmt monitor interface basic-counters
- show performance-mgmt statistics interface basic-counters

The **performance-mgmt threshold interface basic-counters** command supports the following attribute values for Layer 2 statistics, which also appear in the **show performance-mgmt statistics interface basic-counters** and **show performance-mgmt monitor interface basic-counters** command:

| Attribute | Description |
|---|---|
| InOctets | Bytes received (64-bit) |
| InPackets | Packets received (64-bit) |
| InputQueueDrops | Input queue drops (64-bit) |
| InputTotalDrops | Inbound correct packets discarded (64-bit) |
| InputTotalErrors | Inbound incorrect packets discarded (64-bit) |
| OutOctets | Bytes sent (64-bit) |
| OutPackets | Packets sent (64-bit) |
| OutputQueueDrops | Output queue drops (64-bit) |
| OutputTotalDrops | Outband correct packets discarded (64-bit) |
| OutputTotalErrors | Outband incorrect packets discarded (64-bit) |

## Other Performance Management Enhancements

The following additional performance management enhancements are included in Cisco IOS XR Release 4.0.1:

- You can retain performance management history statistics across a process restart or route processor (RP) failover using the new **history-persistent** keyword option for the **performance-mgmt statistics interface** command.
- You can save performance management statistics to a local file using the **performance-mgmt resources dump local** command.
- You can filter performance management instances by defining a regular expression group (**performance-mgmt regular-expression** command), which includes multiple regular expression indices that specify strings to match. You apply a defined regular expression group to one or more statistics or threshold templates in the **performance-mgmt statistics interface** or **performance-mgmt thresholds** interface commands.

# Frequency Synchronization and SyncE

Cisco IOS XR Software provides support for SyncE-capable Ethernet on the Cisco ASR 9000 Series Router. Frequency Synchronization provides the ability to distribute precision clock signals around the network. Highly accurate timing signals are initially injected into the Cisco ASR 9000 Series Router in the network from an external timing technology (such as Cesium atomic clocks, or GPS), and used to clock the physical interfaces of the router. Peer routers can then recover this precision frequency from the line, and also transfer it around the network. This feature is traditionally applicable to SONET/SDH networks, but is now provided over Ethernet for Cisco ASR 9000 Series Aggregation Services Routers with Synchronous Ethernet capability. For more information, see *Cisco ASR 9000 Series Aggregation Services Router System Management Configuration Guide*.

# LLDP

**Note** LLDP is not supported on the FP-X line cards.

The Cisco Discovery Protocol (CDP) is a device discovery protocol that runs over Layer 2 (the Data Link layer) on all Cisco-manufactured devices (routers, bridges, access servers, and switches). CDP allows network management applications to automatically discover and learn about other Cisco devices connected to the network.

To support non-Cisco devices and to allow for interoperability between other devices, the Cisco ASR 9000 Series Router also supports the IEEE 802.1AB LLDP. LLDP is also a neighbor discovery protocol that is used for network devices to advertise information about themselves to other devices on the network. This protocol runs over the Data Link Layer, which allows two systems running different network layer protocols to learn about each other.

LLDP supports a set of attributes that it uses to learn information about neighbor devices. These attributes have a defined format known as a Type-Length-Value (TLV). LLDP supported devices can use TLVs to receive and send information to their neighbors. Details such as configuration information, device capabilities, and device identity can be advertised using this protocol.

In addition to the mandatory TLVs (Chassis ID, Port ID, and Time-to-Live), the router also supports the following basic management TLVs, which are optional:

- Port Description
- System Name
- System Description
- System Capabilities
- Management Address

These optional TLVs are automatically sent when LLDP is active, but you can disable them as needed using the **lldp tlv-select disable** command.

## LLDP Frame Format

LLDP frames use the IEEE 802.3 format, which consists of the following fields:

- Destination address (6 bytes)—Uses a multicast address of 01-80-C2-00-00-0E.
- Source address (6 bytes)—MAC address of the sending device or port.
- LLDP Ethertype (2 bytes)—Uses 88-CC.
- LLDP PDU (1500 bytes)—LLDP payload consisting of TLVs.
- FCS (4 bytes)—Cyclic Redundancy Check (CRC) for error checking.

## LLDP TLV Format

LLDP TLVs carry the information about neighboring devices within the LLDP PDU using the following basic format:

- TLV Header (16 bits), which includes the following fields:
  - TLV Type (7 bits)
  - TLV Information String Length (9 bits)
- TLV Information String (0 to 511 bytes)

## LLDP Operation

LLDP is a one-way protocol. The basic operation of LLDP consists of a device enabled for transmit of LLDP information sending periodic advertisements of information in LLDP frames to a receiving device.

Devices are identified using a combination of the Chassis ID and Port ID TLVs to create an MSAP (MAC Service Access Point). The receiving device saves the information about a neighbor for a certain amount time specified in the TTL TLV, before aging and removing the information.

LLDP supports the following additional operational characteristics:

- LLDP can operate independently in transmit or receive modes.
- LLDP operates as a slow protocol using only untagged frames, with transmission speeds of less than 5 frames per second.
- LLDP packets are sent when the following occurs:
  - The packet update frequency specified by the **lldp timer** command is reached. The default is 30 seconds.
  - When a change in the values of the managed objects occurs from the local system's LLDP MIB.
  - When LLDP is activated on an interface (3 frames are sent upon activation similar to CDP).
- When an LLDP frame is received, the LLDP remote services and PTOPO MIBs are updated with the information in the TLVs.
- LLDP supports the following actions on these TLV characteristics:
  - Interprets a TTL value of 0 as a request to automatically purge the information of the transmitting device. These shutdown LLDPDUs are typically sent prior to a port becoming inoperable.
  - An LLDP frame with a malformed mandatory TLV is dropped.
  - A TLV with an invalid value is ignored.
  - A copy of an unknown organizationally-specific TLV is maintained if the TTL is non-zero, for later access through network management.

## Supported LLDP Functions

The Cisco ASR 9000 Series Router supports the following LLDP functions:

- IPv4 and IPv6 management addresses—In general, both IPv4 and IPv6 addresses will be advertised if they are available, and preference is given to the address that is configured on the transmitting interface.

If the transmitting interface does not have a configured address, then the TLV will be populated with an address from another interface. The advertised LLDP IP address is implemented according to the following priority order of IP addresses for interfaces on the Cisco ASR 9000 Series Router:

- Locally configured address
- MgmtEth0/RSP0/CPU0/0
- MgmtEth0/RSP0/CPU0/1
- MgmtEth0/RSP1/CPU0/0
- MgmtEth0/RSP1/CPU0/1
- Loopback interfaces

  There are some differences between IPv4 and IPv6 address management in LLDP:

- For IPv4, as long as the IPv4 address is configured on an interface, it can be used as an LLDP management address.
- For IPv6, after the IPv6 address is configured on an interface, the interface status must be Up and pass the DAD (Duplicate Address Detection) process before it is can be used as an LLDP management address.
- LLDP is supported for the nearest physically attached, non-tunneled neighbors.
- Port ID TLVs are supported for Ethernet interfaces, subinterfaces, bundle interfaces, and bundle subinterfaces.

## Unsupported LLDP Functions

The following LLDP functions are not supported on the Cisco ASR 9000 Series Router:

- LLDP-MED organizationally unique extension—However, interoperability still exists between other devices that do support this extension.
- Tunneled neighbors, or neighbors more than one hop away.
- LLDP TLVs cannot be disabled on a per-interface basis; However, certain optional TLVs can be disabled globally.
- LLDP SNMP trap lldpRemTablesChange.

# Enabling LLDP Per Interface

When you enable LLDP globally, all interfaces that support LLDP are automatically enabled for both transmit and receive operations. However, if you want to enable LLDP per interface, perform the following configuration steps:

1. `RP/0/RSP0/CPU0:ios(config)# int gigabitEthernet 0/2/0/0`
2. `RP/0/RSP0/CPU0:ios(config-if)# no sh`
3. `RP/0/RSP0/CPU0:ios(config-if)#commit`
4. `RP/0/RSP0/CPU0:ios(config-if)#lldp ?`

5. `RP/0/RSP0/CPU0:ios(config-if)#lldp enable`

6. `RP/0/RSP0/CPU0:ios(config-if)#commit`

### Running configuration

```
RP/0/RSP0/CPU0:ios#sh running-config
Wed Jun 27 12:40:21.274 IST
Building configuration...
!! IOS XR Configuration 0.0.0
!! Last configuration change at Wed Jun 27 00:59:29 2018 by UNKNOWN
!
interface GigabitEthernet0/1/0/0
 shutdown
!
interface GigabitEthernet0/1/0/1
 shutdown
!
interface GigabitEthernet0/1/0/2
 shutdown
!
interface GigabitEthernet0/2/0/0
 Shutdown
!
interface GigabitEthernet0/2/0/1
 shutdown
!
interface GigabitEthernet0/2/0/2
 shutdown
!
end
```

### Verification

```
Verifying the config
==================
RP/0/RSP0/CPU0:ios#sh lldp interface <===== LLDP enabled only on GigEth0/2/0/0
Wed Jun 27 12:43:26.252 IST


GigabitEthernet0/2/0/0:
        Tx: enabled
        Rx: enabled
        Tx state: IDLE
        Rx state: WAIT FOR FRAME
RP/0/RSP0/CPU0:ios#

RP/0/RSP0/CPU0:ios# show lldp neighbors
Wed Jun 27 12:44:38.977 IST
Capability codes:
        (R) Router, (B) Bridge, (T) Telephone, (C) DOCSIS Cable Device
        (W) WLAN Access Point, (P) Repeater, (S) Station, (O) Other

Device ID       Local Intf          Hold-time  Capability     Port ID
ios             Gi0/2/0/0           120        R              Gi0/2/0/0       <====== LLDP
 enabled only on GigEth0/2/0/0 and neighborship seen for the same.

Total entries displayed: 1

RP/0/RSP0/CPU0:ios#
```

# Unidirectional Link Routing

Unidirectional Link Routing(UDLR) feature allows a port to unidirectionally transmit or receive traffic. Therefore, instead of using two strands of fiber for a full-duplex Gigabit Ethernet or 10Gigabit Ethernet port, UDLR uses only one strand of fiber that either transmits or receives the one-way traffic depending on the configuration. This improves the effectiveness and also enables you to double the bandwidth with existing fiber infrastructure.

Cisco IOS XR Software supports Unidirectional Link Routing feature on these line cards:

- A9K- 24T-TR 24-port 10 Gigabit Ethernet line cards
- A9K- 24T-SE 24-port 10 Gigabit Ethernet line cards
- A9K- 36T-TR 36-port 10 Gigabit Ethernet line cards
- A9K- 36T-SE 36-port 10 Gigabit Ethernet line cards

UDLR is used for applications such as video streaming, where most of the traffic is sent as unacknowledged unidirectional video broadcast streams.

# How to Configure Ethernet

This section provides the following configuration procedures:

# Configuring Ethernet Interfaces

This section provides the following configuration procedures:

## Configuring Gigabit Ethernet Interfaces

Use the following procedure to create a basic Gigabit Ethernet or 10-Gigabit Ethernet interface configuration.

### SUMMARY STEPS

1. **show version**
2. **show interfaces** [**GigabitEthernet** | **TenGigE**
3. **configure**
4. **interface** [**GigabitEthernet | TenGigE**
5. **ipv4 address** *ip-address mask*
6. **flow-control** {**bidirectional**| **egress** | **ingress**}
7. **mtu** *bytes*
8. **mac-address** *value1.value2.value3*
9. **negotiation auto**
10. **no shutdown**
11. **end** or **commit**
12. **show interfaces** [**GigabitEthernet | TenGigE**] *interface-path-id*

## DETAILED STEPS

| | Command or Action | Purpose |
|---|---|---|
| **Step 1** | **show version**<br>**Example:**<br>`RP/0/RSP0/CPU0:router# show version` | (Optional) Displays the current software version, and can also be used to confirm that the router recognizes the modular services card. |
| **Step 2** | **show interfaces** [**GigabitEthernet** \| **TenGigE**<br>**Example:**<br>`RP/0/RSP0/CPU0:router# show interface TenGigE 0/1/0/0` | (Optional) Displays the configured interface and checks the status of each interface port.<br>Possible interface types for this procedure are:<br>• GigabitEthernet<br>• TenGigE |
| **Step 3** | **configure**<br>**Example:**<br>`RP/0/RSP0/CPU0:router# configure terminal` | Enters global configuration mode. |
| **Step 4** | **interface** [**GigabitEthernet \| TenGigE**<br>**Example:**<br>`RP/0/RSP0/CPU0:router(config)# interface TenGigE 0/1/0/0` | Enters interface configuration mode and specifies the Ethernet interface name and notation *rack/slot/module/port*. Possible interface types for this procedure are:<br>• GigabitEthernet<br>• TenGigE<br>**Note** • The example indicates an 8-port 10-Gigabit Ethernet interface in modular services card slot 1. |
| **Step 5** | **ipv4 address** *ip-address mask*<br>**Example:**<br>`RP/0/RSP0/CPU0:router(config-if)# ipv4 address 172.18.189.38 255.255.255.224` | Assigns an IP address and subnet mask to the interface.<br>• Replace *ip-address* with the primary IPv4 address for the interface.<br>• Replace *mask* with the mask for the associated IP subnet. The network mask can be specified in either of two ways:<br>• The network mask can be a four-part dotted decimal address. For example, 255.0.0.0 indicates that each bit equal to 1 means that the corresponding address bit belongs to the network address.<br>• The network mask can be indicated as a slash (/) and number. For example, /8 indicates that the first 8 bits of the mask are ones, and the corresponding bits of the address are network address. |

| | Command or Action | Purpose |
|---|---|---|
| **Step 6** | **flow-control** {**bidirectional**\| **egress** \| **ingress**}<br>**Example:**<br>`RP/0/RSP0/CPU0:router(config-if)# flow control ingress` | (Optional) Enables the sending and processing of flow control pause frames.<br>• **egress**—Enables the sending of flow control pause frames in egress.<br>• **ingress**—Enables the processing of received pause frames on ingress.<br>• **bidirectional**—Enables the sending of flow control pause frames in egress and the processing of received pause frames on ingress. |
| **Step 7** | **mtu** *bytes*<br>**Example:**<br>`RP/0/RSP0/CPU0:router(config-if)# mtu 1448` | (Optional) Sets the MTU value for the interface.<br>• The default is 1514 bytes for normal frames and 1518 bytes for 802.1Q tagged frames.<br>• The range for Gigabit Ethernet and 10-Gigabit Ethernet mtu values is 64 bytes to 65535 bytes. |
| **Step 8** | **mac-address** *value1.value2.value3*<br>**Example:**<br>`RP/0/RSP0/CPU0:router(config-if)# mac address 0001.2468.ABCD` | (Optional) Sets the MAC layer address of the Management Ethernet interface.<br>• The values are the high, middle, and low 2 bytes, respectively, of the MAC address in hexadecimal. The range of each 2-byte value is 0 to ffff. |
| **Step 9** | **negotiation auto**<br>**Example:**<br>`RP/0/RSP0/CPU0:router(config-if)# negotiation auto` | (Optional) Enables autonegotiation on a Gigabit Ethernet interface.<br>• Autonegotiation must be explicitly enabled on both ends of the connection, or speed and duplex settings must be configured manually on both ends of the connection.<br>• If autonegotiation is enabled, any speed or duplex settings that you configure manually take precedence.<br>**Note** • The **negotiation auto** command is available on Gigabit Ethernet interfaces only. |
| **Step 10** | **no shutdown**<br>**Example:**<br>`RP/0/RSP0/CPU0:router(config-if)# no shutdown` | Removes the shutdown configuration, which forces an interface administratively down. |
| **Step 11** | **end** or **commit**<br>**Example:** | Saves configuration changes.<br>• When you issue the **end** command, the system prompts you to commit changes: |

| | Command or Action | Purpose |
|---|---|---|
| | `RP/0/RSP0/CPU0:router(config-if)# end`<br>or<br>`RP/0/RSP0/CPU0:router(config-if)# commit` | `Uncommitted changes found, commit them before exiting(yes/no/cancel)? [cancel]:`<br>• Entering **yes** saves configuration changes to the running configuration file, exits the configuration session, and returns the router to EXEC mode.<br>• Entering **no** exits the configuration session and returns the router to EXEC mode without committing the configuration changes.<br>• Entering **cancel** leaves the router in the current configuration session without exiting or committing the configuration changes.<br>• Use the **commit** command to save the configuration changes to the running configuration file and remain within the configuration session. |
| **Step 12** | **show interfaces** [**GigabitEthernet** \| **TenGigE**] *interface-path-id*<br>**Example:**<br>`RP/0/RSP0/CPU0:router# show interfaces TenGigE 0/3/0/0` | (Optional) Displays statistics for interfaces on the router. |

### What to do next

To configure MAC Accounting on the Ethernet interface, see the “Configuring MAC Accounting on an Ethernet Interface” section later in this module.

To configure an AC on the Ethernet port for Layer 2 VPN implementation, see the “Configuring a L2VPN Ethernet Port” section later in this module.

To attach Layer 3 service policies, such as Multiprotocol Label Switching (MPLS) or Quality of Service (QoS), to the Ethernet interface, refer to the appropriate Cisco IOS XR software configuration guide.

## Configuring a Fast Ethernet Interface

### What to do next

- To configure an AC on the Fast Ethernet port for Layer 2 VPN implementation, see the “Configuring a L2VPN Ethernet Port” section later in this module.
- To attach Layer 3 service policies, such as Multiprotocol Label Switching (MPLS) or Quality of Service (QoS), to the Fast Ethernet interface, refer to the appropriate Cisco ASR 9000 Series Router or Cisco IOS XR software configuration guide.

## Configuring MAC Accounting on an Ethernet Interface

This task explains how to configure MAC accounting on an Ethernet interface. MAC accounting has special show commands, which are illustrated in this procedure. Otherwise, the configuration is the same as configuring a basic Ethernet interface, and the steps can be combined in one configuration session. See "Configuring Gigabit Ethernet Interfaces" in this module for information about configuring the other common parameters for Ethernet interfaces.

### SUMMARY STEPS

1. **configure**
2. **interface** [**GigabitEthernet** | **TenGigE** | **fastethernet**] *interface-path-id*
3. **ipv4 address** *ip-address mask*
4. **mac-accounting {egress | ingress}**
5. **end** or **commit**
6. **show mac-accounting** *type* **location** *instance*

### DETAILED STEPS

| | Command or Action | Purpose |
|---|---|---|
| **Step 1** | **configure**<br>**Example:**<br>`RP/0/RP0/CPU0:router# configure` | Enters global configuration mode. |
| **Step 2** | **interface** [**GigabitEthernet** \| **TenGigE** \| **fastethernet**] *interface-path-id*<br>**Example:**<br>`RP/0/RP0/CPU0:router(config)# interface TenGigE 0/1/0/0` | Physical interface or virtual interface.<br>**Note** • Use the **show interfaces** command to see a list of all interfaces currently configured on the router.<br>For more information about the syntax for the router, use the question mark (**?**) online help function. |
| **Step 3** | **ipv4 address** *ip-address mask*<br>**Example:**<br>`RP/0/RP0/CPU0:router(config-if)# ipv4 address 172.18.189.38 255.255.255.224` | Assigns an IP address and subnet mask to the interface.<br>• Replace *ip-address* with the primary IPv4 address for the interface.<br>• Replace *mask* with the mask for the associated IP subnet. The network mask can be specified in either of two ways:<br>• The network mask can be a four-part dotted decimal address. For example, 255.0.0.0 indicates that each bit equal to 1 means that the corresponding address bit belongs to the network address.<br>• The network mask can be indicated as a slash (/) and number. For example, /8 indicates that the first 8 bits of the mask are ones, and the corresponding bits of the address are network address. |

| | Command or Action | Purpose |
|---|---|---|
| **Step 4** | **mac-accounting {egress \| ingress}**<br>**Example:**<br>`RP/0/RP0/CPU0:router(config-if)# mac-accounting egress` | Generates accounting information for IP traffic based on the source and destination MAC addresses on LAN interfaces.<br>• To disable MAC accounting, use the **no** form of this command. |
| **Step 5** | **end** or **commit**<br>**Example:**<br>`RP/0/RP0/CPU0:router(config-if)# end`<br>or<br>`RP/0/RP0/CPU0:router(config-if)# commit` | Saves configuration changes.<br>• When you issue the **end** command, the system prompts you to commit changes:<br>`Uncommitted changes found, commit them before exiting(yes/no/cancel)? [cancel]:`<br>• Entering **yes** saves configuration changes to the running configuration file, exits the configuration session, and returns the router to EXEC mode.<br>• Entering **no** exits the configuration session and returns the router to EXEC mode without committing the configuration changes.<br>• Entering **cancel** leaves the router in the current configuration session without exiting or committing the configuration changes.<br>• Use the **commit** command to save the configuration changes to the running configuration file and remain within the configuration session. |
| **Step 6** | **show mac-accounting** *type* **location** *instance*<br>**Example:**<br>`RP/0/RP0/CPU0:router# show mac-accounting TenGigE location 0/2/0/4` | Displays MAC accounting statistics for an interface. |

## Configuring a L2VPN Ethernet Port

Use the following procedure to configure an L2VPN Ethernet port.

**Note** The steps in this procedure configure the L2VPN Ethernet port to operate in port mode.

To configure a point-to-point pseudowire xconnect on an AC, see the Implementing MPLS Layer 2 VPNs module of the Cisco IOS XR L2VPN and Ethernet Services Configuration Guide for the Cisco CRS Router.

To attach Layer 2 service policies, such as quality of service (QoS), to the Ethernet interface, refer to the appropriate Cisco IOS XR software configuration guide.

## SUMMARY STEPS

1. **configure**
2. **interface** [**GigabitEthernet** | **TenGigE**] *interface-path-id*
3. **l2transport**
4. **l2protocol cpsv** {**tunnel** | **reverse-tunnel**}
5. **end** or **commit**
6. **show interfaces** [**GigabitEthernet** | **TenGigE**] *interface-path-id*

## DETAILED STEPS

| | Command or Action | Purpose |
|---|---|---|
| **Step 1** | **configure**<br>**Example:**<br>`RP/0/RSP0/CPU0:router# configure` | Enters global configuration mode. |
| **Step 2** | **interface** [**GigabitEthernet** | **TenGigE**] *interface-path-id*<br>**Example:**<br>`RP/0/RSP0/CPU0:router(config)# interface TenGigE 0/1/0/0` | Enters interface configuration mode and specifies the Ethernet interface name and notation *rack/slot/module/port*. Possible interface types for this procedure are:<br>• GigabitEthernet<br>• TenGigE |
| **Step 3** | **l2transport**<br>**Example:**<br>`RP/0/RSP0/CPU0:router(config-if)# l2transport` | Enables Layer 2 transport mode on a port and enter Layer 2 transport configuration mode. |
| **Step 4** | **l2protocol cpsv** {**tunnel** | **reverse-tunnel**}<br>**Example:**<br>`RP/0/RSP0/CPU0:router(config-if-l2)# l2protocol cpsv tunnel` | Configures Layer 2 protocol tunneling and protocol data unit (PDU) filtering on an Ethernet interface.<br>• **tunnel**—Specifies L2PT encapsulation on frames as they enter the interface, and de-encapsulation on frames as they exit they interface.<br>• **reverse-tunnel**—Specifies L2PT encapsulation on frames as they exit the interface, and de-encapsulation on frames as they enter the interface. |
| **Step 5** | **end** or **commit**<br>**Example:**<br>`RP/0/RSP0/CPU0:router(config-if-l2)# end`<br>or<br>`RP/0/RSP0/CPU0:router(config-if-l2)# commit` | Saves configuration changes.<br>• When you issue the **end** command, the system prompts you to commit changes:<br>`Uncommitted changes found, commit them before exiting(yes/no/cancel)? [cancel]:` |

| | Command or Action | Purpose |
|---|---|---|
| | | • Entering **yes** saves configuration changes to the running configuration file, exits the configuration session, and returns the router to EXEC mode.<br>• Entering **no** exits the configuration session and returns the router to EXEC mode without committing the configuration changes.<br>• Entering **cancel** leaves the router in the current configuration session without exiting or committing the configuration changes.<br>• Use the **commit** command to save the configuration changes to the running configuration file and remain within the configuration session. |
| **Step 6** | **show interfaces** [**GigabitEthernet** \| **TenGigE**] *interface-path-id*<br>**Example:**<br>`RP/0/RSP0/CPU0:router# show interfaces TenGigE 0/3/0/0` | (Optional) Displays statistics for interfaces on the router. |

To configure a point-to-point pseudowire xconnect on an AC, refer to these documents:

- Cisco ASR 9000 Series Aggregation Services Router L2VPN and Ethernet Services Configuration Guide
- Cisco ASR 9000 Series Aggregation Services Router VPN and Ethernet Services Command Reference

# Configuring LLDP

**Note** LLDP is not supported on the FP-X line cards.

This section includes the following configuration topics for LLDP:

## LLDP Default Configuration

This table shows the values of the LLDP default configuration on the Cisco ASR 9000 Series Router. To change the default settings, use the LLDP global configuration and LLDP interface configuration commands.

| LLDP Function | Default |
|---|---|
| LLDP global state | Disabled |
| LLDP holdtime (before discarding) | 120 seconds |
| LLDP timer (packet update frequency) | 30 seconds |

| LLDP Function | Default |
|---|---|
| LLDP reinitialization delay | 2 seconds |
| LLDP TLV selection | All TLVs are enabled for sending and receiving. |
| LLDP interface state | Enabled for both transmit and receive operation when LLDP is globally enabled. |

## Enabling LLDP Globally

To run LLDP on the router, you must enable it globally. When you enable LLDP globally, all interfaces that support LLDP are automatically enabled for both transmit and receive operations.

You can override this default operation at the interface to disable receive or transmit operations. For more information about how to selectively disable LLDP receive or transmit operations for an interface, see the Disabling LLDP Receive and Transmit Operation for an Interface.

To enable LLDP globally, complete the following steps:

### SUMMARY STEPS

1. **configure**
2. **lldp**
3. **end** or **commit**

### DETAILED STEPS

| | Command or Action | Purpose |
|---|---|---|
| **Step 1** | **configure**<br>**Example:**<br>`RP/0/RSP0/CPU0:router# configure` | Enters global configuration mode. |
| **Step 2** | **lldp**<br>**Example:**<br>`RP/0/RSP0/CPU0:router(config)#lldp` | Enables LLDP globally for both transmit and receive operation on the system. |
| **Step 3** | **end** or **commit**<br>**Example:**<br>`RP/0/RSP0/CPU0:router(config)# end`<br>or<br>`RP/0/RSP0/CPU0:router(config)# commit` | Saves configuration changes.<br>• When you issue the **end** command, the system prompts you to commit changes:<br>`Uncommitted changes found, commit them before exiting(yes/no/cancel)? [cancel]:`<br>Entering **yes** saves configuration changes to the running configuration file, exits the configuration session, and returns the router to EXEC mode. |

| | Command or Action | Purpose |
|---|---|---|
| | | Entering **no** exits the configuration session and returns the router to EXEC mode without committing the configuration changes.<br>Entering **cancel** leaves the router in the current configuration session without exiting or committing the configuration changes.<br>• Use the **commit** command to save the configuration changes to the running configuration file and remain within the configuration session. |

## Configuring Global LLDP Operational Characteristics

The LLDP Default Configuration describes the default operational characteristics for LLDP. When you enable LLDP globally on the router using the **lldp** command, these defaults are used for the protocol.

To modify the global LLDP operational characteristics such as the LLDP neighbor information holdtime, initialization delay, or packet rate, complete the following steps:

### SUMMARY STEPS

1. **configure**
2. **lldp holdtime** *seconds*
3. **lldp reinit** *seconds*
4. **lldp timer** *seconds*
5. **end** or **commit**

### DETAILED STEPS

| | Command or Action | Purpose |
|---|---|---|
| **Step 1** | **configure**<br>**Example:**<br>`RP/0/RSP0/CPU0:router# configure` | Enters global configuration mode. |
| **Step 2** | **lldp holdtime** *seconds*<br>**Example:**<br>`RP/0/RSP0/CPU0:router(config)#lldp holdtime 60` | (Optional) Specifies the length of time that information from an LLDP packet should be held by the receiving device before aging and removing it. |
| **Step 3** | **lldp reinit** *seconds*<br>**Example:**<br>`RP/0/RSP0/CPU0:router(config)# lldp reinit 4` | (Optional) Specifies the length of time to delay initialization of LLDP on an interface. |
| **Step 4** | **lldp timer** *seconds*<br>**Example:** | (Optional) Specifies the LLDP packet rate. |

| | Command or Action | Purpose |
|---|---|---|
| | `RP/0/RSP0/CPU0:router(config)#lldp reinit 60` | |
| **Step 5** | **end** or **commit**<br>**Example:**<br>`RP/0/RSP0/CPU0:router(config)# end`<br>or<br>`RP/0/RSP0/CPU0:router(config)# commit` | Saves configuration changes.<br>• When you issue the **end** command, the system prompts you to commit changes:<br>`Uncommitted changes found, commit them before exiting(yes/no/cancel)? [cancel]:`<br>• Entering **yes** saves configuration changes to the running configuration file, exits the configuration session, and returns the router to EXEC mode.<br>• Entering **no** exits the configuration session and returns the router to EXEC mode without committing the configuration changes.<br>• Entering **cancel** leaves the router in the current configuration session without exiting or committing the configuration changes.<br>• Use the **commit** command to save the configuration changes to the running configuration file and remain within the configuration session. |

## Disabling Transmission of Optional LLDP TLVs

Certain TLVs are classified as mandatory in LLDP packets, such as the Chassis ID, Port ID, and Time to Live (TTL) TLVs. These TLVs must be present in every LLDP packet. You can suppress transmission of certain other optional TLVs in LLDP packets.

To disable transmission of optional LLDP TLVs, complete the following steps:

### SUMMARY STEPS

1. **configure**
2. **lldp tlv-select** *tlv-name* **disable**
3. **end** or **commit**

### DETAILED STEPS

| | Command or Action | Purpose |
|---|---|---|
| **Step 1** | **configure**<br>**Example:**<br>`RP/0/RSP0/CPU0:router# configure` | Enters global configuration mode. |

| | Command or Action | Purpose |
|---|---|---|
| **Step 2** | **lldp tlv-select** *tlv-name* **disable**<br>**Example:**<br>`RP/0/RSP0/CPU0:router(config)# lldp tlv-select system-capabilities disable` | (Optional) Specifies that transmission of the selected TLV in LLDP packets is disabled. The *tlv-name* can be one of the following LLDP TLV types:<br>• **management-address**<br>• **port-description**<br>• **system-capabilities**<br>• **system-description**<br>• **system-name** |
| **Step 3** | **end** or **commit**<br>**Example:**<br>`RP/0/RSP0/CPU0:router(config)# end`<br>or<br>`RP/0/RSP0/CPU0:router(config)# commit` | Saves configuration changes.<br>• When you issue the **end** command, the system prompts you to commit changes:<br>`Uncommitted changes found, commit them before exiting(yes/no/cancel)? [cancel]:`<br>• Entering **yes** saves configuration changes to the running configuration file, exits the configuration session, and returns the router to EXEC mode.<br>• Entering **no** exits the configuration session and returns the router to EXEC mode without committing the configuration changes.<br>• Entering **cancel** leaves the router in the current configuration session without exiting or committing the configuration changes.<br>• Use the **commit** command to save the configuration changes to the running configuration file and remain within the configuration session. |

## Disabling LLDP Receive and Transmit Operation for an Interface

When you enable LLDP globally on the router, all supported interfaces are automatically enabled for LLDP receive and transmit operation. You can override this default by disabling these operations for a particular interface.

To disable LLDP receive and transmit operations for an interface, complete the following steps:

### SUMMARY STEPS

1. **configure**
2. **interface GigabitEthernet 0/2/0/0**
3. **lldp**
4. **receive disable**

5. **transmit disable**
6. **end** or **commit**

## DETAILED STEPS

| | Command or Action | Purpose |
|---|---|---|
| **Step 1** | **configure**<br>**Example:**<br>`RP/0/RSP0/CPU0:router# configure` | Enters global configuration mode. |
| **Step 2** | **interface GigabitEthernet 0/2/0/0**<br>**Example:**<br>`RP/0/RSP0/CPU0:router(config)#interface GigabitEthernet 0/2/0/0` | Enters interface configuration mode and specifies the Ethernet interface name and notation *rack/slot/module/port*. Possible interface types for this procedure are:<br>• GigabitEthernet<br>• TenGigE |
| **Step 3** | **lldp**<br>**Example:**<br>`RP/0/RSP0/CPU0:router(config-if)#lldp` | (Optional) Enters LLDP configuration mode for the specified interface. |
| **Step 4** | **receive disable**<br>**Example:**<br>`RP/0/RSP0/CPU0:router(config-lldp)#receive disable` | (Optional) Disables LLDP receive operations on the interface. |
| **Step 5** | **transmit disable**<br>**Example:**<br>`RP/0/RSP0/CPU0:router(config-lldp)#transmit disable` | (Optional) Disables LLDP transmit operations on the interface. |
| **Step 6** | **end** or **commit**<br>**Example:**<br>`RP/0/RSP0/CPU0:router(config)# end`<br>or<br>`RP/0/RSP0/CPU0:router(config)# commit` | Saves configuration changes.<br>• When you issue the **end** command, the system prompts you to commit changes:<br>`Uncommitted changes found, commit them before exiting(yes/no/cancel)? [cancel]:`<br>• Entering **yes** saves configuration changes to the running configuration file, exits the configuration session, and returns the router to EXEC mode.<br>• Entering **no** exits the configuration session and returns the router to EXEC mode without committing the configuration changes. |

| | Command or Action | Purpose |
|---|---|---|
| | | • Entering **cancel** leaves the router in the current configuration session without exiting or committing the configuration changes.<br>• Use the **commit** command to save the configuration changes to the running configuration file and remain within the configuration session. |

## Verifying the LLDP Configuration

This section describes how you can verify the LLDP configuration both globally and for a particular interface.

## Verifying the LLDP Global Configuration

To verify the LLDP global configuration status and operational characteristics, use the **show lldp** command as shown in the following example:

```
RP/0/RSP0/CPU0:router# show lldp
Wed Apr 13 06:16:45.510 DST
Global LLDP information:
        Status: ACTIVE
        LLDP advertisements are sent every 30 seconds
        LLDP hold time advertised is 120 seconds
        LLDP interface reinitialisation delay is 2 seconds
```

If LLDP is not enabled globally, the following output appears when you run the **show lldp** command:

```
RP/0/RSP0/CPU0:router# show lldp
Wed Apr 13 06:42:48.221 DST
% LLDP is not enabled
```

## Verifying the LLDP Interface Configuration

To verify the LLDP interface status and configuration, use the **show lldp interface** command as shown in the following example:

```
RP/0/RSP0/CPU0:router# show lldp interface GigabitEthernet 0/1/0/7
Wed Apr 13 13:22:30.501 DST


GigabitEthernet0/1/0/7:
        Tx: enabled
        Rx: enabled
        Tx state: IDLE
        Rx state: WAIT FOR FRAME
```

To monitor and maintain LLDP on the system or get information about LLDP neighbors, use one of the following commands:

| | Description |
|---|---|
| **clear lldp** | Resets LLDP traffic counters or LLDP neighbor information. |

| | Description |
|---|---|
| **show lldp entry** | Displays detailed information about LLDP neighbors. |
| **show lldp errors** | Displays LLDP error and overflow statistics. |
| **show lldp neighbors** | Displays information about LLDP neighbors. |
| **show lldp traffic** | Displays statistics for LLDP traffic. |

# Configuring UDLR

Use the following procedure to configure UDLR:

### SUMMARY STEPS

1. **configure**
2. **interface TenGigE** *interface-path-id*
3. **transport-mode** {**rx-only** | **tx-only**}
4. **end** or **commit**

### DETAILED STEPS

| | Command or Action | Purpose |
|---|---|---|
| **Step 1** | **configure**<br>**Example:**<br>`RP/0/RSP0/CPU0:router# configure` | Enters global configuration mode. |
| **Step 2** | **interface TenGigE** *interface-path-id*<br>**Example:**<br>`RP/0/RSP0/CPU0:router(config)# interface TenGigE 0/2/0/0` | Enters interface configuration mode and specifies the Ethernet interface name and notation *rack/slot/module/port*. |
| **Step 3** | **transport-mode** {**rx-only** \| **tx-only**}<br>**Example:**<br>`RP/0/RSP0/CPU0:router(config-if)# transport-mode tx-only` | Configures the 10GE UDLR mode as receive-only or transmit-only. |
| **Step 4** | **end** or **commit**<br>**Example:**<br>`RP/0/RSP0/CPU0:router(config-if)# end`<br>or<br>`RP/0/RSP0/CPU0:router(config-if)# commit` | Saves configuration changes.<br>• When you issue the **end** command, the system prompts you to commit changes:<br>`Uncommitted changes found, commit them before exiting(yes/no/cancel)? [cancel]:` |

| | Command or Action | Purpose |
|---|---|---|
| | | Entering **yes** saves configuration changes to the running configuration file, exits the configuration session, and returns the router to EXEC mode.<br>Entering **no** exits the configuration session and returns the router to EXEC mode without committing the configuration changes.<br>Entering **cancel** leaves the router in the current configuration session without exiting or committing the configuration changes.<br>• Use the **commit** command to save the configuration changes to the running configuration file and remain within the configuration session. |

# Configuring the Dual-Rate Line Cards

**Note** Oversubscription will be supported on these line cards in a future release of IOS XR 6.2.x train.

The 24-port and 48-port dual-rate line cards support GE and 10GE speeds.

**Note** See *24-Port 10-Gigabit Ethernet/Gigabit Ethernet Line Card with SFP+ or SFP* and *48-Port 10-Gigabit Ethernet/Gigabit Ethernet Line Card with SFP+ or SFP* sections in the *Cisco ASR 9000 Series Aggregation Services Router Ethernet Line Card Installation Guide* for information on the line cards.

**Note** The 24-port line card has a single Network Processor Unit (NPU). The 48-port line card has two NPUs (one for each group of 24 ports). Configuring more than 20x10GE ports per NPU could result in line drops across all ports, depending on the packet size and traffic type.

To configure the port mode for either GE or 10GE, use the **hw-module location** *location* **port-mode** *run-length***x***speed*[**,***run-length***x***speed*] command, where:

- *run-length* – The number of consecutive same-speed ports, divisible by 4. Valid values are:
  - 24-port line card: 4, 8, 12, 16, 20, 24
  - 48-port line card: 4, 8, 12, 16, 20, 24, 28, 32, 36, 40, 44, 48
- *speed* – Valid values are 1 (for GE) or 10 (for 10GE)

**Note** Observe the following restrictions:

- The total for *run-length* must equal the total number of ports (either 24 or 48).
- If you configure the speed of the first port in a set of 12 ports to 1 (GE), then all 12 ports in that set must be 1G (for example: 12x1). If you configure the speed of the first port in a set of 12 ports to 10 (10G), then ports can be mixed in groups of 4 (for example: 4x10,4x1,4x10; or 8x10,4x1; or 12x10).
  - The following example is a valid port-mode configuration on the 48-port line card:

    ```
    port-mode 4x10,8x1,12x10,12x1,12x10
    ```

  - The following example is not a valid port-mode configuration on the 48-port line card:

    ```
    port-mode 4x1,8x10,12x10,12x1,12x10
    ```

The following procedure is for configuring the port speed on the 48-port 10-Gigabit Ethernet/Gigabit Ethernet Line Cards:

1. Enter global configuration mode and specify that the console terminal will be the source of the configuration commands:

   ```
   RP/0/RSP0/CPU0:router# configure terminal
   ```

2. Specify the port mode:

   ```
   RP/0/RSP0/CPU0:router(config)# hw-module location 0/5/CPU0 port-mode
   4x10,8x1,12x10,12x1,12x10
   ```

3. Enter the **commit** command to commit all changes you made to the running configuration:

   ```
   RP/0/RSP0/CPU0:router(config)# commit
   ```

# Creating Slices on a Router

This section describes the procedures to configure slices and port-groups on the Cisco ASR 9000 Series 5th Generation Line Cards, and includes the following topics:

## Overview

Slicing is a way to transform a shared network into a set of logical networks. A network slice is a logical group of components, such as Optics (QSFP/SFP), PHY, Network Processor, and Fabric Cards. The system already has the default slicing configured when you enable it. However, you can configure the slices as per your network or service requirement.

You can enable slice configuration on the following:

Routers:

- ASR 9902
- ASR 9903

- A9903-8HG-PEC

Line cards:

- A9K-4HG-FLEX-SE/-TR
- A99-4HG-FLEX-SE/-TR

### Advantages and Benefits

- Each slice enables you to deliver traffic of up to 400 Gbps, which is the maximum capacity that an NPU can handle.
- Provides the capability to the users to choose a speed from 400GE to 10GE.

### Restrictions on Slice Configurations

- You must configure port speed on the slices in the same or decreasing order. Beginning from the highest port speed to the lowest port speed.

## Slice and Port Numbering

The following tables lists the possible group combinations on the line cards and routers:

*Table 6: Possible Configurations for Cisco ASR 9000 Series Routers and 5th Generation Line Cards*

| Router/Line card | Release | Supported Configurations |
|---|---|---|
| ASR 9902 | Release 7.4.1 | `Default: 1x100GE,1x100GE,10x10GE,10x10GE`<br>`1x100GE,1x100GE,4x25GE,10x10GE`<br>`1x100GE,4x25GE,4x25GE,1x100GE`<br>`1x100GE,1x100GE,1x100GE,1x100GE` |
| | Release 7.5.1 | `Default: 1x100GE,1x100GE,10x10GE,10x10GE`<br>`1x100GE,1x100GE,4x25GE,10x10GE`<br>`1x100GE,4x25GE,4x25GE,1x100GE`<br>`1x100GE,1x100GE,1x100GE,1x100GE`<br>**Note** The following configuration modes are not supported:<br>• 1x40GE/4x10GE<br>• 5x1GE_5x10GE |
| ASR 9903 | Release 7.4.1 | `Default: 10x10GE,10x10GE,4x10GE,UNUSED`<br>`4x25GE,4x25GE,4x25GE,4x25GE` |
| | Release 7.5.1 | `Default: 10x10GE,10x10GE,4x10GE,UNUSED`<br>`4x25GE,4x25GE,4x25GE,4x25GE` |

## Configure Slices

All configurations can be accomplished by using appropriate values for the **hw-module** command.

**Note** Slice configuration is available on A9903-8HG-PEC. For the other ports on PECs, fixed ports, or slices, use the breakout commands.

To configure the slice, use the following command:

```
configurehw-module location location slice [slice_number ] config-mode
[1x100GE,1x100GE,4x25GE,10x10GE]
```

Consider a scenario, where, you as a user or a customer wants to effectively utilize the bandwidth of the router. In this scenario, we are going to configure a slice on a ASR 9000 Series Router that has a A9903-8HG-PEC line card installed. With A9903-8HG-PEC line card, you can configure slice 4 and 5. The rest of the slices are reserved for other line cards and fixed boards.

To configure the slices on the router or the line card, perform the following steps:

1. Identify the router capability, the line cards installed on the router, and the maximum bandwidth supported. In this scenario, the maximum supported bandwidth is 400GE per Network Processor.
2. Configure slices on the line card or router by using the **configure hw-module location** *location* **slice** [*slice_number* ] config-mode command.
   a. Specify the slices, such as slice 4.
   b. Specify the speed on the ports, such as 4x25GE,4x25GE,4x25GE,4x25GE or 1x100GE,1x100GE,4x25GE,10x10GE.
   c. Save the configuration.

Now, you have successfully configured the slices on the router, which will allow you to use the network bandwidth as per your requirement, without letting the bandwidth getting wasted, which wasn't possible earlier with the port breakout functionality.

For example, you can use the 4x25GE bandwidth for a lower bandwidth consumption service, such as voice calling. And use the 1x100GE bandwidth for video calling service.

### Configuration Steps

```
router# configure terminal
router(config)# hw-module location 0/0/CPU0 slice 4 config-mode  4x25GE,4x25GE,4x25GE,4x25GE
  /* Specify the slice where you configure the groups and specify the port speeds for each
 group*/
router(config)# commit
```

### Verify Slice Configuration

Use this procedure to verify whether the slice is correctly configured.

#### Verification on ASR 9903

```
Router: #show controllers np valid-port-groups all location 0/0/CPU0
Tue Dec 21 10:47:37.522 UTC

                Node: 0/0/CPU0:
----------------------------------------------------------------

 NP0 valid-port-groups is not supported

 NP1 valid-port-groups is not supported

 NP2 valid-port-groups is not supported

 NP3 valid-port-groups is not supported

 NP4: Valid Port Groups
----+---------------------+---------------------+---------------------+---------------------
SEL | Group 0             | Group 1             | Group 2             | Group 3
----+---------------------+---------------------+---------------------+---------------------
DFLT 10x10GE               10x10GE               4x10GE                UNUSED
```

```
1    4x25GE                4x25GE                4x25GE                4x25GE

Notes:
  DFLT: SFP10g port 0-23 (default)
        DFLT is set by default or by clearing any non-default configuration using "no
hw-module loc <> slice config-mode"
     1: SFP25g port 0-15

 NP5: Valid Port Groups
----+---------------------+---------------------+---------------------+---------------------
SEL | Group 0             | Group 1             | Group 2             | Group 3
----+---------------------+---------------------+---------------------+---------------------
DFLT 10x10GE               10x10GE               4x10GE                UNUSED

1    4x25GE                4x25GE                4x25GE                4x25GE

Notes:
  DFLT: SFP10g port 24-47 (default)
        DFLT is set by default or by clearing any non-default configuration using "no
hw-module loc <> slice config-mode"
     1: SFP25g port 32-47

 NP6 valid-port-groups is not supported

 NP7 valid-port-groups is not supported

 NP8 valid-port-groups is not supported
Router: #


RP/0/RP0/CPU0:router#sh controllers np ports all location 0/0/CPU0
Tue Jan 11 10:43:35.581 UTC
                Node: 0/0/CPU0:
----------------------------------------------------------------
NP Bridge Fia                       Ports
-- ------ --- -----------------------------------------------------
0  --     0   TenGigE0/0/0/0/0 - TenGigE0/0/0/0/3, TenGigE0/0/0/1/0 - TenGigE0/0/0/1/3,
HundredGigE0/0/0/2, FortyGigE0/0/0/3/0
1  --     1   FortyGigE0/0/0/4/0, HundredGigE0/0/0/5, TenGigE0/0/0/6/0 - TenGigE0/0/0/6/3,
 FortyGigE0/0/0/7/0
2  --     2   FortyGigE0/0/0/8/0, FortyGigE0/0/0/9/0, TenGigE0/0/0/26 - TenGigE0/0/0/35,
FortyGigE0/0/0/11/0
3  --     3   FortyGigE0/0/0/12/0, HundredGigE0/0/0/13 - HundredGigE0/0/0/15
4  --     4   TwentyFiveGigE0/0/1/0 - TwentyFiveGigE0/0/1/15
5  --     5   TenGigE0/0/1/24 - TenGigE0/0/1/47
```

### Verification on A9K-4HG-FLEX-SE Line Cards

```
RP/0/RSP0/CPU0:asr-sat-host1(config)#do show controllers np valid-port-groups all location
 0/0/CPU0
Tue Dec 21 05:07:32.819 UTC

                Node: 0/0/CPU0:
----------------------------------------------------------------

 NP0: Valid Port Groups
----+---------------------+---------------------+---------------------+---------------------
SEL | Group 0             | Group 1             | Group 2             | Group 3
----+---------------------+---------------------+---------------------+---------------------
DFLT 1x100GE               1x100GE               1x100GE               1x100GE

1    1x100GE/1x40GE/4x25GE 1x100GE/1x40GE/4x25GE 1x100GE/1x40GE/4x25GE 1x100GE/1x40GE/4x25GE

2    1x100GE/1x40GE/4x25GE 1x100GE/1x40GE/4x25GE 1x100GE/1x40GE/4x25GE 10x10GE
```

```
3    1x100GE/1x40GE/4x25GE 1x100GE/1x40GE/4x25GE 10x10GE               10x10GE

4    1x100GE/1x40GE/4x25GE 10x10GE               10x10GE               10x10GE

5    10x10GE               10x10GE               10x10GE               10x10GE

Notes:
  DFLT : QSFP port 40, QSFP port 41, QSFP port 42, QSFP port 43 (default)
  Group 0: QSFP port 40 or SFP10g port 0-9   or SFP25g port 6-9
  Group 1: QSFP port 41 or SFP10g port 10-19 or SFP25g port 16-19
  Group 2: QSFP port 42 or SFP10g port 20-29 or SFP25g port 26-29
  Group 3: QSFP port 43 or SFP10g port 30-39 or SFP25g port 36-39
RP/0/RSP0/CPU0:asr-sat-host1(config)#
```

For information on breakout, see the hw-module location command.

# Configuration Examples for Ethernet

This section provides the following configuration examples:

## Configuring an Ethernet Interface: Example

The following example shows how to configure an interface for a 10-Gigabit Ethernet modular services card:

```
RP/0/RSP0/CPU0:router# configure
RP/0/RSP0/CPU0:router(config)# interface TenGigE 0/0/0/1
RP/0/RSP0/CPU0:router(config-if)# ipv4 address 172.18.189.38 255.255.255.224
RP/0/RSP0/CPU0:router(config-if)# flow-control ingress
RP/0/RSP0/CPU0:router(config-if)# mtu 1448
RP/0/RSP0/CPU0:router(config-if)# mac-address 0001.2468.ABCD
RP/0/RSP0/CPU0:router(config-if)# no shutdown
RP/0/RSP0/CPU0:router(config-if)# end
Uncommitted changes found, commit them? [yes]: yes

RP/0/RSP0/CPU0:router# show interfaces TenGigE 0/0/0/1


TenGigE0/0/0/1 is down, line protocol is down
  Hardware is TenGigE, address is 0001.2468.abcd (bia 0001.81a1.6b23)
  Internet address is 172.18.189.38/27
  MTU 1448 bytes, BW 10000000 Kbit
     reliability 0/255, txload Unknown, rxload Unknown
Encapsulation ARPA,
  Full-duplex, 10000Mb/s, LR
  output flow control is on, input flow control is on
  Encapsulation ARPA,
ARP type ARPA, ARP timeout 01:00:00
  Last clearing of "show interface" counters never
  5 minute input rate 0 bits/sec, 0 packets/sec
  5 minute output rate 0 bits/sec, 0 packets/sec
     0 packets input, 0 bytes, 0 total input drops
     0 drops for unrecognized upper-level protocol
     Received 0 broadcast packets, 0 multicast packets
              0 runts, 0 giants, 0 throttles, 0 parity
     0 input errors, 0 CRC, 0 frame, 0 overrun, 0 ignored, 0 abort
     0 packets output, 0 bytes, 0 total output drops
```

```
Output 0 broadcast packets, 0 multicast packets
0 output errors, 0 underruns, 0 applique, 0 resets
0 output buffer failures, 0 output buffers swapped out
0 carrier transitions
```

# Configuring MAC-Accounting: Example

This example indicates how to configure MAC-accounting on an Ethernet interface:

```
RP/0/RSP0/CPU0:router# configure
RP/0/RSP0/CPU0:router(config)# interface TenGigE 0/0/0/2
RP/0/RSP0/CPU0:router(config-if)# ipv4 address 172.18.189.38 255.255.255.224
RP/0/RSP0/CPU0:router(config-if)# mac-accounting egress
RP/0/RSP0/CPU0:router(config-if)# commit
RP/0/RSP0/CPU0:router(config-if)# exit
RP/0/RSP0/CPU0:router(config)# exit
```

# Configuring a Layer 2 VPN AC: Example

The following example indicates how to configure a Layer 2 VPN AC on an Ethernet interface:

```
RP/0/RSP0/CPU0:router# configure
RP/0/RSP0/CPU0:router(config)# interface TenGigE 0/0/0/2
RP/0/RSP0/CPU0:router(config-if)# l2transport
RP/0/RSP0/CPU0:router(config-if-l2)# l2protocol  tunnel
RP/0/RSP0/CPU0:router(config-if-l2)# commit
```

# Configuring LLDP: Examples

The following example shows how to enable LLDP globally on the router and modify the default LLDP operational characteristics:

```
RP/0/RSP0/CPU0:router# configure
RP/0/RSP0/CPU0:router(config)# lldp
RP/0/RSP0/CPU0:router(config)# lldp holdtime 60
RP/0/RSP0/CPU0:router(config)# lldp reinit 4
RP/0/RSP0/CPU0:router(config)# lldp timer 60
RP/0/RSP0/CPU0:router(config)# commit
```

The following example shows how to disable a specific Gigabit Ethernet interface for LLDP transmission:

```
RP/0/RSP0/CPU0:router# configure
RP/0/RSP0/CPU0:router(config)# interface GigabitEthernet 0/2/0/0
RP/0/RSP0/CPU0:router(config-if)# lldp
RP/0/RSP0/CPU0:router(config-lldp)# transmit disable
```

### Where to Go Next

When you have configured an Ethernet interface, you can configure individual VLAN subinterfaces on that Ethernet interface.

For information about modifying Ethernet management interfaces for the shelf controller (SC), route processor (RP), and distributed RP, see the Advanced Configuration and Modification of the Management Ethernet Interface on the Cisco ASR 9000 Series RouterAdvanced Configuration and Modification of the Management Ethernet Interface on the Cisco ASR 9000 Series Router module later in this document.

For information about IPv6 see the Implementing Access Lists and Prefix Lists on Cisco IOS XR Software module in the Cisco IOS XR IP Addresses and Services Configuration Guide.

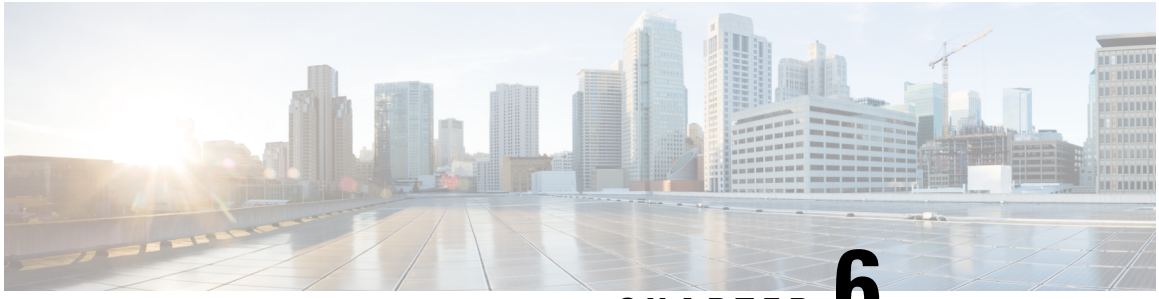

CHAPTER 6

# Configuring Ethernet OAM

This module describes the configuration of Ethernet Operations, Administration, and Maintenance (OAM) on the Cisco ASR 9000 Series Aggregation Services Routers.

### Feature History for Configuring Ethernet OAM

| Release | Modification |
|---|---|
| Release 3.7.2 | Support for the following features was introduced:<br>• Ethernet Link OAM<br>• Ethernet CFM |
| Release 3.7.3 | Support for the CFM Exploratory Linktrace feature was introduced. |
| Release 3.9.0 | Support for the Ethernet SLA feature was introduced. |
| Release 3.9.1 | Support for the following features was introduced:<br>• Ethernet CFM on Link Aggregation Group (LAG) interfaces (Ethernet bundle interfaces), Ethernet and bundle sub interfaces, and LAG member (bundle member) interfaces.<br>• EFD<br>• AIS<br>• Flexible tagging<br>• The **ethernet cfm mep domain** command is replaced by the **ethernet cfm** and **mep domain** commands. |

| | |
|---|---|
| Release 4.0.0 | Support for the following features was introduced:<br>• The **action link-fault** command is replaced by the **action uni-directional link fault** command.<br>• The **efd** keyword is added to put an interface into the line protocol down state, as an option for the following commands:<br>  • **action capabilities-conflict**<br>  • **action discovery-timeout**<br>  • **action session-down**<br>  • **action uni-directional link-fault**<br>• Uni-directional link-fault detection to identify local link-faults and send notification to a remote Ethernet OAM peer using the **uni-directional link-fault detection** command.<br>• Support for the following enhancements to Ethernet SLA was added:<br>  • Support for on-demand Ethernet SLA operations using the **ethernet sla on-demand operation** commands.<br>  • One-way delay and jitter measurements using the following new keyword options for the **statistics measure** command: **one-way-delay-ds. one-way-delay-sd. one-way-jitter-ds. one-way-jitter-sd**<br>  • Specification of a test pattern to pad loopback packets when measuring delay.<br>  • Displaying the time when the minimum (Min) and maximum (Max) values of a statistic occurred in the measurement time period in the **show ethernet sla statistics detail** command. |
| Release 4.0.1 | Support for Ethernet CFM on Multi-Chassis Link Aggregation Groups (MC-LAG) was added. |

| | |
|---|---|
| Release 4.1.0 | Support for the following feature was introduced:<br>• E-LMI<br>• Timestamps for delay packets were changed from being derived by the sytem time-of-day (NTP) clock to the DTI timing input on the clock-interfaces on the RSP.<br>• CFM Y.1731 ITU Carrier Code (ICC)-based MEG ID (MAID) format. |
| Release 4.2.0 | Support for Unidirectional Link Detection Protocol (UDLD) was introduced. |
| Release 4.3.0 | Support for ITU-T Y.1731 Synthetic Loss Measurement was introduced. |
| Release 4.3.1 | Support for ITU-T Y.1731 Loss Measurement was introduced. |
| Release 5.1.0 | Support for Ethernet Data Plane Loopback was introduced. |
| Release 5.1.2 | Support for Ethernet CFM down MEP was included. |
| Release 5.3.2 | CFM support on the Bundle over Bundle is limited as follows:<br>CFM software offload is not supported on the satellite access bundles (sub) interface over bundle ICL. If CFM is configured on any satellite access bundle interface over bundle ICL, bundle-offload configuration can not be applied. If CFM is configured only on interface in ASR 9000 series other than satellite access bundle interface over bundle ICL, then bundle-offload configuration can be applied. |

• Prerequisites for Configuring Ethernet OAM, on page 141
• Information About Configuring Ethernet OAM, on page 142
• How to Configure Ethernet OAM, on page 177
• Configuration Examples for Ethernet OAM, on page 237

# Prerequisites for Configuring Ethernet OAM

You must be in a user group associated with a task group that includes the proper task IDs. The command reference guides include the task IDs required for each command. If you suspect user group assignment is preventing you from using a command, contact your AAA administrator for assistance.

Before configuring Ethernet OAM, confirm that at least one of the Gigabit Ethernet line cards or Cisco ASR 9000 Enhanced Ethernet line cards are installed on the router.

# Information About Configuring Ethernet OAM

To configure Ethernet OAM, you should understand the following concepts:

## Ethernet Link OAM

*Table 7: Feature History Table*

Ethernet as a Metro Area Network (MAN) or a Wide Area Network (WAN) technology benefits greatly from the implementation of Operations, Administration and Maintenance (OAM) features. Ethernet link OAM features allow Service Providers to monitor the quality of the connections on a MAN or WAN. Service providers can monitor specific events, take actions on events, and if necessary, put specific interfaces into loopback mode for troubleshooting. Ethernet link OAM operates on a single, physical link and it can be configured to monitor either side or both sides of that link.

Ethernet link OAM can be configured in the following ways:

- A Link OAM profile can be configured, and this profile can be used to set the parameters for multiple interfaces.
- Link OAM can be configured directly on an interface.

  When an interface is also using a link OAM profile, specific parameters that are set in the profile can be overridden by configuring a different value directly on the interface.

An Ethernet Link OAM profile simplifies the process of configuring EOAM features on multiple interfaces. An Ethernet OAM profile, and all of its features, can be referenced by other interfaces, allowing other interfaces to inherit the features of that Ethernet OAM profile.

Individual Ethernet link OAM features can be configured on individual interfaces without being part of a profile. In these cases, the individually configured features always override the features in the profile.

The preferred method of configuring custom EOAM settings is to create an EOAM profile in Ethernet configuration mode and then attach it to an individual interface or to multiple interfaces.

These standard Ethernet Link OAM features are supported on the router:

### Neighbor Discovery

Neighbor discovery enables each end of a link to learn the OAM capabilities of the other end and establish an OAM peer relationship. Each end also can require that the peer have certain capabilities before it will establish a session. You can configure certain actions to be taken if there is a capabilities conflict or if a discovery process times out, using the **action capabilities-conflict** or **action discovery-timeout** commands.

### Link Monitoring

Link monitoring enables an OAM peer to monitor faults that cause the quality of a link to deteriorate over time. When link monitoring is enabled, an OAM peer can be configured to take action when the configured thresholds are exceeded.

## MIB Retrieval

MIB retrieval enables an OAM peer on one side of an interface to get the MIB variables from the remote side of the link. The MIB variables that are retrieved from the remote OAM peer are READ ONLY.

## Miswiring Detection (Cisco-Proprietary)

Miswiring Detection is a Cisco-proprietary feature that uses the 32-bit vendor field in every Information OAMPDU to identify potential miswiring cases.

## Remote Loopback

Remote loopback enables one side of a link to put the remote side of the link into loopback mode for testing. When remote loopback is enabled, all packets initiated by the primary side of the link are looped back to the primary side, unaltered by the remote side. In remote loopback mode, the remote side is not allowed to inject any data into the packets.

## SNMP Traps

SNMP traps can be enabled or disabled on an Ethernet OAM interface.

## Unidirectional Link Fault Detection

Unidirectional link fault detection describes an Ethernet link OAM function that runs directly on physical Ethernet interfaces (not VLAN subinterfaces or bundles) that uses a defined link fault message to signal link faults to a remote host. Unidirectional link fault detection offers similar functionality to Gigabit Ethernet and Ten Gigabit Ethernet hardware-level signaling of a link fault, but it is done at a higher protocol layer as part of Ethernet link OAM. The hardware function uses the Remote Fault Indication bit set in a frame that is signaled out-of-band, where unidirectional link fault detection signals the error using an OAMPDU.

Unidirectional link fault detection only applies to a single, physical link. When the remote host receives the link fault message, the interface can be shut down for all higher-layer protocols, and specifically, Layer 2 switching and Layer 3 routing protocols. While the fault is detected, a link fault message is sent periodically to the remote host. Once a fault is no longer detected, the link fault message is no longer sent, and the remote host can bring back the interface.

Unidirectional link fault detection is configured using the **uni-directional link-fault detection** command, and does not affect how the receipt of link-fault messages are handled by the router. Actions to be taken for the receipt of link-fault messages are configured using the **action uni-directional link-fault** command.

# Ethernet CFM

Ethernet Connectivity Fault Management (CFM) is a service-level OAM protocol that provides tools for monitoring and troubleshooting end-to-end Ethernet services per VLAN. This includes proactive connectivity monitoring, fault verification, and fault isolation. CFM uses standard Ethernet frames and can be run on any physical media that is capable of transporting Ethernet service frames. Unlike most other Ethernet protocols which are restricted to a single physical link, CFM frames can transmit across the entire end-to-end Ethernet network.

CFM is defined in two standards:

- IEEE 802.1ag—Defines the core features of the CFM protocol.

- ITU-T Y.1731—Redefines, but maintains compatibility with the features of IEEE 802.1ag, and defines some additional features.

Ethernet CFM on the Cisco ASR 9000 Series Router supports these functions of ITU-T Y.1731:

- ETH-CC, ETH-RDI, ETH-LB, ETH-LT—These are equivalent to the corresponding features defined in IEEE 802.1ag.

**Note** The Linktrace responder procedures defined in IEEE 802.1ag are used rather than the procedures defined in Y.1731; however, these are interoperable.

- ETH-AIS—The reception of ETH-LCK messages is also supported.
- ETH-DM, ETH-SLM—This is supported with the Ethernet SLA feature. For more information about Ethernet SLA, see the Ethernet SLA.

To understand how the CFM maintenance model works, you need to understand these concepts and features:

## Maintenance Domains

A *maintenance domain* describes a management space for the purpose of managing and administering a network. A domain is owned and operated by a single entity and defined by the set of interfaces internal to it and at its boundary, as shown in this figure.

***Figure 1: CFM Maintenance Domain***

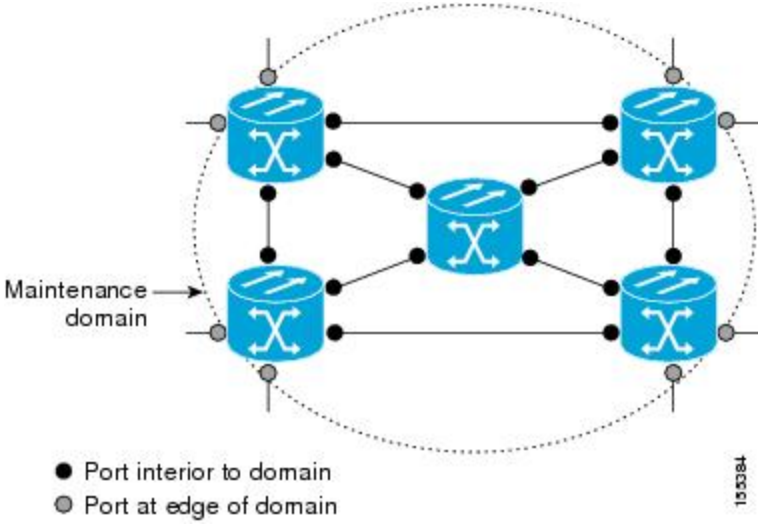


A maintenance domain is defined by the bridge ports that are provisioned within it. Domains are assigned maintenance levels, in the range of 0 to 7, by the administrator. The level of the domain is useful in defining the hierarchical relationships of multiple domains.

CFM maintenance domains allow different organizations to use CFM in the same network, but independently. For example, consider a service provider who offers a service to a customer, and to provide that service, they use two other operators in segments of the network. In this environment, CFM can be used in the following ways:

- The customer can use CFM between their CE devices, to verify and manage connectivity across the whole network.
- The service provider can use CFM between their PE devices, to verify and manage the services they are providing.
- Each operator can use CFM within their operator network, to verify and manage connectivity within their network.

Each organization uses a different CFM maintenance domain.

This figure shows an example of the different levels of maintenance domains in a network.

**Note** In CFM diagrams, the conventions are that triangles represent MEPs, pointing in the direction that the MEP sends CFM frames, and circles represent MIPs. For more information about MEPs and MIPs, see the Maintenance Points.

***Figure 2: Different CFM Maintenance Domains Across a Network***

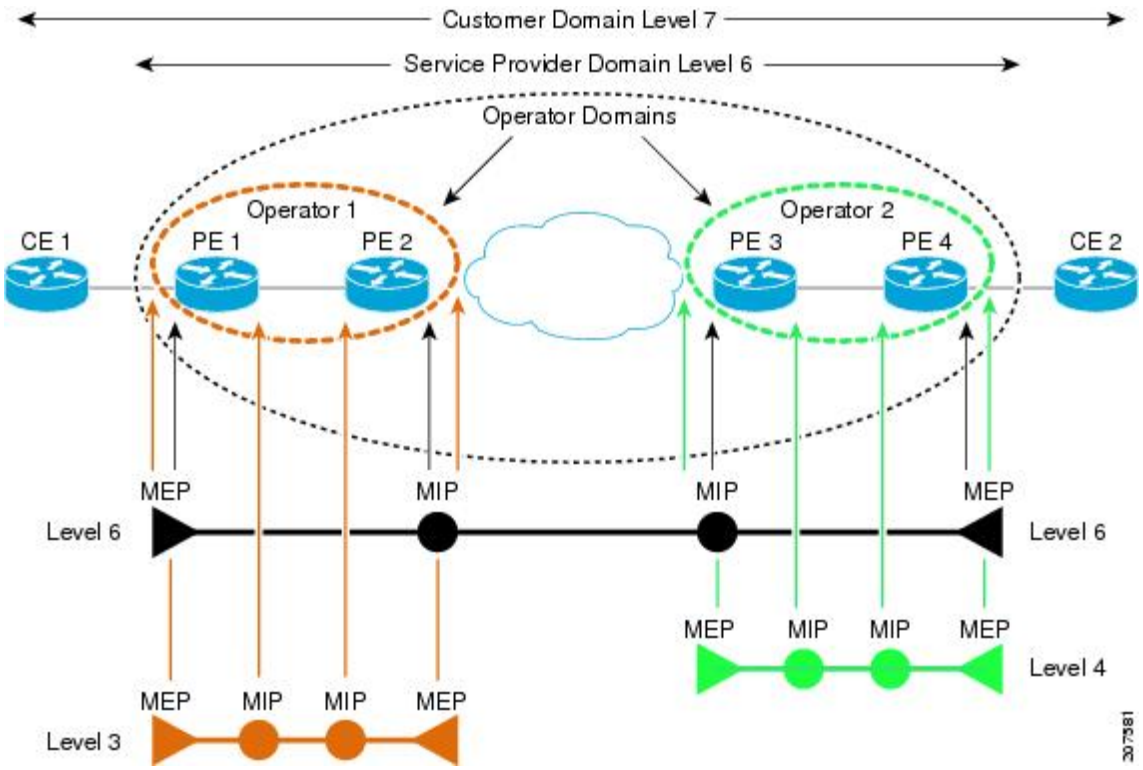


To ensure that the CFM frames for each domain do not interfere with each other, each domain is assigned a maintenance level, between 0 and 7. Where domains are nested, as in this example, the encompassing domain must have a higher level than the domain it encloses. In this case, the domain levels must be negotiated between the organizations involved. The maintenance level is carried in all CFM frames that relate to that domain.

CFM maintenance domains may touch or nest, but cannot intersect. This figure illustrates the supported structure for touching and nested domains, and the unsupported intersection of domains.

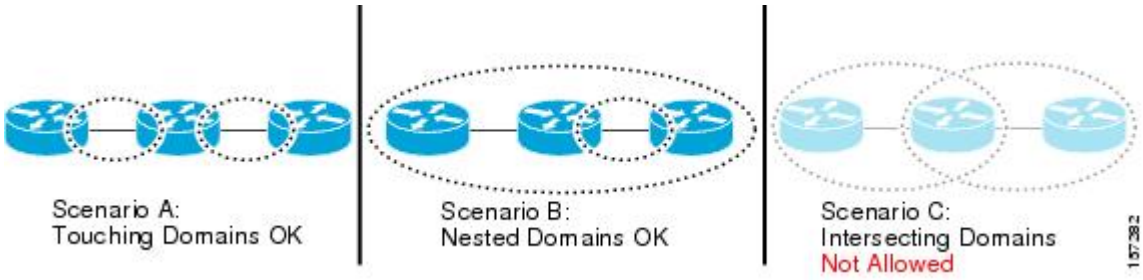


## Services

A CFM service allows an organization to partition its CFM maintenance domain, according to the connectivity within the network. For example, if the network is divided into a number of virtual LANs (VLANs), a CFM service is created for each of these. CFM can then operate independently in each service. It is important that the CFM services match the network topology, so that CFM frames relating to one service cannot be received in a different service. For example, a service provider may use a separate CFM service for each of their customers, to verify and manage connectivity between that customer's end points.

A CFM service is always associated with the maintenance domain that it operates within, and therefore with that domain's maintenance level. All CFM frames relating to the service carry the maintenance level of the corresponding domain.

**Note** CFM Services are referred to as *Maintenance Associations* in IEEE 802.1ag and as *Maintenance Entity Groups* in ITU-T Y.1731.

## Maintenance Points

A CFM *Maintenance Point* (MP) is an instance of a particular CFM service on a specific interface. CFM only operates on an interface if there is a CFM maintenance point on the interface; otherwise, CFM frames are forwarded transparently through the interface.

A maintenance point is always associated with a particular CFM service, and therefore with a particular maintenance domain at a particular level. Maintenance points generally only process CFM frames at the same level as their associated maintenance domain. Frames at a higher maintenance level are always forwarded transparently, while frames at a lower maintenance level are normally dropped. This helps enforce the maintenance domain hierarchy described in the Maintenance Domains, and ensures that CFM frames for a particular domain cannot leak out beyond the boundary of the domain.

There are two types of MP:

- Maintenance End Points (MEPs)—Created at the edge of the domain. Maintenance end points (MEPs) are members of a particular service within a domain and are responsible for sourcing and sinking CFM frames. They periodically transmit continuity check messages and receive similar messages from other MEPs within their domain. They also transmit traceroute and loopback messages at the request of the administrator. MEPs are responsible for confining CFM messages within the domain.
- Maintenance Intermediate Points (MIPs)—Created in the middle of the domain. Unlike MEPS, MIPs do allow CFM frames at their own level to be forwarded.

## MIP Creation

Unlike MEPs, MIPs are not explicitly configured on each interface. MIPs are created automatically according to the algorithm specified in the CFM 802.1ag standard. The algorithm, in brief, operates as follows for each interface:

- The bridge-domain or cross-connect for the interface is found, and all services associated with that bridge-domain or cross-connect are considered for MIP auto-creation.
- The level of the highest-level MEP on the interface is found. From among the services considered above, the service in the domain with the lowest level that is higher than the highest MEP level is selected. If there are no MEPs on the interface, the service in the domain with the lowest level is selected.
- The MIP auto-creation configuration (**mip auto-create** command) for the selected service is examined to determine whether a MIP should be created.

**Note** Configuring a MIP auto-creation policy for a service does not guarantee that a MIP will automatically be created for that service. The policy is only considered if that service is selected by the algorithm first.

## MEP and CFM Processing Overview

The boundary of a domain is an interface, rather than a bridge or host. Therefore, MEPs can be sub-divided into two categories:

- Down MEPs—Send CFM frames from the interface where they are configured, and process CFM frames received on that interface. Down MEPs transmit AIS messages upward (toward the bridge domain or cross-connect).
- Up MEPs—Send frames into the bridge relay function, as if they had been received on the interface where the MEP is configured. They process CFM frames that have been received on other interfaces, and have been switched through the bridge relay function as if they are going to be sent out of the interface where the MEP is configured. Up MEPs transmit AIS messages downward (toward the wire). However, AIS packets are only sent when there is a MIP configured on the same interface as the MEP and at the level of the MIP.

**Note** The terms *Down MEP* and *Up MEP* are defined in the IEEE 802.1ag and ITU-T Y.1731 standards, and refer to the direction that CFM frames are sent from the MEP. The terms should not be confused with the operational status of the MEP.

This figure illustrates the monitored areas for Down and Up MEPs.

*Figure 3: Monitored Areas for Down and Up MEPs*

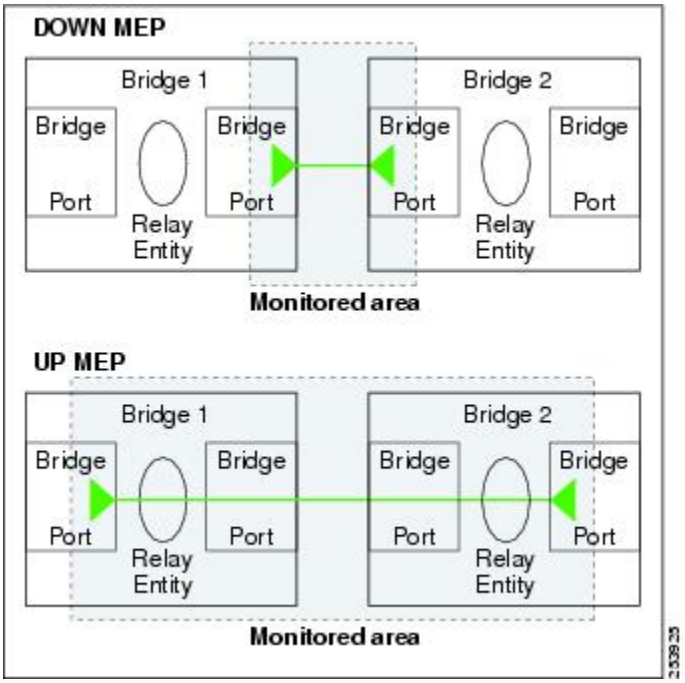


This figure shows maintenance points at different levels. Because domains are allowed to nest but not intersect (see Figure 3), a MEP at a low level always corresponds with a MEP or MIP at a higher level. In addition, only a single MIP is allowed on any interface—this is generally created in the lowest domain that exists at the interface and that does not have a MEP.

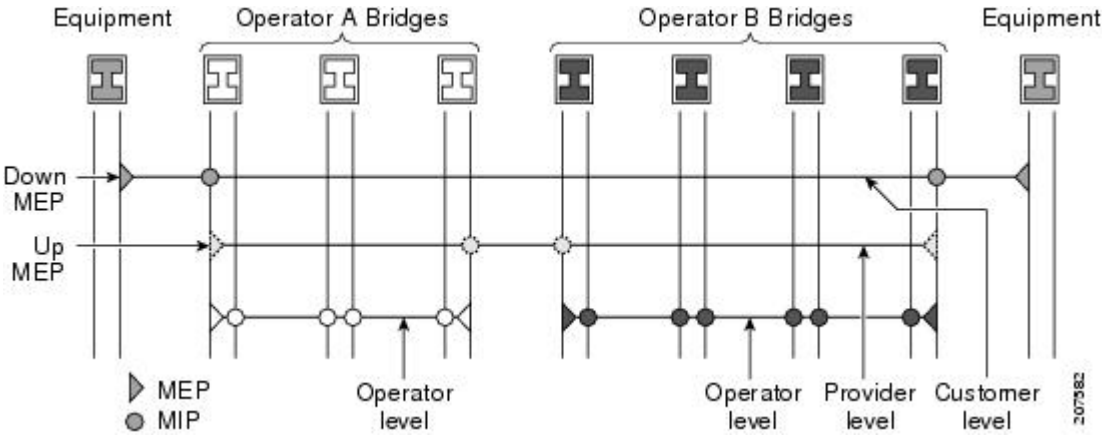


MIPs and Up MEPs can only exist on switched (Layer 2) interfaces, because they send and receive frames from the bridge relay function. Down MEPs can be created on switched (Layer 2) or routed (Layer 3) interfaces.

MEPs continue to operate normally if the interface they are created on is blocked by the Spanning Tree Protocol (STP); that is, CFM frames at the level of the MEP continue to be sent and received, according to the direction of the MEP. MEPs never allow CFM frames at the level of the MEP to be forwarded, so the STP block is maintained.

MIPs also continue to receive CFM frames at their level if the interface is STP blocked, and can respond to any received frames. However, MIPs do not allow CFM frames at the level of the MIP to be forwarded if the interface is blocked.

**Note** A separate set of CFM maintenance levels is created every time a VLAN tag is pushed onto the frame. Therefore, if CFM frames are received on an interface which pushes an additional tag, so as to "tunnel" the frames over part of the network, the CFM frames will not be processed by any MPs within the tunnel, even if they are at the same level. For example, if a CFM MP is created on an interface with an encapsulation that matches a single VLAN tag, any CFM frames that are received at the interface that have two VLAN tags will be forwarded transparently, regardless of the CFM level.

## CFM Protocol Messages

The CFM protocol consists of a number of different message types, with different purposes. All CFM messages use the CFM EtherType, and carry the CFM maintenance level for the domain to which they apply.

This section describes the following CFM messages:

## Continuity Check (IEEE 802.1ag and ITU-T Y.1731)

Continuity Check Messages (CCMs) are "heartbeat" messages exchanged periodically between all the MEPs in a service. Each MEP sends out multicast CCMs, and receives CCMs from all the other MEPs in the service—these are referred to as *peer MEPs*. This allows each MEP to discover its peer MEPs, and to verify that there is connectivity between them.

MIPs also receive CCMs. MIPs use the information to build a MAC learning database that is used when responding to Linktrace. For more information about Linktrace, see the Linktrace (IEEE 802.1ag and ITU-T Y.1731).

***Figure 4: Continuity Check Message Flow***

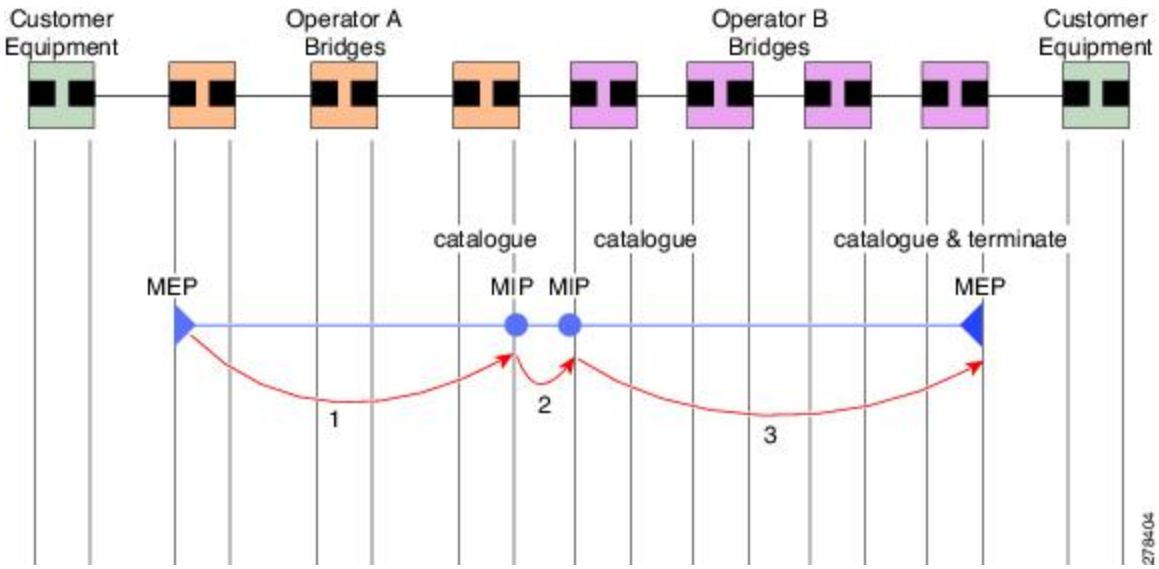


All the MEPs in a service must transmit CCMs at the same interval. IEEE 802.1ag defines 7 possible intervals that can be used:

- 10ms (applicable on the Cisco ASR 9000 Enhanced Ethernet Line Card)
- 100ms
- 1s
- 10s
- 1 minute
- 10 minutes

A MEP detects a loss of connectivity with one of its peer MEPs when some number of CCMs have been missed. This occurs when sufficient time has passed during which a certain number of CCMs were expected, given the CCM interval. This number is called the *loss threshold*, and is usually set to 3.

CCM messages carry a variety of information that allows different defects to be detected in the service. This information includes:

- A configured identifier for the domain of the transmitting MEP. This is referred to as the Maintenance Domain Identifier (MDID).
- A configured identifier for the service of the transmitting MEP. This is referred to as the Short MA Name (SMAN). Together, the MDID and the SMAN make up the Maintenance Association Identifier (MAID). The MAID must be configured identically on every MEP in the service.
- A configured numeric identifier for the MEP (the MEP ID). Each MEP in the service must be configured with a different MEP ID.
- A sequence number.
- A Remote Defect Indication (RDI). Each MEP includes this in the CCMs it is sending, if it has detected a defect relating to the CCMs it is receiving. This notifies all the MEPs in the service that a defect has been detected somewhere in the service.
- The interval at which CCMs are being transmitted.
- The status of the interface where the MEP is operating—for example, whether the interface is up, down, STP blocked, and so on.

**Note** The status of the interface (up/down) should not be confused with the direction of any MEPs on the interface (Up MEPs/Down MEPs).

These defects can be detected from received CCMs:

- Interval mismatch—The CCM interval in the received CCM does not match the interval that the MEP is sending CCMs.
- Level mismatch—A MEP has received a CCM carrying a lower maintenance level than the MEPs own level.
- Loop—A CCM is received with the source MAC address equal to the MAC address of the interface where the MEP is operating.
- Configuration error—A CCM is received with the same MEP ID as the MEP ID configured for the receiving MEP.

- Cross-connect—A CCM is received with an MAID that does not match the locally configured MAID. This generally indicates a VLAN misconfiguration within the network, such that CCMs from one service are leaking into a different service.
- Peer interface down—A CCM is received that indicates the interface on the peer is down.
- Remote defect indication—A CCM is received carrying a remote defect indication.

**Note** This defect does not cause the MEP to include a remote defect indication in the CCMs that it is sending.

Out-of-sequence CCMs can also be detected by monitoring the sequence number in the received CCMs from each peer MEP. However, this is not considered a CCM defect.

## Loopback (IEEE 802.1ag and ITU-T Y.1731)

Loopback Messages (LBM) and Loopback Replies (LBR) are used to verify connectivity between a local MEP and a particular remote MP. At the request of the administrator, a local MEP sends unicast LBMs to the remote MP. On receiving each LBM, the target maintenance point sends an LBR back to the originating MEP. Loopback indicates whether the destination is reachable or not—it does not allow hop-by-hop discovery of the path. It is similar in concept to an ICMP Echo (ping). Since loopback messages are destined for unicast addresses, they are forwarded like normal data traffic, while observing the maintenance levels. At each device that the loopback reaches, if the outgoing interface is known (in the bridge's forwarding database), then the frame is sent out on that interface. If the outgoing interface is not known, then the message is flooded on all interfaces.

This figure shows an example of CFM loopback message flow between a MEP and MIP.

***Figure 5: Loopback Messages***

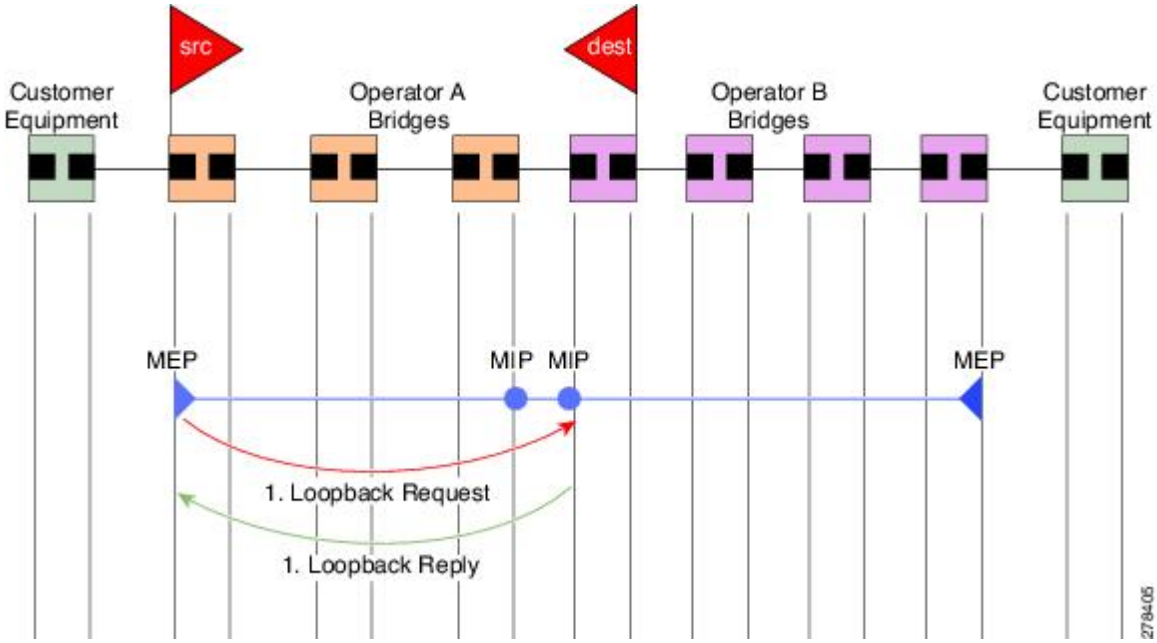

Loopback messages can be padded with user-specified data. This allows data corruption to be detected in the network. They also carry a sequence number which allows for out-of-order frames to be detected.

Except for one-way delay and jitter measurements, loopback messages can also be used for Ethernet SLA, if the peer does not support delay measurement.

**Note** The Ethernet CFM loopback function should not be confused with the remote loopback functionality in Ethernet Link OAM (see the Remote Loopback). CFM loopback is used to test connectivity with a remote MP, and only the CFM LBM packets are reflected back, but Ethernet Link OAM remote loopback is used to test a link by taking it out of normal service and putting it into a mode where it reflects back all packets.

## Linktrace (IEEE 802.1ag and ITU-T Y.1731)

Linktrace Messages (LTM) and Linktrace Replies (LTR) are used to track the path (hop-by-hop) to a unicast destination MAC address. At the request of the operator, a local MEP sends an LTM. Each hop where there is a maintenance point sends an LTR back to the originating MEP. This allows the administrator to discover connectivity data about the path. It is similar in concept to IP traceroute, although the mechanism is different. In IP traceroute, successive probes are sent, whereas CFM Linktrace uses a single LTM which is forwarded by each MP in the path. LTMs are multicast, and carry the unicast target MAC address as data within the frame. They are intercepted at each hop where there is a maintenance point, and either retransmitted or dropped to discover the unicast path to the target MAC address.

This figure shows an example of CFM linktrace message flow between MEPs and MIPs.

***Figure 6: Linktrace Message Flow***

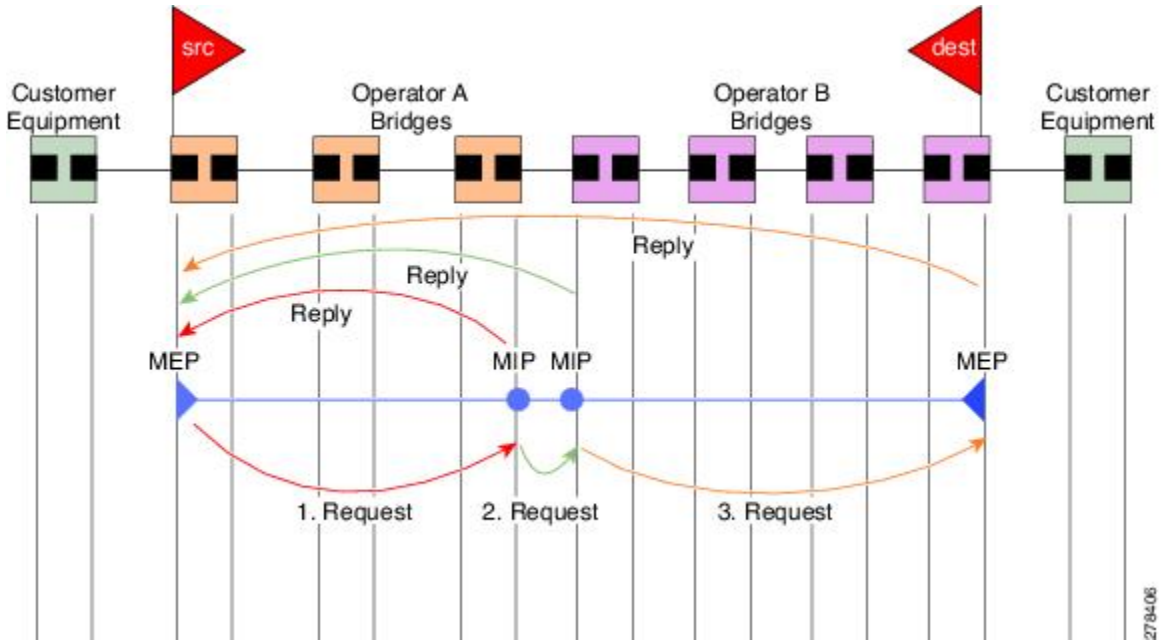


The linktrace mechanism is designed to provide useful information even after a network failure. This allows it to be used to locate failures, for example after a loss of continuity is detected. To achieve this, each MP maintains a CCM Learning Database. This maps the source MAC address for each received CCM to the

interface through which the CCM was received. It is similar to a typical bridge MAC learning database, except that it is based only on CCMs and it times out much more slowly—on the order of days rather than minutes.

**Note** In IEEE 802.1ag, the CCM Learning Database is referred to as the MIP CCM Database. However, it applies to both MIPs and MEPs.

In IEEE 802.1ag, when an MP receives an LTM message, it determines whether to send a reply using the following steps:

1. The target MAC address in the LTM is looked up in the bridge MAC learning table. If the MAC address is known, and therefore the egress interface is known, then an LTR is sent.
2. If the MAC address is not found in the bridge MAC learning table, then it is looked up in the CCM learning database. If it is found, then an LTR is sent.
3. If the MAC address is not found, then no LTR is sent (and the LTM is not forwarded).

If the target MAC has never been seen previously in the network, the linktrace operation will not produce any results.

**Note** IEEE 802.1ag and ITU-T Y.1731 define slightly different linktrace mechanisms. In particular, the use of the CCM learning database and the algorithm described above for responding to LTM messages are specific to IEEE 802.1ag. IEEE 802.1ag also specifies additional information that can be included in LTRs. Regardless of the differences, the two mechanisms are interoperable.

## Exploratory Linktrace (Cisco)

Exploratory Linktrace is a Cisco extension to the standard linktrace mechanism described above. It has two primary purposes:

- Provide a mechanism to locate faults in cases where standard linktrace does not work, such as when a MAC address has never been seen previously in the network. For example, if a new MEP has been provisioned but is not working, standard linktrace does not help isolate a problem because no frames will ever have been received from the new MEP. Exploratory Linktrace overcomes this problem.
- Provide a mechanism to map the complete active network topology from a single node. This can only be done currently by examining the topology (for example, the STP blocking state) on each node in the network individually, and manually combining this information to create the overall active topology map. Exploratory linktrace allows this to be done automatically from a single node.

Exploratory Linktrace is implemented using the Vendor Specific Message (VSM) and Vendor Specific Reply (VSR) frames defined in ITU-T Y.1731. These allow vendor-specific extensions to be implemented without degrading interoperability. Exploratory Linktrace can safely be deployed in a network that includes other CFM implementations because those implementations will simply ignore the Exploratory Linktrace messages.

Exploratory Linktrace is initiated at the request of the administrator, and results in the local MEP sending a multicast Exploratory Linktrace message. Each MP in the network that receives the message sends an Exploratory Linktrace reply. MIPs that receive the message also forward it on. The initiating MEP uses all the replies to create a tree of the overall network topology.

This figure show an example of the Exploratory Linktrace message flow between MEPs.

*Figure 7: Exploratory Linktrace Messages and Replies*

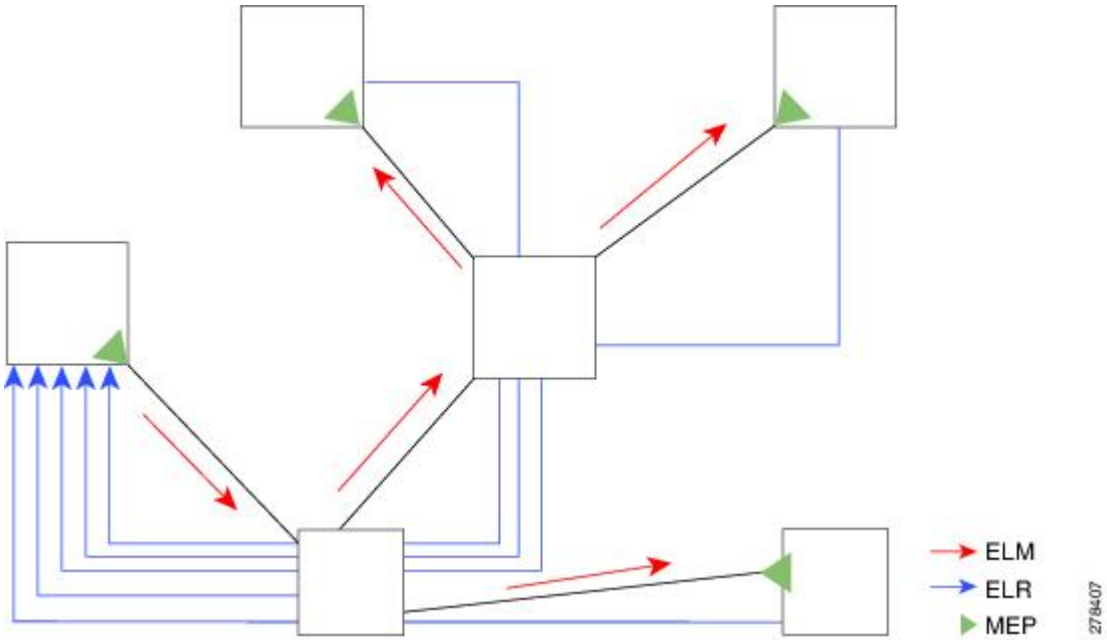


To avoid overloading the originating MEP with replies in a large network, responding MPs delay sending their replies for a random amount of time, and that time increases as the size of the network increases.

In a large network, there will be a corresponding large number of replies and the resulting topology map will be equally large. If only a part of the network is of interest, for example, because a problem has already been narrowed down to a small area, then the Exploratory Linktrace can be "directed" to start at a particular MP. Replies will thus only be received from MPs beyond that point in the network. The replies are still sent back to the originating MEP.

## Delay and Jitter Measurement (ITU-T Y.1731)

The router supports one-way and two-way delay measurement using two packet types:

- Delay Measurement Message (DMM)
- Delay Measurement Response (DMR)

These packets are unicast similar to loopback messages. The packets carry timestamps generated by the system time-of-day clock to support more accurate delay measurement, and also support an SLA manageability front-end. Beginning in Cisco IOS XR Release 4.1, the DDM & DDR packets carry timestamps derived from the DTI timing input on the clock-interface port on the RSP.

However, unlike loopback messages, these message types can also measure one-way delay and jitter either from destination to source, or from source to destination.

For more information about SLA, see the Ethernet SLA.

## Synthetic Loss Measurement (ITU-T Y.1731)

Synthetic Loss Measurement (SLM) is a mechanism that injects synthetic measurement probes, and measures the loss of these probes in order to measure the loss of real data traffic. Each probe packet carries a sequence number, and the sender increments the sequence number by one for each packet that is sent and the receiver can thereby detect the lost packets by looking for missing sequence numbers.

SLM packets contain two sequence numbers; one written by the initiator into the SLM and copied by the responder into the SLR, and the other allocated by the responder and written into the SLR. These are refered to as the source-to-destination (sd) sequence number and the destination-to-source (ds) sequence number respectively.

This figure shows an example of how the sequence numbers are used to calculate the Frame Loss Ratio (FLR) in each direction.

***Figure 8: Synthetic Loss Measurement***

## Loss Measurement (ITU-T Y.1731)

Y.1731 Loss Measurement is a mechanism that measures the actual data traffic loss between a pair of MEPs in a point-to-point Ethernet service. This is in contrast to the Synthetic Loss Measurement, which measures the frame loss of synthetic frames. By using Y.1731 Loss Measurement, you can measure the one-way loss in each direction, for each priority class and also measure the loss aggregated across all priority classes.

To enable loss measurements to be made, each MEP maintains, for each priority class, both source-to-destination and destination-to-source frame counts for its peer MEPs.

There are two Loss Measurement Mechanisms (LMM); namely, single-ended and dual-ended. Cisco IOS XR Software supports only single-ended LMM.

## MEP Cross-Check

MEP cross-check supports configuration of a set of expected peer MEPs so that errors can be detected when any of the known MEPs are missing, or if any additional peer MEPs are detected that are not in the expected group.

The set of expected MEP IDs in the service is user-defined. Optionally, the corresponding MAC addresses can also be specified. CFM monitors the set of peer MEPs from which CCMs are being received. If no CCMs are ever received from one of the specified expected peer MEPs, or if a loss of continuity is detected, then a cross-check “missing” defect is detected. Similarly, if CCMs are received from a matching MEP ID but with the wrong source MAC address, a cross-check “missing” defect is detected. If CCMs are subsequently received that match the expected MEP ID, and if specified, the expected MAC address, then the defect is cleared.

**Note** While loss of continuity can be detected for any peer MEP, it is only treated as a defect condition if cross-check is configured.

If cross-check is configured and CCMs are received from a peer MEP with a MEP ID that is not expected, this is detected as a cross-check “unexpected” condition. However, this is not treated as a defect condition.

## Configurable Logging

CFM supports logging of various conditions to syslog. Logging can be enabled independently for each service, and when the following conditions occur:

- New peer MEPs are detected, or loss of continuity with a peer MEP occurs.
- Changes to the CCM defect conditions are detected.
- Cross-check “missing” or “unexpected” conditions are detected.
- AIS condition detected (AIS messages received) or cleared (AIS messages no longer received).
- EFD used to shut down an interface, or bring it back up.

## EFD

Ethernet Fault Detection (EFD) is a mechanism that allows Ethernet OAM protocols, such as CFM, to control the “line protocol” state of an interface.

Unlike many other interface types, Ethernet interfaces do not have a line protocol, whose state is independent from that of the interface. For Ethernet interfaces, this role is handled by the physical-layer Ethernet protocol itself, and therefore if the interface is physically up, then it is available and traffic can flow.

EFD changes this to allow CFM to act as the line protocol for Ethernet interfaces. This allows CFM to control the interface state so that if a CFM defect (such as AIS or loss of continuity) is detected with an expected peer MEP, the interface can be shut down. This not only stops any traffic flowing, but also triggers actions in any higher-level protocols to route around the problem. For example, in the case of Layer 2 interfaces, the MAC table would be cleared and MSTP would reconverge. For Layer 3 interfaces, the ARP cache would be cleared and potentially the IGP would reconverge.

**Note** EFD can only be used for down MEPs. When EFD is used to shut down the interface, the CFM frames continue to flow. This allows CFM to detect when the problem has been resolved, and thus bring the interface backup automatically.

This figure shows CFM detection of an error on one of its sessions EFD signaling an error to the corresponding MAC layer for the interface. This triggers the MAC to go to a down state, which further triggers all higher level protocols (Layer 2 pseudowires, IP protocols, and so on) to go down and also trigger a reconvergence where possible. As soon as CFM detects there is no longer any error, it can signal to EFD and all protocols will once again go active.

*Figure 9: CFM Error Detection and EFD Trigger*

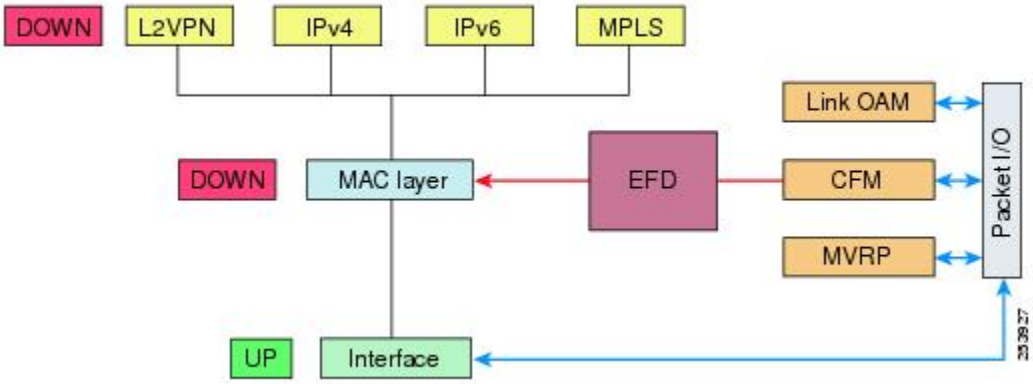


## Flexible VLAN Tagging for CFM

The Flexible VLAN Tagging for CFM feature ensures that CFM packets are sent with the right VLAN tags so that they are appropriately handled as a CFM packet by the remote device. When packets are received by an edge router, they are treated as either CFM packets or data packets, depending on the number of tags in the header. The system differentiates between CFM packets and data packets based on the number of tags in the packet, and forwards the packets to the appropriate paths based on the number of tags in the packet.

CFM frames are normally sent with the same VLAN tags as the corresponding customer data traffic on the interface, as defined by the configured encapsulation and tag rewrite operations. Likewise, received frames are treated as CFM frames if they have the correct number of tags as defined by the configured encapsulation and tag rewrite configuration, and are treated as data frames (that is, they are forwarded transparently) if they have more than this number of tags.

In most cases, this behavior is as desired, since the CFM frames are then treated in exactly the same way as the data traffic flowing through the same service. However, in a scenario where multiple customer VLANs are multiplexed over a single multipoint provider service (for example, N:1 bundling), a different behavior might be desirable.

This figure shows an example of a network with multiple VLANS using CFM.

*Figure 10: Service Provider Network With Multiple VLANs and CFM*

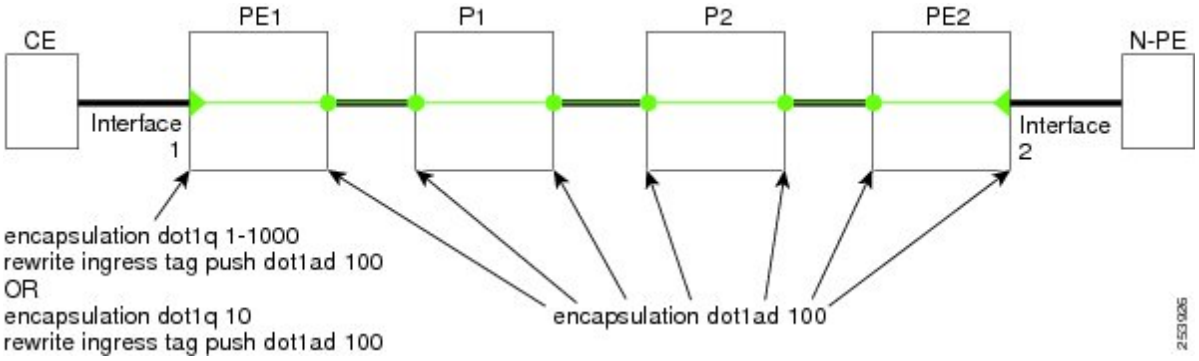

This figure shows a provider's access network, where the S-VLAN tag is used as the service delimiter. PE1 faces the customer, and PE2 is at the edge of the access network facing the core. N:1 bundling is used, so the interface encapsulation matches a range of C-VLAN tags. This could potentially be the full range, resulting in all:1 bundling. There is also a use case where only a single C-VLAN is matched, but the S-VLAN is nevertheless used as the service delimiter—this is more in keeping with the IEEE model, but limits the provider to 4094 services.

CFM is used in this network with a MEP at each end of the access network, and MIPs on the boxes within the network (if it is native Ethernet). In the normal case, CFM frames are sent by the up MEP on PE1 with two VLAN tags, matching the customer data traffic. This means that at the core interfaces and at the MEP on PE2, the CFM frames are forwarded as if they were customer data traffic, since these interfaces match only on the S-VLAN tag. So, the CFM frames sent by the MEP on PE1 are not seen by any of the other MPs.

Flexible VLAN tagging changes the encapsulation for CFM frames that are sent and received at Up MEPs. Flexible VLAN tagging allows the frames to be sent from the MEP on PE1 with just the S-VLAN tag that represents the provider service. If this is done, the core interfaces will treat the frames as CFM frames and they will be seen by the MIPs and by the MEP on PE2. Likewise, the MEP on PE1 should handle received frames with only one tag, as this is what it will receive from the MEP on PE2.

To ensure that CFM packets from Up MEPs are routed to the appropriate paths successfully, tags may be set to a specific number in a domain service, using the **tags** command. Currently, tags can only be set to one (1).

## CFM on MC-LAG

CFM on Multi-Chassis Link Aggregation Groups is supported on the Cisco ASR 9000 Series Router in the following typical network environment:

- The customer edge (CE) device is a dual-homed device that is connected to two provider edge (PE) point-of-attachment (POA) devices. However, the dual-homed device operates without awareness of connectivity to multiple PEs.
- The two points of attachment at the PE form a redundancy group (RG), with one POA functioning as the active POA, and the other as the standby POA for the dual-homed device link.
- As with typical failover scenarios, if a failure occurs with the active POA, the standby POA takes over to retain the dual-homed device’s connectivity to the network.

CFM on MC-LAG support can be qualified at two levels:

- CFM for the RG level—CFM context is per redundancy group and verifies connectivity for the entire RG.
- CFM for the POA level—CFM context is per point of attachment and verifies connectivity to a single POA.

Both levels of CFM support have certain restrictions and configuration guidelines that you must consider for successful implementation.

This section includes the following topics:

For more information about LAG and MC-LAG on the Cisco ASR 9000 Series Router, see the *Configuring Link Bundling* chapter in this guide.

## RG-Level CFM

RG-level CFM is comprised of three areas of monitoring:

### RG Downlink Monitoring

RG downlink monitoring uses CFM to verify connectivity between the dual-homed device and the RG.

To configure RG downlink monitoring, be sure that the following requirements are met:

- Down MEPs are configured on the bundle.
- Down MEPs on each POA are configured identically, using the same MEP ID and source MAC address.

This configuration has the following restrictions:

- The CCM loss time is greater than the failover time (typically 50 ms), due to the shortest CCM interval of 100 ms that is currently supported, which results in the shortest CCM loss time of 350 ms.

### RG Uplink Monitoring

RG uplink monitoring uses CFM to verify connectivity from the active POA to the core.

To configure RG uplink monitoring, be sure that the following requirements are met:

- Up MEPs are configured on the bundle interface or bundle subinterface on each POA.
- Up MEPs on each POA are configured identically, using the same MEP ID and source MAC address.

### End-to-End Service Monitoring

End-to-end service monitoring uses CFM to verify the end-to-end service between the dual-homed devices.

To configure end-to-end service monitoring, be sure that the following requirements are met:

- A down MEP is configured on the dual-homed device bundle interface or bundle subinterface.
- If optional MIPs are configured, then each POA is configured with a MIP on the bundle.
- Each POA can have a MIP on the uplink interface (if native Ethernet is used).
- The active and standby POA is configured identically.

This configuration has the following restrictions:

- The MIP on the standby POA will not respond to loopback or linktrace requests.

## POA-Level CFM

POA-level monitoing uses CFM to verify connectivity between the dual-homed device and a single POA.

To configure POA-level CFM, be sure that the following requirements are met:

- Down MEPs are configured on bundle members only.

This configuration has the following restrictions:

- POA-level monitoring is not supported on uplinks between a single POA and the core.

## Supported Features for CFM on MC-LAG

CFM on MC-LAG supports these CFM features:

- All existing IEEE 802.1ag and Y.1731 functionality on the Cisco ASR 9000 Series Router is supported on an MC-LAG RG.
- CFM maintenance points are supported on an MC-LAG interface. Maintenance points on a standby link are put into standby state.
- Maintenance points in standby state receive CFM messages, but do not send or reply to any CFM messages.
- When a MEP transitions from active to standby, all CCM defects and alarms are cleared.
- Standby MEPs record remote MEP errors and timeouts, but do not report faults. This means that remote MEPs and their errors will appear in **show** commands, but no logs, alarms, MIB traps, or EFD are triggered and AIS messages are not sent.
- When a MEP transitions from standby to active, any CCM defects previously detected while the MEP was in standby are reapplied and immediate actions are taken (logs, alarms, MIB traps, EFD, and so on).
- CFM on MC-LAG supports the same scale for bundle interfaces that is supported on the Cisco ASR 9000 Series Router.

## Restrictions for CFM on MC-LAG

To support CFM on MC-LAG, you must consider these restrictions and requirements:

- The CFM configuration must be the same on both the active and standby POAs.
- The CFM state is not synchronized between the two POAs. This can lead to flapping of the interface line protocol state on POA failover if EFD is configured. Fault alarms might also be delayed if a failover occurs just after a fault has been detected.
- POA-level CFM monitoring is not supported on a native Ethernet uplink interface.
- MEPs on bundle interfaces at level 0 are not supported.
- Loopback, linktrace, and Y.1731 SLA operations cannot be started from a MEP in standby state.
- Checks for configuration consistency of MEP IDs to ensure identical configuration of POAs is not supported.
- Y.1731 SLA statistics can be split between the two POAs if a failover occurs. An external network management system would need to collect and collate these statistics from the two POAs.

## CFM Software Acceleration

Cisco ASR 9000 Series Router provides bundle-offload configuration for CFM under global configuration mode. This configuration enables CFM software acceleration to support aggressive CCM intervals of 10ms and higher CFM scale on bundle interfaces. This feature is applicable only for cases when the bundle members are configured under the Cisco ASR 9000 Enhanced Ethernet Line Card or higher generation line cards.

CFM would not work if the bundle members are also present on the Cisco ASR 9000 Ethernet line Cards. The CFM software acceleration feature is turned off by default. The bundle-offload feature acts as a knob to switch the feature either ON or OFF.

# Ethernet SLA

Customers require their service providers to conform to a Service Level Agreement (SLA). Consequently, service providers must be able to monitor the performance characteristics of their networks. Similarly, customers also want to monitor the performance characteristics of their networks. Cisco provides Y.1731 performance monitoring using the Cisco Ethernet SLA feature.

An SLA defines a set of criteria that guarantees a minimum level of service for customers using a service provider network. The criteria can cover many different areas, including latency, jitter, frame loss, and availability.

The Cisco Ethernet SLA feature conforms to these standards:

- IEEE 802.1ag
- ITU-T Y.1731

The Cisco Ethernet SLA feature provides the architecture to monitor a network at Layer 2. This architecture provides functions such as collecting, storing, displaying, and analyzing SLA statistics. These SLA statistics can be stored and displayed in various ways, so that statistical analysis can be performed.

Ethernet SLA provides the framework for performing the following major functions of performance monitoring:

- Sending probes consisting of one or more packets to measure performance

  Ethernet SLA provides a flexible mechanism for sending SLA probes to measure performance. Probes can consist of either CFM loopback or CFM delay measurement packets. Options are available to modify how often the packets are sent, and to specify the attributes of the probe packets such as the size and priority.

- Scheduling of operations consisting of periodic probes.

  A flexible mechanism is provided by Ethernet SLA to specify how often each probe should be executed, how long it should last, and when the first probe should start. Probes can be scheduled to run back-to-back to provide continuous measurements, or at a defined interval ranging from once a minute to once a week.

- Collecting and storing results.

  Ethernet SLA provides flexibility to specify which performance parameters should be collected and stored for each measurement probe. Performance parameters include frame delay and jitter (inter-frame delay variation). For each performance parameter, either each individual result can be stored, or the results can be aggregated by storing a counter of the number of results that fall within a particular range. A configurable amount of historical data can also be stored as well as the latest results.

- Analyzing and displaying results.

  Ethernet SLA performs some basic statistical analysis on the collected results, such as calculating the minimum, maximum, mean and standard deviation. It also records whether any of the probe packets were lost or misordered, or if there is any reason why the results may not be a true reflection of the performance (for example if a big jump in the local time-of-day clock was detected during the time when the measurements were being made).

## Y.1731 Performance Monitoring

The ITU-T Y.1731 standard defines several mechanisms that can be used for performance monitoring in Carrier Ethernet networks. These are the measurement mechanisms that were defined in the standard:

**Delay Measurement**: This can be used to accurately measure frame delay by exchanging CFM frames containing timestamps, and to measure inter-frame delay variation (jitter) by comparing consecutive delay measurements. Delay Measurement messages can be used to perform these measurements:

- Round-trip time
- Round-trip Jitter
- One-way delay (both SD and DS)
- One-way jitter (both SD and DS)
- SLA Probe Packet corruption count
- Out of order SLA probe packet count
- SLA probe packet loss

**Loss Measurement**: Loss Measurement is an extension to the existing Ethernet SLA feature; it adds the functionality for loss measurement defined in the Y.1731 and G.8021 ITU-T standards. This is used to accurately measure the loss of data traffic, by exchanging CFM frames containing sent and received frame counters. It is also used to measure the availability of the network by tracking periods of high loss over time. Loss Measurement messages can be used to perform these measurements:

- Data packet loss
- SLA probe packet loss
- Out of order SLA Probe packet count
- SLA Probe Packet corruption count

**Synthetic Loss Measurement**: The loss measurement mechanism defined in Y.1731 can only be used in point-to-point networks, and only works when there is sufficient data traffic flowing. The difficulties with the Y.1731 Loss Measurement mechanism was recognized across the industry and hence an alternative mechanism has been defined and standardized for measuring loss.

This alternative mechanism does not measure the loss of the actual data traffic, but instead injects synthetic CFM frames and measures the loss of these synthetic frames. Statistical analysis can then be used to give an approximation to the loss of data traffic. This technique is called Synthetic Loss Measurement. This has been included in the latest version of the Y.1731 standard. Synthetic Loss Measurement messages can be used to perform these measurements:

- One-way loss (Source to Destination)
- One-way loss (Destination to Source)

**Loopback**: This is not primarily targetted at performance monitoring, but can be used to approximate round-trip delay and jitter, such as when the peer device does not support delay measurement. Loopback messages can be used to perform these measurements:

- Round-trip time
- Round-trip jitter
- SLA probe packet corruption count
- Out of order SLA probe packet count

- SLA probe packet loss

## Loss Measurement Terminology

These are the commonly used terminology in Loss Measurement Mechanism:

- **Single-ended**: A mechanism where device A sends a measurement packet to device B, which in turn sends a response back to device A. All calculations and results are done on device A.
- **Dual-ended**: A mechanism where device A sends a measurement packet to device B, which does not send a response. All calculations and results are done on device B.
- **One-way**: A measurement of the performance of packets flowing in one direction, from device A to device B, or from device B to device A.
- **Two-way**: A measurement of the performance of packets flowing from device A to device B, and back to device A.
- **Forwards**: A one-way measurement from the initiator (device A) to the receiver, or responder (device B).
- **Backwards**: A one-way measurement from the responder (device B) to the initiator (device A).

**Note** Cisco IOS XR Software supports only single-ended LMM.

## Loss Measurement Performance Attributes

These are two primary attributes that can be calculated based on loss measurements:

- Frame Loss Ratio (FLR)
- Availability

Frame Loss Ratio is the ratio of lost packets to sent packets:

*(<num_sent > - <num_rcvd> )/(<num_sent>)*

It is normally expressed as a percentage. The accuracy of the measurement depends majorly on the number of packets sent.

Availability is a complex attribute, typically measured over a long period of time, such as weeks or months. The intent of this performance attribute is to measure the proportion of time when there was prolonged high loss. Cisco IOS XR Software does not track the availability.

## Limitations of Data Loss Measurement

1. Data loss measurement cannot be used in a multipoint service; it can only be used in a peer-to-peer service.
2. As a Loss Measurement Reply (LMR) contains no sequence IDs, the only field, which can be used to distinguish to which probe a given LMR corresponds, is the priority level. Also, the priority level is the only field that can determine whether the LMR is in response to an on-demand or proactive operation. This limits the number of Loss Measurement probes that can be active at a time for each local MEP to 16.

3. As loss measurements are made on a per-priority class basis, QoS policies, which alter the priority of packets processed by the network element, or re-order packets can affect the accuracy of the calculations. For the highest accuracy, packets must be counted after any QoS policies have been applied.
4. The accuracy of data loss measurement is highly dependent on the number of data packets that are sent. If the volume of data traffic is low, errors with the packet counts might be magnified. If there is no data traffic flowing, no loss measurement performance attributes can be calculated. If aggregate measurements are taken, then only 2 probes can be active at the same time: one proactive and one on-demand.
5. The accuracy of data loss measurement is highly dependent on the accuracy of platform-specific packet counters. Due to hardware limitations, it may not be possible to achieve completely accurate packet counters, especially if QoS policies are applied to the packets being counted.
6. Performing data loss measurement can have an impact on the forwarding performance of network elements; this is because of the need to count, as well as forward the packets.
7. Before starting any LMM probes,it is necessary to allocate packet counters for use with LMM on both ends (assuming both ends are running Cisco IOS XR Software).

## Ethernet SLA Concepts

To successfully configure the Cisco Ethernet SLA feature, you should understand the following concepts:

## Loss Measurement Terminology

A *statistic* in Ethernet SLA is a single performance parameter. These statistics can be measured by Ethernet SLA:

- Round-trip delay
- Round-trip jitter
- One-way delay from source to destination
- One-way jitter from source to destination
- One-way frame loss from source to destination
- One-way delay from destination to source
- One-way jitter from destination to source
- One-way frame loss from destination to source

**Note** Not all statistics can be measured by all types of packet. For example, one-way statistics cannot be measured when using CFM loopback packets.

## Ethernet SLA Measurement Packet

An Ethernet SLA *measurement packet* is a single protocol message and corresponding reply that is sent on the network for the purpose of making SLA measurements. These types of measurement packet are supported:

- CFM Delay Measurement (Y.1731 DMM/DMR packets)—CFM delay measurement packets contain timestamps within the packet data that can be used for accurate measurement of frame delay and jitter.

These packets can be used to measure round-trip or one-way statistics; however, the size of the DMM/DMR packets cannot be modified.

**Note** From Cisco IOS XR Release 4.3.x onwards, you can configure the Ethernet SLA profile to use Y.1731 DMM v1 frames. The restriction of 150 configured Ethernet SLA operations for each CFM MEP is removed not only for profiles using DMM frames, but also for profiles using the other supported Y.1731 frame types, such as loopback measurement and synthetic loss measurement. For interoperability purposes, it is still possible to configure operations to use DMM v0 frames. This is done by specifying a type of **cfm-delay-measurement-v0** on the **ethernet SLA profile** command. The limit of 150 configured operations for each CFM MEP still applies in this case.

- CFM loopback (LBM/LBR)—CFM loopback packets are less accurate, but can be used if the peer device does not support DMM/DMR packets. Only round-trip statistics can be measured because these packets do not contain timestamps. However, loopback packets can be padded, so measurements can be made using frames of a specific size.
- CFM Synthetic Loss Measurement (Y.1731 SLM/SLR packets)—SLM packets contain two sequence numbers; one written by the initiator into the SLM and copied by the responder into the SLR, and the other allocated by the responder and written into the SLR. These are refered to as the source-to-destination (sd) sequence number and the destination-to-source (ds) sequence number respectively.

**Note** Because SLM is a statistical sampling technique, there may be some variance of the measured value around the actual loss value. Also, the accuracy of the measurement is improved by using more SLM packets for each FLR calculation.

- CFM Loss Measurement (Y.1731 LMM/LMR packets)— As LMMs and LMRs contain no sequence ID, there is a limited set of data that can be used to distinguish different Loss Measurement operations, limiting the number of concurrent operations for each MEP.

## Ethernet SLA Sample

A *sample* is a single result—a number—that relates to a given statistic. For some statistics such as round-trip delay, a sample can be measured using a single measurement packet. For other statistics such as jitter, obtaining a sample requires two measurement packets.

## Ethernet SLA Probe

A *probe* is a sequence of measurement packets used to gather SLA samples for a specific set of statistics. The measurement packets in a probe are of a specific type (for example, CFM delay measurement or CFM loopback) and have specific attributes, such as the frame size and priority.

**Note** A single probe can collect data for different statistics at the same time, using the same measurement packets (for example, one-way delay and round-trip jitter).

## Ethernet SLA Burst

Within a probe, measurement packets can either be sent individually, or in bursts. A *burst* contains two or more packets sent within a short interval apart. Each burst can last up to one minute, and bursts can follow each other immediately to provide continuous measurement within the probe.

For statistics that require two measurement packets for each sample (such as jitter), samples are only calculated based on measurement packets in the same burst. For all statistics, it is more efficient to use bursts than to send individual packets.

**Note** If bursts are configured back to back, so as to cause a continuous and uninterrupted flow of SLA packets, then packets at the end of one burst and the start of the next are used in Loss Measurement calculations.

## Ethernet SLA Schedule

An Ethernet SLA *schedule* describes how often probes are sent, how long each probe lasts, and at what time the first probe starts.

**Note** If probes are scheduled back to back, so as to cause a continuous and uninterrupted flow of SLA packets, then packets at the end of one probe and the start of the next are used in Loss Measurement calculations.

## Ethernet SLA Bucket

For a particular statistic, a *bucket* is a collection of results that were gathered during a particular period of time. All of the samples for measurements that were initiated during the period of time represented by a bucket are stored in that bucket. Buckets allow results from different periods of time to be compared (for example, peak traffic to off-peak traffic).

By default, a separate bucket is created for each probe; that is, the bucket represents the period of time starting at the same time as the probe started, and continuing for the duration of the probe. The bucket will therefore contain all the results relating to measurements made by that probe.

## Ethernet SLA Aggregation Bin

Rather than storing each sample separately within a bucket, an alternative is to aggregate the samples into bins. An *aggregation bin* is a range of sample values, and contains a counter of the number of samples that were received that fall within that range. The set of bins forms a histogram. When aggregation is enabled, each bucket contains a separate set of bins. See this figure.

## Ethernet SLA Operation Profile

An *operation profile* is a configuration entity that defines the following aspects of an operation:

- What packet types to send and in what quantities (probe and burst configuration)
- What statistics to measure, and how to aggregate them
- When to schedule the probes

An operation profile by itself does not cause any packets to be sent or statistics collected, but is used to create operation instances.

## Ethernet SLA Operation

An *operation* is an instance of a given operation profile that is actively collecting performance data. Operation instances are created by associating an operation profile with a given source (an interface and MEP) and with a given destination (a MEP ID or MAC address). Operation instances exist for as long as the configuration is applied, and they run for an indefinite duration on an ongoing basis.

## Ethernet SLA On-Demand Operation

An *on-demand operation* is a method of Ethernet SLA operation that can be run on an as-needed basis for a specific and finite period of time. This can be useful in situations such as when you are starting a new service or modifying the parameters for a service to verify the impact of the changes, or if you want to run a more detailed probe when a problem is detected by an ongoing scheduled operation.

On-demand operations do not use profiles and have a finite duration. The statistics that are collected are discarded after a finite time after the operation completes (two weeks), or when you manually clear them.

On-demand operations are not persistent so they are lost during certain events such as a card reload or Minimal Disruptive Restart (MDR).

## Statistics Measurement and Ethernet SLA Operations Overview

Ethernet SLA statistics measurement for network performance is performed by sending packets and storing data metrics such as:

- Round-trip delay time—The time for a packet to travel from source to destination and back to source again.
- Round-trip jitter—The variance in round-trip delay time (latency).
- One-way delay and jitter—The router also supports measurement of one-way delay or jitter from source to destination, or from destination to source.
- One-way frame loss—The router also supports measurement of one-way frame loss from source to destination, or from destination to source.

In addition to these metrics, these statistics are also kept for SLA probe packets:

- Packet loss count
- Packet corruption event
- Out-of-order event
- Frame Loss Ratio (FLR)

Counters for packet loss, corruption and out-of-order packets are kept for each bucket, and in each case, a percentage of the total number of samples for that bucket is reported (for example, 4% packet corruption). For delay, jitter, and loss statistics, the minimum, maximum, mean and standard deviation for the whole bucket are reported, as well as the individual samples or aggregated bins. Also, the overall FLR for the bucket, and individual FLR measurements or aggregated bins are reported for synthetic loss measurement statistics. The packet loss count is the overall number of measurement packets lost in either direction and the one-way FLR measures the loss in each direction separately.

When aggregation is enabled using the **aggregate** command, bins are created to store a count of the samples that fall within a certain value range, which is set by the **width** keyword. Only a counter of the number of results that fall within the range for each bin is stored. This uses less memory than storing individual results. When aggregation is not used, each sample is stored separately, which can provide a more accurate statistics analysis for the operation, but it is highly memory-intensive due to the independent storage of each sample.

A bucket represents a time period during which statistics are collected. All the results received during that time period are recorded in the corresponding bucket. If aggregation is enabled, each bucket has its own set of bins and counters, and only results relating to the measurements initiated during the time period represented by the bucket are included in those counters.

By default, there is a separate bucket for each probe. The time period is determined by how long the probe lasts (configured by the **probe**, **send (SLA)**, and **schedule (SLA)** commands).You can modify the size of buckets so that you can have more buckets per probe or fewer buckets per probe (less buckets allows the results from multiple probes to be included in the same bucket). Changing the size of the buckets for a given metric clears all stored data for that metric. All existing buckets are deleted and new buckets are created.

Scheduled SLA operation profiles run indefinitely, according to a configured schedule, and the statistics that are collected are stored in a rolling buffer, where data in the oldest bucket is discarded when a new bucket needs to be recorded.

Frame Loss Ratio (FLR) is a primary attribute that can be calculated based on loss measurements. FLR is defined by the ratio of lost packets to sent packets and expressed as a percentage value. FLR is measured in each direction (source to destination and destination to source) separately. Availability is an attribute, that is typically measured over a long period of time, such as weeks or months. The intent is to measure the proportion of time when there was prolonged high loss.

## Configuration Overview of Scheduled Ethernet SLA Operations

When you configure a scheduled Ethernet SLA operation, you perform these basic steps:

1. Configure global profiles to define how packets are sent in each probe, how the probes are scheduled, and how the results are stored.
2. Configure operations from a specific local MEP to a specific peer MEP using these profiles.

**Note** Certain Ethernet SLA configurations use large amounts of memory which can affect the performance of other features on the system. For more information, see the Configuring Ethernet SLA.

# Ethernet LMI

The Cisco ASR 9000 Series Router supports the Ethernet Local Management Interface (E-LMI) protocol as defined by the *Metro Ethernet Forum, Technical Specification MEF 16, Ethernet Local Management Interface (E-LMI), January 2006* standard.

E-LMI runs on the link between the customer-edge (CE) device and the provider-edge (PE) device, or User Network Interface (UNI), and provides a way for the CE device to auto-configure or monitor the services offered by the PE device (see this figure).

*Figure 11: E-LMI Communication on CE-to-PE Link*

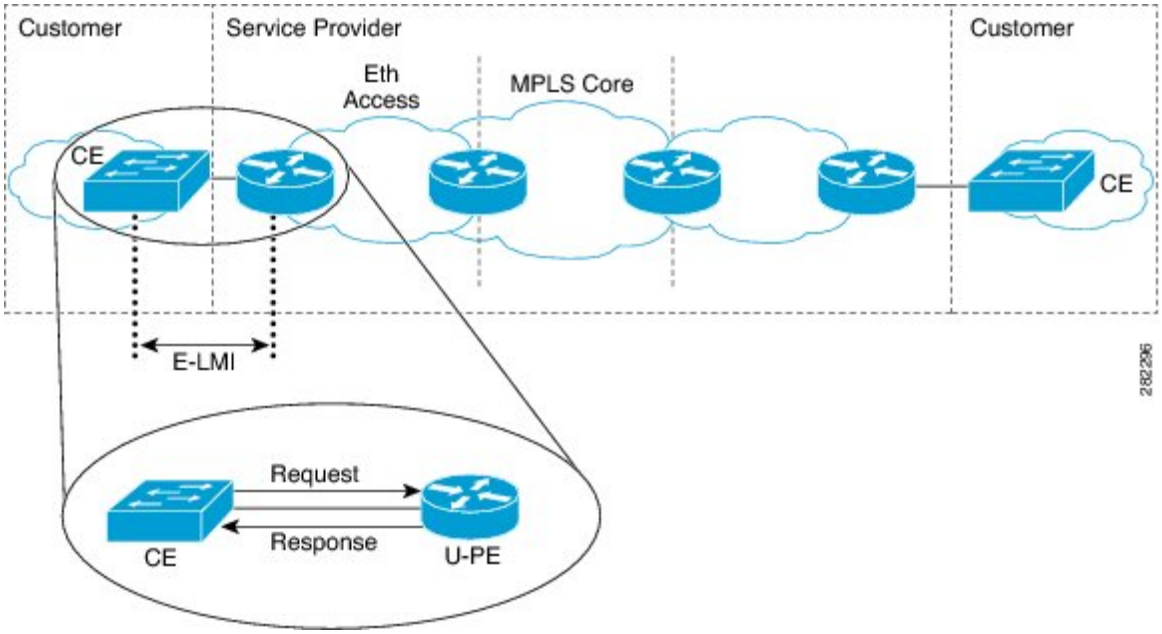


E-LMI is an asymmetric protocol whose basic operation involves the User-facing PE (uPE) device providing connectivity status and configuration parameters to the CE using STATUS messages in response to STATUS ENQUIRY messages sent by the CE to the uPE.

# E-LMI Messaging

The E-LMI protocol as defined by the MEF 16 standard, defines the use of only two message types—STATUS ENQUIRY and STATUS.

These E-LMI messages consist of required and optional fields called information elements, and all information elements are associated with assigned identifiers. All messages contain the Protocol Version, Message Type, and Report Type information elements, followed by optional information elements and sub-information elements.

E-LMI messages are encapsulated in 46- to 1500-byte Ethernet frames, which are based on the IEEE 802.3 untagged MAC-frame format. E-LMI frames consist of the following fields:

- Destination address (6 bytes)—Uses a standard MAC address of 01:80:C2:00:00:07.
- Source address (6 bytes)—MAC address of the sending device or port.
- E-LMI Ethertype (2 bytes)—Uses 88-EE.
- E-LMI PDU (46–1500 bytes)—Data plus 0x00 padding as needed to fulfill minimum 46-byte length.
- CRC (4 bytes)—Cyclic Redundancy Check for error detection.

For more details about E-LMI messages and their supported information elements, refer to the Metro Ethernet Forum, Technical Specification MEF 16, Ethernet Local Management Interface (E-LMI), January 2006.

## Cisco-Proprietary Remote UNI Details Information Element

The E-LMI MEF 16 specification does not define a way to send proprietary information.

To provide additional information within the E-LMI protocol, the Cisco IOS XR software implements a Cisco-proprietary information element called Remote UNI Details to send information to the CE about remote UNI names and states. This information element implements what is currently an unused identifier from the E-LMI MEF 16 specification.

To ensure compatibility for future implementations of E-LMI should this identifier ever be implemented in the standard protocol, or for another reason, you can disable transmission of the Remote UNI information element using the **extension remote-uni disable** command.

# E-LMI Operation

The basic operation of E-LMI consists of a CE device sending periodic STATUS ENQUIRY messages to the PE device, followed by mandatory STATUS message responses by the PE device that contain the requested information. Sequence numbers are used to correlate STATUS ENQUIRY and STATUS messages between the CE and PE.

The CE sends the following two forms of STATUS ENQUIRY messages called Report Types:

- E-LMI Check—Verifies a Data Instance (DI) number with the PE to confirm that the CE has the latest E-LMI information.
- Full Status—Requests information from the PE about the UNI and all EVCs.

The CE device uses a polling timer to track sending of STATUS ENQUIRY messages, while the PE device can optionally use a Polling Verification Timer (PVT), which specifies the allowable time between transmission of the PE's STATUS message and receipt of a STATUS ENQUIRY from the CE device before recording an error.

In addition to the periodic STATUS ENQUIRY/STATUS message sequence for the exchange of E-LMI information, the PE device also can send asynchronous STATUS messages to the CE device to communicate changes in EVC status as soon as they occur and without any prompt by the CE device to send that information.

Both the CE and PE devices use a status counter (N393) to determine the local operational status of E-LMI by tracking consecutive errors received before declaring a change in E-LMI protocol status.

# Supported E-LMI PE Functions on the Cisco ASR 9000 Series Router

The Cisco ASR 9000 Series Router serves as the PE device for E-LMI on a MEN, and supports the following PE functions:

- Supports the E-LMI protocol on Ethernet physical interfaces that are configured with Layer 2 subinterfaces as Ethernet Flow Points (EFPs), which serve as the EVCs about which the physical interface reports status to the CE. The Cisco IOS XR software does not support a specific manageability context for an Ethernet Virtual Connection (EVC).

**Note** For E-LMI on the Cisco ASR 9000 Series Router, the term EVC in this documentation refers to a Layer 2 subinterface/EFP.

- Provides the ability to configure the following E-LMI options defined in the MEF 16 specification:
  - T392 Polling Verification Timer (PVT)
  - N393 Status Counter
- Sends notification of the addition and deletion of an EVC.
- Sends notification of the availability (active) or unavailability (inactive, partially active) status of a configured EVC.
- Sends notification of the local UNI name.
- Sends notification of remote UNI names and states using the Cisco-proprietary Remote UNI Details information element, and the ability to disable the Cisco-proprietary Remote UNI information element.
- Sends information about UNI and EVC attributes to the CE (to allow the CE to auto-configure these attributes), including:
  - CE-VLAN to EVC Map
  - CE-VLAN Map Type (Bundling, All-to-one Bundling, Service Multiplexing)
  - Service Type (point-to-point or multipoint)
- Uses CFM Up MEPs to retrieve the EVC state, EVC Service Type, and remote UNI details.
- Provides the ability to retrieve the per-interface operational state of the protocol (including all the information currently being communicated by the protocol to the CE) using the command-line interface (CLI) or Extensible Markup Language (XML) interface.
- Supports up to 80 E-LMI sessions per linecard (one per physical interface).
- Supports up to 32000 EVCs total per linecard for all physical interfaces enabled for E-LMI.

# Unsupported E-LMI Functions

These areas of E-LMI are not supported on the Cisco ASR 9000 Series Router:

- CE functions

# Unidirectional Link Detection Protocol

Unidirectional Link Detection (UDLD) is a single-hop physical link protocol for monitoring an ethernet link, including both point-to-point and shared media links. This is a Cisco-proprietary protocol to detect link problems, which are not detected at the physical link layer. This protocol is specifically targeted at possible wiring errors, when using unbundled fiber links, where there can be a mismatch between the transmitting and receiving connections of a port.

## UDLD Operation

UDLD works by exchanging protocol packets between the neighboring devices. In order for UDLD to work, both devices on the link must support UDLD and have it enabled on respective ports.

UDLD sends an initial PROBE message on the ports where it is configured. Once UDLD receives a PROBE message, it sends periodic ECHO (hello) messages. Both messages identify the sender and its port, and also contain some information about the operating parameters of the protocol on that port. They also contain the device and port identifiers for any neighbor devices that the local device has heard from, on the port. Similarly, each device gets to know where it is connected and where its neighbors are connected.

This information can then be used to detect faults and miswiring conditions. The protocol operates an aging mechanism by means of which information from neighbors that is not periodically refreshed is eventually timed out. This mechanism can also be used for fault detection.

A FLUSH message is used to indicate that UDLD is disabled on a port, which causes the peers to remove the local device from their neighbor cache, to prevent it from being aged out.

If a problem is detected, UDLD disables the affected interface and also notifies the user. This is to avoid further network problems beyond traffic loss, such as loops which are not detected or prevented by STP.

## Types of Fault Detection

UDLD can detect these types of faults:

- Transmit faults — These are cases where there has been a failure in transmitting packets from the local port to the peer device, but packets continue to be received from the peer. These faults are caused by failure of the physical link (where notification at layer 1 of unidirectional link faults is not supported by the media) as well as packet path faults on the local or peer device.
- Miswiring faults — These are cases where the receiving and transmitting sides of a port on the local device are connected to different peer ports (on the same device or on different devices). This can occur when using unbundled fibers to connect fiber optic ports.
- Loopback faults — These are cases where the receiving and transmitting sides of a port are connected to each other, creating a loopback condition. This can be an intentional mode of operation, for certain types of testing, but UDLD must not be used in these cases.
- Receive faults — The protocol includes a heartbeat that is transmitted at a negotiated periodic interval to the peer device. Missed heartbeats can therefore be used to detect failures on the receiving side of the link (where they do not result in interface state changes). These could be caused by a unidirectional link with a failure only affecting the receiving side, or by a link which has developed a bidirectional fault. This detection depends on reliable, regular packet transmission by the peer device. For this reason, the UDLD protocol has two (configurable) modes of operation which determine the behavior on a heartbeat timeout. These modes are described in the section UDLD Modes of Operation.

## UDLD Modes of Operation

UDLD can operate in these modes:

- **Normal mode**: In this mode, if a Receive Fault is detected, the user is informed and no further action is taken.
- **Aggressive mode**: In this mode, if a Receive Fault is detected, the user is informed and the affected port is disabled.

## UDLD Aging Mechanism

This is a scenario that happens in a receive fault condition. Aging of UDLD information happens when the port that runs UDLD does not receive UDLD packets from the neighbor port for duration of hold time. The

hold time for the port is dictated by the remote port and depends on the message interval at the remote side. The shorter the message interval, the shorter is the hold time and the faster the detection. The hold time is three times the message interval in Cisco IOS XR Software.

UDLD information can age out due to the high error rate on the port caused by some physical issue or duplex mismatch. Such packet drop does not mean that the link is unidirectional and UDLD in normal mode does not disable such link.

It is important to choose the right message interval in order to ensure proper detection time. The message interval should be fast enough to detect the unidirectional link before the forwarding loop is created. The default message interval is 60 seconds. The detection time is equal to approximately three times the message interval. So, when using default UDLD timers, UDLD does not time out the link faster than the STP aging time.

## State Machines

UDLD uses two types of finite state machines (FSMs), generally referred as state machines. The Main FSM deals with all the phases of operation of the protocol while the Detection FSM handles only the phases that determine the status of a port.

## Main FSM

The Main FSM can be in one of these states:

- **Init**: Protocol is initializing.
- **UDLD inactive**: Port is down or UDLD is disabled.
- **Linkup**: Port is up and running, and UDLD is in the process of detecting a neighbor.
- **Detection**: A hello message from a new neighbor has been received and the Detection FSM is running to determine the status of the port.
- **Advertisement**: The Detection FSM has run and concluded that the port is operating correctly, periodic hellos will continue to be sent and hellos from neighbors monitored.
- **Port shutdown**: The Detection FSM detected a fault, or all neighbors were timed out in Aggressive mode, and the port has been disabled as a result.

## Detection FSM

The Detection FSM can be in one of these states:

- **Unknown**: Detection has not yet been performed or UDLD has been disabled.
- **Unidirectional detected**: A unidirectional link condition has been detected because a neighbor does not see the local device, the port will be disabled.
- **Tx/Rx loop**: A loopback condition has been detected by receiving a TLV with the ports own identifiers, the port will be disabled.
- **Neighbor mismatch**: A miswiring condition has been detected in which a neighbor can identify other devices than those the local device can see and the port will be disabled.
- **Bidirectional detected**: UDLD hello messages are exchanged successfully in both directions, the port is operating correctly.

# Ethernet Data Plane Loopback

The Ethernet Data Plane Loopback feature allows you to test services and throughput of an Ethernet port or a device using a test generator. You can verify the maximum rate of frame transmission with no frame loss. This feature allows bidirectional throughput measurement, and on-demand or out-of-service (intrusive) operation during service turn-ups. This feature can be used for testing during service turn-ups and troubleshooting of services after a turn-up.

If you need to test a service while it is live, you can do this without disrupting any of the live data traffic. To achieve this, you can use test traffic that differs from live data traffic. For example, the traffic from a test generator can contain the source MAC address of the test generator, or test traffic may be assigned a particular Class of Service (CoS). Irrespective of the method used, the device looping back the traffic must be able to filter out the test traffic and leave the data traffic untouched.

**Note** Configuring Ethernet Data Plane Loopback on a device does not indicate the start of an actual session.

## Features Supported for Ethernet Data Plane Loopback

The support that the Ethernet Data Plane Loopback feature provides is:

- Locally-enabled Ethernet Data Plane Loopback on all Ethernet interface types, such as physical and bundle interfaces and sub-interfaces.
- In the case of Layer 2 interfaces, support for these types of looping back of traffic:
  - External loopback – All traffic received on the ingress interface is blindly sent out of the egress interface.
  - Internal loopback – All traffic received on the egress interface is blindly injected into the ingress interface.
- In the case of Layer 3 interfaces, only external loopback is supported.
- When a Bundle interface is placed into loopback, traffic on all bundle link members are looped back.
- MAC address must always be swapped on looped-back traffic.
- Allows the application of multiple filters to loopback only a subset of traffic received by an interface and only drop the corresponding reverse-direction traffic.
- Provides an option to specify a time period after which the loopback is automatically terminated.
- Supports at least 100 simultaneous loopback sessions across the system.

## Limitations of Ethernet Data Plane Loopback

These are the limitations of Ethernet Data Plane Loopback (EDPL):

- Layer 3 interfaces including pseudowires are not supported in internal EDPL.
- The first generation Cisco ASR 9000 Ethernet Line Cards are not supported.
- The fifth generation Cisco ASR 9000 series high density ethernet line cards do not support internal EDPL

- Virtual interfaces such as BVI are not supported.
- Filtering based on LLC-OUI is not supported.
- A maximum of 50 simultaneous loopback sessions are supported for each Network Processor on the linecard.
- LAG bundles that are member of Satellite nV interface over bundle inter-chassis link (also known as LAG over LAG bundles) are not supported.

## Configuring Ethernet Data Plane Loopback

Perform these steps to configure Ethernet Data Plane Loopback.

**Note** Configuring or permitting Ethernet Data Plane Loopback is not the same as starting an actual loopback session.

### SUMMARY STEPS

1. **configure**
2. **interface** [**GigabitEthernet** | **TenGigE**] *interface-path-id*
3. **ethernet loopback permit {external | internal}**
4. **end**
5. or
6. **commit**

### DETAILED STEPS

**Step 1** **configure**

**Example:**

```
RP/0/RSP0/CPU0:router# configure
```

Enters global configuration mode.

**Step 2** **interface** [**GigabitEthernet** | **TenGigE**] *interface-path-id*

**Example:**

```
RP/0/RSP0/CPU0:router(config)# interface
TenGigE 0/1/0/0
```

Enters interface configuration mode and specifies the Ethernet interface name and notation *rack/slot/module/port*.

The example indicates an 8-port 10-Gigabit Ethernet interface in modular services card slot 1.

**Step 3** **ethernet loopback permit {external | internal}**

**Example:**

```
RP/0/RSP0/CPU0:router(config-if-srv)# ethernet loopback permit external
```

Configures ethernet loopback externally or internally on an interface. External loopback allows loopback of traffic from wire. Internal loopback allows loopback of traffic from the bridge domain.

**Step 4** **end**

**Step 5** or

**Step 6** **commit**

**Example:**

```
RP/0/RSP0/CPU0:router(config-if-srv)# commit
```

Saves configuration changes.

- When you issue the **end** command, the system prompts you to commit changes:

```
Uncommitted changes found, commit them before exiting(yes/no/cancel)?
[cancel]:
```

- Entering **yes** saves configuration changes to the running configuration file, exits the configuration session, and returns the router to EXEC mode.
- Entering **no** exits the configuration session and returns the router to EXEC mode without committing the configuration changes.
- Entering **cancel** leaves the router in the current configuration session without exiting or committing the configuration changes.
- Use the **commit** command to save the configuration changes to the running configuration file and remain within the configuration session.

## Ethernet Data Plane Loopback on Satellite nV System

The Ethernet Data Plane Loopback (EDPL) is implemented on the Satellite nV System as shown in this illustration.

*Figure 12: EDPL on Satellite nV System*

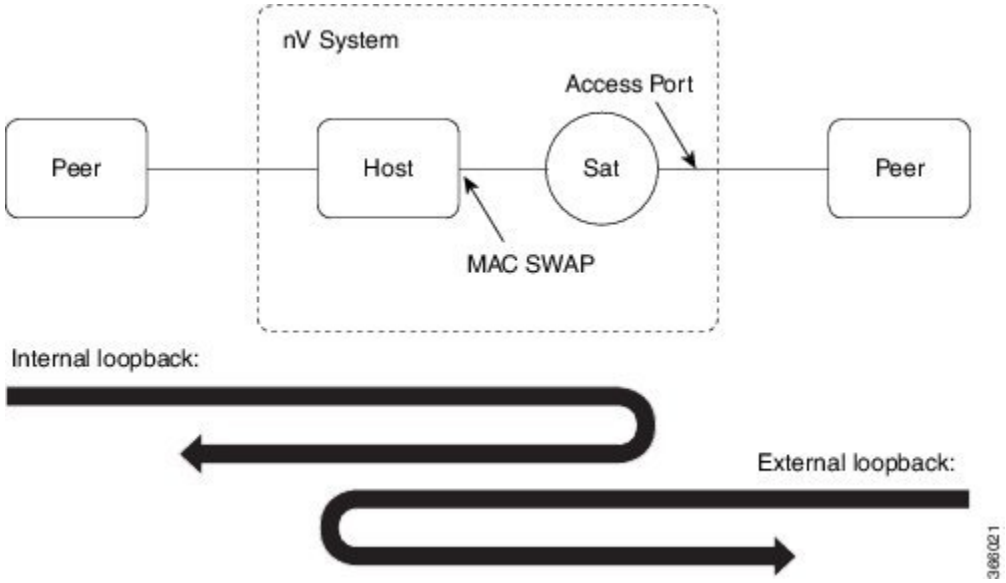


The internal and external EDPL are realized as follows:

- **Internal Loopback**: The MAC address swap happens on the host and the frame actually gets looped back from the satellite where Layer 1 loopback needs to be turned on at the port. As the entire port is looped back on the satellite, the internal loopback for satellite ports cannot loopback or filter specific sub-interface sessions on the port. You need to enable both EDPL and port L1 internal loopback on the satellite port for this functionality.
- **External Loopback**: The external loopback is currently implemented entirely on the host because of the need to perform MAC address swap.

# How to Configure Ethernet OAM

This section provides these configuration procedures:

## Configuring Ethernet Link OAM

Custom EOAM settings can be configured and shared on multiple interfaces by creating an EOAM profile in Ethernet configuration mode and then attaching the profile to individual interfaces. The profile configuration does not take effect until the profile is attached to an interface. After an EOAM profile is attached to an interface, individual EOAM features can be configured separately on the interface to override the profile settings when desired.

This section describes how to configure an EOAM profile and attach it to an interface in these procedures:

### Configuring an Ethernet OAM Profile

Perform these steps to configure an Ethernet OAM profile.

## SUMMARY STEPS

1. **configure**
2. **ethernet oam profile** *profile-name*
3. **link-monitor**
4. **symbol-period window** *window*
5. **symbol-period threshold low** *threshold* **high** *threshold*
6. **frame window** *window*
7. **frame threshold low** *threshold* **high** *threshold*
8. **frame-period window** *window*
9. **frame-period threshold low***threshold* **high** *threshold*
10. **frame-seconds window** *window*
11. **frame-seconds threshold low** *threshold* **high** *threshold*
12. **exit**
13. **mib-retrieval**
14. **connection timeout** <*timeout*>
15. **hello-interval** {**100ms**|**1s**}
16. **mode** {**active**|**passive**}
17. **require-remote mode** {**active**|**passive**}
18. **require-remote mib-retrieval**
19. **action capabilities-conflict** {**disable | efd | error-disable-interface**}
20. **action critical-event** {**disable** | **error-disable-interface**}
21. **action discovery-timeout** {**disable** | **efd** | **error-disable-interface**}
22. **action dying-gasp** {**disable** | **error-disable-interface**}
23. **action high-threshold** {**error-disable-interface** | **log**}
24. **action session-down** {**disable** | **efd** | **error-disable-interface**}
25. **action session-up disable**
26. **action uni-directional link-fault** {**disable** | **efd** | **error-disable-interface**}
27. **action wiring-conflict** {**disable | efd | log**}
28. **uni-directional link-fault detection**
29. **commit**
30. **end**

## DETAILED STEPS

| | Command or Action | Purpose |
|---|---|---|
| **Step 1** | **configure**<br>**Example:**<br>`RP/0/RSP0/CPU0:router# configure terminal` | Enters global configuration mode. |
| **Step 2** | **ethernet oam profile** *profile-name*<br>**Example:**<br>`RP/0/RSP0/CPU0:router(config)# ethernet oam profile Profile_1` | Creates a new Ethernet Operations, Administration and Maintenance (OAM) profile and enters Ethernet OAM configuration mode. |

| | Command or Action | Purpose |
|---|---|---|
| **Step 3** | **link-monitor**<br>**Example:**<br>`RP/0/RSP0/CPU0:router(config-eoam)# link-monitor` | Enters the Ethernet OAM link monitor configuration mode. |
| **Step 4** | **symbol-period window** *window*<br>**Example:**<br>`RP/0/RSP0/CPU0:router(config-eoam-lm)# symbol-period window 60000` | (Optional) Configures the window size (in milliseconds) for an Ethernet OAM symbol-period error event. The IEEE 802.3 standard defines the window size as a number of symbols rather than a time duration. These two formats can be converted either way by using a knowledge of the interface speed and encoding.<br>The range is 1000 to 60000.<br>The default value is 1000. |
| **Step 5** | **symbol-period threshold low** *threshold* **high** *threshold*<br>**Example:**<br>`RP/0/RSP0/CPU0:router(config-eoam-lm)# symbol-period threshold ppm low 1 high 1000000` | (Optional) Configures the thresholds (in symbols) that trigger an Ethernet OAM symbol-period error event. The high threshold is optional and is configurable only in conjunction with the low threshold.<br>The range is 0 to 60000000.<br>The default low threshold is 1. |
| **Step 6** | **frame window** *window*<br>**Example:**<br>`RP/0/RSP0/CPU0:router(config-eoam-lm)# frame window 6000` | (Optional) Configures the frame window size (in milliseconds) of an OAM frame error event.<br>The range is from 1000 to 60000.<br>The default value is 1000. |
| **Step 7** | **frame threshold low** *threshold* **high** *threshold*<br>**Example:**<br>`RP/0/RSP0/CPU0:router(config-eoam-lm)# frame threshold low 10000000 high 60000000` | (Optional) Configures the thresholds (in symbols) that triggers an Ethernet OAM frame error event. The high threshold is optional and is configurable only in conjunction with the low threshold.<br>The range is from 0 to 60000000.<br>The default low threshold is 1. |
| **Step 8** | **frame-period window** *window*<br>**Example:**<br>`RP/0/RSP0/CPU0:router(config-eoam-lm)# frame-period window 60000`<br>`RP/0/RSP0/CPU0:router(config-eoam-lm)# frame-period window milliseconds 60000` | (Optional) Configures the window size (in milliseconds) for an Ethernet OAM frame-period error event. The IEEE 802.3 standard defines the window size as number of frames rather than a time duration. These two formats can be converted either way by using a knowledge of the interface speed. Note that the conversion assumes that all frames are of the minimum size.<br>The range is from 1000 to 60000.<br>The default value is 1000. |

| | Command or Action | Purpose |
|---|---|---|
| | | **Note** The only accepted values are multiples of the line cardinterface module-specific polling interval, that is, 1000 milliseconds for most line cardsinterface modules. |
| **Step 9** | **frame-period threshold low***threshold* **high** *threshold*<br>**Example:**<br>`RP/0/RSP0/CPU0:router(config-eoam-lm)# frame-period threshold ppm low 100 high 1000000` | (Optional) Configures the thresholds (in errors per million frames ) that trigger an Ethernet OAM frame-period error event. The frame period window is defined in the IEEE specification as a number of received frames, in our implementation it is x milliseconds. The high threshold is optional and is configurable only in conjunction with the low threshold.<br>The range is from 1 to 1000000.<br>The default low threshold is 1.<br>To obtain the number of frames, the configured time interval is converted to a window size in frames using the interface speed. For example, for a 1Gbps interface, the IEEE defines minimum frame size as 512 bits. So, we get a maximum of approximately 1.5 million frames per second. If the window size is configured to be 8 seconds (8000ms) then this would give us a Window of 12 million frames in the specification's definition of Errored Frame Window.<br>The thresholds for frame-period are measured in errors per million frames. Hence, if you configure a window of 8000ms (that is a window of 12 million frames) and a high threshold of 100, then the threshold would be crossed if there are 1200 errored frames in that period (that is, 100 per million for 12 million). |
| **Step 10** | **frame-seconds window** *window*<br>**Example:**<br>`RP/0/RSP0/CPU0:router(config-eoam-lm)# frame-seconds window 900000` | (Optional) Configures the window size (in milliseconds) for the OAM frame-seconds error event.<br>The range is 10000 to 900000.<br>The default value is 60000.<br>**Note** The only accepted values are multiples of the line cardinterface module-specific polling interval, that is, 1000 milliseconds for most line cardsinterface modules. |
| **Step 11** | **frame-seconds threshold low** *threshold* **high** *threshold*<br>**Example:**<br>`RP/0/RSP0/CPU0:router(config-eoam-lm)# frame-seconds threshold low 3 high 900` | (Optional) Configures the thresholds (in seconds) that trigger a frame-seconds error event. The high threshold value can be configured only in conjunction with the low threshold value.<br>The range is 1 to 900<br>The default value is 1. |

| | Command or Action | Purpose |
|---|---|---|
| **Step 12** | **exit**<br>**Example:**<br>`RP/0/RSP0/CPU0:router(config-eoam-lm)# exit` | Exits back to Ethernet OAM mode. |
| **Step 13** | **mib-retrieval**<br>**Example:**<br>`RP/0/RSP0/CPU0:router(config-eoam)# mib-retrieval` | Enables MIB retrieval in an Ethernet OAM profile or on an Ethernet OAM interface. |
| **Step 14** | **connection timeout** *<timeout>*<br>**Example:**<br>`RP/0/RSP0/CPU0:router(config-eoam)# connection timeout 30` | Configures the connection timeout period for an Ethernet OAM session. as a multiple of the hello interval.<br>The range is 2 to 30.<br>The default value is 5. |
| **Step 15** | **hello-interval** {**100ms**\|**1s**}<br>**Example:**<br>`RP/0/RSP0/CPU0:router(config-eoam)# hello-interval 100ms` | Configures the time interval between hello packets for an Ethernet OAM session. The default is 1 second (**1s**). |
| **Step 16** | **mode** {**active**\|**passive**}<br>**Example:**<br>`RP/0/RSP0/CPU0:router(config-eoam)# mode passive` | Configures the Ethernet OAM mode. The default is active. |
| **Step 17** | **require-remote mode** {**active**\|**passive**}<br>**Example:**<br>`RP/0/RSP0/CPU0:router(config-eoam)# require-remote mode active` | Requires that active mode or passive mode is configured on the remote end before the OAM session becomes active. |
| **Step 18** | **require-remote mib-retrieval**<br>**Example:**<br>`RP/0/RSP0/CPU0:router(config-eoam)# require-remote mib-retrieval` | Requires that MIB-retrieval is configured on the remote end before the OAM session becomes active. |
| **Step 19** | **action capabilities-conflict** {**disable \| efd \| error-disable-interface**}<br>**Example:**<br>`RP/0/RSP0/CPU0:router(config-eoam)# action capabilities-conflict efd` | Specifies the action that is taken on an interface when a capabilities-conflict event occurs. The default action is to create a syslog entry.<br>**Note** • If you change the default, the **log** keyword option is available in Interface Ethernet OAM configuration mode to override the profile setting and log the event for the interface when it occurs. |

| | Command or Action | Purpose |
|---|---|---|
| **Step 20** | **action critical-event** {**disable** \| **error-disable-interface**}<br>**Example:**<br>`RP/0/RSP0/CPU0:router(config-eoam)# action critical-event error-disable-interface` | Specifies the action that is taken on an interface when a critical-event notification is received from the remote Ethernet OAM peer. The default action is to create a syslog entry.<br>**Note** • If you change the default, the **log** keyword option is available in Interface Ethernet OAM configuration mode to override the profile setting and log the event for the interface when it occurs. |
| **Step 21** | **action discovery-timeout** {**disable** \| **efd** \| **error-disable-interface**}<br>**Example:**<br>`RP/0/RSP0/CPU0:router(config-eoam)# action discovery-timeout efd` | Specifies the action that is taken on an interface when a connection timeout occurs. The default action is to create a syslog entry.<br>**Note** • If you change the default, the **log** keyword option is available in Interface Ethernet OAM configuration mode to override the profile setting and log the event for the interface when it occurs. |
| **Step 22** | **action dying-gasp** {**disable** \| **error-disable-interface**}<br>**Example:**<br>`RP/0/RSP0/CPU0:router(config-eoam)# action dying-gasp error-disable-interface` | Specifies the action that is taken on an interface when a dying-gasp notification is received from the remote Ethernet OAM peer. The default action is to create a syslog entry.<br>**Note** • If you change the default, the **log** keyword option is available in Interface Ethernet OAM configuration mode to override the profile setting and log the event for the interface when it occurs. |
| **Step 23** | **action high-threshold** {**error-disable-interface** \| **log**}<br>**Example:**<br>`RP/0/RSP0/CPU0:router(config-eoam)# action high-threshold error-disable-interface` | Specifies the action that is taken on an interface when a high threshold is exceeded. The default is to take no action when a high threshold is exceeded.<br>**Note** • If you change the default, the **disable** keyword option is available in Interface Ethernet OAM configuration mode to override the profile setting and take no action at the interface when the event occurs. |
| **Step 24** | **action session-down** {**disable** \| **efd** \| **error-disable-interface**}<br>**Example:** | Specifies the action that is taken on an interface when an Ethernet OAM session goes down. |

| | Command or Action | Purpose |
|---|---|---|
| | `RP/0/RSP0/CPU0:router(config-eoam)# action session-down efd` | **Note** • If you change the default, the **log** keyword option is available in Interface Ethernet OAM configuration mode to override the profile setting and log the event for the interface when it occurs. |
| **Step 25** | **action session-up disable**<br>**Example:**<br>`RP/0/RSP0/CPU0:router(config-eoam)# action session-up disable` | Specifies that no action is taken on an interface when an Ethernet OAM session is established. The default action is to create a syslog entry.<br>**Note** • If you change the default, the **log** keyword option is available in Interface Ethernet OAM configuration mode to override the profile setting and log the event for the interface when it occurs. |
| **Step 26** | **action uni-directional link-fault** {**disable** \| **efd** \| **error-disable-interface**} | Specifies the action that is taken on an interface when a link-fault notification is received from the remote Ethernet OAM peer. The default action is to create a syslog entry.<br>**Note** • If you change the default, the **log** keyword option is available in Interface Ethernet OAM configuration mode to override the profile setting and log the event for the interface when it occurs. |
| **Step 27** | **action wiring-conflict** {**disable** \| **efd** \| **log**}<br>**Example:**<br>`RP/0/RSP0/CPU0:router(config-eoam)# action session-down efd` | Specifies the action that is taken on an interface when a wiring-conflict event occurs. The default is to put the interface into error-disable state.<br>**Note** • If you change the default, the **error-disable-interface** keyword option is available in Interface Ethernet OAM configuration mode to override the profile setting and put the interface into error-disable state when the event occurs. |
| **Step 28** | **uni-directional link-fault detection**<br>**Example:**<br>`RP/0/RSP0/CPU0:router(config-eoam)# uni-directional link-fault detection` | Enables detection of a local, unidirectional link fault and sends notification of that fault to an Ethernet OAM peer. |
| **Step 29** | **commit**<br>**Example:**<br>`RP/0/RSP0/CPU0:router(config-if)# commit` | Saves the configuration changes to the running configuration file and remains within the configuration session. |

| | Command or Action | Purpose |
|---|---|---|
| **Step 30** | **end**<br>**Example:**<br>`RP/0/RSP0/CPU0:router(config-if)# end` | Ends the configuration session and exits to the EXEC mode. |

## Attaching an Ethernet OAM Profile to an Interface

Perform these steps to attach an Ethernet OAM profile to an interface:

### SUMMARY STEPS

1. **configure**
2. **interface** [**FastEthernet** | **HundredGigE**| **TenGigE**] *interface-path-id*
3. **ethernet oam**
4. **profile** *profile-name*
5. **commit**
6. **end**

### DETAILED STEPS

| | Command or Action | Purpose |
|---|---|---|
| **Step 1** | **configure**<br>**Example:**<br>`RP/0/RSP0/CPU0:router# configure terminal` | Enters global configuration mode. |
| **Step 2** | **interface** [**FastEthernet** \| **HundredGigE**\| **TenGigE**] *interface-path-id*<br>**Example:**<br>`RP/0/RSP0/CPU0:router(config)# interface TenGigE 0/1/0/0` | Enters interface configuration mode and specifies the Ethernet interface name and notation *rack/slot/module/port*.<br>**Note** • The example indicates an 8-port 10-Gigabit Ethernet interface in modular services card slot 1. |
| **Step 3** | **ethernet oam**<br>**Example:**<br>`RP/0/RSP0/CPU0:router(config-if)# ethernet oam` | Enables Ethernet OAM and enters interface Ethernet OAM configuration mode. |
| **Step 4** | **profile** *profile-name*<br>**Example:**<br>`RP/0/RSP0/CPU0:router(config-if-eoam)# profile Profile_1` | Attaches the specified Ethernet OAM profile (*profile-name*), and all of its configuration, to the interface. |
| **Step 5** | **commit**<br>**Example:** | Saves the configuration changes to the running configuration file and remains within the configuration session. |

| | Command or Action | Purpose |
|---|---|---|
| | `RP/0/RSP0/CPU0:router(config-if)# commit` | |
| **Step 6** | **end**<br>**Example:**<br>`RP/0/RSP0/CPU0:router(config-if)# end` | Ends the configuration session and exits to the EXEC mode. |

## Configuring Ethernet OAM at an Interface and Overriding the Profile Configuration

Using an EOAM profile is an efficient way of configuring multiple interfaces with a common EOAM configuration. However, if you want to use a profile but also change the behavior of certain functions for a particular interface, then you can override the profile configuration. To override certain profile settings that are applied to an interface, you can configure that command in interface Ethernet OAM configuration mode to change the behavior for that interface.

In some cases, only certain keyword options are available in interface Ethernet OAM configuration due to the default settings for the command. For example, without any configuration of the **action** commands, several forms of the command have a default behavior of creating a syslog entry when a profile is created and applied to an interface. Therefore, the **log** keyword is not available in Ethernet OAM configuration for these commands in the profile because it is the default behavior. However, the **log** keyword is available in Interface Ethernet OAM configuration if the default is changed in the profile configuration so you can retain the action of creating a syslog entry for a particular interface.

To see all of the default Ethernet OAM configuration settings, see the *Verifying the Ethernet OAM Configuration* section.

To configure Ethernet OAM settings at an interface and override the profile configuration, perform these steps:

### SUMMARY STEPS

1. **configure**
2. **interface** [GigabitEthernet | TenGigE] *interface-path-id*
3. **ethernet oam**
4. *interface-Ethernet-OAM-command* RP/0/RSP0/CPU0:router(config-if-eoam)# action capabilities-conflict error-disable-interface
5. **commit**
6. **end**

### DETAILED STEPS

| | Command or Action | Purpose |
|---|---|---|
| **Step 1** | **configure**<br>**Example:**<br>`RP/0/RSP0/CPU0:router# configure terminal` | Enters global configuration mode. |

| | Command or Action | Purpose |
|---|---|---|
| **Step 2** | **interface** [GigabitEthernet \| TenGigE] *interface-path-id*<br>**Example:**<br>`RP/0/RSP0/CPU0:router(config)# interface TenGigE 0/1/0/0` | Enters interface configuration mode and specifies the Ethernet interface name and notation *rack/slot/module/port*.<br>**Note** • The example indicates an 8-port 10-Gigabit Ethernet interface in modular services card slot 1. |
| **Step 3** | **ethernet oam**<br>**Example:**<br>`RP/0/RSP0/CPU0:router(config-if)# ethernet oam` | Enables Ethernet OAM and enters interface Ethernet OAM configuration mode. |
| **Step 4** | *interface-Ethernet-OAM-command*<br>RP/0/RSP0/CPU0:router(config-if-eoam)# action capabilities-conflict error-disable-interface | Configures a setting for an Ethernet OAM configuration command and overrides the setting for the profile configuration, where *interface-Ethernet-OAM-command* is one of the supported commands on the platform in interface Ethernet OAM configuration mode. |
| **Step 5** | **commit**<br>**Example:**<br>`RP/0/RSP0/CPU0:router(config-if)# commit` | Saves the configuration changes to the running configuration file and remains within the configuration session. |
| **Step 6** | **end**<br>**Example:**<br>`RP/0/RSP0/CPU0:router(config-if)# end` | Ends the configuration session and exits to the EXEC mode. |

## Verifying the Ethernet OAM Configuration

Use the **show ethernet oam configuration** command to display the values for the Ethernet OAM configuration for a particular interface, or for all interfaces. The following example shows the default values for Ethernet OAM settings:

- 
```
RP/0/RSP0/CPU0:router# show ethernet oam configuration
Thu Aug  5 22:07:06.870 DST
GigabitEthernet0/4/0/0:
  Hello interval:                                          1s
  Link monitoring enabled:                                  Y
  Remote loopback enabled:                                  N
  Mib retrieval enabled:                                    N
  Uni-directional link-fault detection enabled:             N
  Configured mode:                                     Active
  Connection timeout:                                       5
  Symbol period window:                                     0
  Symbol period low threshold:                              1
  Symbol period high threshold:                          None
  Frame window:                                          1000
  Frame low threshold:                                      1
  Frame high threshold:                                  None
  Frame period window:                                   1000
```

```
Frame period low threshold:                                  1
Frame period high threshold:                              None
Frame seconds window:                                    60000
Frame seconds low threshold:                                 1
Frame seconds high threshold:                             None
High threshold action:                                    None
Link fault action:                                         Log
Dying gasp action:                                         Log
Critical event action:                                     Log
Discovery timeout action:                                  Log
Capabilities conflict action:                              Log
Wiring conflict action:                          Error-Disable
Session up action:                                         Log
Session down action:                                       Log
Remote loopback action:                                    Log
Require remote mode:                                     Ignore
Require remote MIB retrieval:                                 N
Require remote loopback support:                              N
Require remote link monitoring:                               N
```

# Configuring Ethernet CFM

To configure Ethernet CFM, perform the following tasks:

## Configuring a CFM Maintenance Domain

To configure a CFM maintenance domain, perform the following steps:

### SUMMARY STEPS

1. **configure**
2. **ethernet cfm**
3. **domain** *domain-name* **level** *level-value* [**id** [**null**] [**dns** *DNS-name*] [**mac** *H.H.H*] [**string** *string*] ]
4. **traceroute cache hold-time** *minutes* **size** *entries*
5. **end** or **commit**

### DETAILED STEPS

| | Command or Action | Purpose |
|---|---|---|
| **Step 1** | **configure**<br>**Example:**<br>`RP/0/RSP0/CPU0:router# configure` | Enters global configuration mode. |
| **Step 2** | **ethernet cfm**<br>**Example:**<br>`RP/0/RSP0/CPU0:router(config)# ethernet cfm` | Enters Ethernet Connectivity Fault Management (CFM) configuration mode. |
| **Step 3** | **domain** *domain-name* **level** *level-value* [**id** [**null**] [**dns** *DNS-name*] [**mac** *H.H.H*] [**string** *string*] ]<br>**Example:** | Creates and names a container for all domain configurations and enters CFM domain configuration mode.<br>The level must be specified. |

| | Command or Action | Purpose |
|---|---|---|
| | `RP/0/RSP0/CPU0:router(config-cfm)# domain Domain_One level 1 id string D1` | The **id** is the maintenance domain identifier (MDID) and is used as the first part of the maintenance association identifier (MAID) in CFM frames. If the MDID is not specified, the domain name is used as the MDID by default. |
| **Step 4** | **traceroute cache hold-time** *minutes* **size** *entries*<br>**Example:**<br>`RP/0/RSP0/CPU0:router(config-cfm)# traceroute cache hold-time 1 size 3000` | (Optional) Sets the maximum limit of traceroute cache entries or the maximum time limit to hold the traceroute cache entries. The default is 100 minutes and 100 entries. |
| **Step 5** | **end** or **commit**<br>**Example:**<br>`RP/0/RSP0/CPU0:router(config-cfm-dmn)# commit` | Saves configuration changes.<br>• When you use the **end** command, the system prompts you to commit changes:<br>`Uncommitted changes found, commit them before exiting(yes/no/cancel)? [cancel]:`<br>• Entering **yes** saves configuration changes to the running configuration file, exits the configuration session, and returns the router to EXEC mode.<br>• Entering **no** exits the configuration session and returns the router to EXEC mode without committing the configuration changes.<br>• Entering **cancel** leaves the router in the current configuration session without exiting or committing the configuration changes.<br>• Use the **commit** command to save the configuration changes to the running configuration file and remain within the configuration session. |

## Configuring Services for a CFM Maintenance Domain

You can configure up to 32000 CFM services for a maintenance domain.

### Before you begin

To configure services for a CFM maintenance domain, perform the following steps:

### SUMMARY STEPS

1. **configure**
2. **ethernet cfm**
3. **domain** *domain-name* **level** *level-value* [**id** [**null**] [**dns** *DNS-name*] [**mac** *H.H.H*] [**string** *string*] ]

4. **service** *service-name* {**bridge group** *bridge-domain-group* **bridge-domain** *bridge-domain-name* | **down-meps | xconnect group** *xconnect-group-name* **p2p** *xconnect-name*}[**id** [**icc-based** *icc-string umc-string*] | [**string** *text*] | [**number** *number*] | [**vlan-id** *id-number*] | [**vpn-id** *oui-vpnid*]]
5. **end** or **commit**

## DETAILED STEPS

| | Command or Action | Purpose |
|---|---|---|
| **Step 1** | **configure**<br>**Example:**<br>`RP/0/RSP0/CPU0:router# configure` | Enters global configuration mode. |
| **Step 2** | **ethernet cfm**<br>**Example:**<br>`RP/0/RSP0/CPU0:router(config)# ethernet cfm` | Enters Ethernet CFM configuration mode. |
| **Step 3** | **domain** *domain-name* **level** *level-value* [**id** [**null**] [**dns** *DNS-name*] [**mac** *H.H.H*] [**string** *string*] ]<br>**Example:**<br>`RP/0/RSP0/CPU0:router(config-cfm)# domain Domain_One level 1 id string D1` | Creates and names a container for all domain configurations at a specified maintenance level, and enters CFM domain configuration mode.<br>The **id** is the maintenance domain identifier (MDID) and is used as the first part of the maintenance association identifier (MAID) in CFM frames. If the MDID is not specified, the domain name is used as the MDID by default. |
| **Step 4** | **service** *service-name* {**bridge group** *bridge-domain-group* **bridge-domain** *bridge-domain-name* \| **down-meps \| xconnect group** *xconnect-group-name* **p2p** *xconnect-name*}[**id** [**icc-based** *icc-string umc-string*] \| [**string** *text*] \| [**number** *number*] \| [**vlan-id** *id-number*] \| [**vpn-id** *oui-vpnid*]]<br>**Example:**<br>`RP/0/RSP0/CPU0:router(config-cfm-dmn)# service Bridge_Service bridge group BD1 bridge-domain B1` | Configures and associates a service with the domain and enters CFM domain service configuration mode. You can specify that the service is used only for down MEPs, or associate the service with a bridge domain or xconnect where MIPs and up MEPs will be created.<br>The **id** sets the short MA name. |
| **Step 5** | **end** or **commit**<br>**Example:**<br>`RP/0/RSP0/CPU0:router(config-cfm-dmn-svc)# commit` | Saves configuration changes.<br>• When you use the **end** command, the system prompts you to commit changes:<br>`Uncommitted changes found, commit them before exiting(yes/no/cancel)? [cancel]:`<br>• Entering **yes** saves configuration changes to the running configuration file, exits the configuration session, and returns the router to EXEC mode. |

| | Command or Action | Purpose |
|---|---|---|
| | | • Entering **no** exits the configuration session and returns the router to EXEC mode without committing the configuration changes.<br>• Entering **cancel** leaves the router in the current configuration session without exiting or committing the configuration changes.<br>• Use the **commit** command to save the configuration changes to the running configuration file and remain within the configuration session. |

## Enabling and Configuring Continuity Check for a CFM Service

The Cisco ASR 9000 Series Router supports Continuity Check as defined in the IEEE 802.1ag specification, and supports CCMs intervals of 100 ms and longer. The overall packet rates for CCM messages are up to 16000 CCMs-per-second sent, and up to 16000 CCMs-per-second received, per card.

**Note** If Ethernet SLA is configured, the overall combined packet rate for CCMs and SLA frames is 16000 frames-per-second in each direction, per card.

To configure Continuity Check for a CFM service, complete the following steps:

### SUMMARY STEPS

1. **configure**
2. **ethernet cfm**
3. **domain** *domain-name* **level** *level-value* [**id** [**null**] [**dns** *DNS-name*] [**mac** *H.H.H*] [**string** *string*] ]
4. **service** *service-name* {**bridge group** *bridge-domain-group* **bridge-domain** *bridge-domain-name* | **down-meps | xconnect group** *xconnect-group-name* **p2p** *xconnect-name*}[**id** [**icc-based** *icc-string umc-string*] | [**string** *text*] | [**number** *number*] | [**vlan-id** *id-number*] | [**vpn-id** *oui-vpnid*]]
5. **continuity-check interval** *time* [**loss-threshold** *threshold*]
6. **continuity-check archive hold-time** *minutes*
7. **continuity-check loss auto-traceroute**
8. **end** or **commit**

### DETAILED STEPS

| | Command or Action | Purpose |
|---|---|---|
| **Step 1** | **configure**<br>**Example:**<br>`RP/0/RSP0/CPU0:router# configure` | Enters global configuration mode. |
| **Step 2** | **ethernet cfm**<br>**Example:** | Enters Ethernet Connectivity Fault Management (CFM) configuration mode. |

| | Command or Action | Purpose |
|---|---|---|
| | `RP/0/RSP0/CPU0:router(config)# ethernet cfm` | |
| **Step 3** | **domain** *domain-name* **level** *level-value* [**id** [**null**] [**dns** *DNS-name*] [**mac** *H.H.H*] [**string** *string*] ]<br>**Example:**<br>`RP/0/RSP0/CPU0:router(config-cfm)# domain Domain_One level 1 id string D1` | Creates and names a container for all domain configurations and enters the CFM domain configuration mode.<br>The level must be specified.<br>The **id** is the maintenance domain identifier (MDID) and is used as the first part of the maintenance association identifier (MAID) in CFM frames. If the MDID is not specified, the domain name is used as the MDID by default. |
| **Step 4** | **service** *service-name* {**bridge group** *bridge-domain-group* **bridge-domain** *bridge-domain-name* \| **down-meps \|** **xconnect group** *xconnect-group-name* **p2p** *xconnect-name*}[**id** [**icc-based** *icc-string umc-string*] \| [**string** *text*] \| [**number** *number*] \| [**vlan-id** *id-number*] \| [**vpn-id** *oui-vpnid*]]<br>**Example:**<br>`RP/0/RSP0/CPU0:router(config-cfm-dmn)# service Bridge_Service bridge group BD1 bridge-domain B1` | Configures and associates a service with the domain and enters CFM domain service configuration mode. You can specify that the service is used only for down MEPs, or associate the service with a bridge domain or xconnect where MIPs and up MEPs will be created.<br>The **id** sets the short MA name. |
| **Step 5** | **continuity-check interval** *time* [**loss-threshold** *threshold*]<br>**Example:**<br>`RP/0/RSP0/CPU0:router(config-cfm-dmn-svc)# continuity-check interval 100m loss-threshold 10` | (Optional) Enables Continuity Check and specifies the time interval at which CCMs are transmitted or to set the threshold limit for when a MEP is declared down. |
| **Step 6** | **continuity-check archive hold-time** *minutes*<br>**Example:**<br>`RP/0/RSP0/CPU0:router(config-cfm-dmn-svc)# continuity-check archive hold-time 100` | (Optional) Configures how long information about peer MEPs is stored after they have timed out. |
| **Step 7** | **continuity-check loss auto-traceroute**<br>**Example:**<br>`RP/0/RSP0/CPU0:router(config-cfm-dmn-svc)# continuity-check loss auto-traceroute` | (Optional) Configures automatic triggering of a traceroute when a MEP is declared down. |
| **Step 8** | **end** or **commit**<br>**Example:**<br>`RP/0/RSP0/CPU0:router(config-cfm-dmn-svc)# commit` | Saves configuration changes.<br>• When you use the **end** command, the system prompts you to commit changes:<br>`Uncommitted changes found, commit them before exiting(yes/no/cancel)? [cancel]:` |

| | Command or Action | Purpose |
|---|---|---|
| | | • Entering **yes** saves configuration changes to the running configuration file, exits the configuration session, and returns the router to EXEC mode.<br>• Entering **no** exits the configuration session and returns the router to EXEC mode without committing the configuration changes.<br>• Entering **cancel** leaves the router in the current configuration session without exiting or committing the configuration changes.<br>• Use the **commit** command to save the configuration changes to the running configuration file and remain within the configuration session. |

## Configuring Automatic MIP Creation for a CFM Service

For more information about the algorithm for creating MIPs, see the MIP Creation.

To configure automatic MIP creation for a CFM service, complete the following steps:

### SUMMARY STEPS

1. **configure**
2. **ethernet cfm**
3. **domain** *domain-name* **level** *level-value* [**id** [**null**] [**dns** *DNS-name*] [**mac** *H.H.H*] [**string** *string*] ]
4. **service** *service-name* {**bridge group** *bridge-domain-group* **bridge-domain** *bridge-domain-name* | **down-meps | xconnect group** *xconnect-group-name* **p2p** *xconnect-name*}[**id** [**icc-based** *icc-string umc-string*] | [**string** *text*] | [**number** *number*] | [**vlan-id** *id-number*] | [**vpn-id** *oui-vpnid*]]
5. **mip auto-create** {**all** | **lower-mep-only**}
6. **end** or **commit**

### DETAILED STEPS

| | Command or Action | Purpose |
|---|---|---|
| **Step 1** | **configure**<br>**Example:**<br>`RP/0/RSP0/CPU0:router# configure` | Enters global configuration mode. |
| **Step 2** | **ethernet cfm**<br>**Example:**<br>`RP/0/RSP0/CPU0:router# ethernet cfm` | Enters the Ethernet Connectivity Fault Management (CFM) configuration mode. |
| **Step 3** | **domain** *domain-name* **level** *level-value* [**id** [**null**] [**dns** *DNS-name*] [**mac** *H.H.H*] [**string** *string*] ] | Creates and names a container for all domain configurations and enters the CFM domain configuration mode. |

| | Command or Action | Purpose |
|---|---|---|
| | **Example:**<br>`RP/0/RSP0/CPU0:router(config-cfm)# domain Domain_One level 1 id string D1` | The level must be specified.<br>The **id** is the maintenance domain identifier (MDID) and is used as the first part of the maintenance association identifier (MAID) in CFM frames. If the MDID is not specified, the domain name is used as the MDID by default. |
| **Step 4** | **service** *service-name* {**bridge group** *bridge-domain-group* **bridge-domain** *bridge-domain-name* \| **down-meps \|** **xconnect group** *xconnect-group-name* **p2p** *xconnect-name*}[**id** [**icc-based** *icc-string umc-string*] \| [**string** *text*] \| [**number** *number*] \| [**vlan-id** *id-number*] \| [**vpn-id** *oui-vpnid*]]<br>**Example:**<br>`RP/0/RSP0/CPU0:router(config-cfm-dmn)# service Bridge_Service bridge group BD1 bridge-domain B1` | Configures and associates a service with the domain and enters CFM domain service configuration mode. You can specify that the service is used only for down MEPs, or associate the service with a bridge domain or xconnect where MIPs and up MEPs will be created.<br>The **id** sets the short MA name. |
| **Step 5** | **mip auto-create** {**all** \| **lower-mep-only**}<br>**Example:**<br>`RP/0/RSP0/CPU0:router(config-cfm-dmn-svc)# mip auto-create all` | (Optional) Enables the automatic creation of MIPs in a bridge domain or xconnect. |
| **Step 6** | **end** or **commit**<br>**Example:**<br>`RP/0/RSP0/CPU0:router(config-cfm-dmn-svc)# commit` | Saves configuration changes.<br>• When you use the **end** command, the system prompts you to commit changes:<br>`Uncommitted changes found, commit them before exiting(yes/no/cancel)? [cancel]:`<br>• Entering **yes** saves configuration changes to the running configuration file, exits the configuration session, and returns the router to EXEC mode.<br>• Entering **no** exits the configuration session and returns the router to EXEC mode without committing the configuration changes.<br>• Entering **cancel** leaves the router in the current configuration session without exiting or committing the configuration changes.<br>• Use the **commit** command to save the configuration changes to the running configuration file and remain within the configuration session. |

## Configuring Cross-Check on a MEP for a CFM Service

To configure cross-check on a MEP for a CFM service and specify the expected set of MEPs, complete the following steps:

### SUMMARY STEPS

1. **configure**
2. **ethernet cfm**
3. **domain** *domain-name* **level** *level-value* [**id** [**null**] [**dns** *DNS-name*] [**mac** *H.H.H*] [**string** *string*] ]
4. **service** *service-name* {**bridge group** *bridge-domain-group* **bridge-domain** *bridge-domain-name* | **down-meps | xconnect group** *xconnect-group-name* **p2p** *xconnect-name*}[**id** [**icc-based** *icc-string umc-string*] | [**string** *text*] | [**number** *number*] | [**vlan-id** *id-number*] | [**vpn-id** *oui-vpnid*]]
5. **mep crosscheck**
6. **mep-id** *mep-id-number* [**mac-address** *mac-address*]
7. **end** or **commit**

### DETAILED STEPS

| | Command or Action | Purpose |
|---|---|---|
| **Step 1** | **configure**<br>**Example:**<br>`RP/0/RSP0/CPU0:router# configure` | Enters global configuration mode. |
| **Step 2** | **ethernet cfm**<br>**Example:**<br>`RP/0/RSP0/CPU0:router# ethernet cfm` | Enters the Ethernet Connectivity Fault Management (CFM) configuration mode. |
| **Step 3** | **domain** *domain-name* **level** *level-value* [**id** [**null**] [**dns** *DNS-name*] [**mac** *H.H.H*] [**string** *string*] ]<br>**Example:**<br>`RP/0/RSP0/CPU0:router(config-cfm)# domain Domain_One level 1 id string D1` | Creates and names a container for all domain configurations and enters the CFM domain configuration mode.<br>The level must be specified.<br>The **id** is the maintenance domain identifier (MDID) and is used as the first part of the maintenance association identifier (MAID) in CFM frames. If the MDID is not specified, the domain name is used as the MDID by default. |
| **Step 4** | **service** *service-name* {**bridge group** *bridge-domain-group* **bridge-domain** *bridge-domain-name* \| **down-meps \| xconnect group** *xconnect-group-name* **p2p** *xconnect-name*}[**id** [**icc-based** *icc-string umc-string*] \| [**string** *text*] \| [**number** *number*] \| [**vlan-id** *id-number*] \| [**vpn-id** *oui-vpnid*]]<br>**Example:**<br>`RP/0/RSP0/CPU0:router(config-cfm-dmn)# service Bridge_Service bridge group BD1 bridge-domain B1` | Configures and associates a service with the domain and enters CFM domain service configuration mode. You can specify that the service is used only for down MEPs, or associate the service with a bridge domain or xconnect where MIPs and up MEPs will be created.<br>The **id** sets the short MA name. |

| | Command or Action | Purpose |
|---|---|---|
| **Step 5** | **mep crosscheck**<br>**Example:**<br>`RP/0/RSP0/CPU0:router(config-cfm-dmn-svc)# mep crosscheck mep-id 10` | Enters CFM MEP crosscheck configuration mode. |
| **Step 6** | **mep-id** *mep-id-number* [**mac-address** *mac-address*]<br>**Example:**<br>`RP/0/RSP0/CPU0:router(config-cfm-xcheck)# mep-id 10` | Enables cross-check on a MEP.<br>**Note** • Repeat this command for every MEP that you want included in the expected set of MEPs for cross-check. |
| **Step 7** | **end** or **commit**<br>**Example:**<br>`RP/0/RSP0/CPU0:router(config-cfm-xcheck)# commit` | Saves configuration changes.<br>• When you use the **end** command, the system prompts you to commit changes:<br>`Uncommitted changes found, commit them before exiting(yes/no/cancel)? [cancel]:`<br>• Entering **yes** saves configuration changes to the running configuration file, exits the configuration session, and returns the router to EXEC mode.<br>• Entering **no** exits the configuration session and returns the router to EXEC mode without committing the configuration changes.<br>• Entering **cancel** leaves the router in the current configuration session without exiting or committing the configuration changes.<br>• Use the **commit** command to save the configuration changes to the running configuration file and remain within the configuration session. |

## Configuring Other Options for a CFM Service

To configure other options for a CFM service, complete the following steps:

### SUMMARY STEPS

1. **configure**
2. **ethernet cfm**
3. **domain** *domain-name* **level** *level-value* [**id** [**null**] [**dns** *DNS-name*] [**mac** *H.H.H*] [**string** *string*] ]
4. **service** *service-name* {**bridge group** *bridge-domain-group* **bridge-domain** *bridge-domain-name* | **down-meps** | **xconnect group** *xconnect-group-name* **p2p** *xconnect-name*}[**id** [**icc-based** *icc-string umc-string*] | [**string** *text*] | [**number** *number*] | [**vlan-id** *id-number*] | [**vpn-id** *oui-vpnid*]]
5. **maximum-meps** *number*

6. **log** {**ais**|**continuity-check errors**|**continuity-check mep changes**|**crosscheck errors**|**efd**}
7. **end** or **commit**

## DETAILED STEPS

| | Command or Action | Purpose |
|---|---|---|
| **Step 1** | **configure**<br>**Example:**<br>`RP/0/RSP0/CPU0:router# configure` | Enters global configuration mode. |
| **Step 2** | **ethernet cfm**<br>**Example:**<br>`RP/0/RSP0/CPU0:router# ethernet cfm` | Enters the Ethernet Connectivity Fault Management (CFM) configuration mode. |
| **Step 3** | **domain** *domain-name* **level** *level-value* [**id** [**null**] [**dns** *DNS-name*] [**mac** *H.H.H*] [**string** *string*] ]<br>**Example:**<br>`RP/0/RSP0/CPU0:router(config-cfm)# domain Domain_One level 1 id string D1` | Creates and names a container for all domain configurations and enters the CFM domain configuration mode.<br>The level must be specified.<br>The **id** is the maintenance domain identifier (MDID) and is used as the first part of the maintenance association identifier (MAID) in CFM frames. If the MDID is not specified, the domain name is used as the MDID by default. |
| **Step 4** | **service** *service-name* {**bridge group** *bridge-domain-group* **bridge-domain** *bridge-domain-name* \| **down-meps** \| **xconnect group** *xconnect-group-name* **p2p** *xconnect-name*}[**id** [**icc-based** *icc-string umc-string*] \| [**string** *text*] \| [**number** *number*] \| [**vlan-id** *id-number*] \| [**vpn-id** *oui-vpnid*]]<br>**Example:**<br>`RP/0/RSP0/CPU0:router(config-cfm-dmn)# service Bridge_Service bridge group BD1 bridge-domain B1` | Configures and associates a service with the domain and enters CFM domain service configuration mode. You can specify that the service is used only for down MEPs, or associate the service with a bridge domain or xconnect where MIPs and up MEPs will be created.<br>The **id** sets the short MA name. |
| **Step 5** | **maximum-meps** *number*<br>**Example:**<br>`RP/0/RSP0/CPU0:router(config-cfm-dmn-svc)# maximum-meps 1000` | (Optional) Configures the maximum number (2 to 8190) of MEPs across the network, which limits the number of peer MEPs recorded in the database. |
| **Step 6** | **log** {**ais**\|**continuity-check errors**\|**continuity-check mep changes**\|**crosscheck errors**\|**efd**}<br>**Example:**<br>`RP/0/RSP0/CPU0:router(config-cfm-dmn-svc)# log continuity-check errors` | (Optional) Enables logging of certain types of events. |
| **Step 7** | **end** or **commit** | Saves configuration changes. |

| | Command or Action | Purpose |
|---|---|---|
| | **Example:**<br><br>`RP/0/RSP0/CPU0:router(config-cfm-dmn-svc)# commit` | • When you use the **end** command, the system prompts you to commit changes:<br><br>`Uncommitted changes found, commit them before exiting(yes/no/cancel)? [cancel]:`<br><br>• Entering **yes** saves configuration changes to the running configuration file, exits the configuration session, and returns the router to EXEC mode.<br><br>• Entering **no** exits the configuration session and returns the router to EXEC mode without committing the configuration changes.<br><br>• Entering **cancel** leaves the router in the current configuration session without exiting or committing the configuration changes.<br><br>• Use the **commit** command to save the configuration changes to the running configuration file and remain within the configuration session. |

## Configuring CFM MEPs

When you configure CFM MEPs, consider these guidelines:

- Up to 32000 local MEPs are supported per card.
- CFM maintenance points can be created on these interface types:
  - All physical Ethernet interfaces (except for the RSP Management interfaces).
  - Ethernet bundle interfaces.
  - All physical and bundle Ethernet sub-interfaces, providing the encapsulation is configured according to the following guidelines:

    Frames are only matched based on VLAN IDs and CoS bits.

    Frames are not matched using VLAN “any.”

    If frames are untagged, then the interface configuration on the Cisco ASR 9000 Series Router is such that there is no ambiguity on the sub-interface to which the untagged frame must be classified.
  - Ethernet bundle member interfaces—Only down MEPs at level 0 can be created.
- CFM maintenance points can be created on both Layer 2 and Layer 3 interfaces. On L3 interfaces, only down MEPs can be created.
- A new configuration under the MEP submode called loss-measurement counters is used to allocate the packet counters used for LMM.

### Restrictions

When you configure MEPs, consider these restrictions:

- Maintenance points at level 0 are not supported on bundle interfaces.
- CFM on Cisco IOS XR Software does not support a tag stack of more than two tags.
- If a subinterface is configured that matches untagged Ethernet frames (for example, by configuring the **encapsulation default** command), then you can not create a down MEP on the underlying physical or bundle interface.
- Up MEPs are not supported on Layer 3 interfaces.
- CCM packet must not go through L3VPN cloud.
- LBM/LBR packet must not go through L3VPN cloud.
- LTM/LTR packet must not go through L3VPN cloud.
- DMM/DMR packet must not go through L3VPN cloud.
- SLM/SLR packet must not go through L3VPN cloud.
- LMM/LMR packet must not go through L3VPN cloud.

## SUMMARY STEPS

1. **configure**
2. **interface** {**GigabitEthernet | TenGigE**} *interface-path-id*
3. **interface** {**GigabitEthernet | TenGigE | Bundle-Ether**} *interface-path-id***.***subinterface*
4. **vrf vrf-name**
5. **interface** {**FastEthernet | GigabitEthernet | TenGigE**} *interface-path-id*
6. **ethernet cfm**
7. **mep domain** *domain-name* **service** *service-name* **mep-id** *id-number*
8. **cos** *cos*
9. **end** or **commit**

## DETAILED STEPS

| | Command or Action | Purpose |
|---|---|---|
| **Step 1** | **configure**<br>**Example:**<br>`RP/0/RSP0/CPU0:router# configure` | Enters global configuration mode. |
| **Step 2** | **interface** {**GigabitEthernet | TenGigE**} *interface-path-id*<br>**Example:**<br>`RP/0//CPU0:router(config)# interface gigabitethernet 0/1/0/1` | Type of Ethernet interface on which you want to create a MEP. Enter **GigabitEthernet** or **TenGigE** and the physical interface or virtual interface.<br>**Note** • Use the **show interfaces** command to see a list of all interfaces currently configured on the router. |

| | Command or Action | Purpose |
|---|---|---|
| | | For more information about the syntax for the router, use the question mark (**?**) online help function. |
| **Step 3** | **interface** {**GigabitEthernet** \| **TenGigE** \| **Bundle-Ether**} *interface-path-id.subinterface*<br>**Example:**<br>`RP/0/RSP0/CPU0:router(config)# interface gigabitethernet 0/1/0/1` | Type of Ethernet interface on which you want to create a MEP. Enter **GigabitEthernet, TenGigE,** or **Bundle-Ether** and the physical interface or virtual interface followed by the subinterface path ID.<br>Naming notation is *interface-path-id.subinterface*. The period in front of the subinterface value is required as part of the notation.<br>For more information about the syntax for the router, use the question mark (**?**) online help function. |
| **Step 4** | **vrf vrf-name**<br>**Example:**<br>`RP/0/RSP0/CPU0:router(config-if)# vrf vrf_A` | Configures a VRF instance and enters VRF configuration mode. For more information on configuring VRF interfaces, refer the *Connecting MPLS VPN Customers* section in the *Cisco ASR 9000 Series MPLS Layer 3 VPN Configuration Guide*. |
| **Step 5** | **interface** {**FastEthernet** \| **GigabitEthernet** \| **TenGigE**} *interface-path-id*<br>**Example:**<br>`RP/0/RSP0/CPU0:router(config)# interface gigabitethernet 0/1/0/1` | Type of Ethernet interface on which you want to create a MEP. Enter **FastEthernet, GigabitEthernet** or **TenGigE** and the physical interface or virtual interface.<br>**Note** • Use the **show interfaces** command to see a list of all interfaces currently configured on the router.<br>For more information about the syntax for the router, use the question mark (**?**) online help function. |
| **Step 6** | **ethernet cfm**<br>**Example:**<br>`RP/0/RSP0/CPU0:router(config-if)# ethernet cfm` | Enters interface Ethernet CFM configuration mode. |
| **Step 7** | **mep domain** *domain-name* **service** *service-name* **mep-id** *id-number*<br>**Example:**<br>`RP/0/RSP0/CPU0:router(config-if-cfm)# mep domain Dm1 service Sv1 mep-id 1` | Creates a maintenance end point (MEP) on an interface and enters interface CFM MEP configuration mode. |
| **Step 8** | **cos** *cos*<br>**Example:**<br>`RP/0/RSP0/CPU0:router(config-if-cfm-mep)# cos 7` | (Optional) Configures the class of service (CoS) (from 0 to 7) for all CFM packets generated by the MEP on an interface. If not configured, the CoS is inherited from the Ethernet interface. |
| **Step 9** | **end** or **commit** | Saves configuration changes. |

| | Command or Action | Purpose |
|---|---|---|
| | **Example:**<br>`RP/0/RSP0/CPU0:router(config-if-cfm-mep)# commit` | • When you use the **end** command, the system prompts you to commit changes:<br>`Uncommitted changes found, commit them before exiting(yes/no/cancel)? [cancel]:`<br>• Entering **yes** saves configuration changes to the running configuration file, exits the configuration session, and returns the router to EXEC mode.<br>• Entering **no** exits the configuration session and returns the router to EXEC mode without committing the configuration changes.<br>• Entering **cancel** leaves the router in the current configuration session without exiting or committing the configuration changes.<br>• Use the **commit** command to save the configuration changes to the running configuration file and remain within the configuration session. |

## Configuring Y.1731 AIS

This section has the following step procedures:

## Configuring AIS in a CFM Domain Service

Use the following procedure to configure Alarm Indication Signal (AIS) transmission for a CFM domain service and configure AIS logging.

### SUMMARY STEPS

1. **configure**
2. **ethernet cfm**
3. **domain** *name* **level** *level*
4. **service** *name* **bridge group** *name* **bridge-domain** *name*
5. **service** *name* **xconnect group** *xconnect-group-name* **p2p** *xconnect-name*
6. **ais transmission** [**interval** {**1s**|**1m**}][**cos** *cos*]
7. **log ais**
8. **end** or **commit**

### DETAILED STEPS

| | Command or Action | Purpose |
|---|---|---|
| **Step 1** | **configure**<br>**Example:** | Enters global configuration mode. |

| | Command or Action | Purpose |
|---|---|---|
| | `RP/0//CPU0:router# configure` | |
| **Step 2** | **ethernet cfm**<br>**Example:**<br>`RP/0//CPU0:router(config)# ethernet cfm` | Enters Ethernet CFM global configuration mode. |
| **Step 3** | **domain** *name* **level** *level*<br>**Example:**<br>`RP/0//CPU0:router(config-cfm)# domain D1 level 1` | Specifies the domain and domain level. |
| **Step 4** | **service** *name* **bridge group** *name* **bridge-domain** *name*<br>**Example:**<br>`RP/0/RSP0/CPU0:router(config-cfm-dmn)# service S1 bridge group BG1 bridge-domain BD2` | Specifies the service, bridge group, and bridge domain. |
| **Step 5** | **service** *name* **xconnect group** *xconnect-group-name* **p2p** *xconnect-name*<br>**Example:**<br>`RP/0//CPU0:router(config-cfm-dmn)# service S1 bridge group BG1 bridge-domain BD2` | Specifies the service and cross-connect group and name. |
| **Step 6** | **ais transmission** [**interval** {**1s**\|**1m**}][**cos** *cos*]<br>**Example:**<br>`RP/0//CPU0:router(config-cfm-dmn-svc)# ais transmission interval 1m cos 7` | Configures Alarm Indication Signal (AIS) transmission for a Connectivity Fault Management (CFM) domain service. |
| **Step 7** | **log ais**<br>**Example:**<br>`RP/0//CPU0:router(config-cfm-dmn-svc)# log ais` | Configures AIS logging for a Connectivity Fault Management (CFM) domain service to indicate when AIS or LCK packets are received. |
| **Step 8** | **end** or **commit**<br>**Example:**<br>`RP/0//CPU0:router(config-sla-prof-stat-cfg)# commit` | Saves configuration changes.<br>• When you issue the **end** command, the system prompts you to commit changes:<br>`Uncommitted changes found, commit them before exiting(yes/no/cancel)? [cancel]:`<br>• Entering **yes** saves configuration changes to the running configuration file, exits the configuration session, and returns the router to EXEC mode. |

| | Command or Action | Purpose |
|---|---|---|
| | | • Entering **no** exits the configuration session and returns the router to EXEC mode without committing the configuration changes.<br>• Entering **cancel** leaves the router in the current configuration session without exiting or committing the configuration changes.<br>• Use the **commit** command to save the configuration changes to the running configuration file and remain within the configuration session. |

## Configuring AIS on a CFM Interface

To configure AIS on a CFM interface, perform the following steps:

### SUMMARY STEPS

1. **configure**
2. **interface gigabitethernet** *interface-path-id*
3. **ethernet cfm**
4. **ais transmission up interval 1m cos** *cos*
5. **end** or **commit**

### DETAILED STEPS

| | Command or Action | Purpose |
|---|---|---|
| **Step 1** | **configure**<br>**Example:**<br>`RP/0//CPU0:router# configure` | Enters global configuration mode. |
| **Step 2** | **interface gigabitethernet** *interface-path-id*<br>**Example:**<br>`RP/0//CPU0:router# interface gigabitethernet 0/1/0/2` | Enters interface configuration mode. |
| **Step 3** | **ethernet cfm**<br>**Example:**<br>`RP/0//CPU0:router(config)# ethernet cfm` | Enters Ethernet CFM interface configuration mode. |
| **Step 4** | **ais transmission up interval 1m cos** *cos*<br>**Example:**<br>`RP/0//CPU0:router(config-if-cfm)# ais transmission up interval 1m cos 7` | Configures Alarm Indication Signal (AIS) transmission on a Connectivity Fault Management (CFM) interface. |

| | Command or Action | Purpose |
|---|---|---|
| **Step 5** | **end** or **commit**<br>**Example:**<br>`RP/0//CPU0:router(config-sla-prof-stat-cfg)# commit` | Saves configuration changes.<br>• When you issue the **end** command, the system prompts you to commit changes:<br>`Uncommitted changes found, commit them before exiting(yes/no/cancel)? [cancel]:`<br>• Entering **yes** saves configuration changes to the running configuration file, exits the configuration session, and returns the router to EXEC mode.<br>• Entering **no** exits the configuration session and returns the router to EXEC mode without committing the configuration changes.<br>• Entering **cancel** leaves the router in the current configuration session without exiting or committing the configuration changes.<br>• Use the **commit** command to save the configuration changes to the running configuration file and remain within the configuration session. |

## Configuring EFD for a CFM Service

To configure EFD for a CFM service, complete the following steps.

**Restrictions**

EFD is not supported on up MEPs. It can only be configured on down MEPs, within a particular service.

### SUMMARY STEPS

1. **configure**
2. **ethernet cfm**
3. **domain** *domain-name* **level** *level-value*
4. **service** *service-name* **down-meps**
5. **efd**
6. **log efd**
7. **end** or **commit**

### DETAILED STEPS

| | Command or Action | Purpose |
|---|---|---|
| **Step 1** | **configure**<br>**Example:**<br>`RP/0//CPU0:router# configure` | Enters global configuration mode. |

| | Command or Action | Purpose |
|---|---|---|
| **Step 2** | **ethernet cfm**<br>**Example:**<br>`RP/0//CPU0:router(config)# ethernet cfm` | Enters CFM configuration mode. |
| **Step 3** | **domain** *domain-name* **level** *level-value*<br>**Example:**<br>`RP/0//CPU0:router(config-cfm-dmn)# domain D1 level 1` | Specifies or creates the CFM domain and enters CFM domain configuration mode. |
| **Step 4** | **service** *service-name* **down-meps**<br>**Example:**<br>`RP/0//CPU0:router(config-cfm-dmn)# service S1 down-meps` | Specifies or creates the CFM service for down MEPS and enters CFM domain service configuration mode. |
| **Step 5** | **efd**<br>**Example:**<br>`RP/0//CPU0:router(config-cfm-dmn-svc)# efd` | Enables EFD on all down MEPs in the down MEPS service. |
| **Step 6** | **log efd**<br>**Example:**<br>`RP/0//CPU0:router(config-cfm-dmn-svc)# log efd` | (Optional) Enables logging of EFD state changes on an interface. |
| **Step 7** | **end** or **commit**<br>**Example:**<br>`RP/0//CPU0:router(config-cfm-dmn-svc)# commit` | Saves configuration changes.<br>• When you issue the **end** command, the system prompts you to commit changes:<br>`Uncommitted changes found, commit them before exiting(yes/no/cancel)? [cancel]:`<br>• Entering **yes** saves configuration changes to the running configuration file, exits the configuration session, and returns the router to EXEC mode.<br>• Entering **no** exits the configuration session and returns the router to EXEC mode without committing the configuration changes.<br>• Entering **cancel** leaves the router in the current configuration session without exiting or committing the configuration changes.<br>• Use the **commit** command to save the configuration changes to the running configuration file and remain within the configuration session. |

## Verifying the EFD Configuration

This example shows how to display all interfaces that are shut down because of Ethernet Fault Detection (EFD):

```
RP/0/RSP0/CPU0:router# show efd interfaces

Server VLAN MA
==============
Interface         Clients
-------------------------
GigE0/0/0/0.0     CFM
```

## Configuring Flexible VLAN Tagging for CFM

Use this procedure to set the number of tags in CFM packets from up MEPs to 1, in a CFM domain service.

### SUMMARY STEPS

1. **configure**
2. **ethernet cfm**
3. **domain** *name* **level** *level*
4. **service** *name* **bridge group** *name* **bridge-domain** *name*
5. **tags** *number*
6. **end** or **commit**

### DETAILED STEPS

| | Command or Action | Purpose |
|---|---|---|
| **Step 1** | **configure**<br>**Example:**<br>`RP/0/RSP0/CPU0:router# configure` | Enters global configuration mode. |
| **Step 2** | **ethernet cfm**<br>**Example:**<br>`RP/0/RSP0/CPU0:router(config)# ethernet cfm` | Enters Ethernet CFM global configuration mode. |
| **Step 3** | **domain** *name* **level** *level*<br>**Example:**<br>`RP/0/RSP0/CPU0:router(config-cfm)# domain D1 level 1` | Specifies the domain and domain level. |
| **Step 4** | **service** *name* **bridge group** *name* **bridge-domain** *name*<br>**Example:**<br>`RP/0/RSP0/CPU0:router(config-cfm-dmn)# service S2 bridge group BG1 bridge-domain BD2` | Specifies the service, bridge group, and bridge domain. |

| | Command or Action | Purpose |
|---|---|---|
| **Step 5** | **tags** *number*<br>**Example:**<br>`RP/0/RSP0/CPU0:router(config-cfm-dmn-svc)# tags 1` | Specifies the number of tags in CFM packets from up MEPs. Currently, the only valid value is 1. |
| **Step 6** | **end** or **commit**<br>**Example:**<br>`RP/0/RSP0/CPU0:router(config-cfm-dmn-svc)# commit` | Saves configuration changes.<br>• When you issue the **end** command, the system prompts you to commit changes:<br>`Uncommitted changes found, commit them before exiting(yes/no/cancel)? [cancel]:`<br>• Entering **yes** saves configuration changes to the running configuration file, exits the configuration session, and returns the router to EXEC mode.<br>• Entering **no** exits the configuration session and returns the router to EXEC mode without committing the configuration changes.<br>• Entering **cancel** leaves the router in the current configuration session without exiting or committing the configuration changes.<br>• Use the **commit** command to save the configuration changes to the running configuration file and remain within the configuration session. |

## Verifying the CFM Configuration

To verify the CFM configuration, use one or more of the following commands:

| | |
|---|---|
| **show ethernet cfm configuration-errors** [**domain** *domain-name*] [**interface** *interface-path-id* ] | Displays information about errors that are preventing configured CFM operations from becoming active, as well as any warnings that have occurred. |
| **show ethernet cfm local maintenance-points domain** *name* [**service** *name]* \| **interface** *type interface-path-id*] [**mep** \| **mip**] | Displays a list of local maintenance points. |

## Troubleshooting Tips

To troubleshoot problems within the CFM network, perform the following steps:

### SUMMARY STEPS

1. To verify connectivity to a problematic MEP, use the **ping ethernet cfm** command as shown in the following example:

2. If the results of the **ping ethernet cfm** command show a problem with connectivity to the peer MEP, use the **traceroute ethernet cfm** command to help further isolate the location of the problem as shown in the following example:

## DETAILED STEPS

**Step 1** To verify connectivity to a problematic MEP, use the **ping ethernet cfm** command as shown in the following example:

```
RP/0/RSP0/CPU0:router# ping ethernet cfm domain D1 service S1 mep-id 16 source
interface GigabitEthernet 0/0/0/0

Type escape sequence to abort.
Sending 5 CFM Loopbacks, timeout is 2 seconds -
Domain foo (level 2), Service foo
Source: MEP ID 1, interface GigabitEthernet0/0/0/0
Target: 0001.0002.0003 (MEP ID 16):
  Running (5s) ...
Success rate is 60.0 percent (3/5), round-trip min/avg/max = 1251/1349/1402 ms
Out-of-sequence: 0.0 percent (0/3)
Bad data: 0.0 percent (0/3)
Received packet rate: 1.4 pps
```

**Step 2** If the results of the **ping ethernet cfm** command show a problem with connectivity to the peer MEP, use the **traceroute ethernet cfm** command to help further isolate the location of the problem as shown in the following example:

```
RP/0/RSP0/CPU0:router# traceroute ethernet cfm domain D1 service S1 mep-id 16 source
 interface gigabitethernet 0/0/0/0

Traceroutes in domain D1 (level 4), service S1
Source: MEP-ID 1, interface GigabitEthernet0/0/0/0
================================================================================
Traceroute at 2009-05-18 12:09:10 to 0001.0203.0402,
TTL 64, Trans ID 2:

Hop Hostname/Last            Ingress MAC/name       Egress MAC/Name        Relay
--- ------------------------ ---------------------- ---------------------- -----
  1 ios                      0001.0203.0400 [Down]                         FDB
      0000-0001.0203.0400    Gi0/0/0/0
  2 abc                                             0001.0203.0401 [Ok]    FDB
      ios                                           Not present
  3 bcd                      0001.0203.0402 [Ok]                           Hit
      abc                    GigE0/0
Replies dropped: 0
```

If the target was a MEP, verify that the last hop shows “Hit” in the Relay field to confirm connectivity to the peer MEP.

If the Relay field contains “MPDB” for any of the hops, then the target MAC address was not found in the bridge MAC learning table at that hop, and the result is relying on CCM learning. This result can occur under normal conditions, but it can also indicate a problem. If you used the **ping ethernet cfm** command before using the **traceroute ethernet cfm** command, then the MAC address should have been learned. If “MPDB” is appearing in that case, then this indicates a problem at that point in the network.

# Configuring Ethernet SLA

This section describes how to configure Ethernet SLA.

## Ethernet SLA Configuration Guidelines

**Caution** Certain SLA configurations can use a large amount of memory which can affect the performance of other features on the router.

Before you configure Ethernet SLA, consider the following guidelines:

- Aggregation—Use of the **aggregate none** command significantly increases the amount of memory required because each individual measurement is recorded, rather than just counts for each aggregation bin. When you configure aggregation, consider that more bins will require more memory.
- Buckets archive—When you configure the **buckets archive** command, consider that the more history that is kept, the more memory will be used.
- Measuring two statistics (such as both delay and jitter) will use approximately twice as much memory as measuring one.
- Separate statistics are stored for one-way source-to-destination and destination-to-source measurements, which consumes twice as much memory as storing a single set of round-trip statistics.
- The Cisco ASR 9000 Series Router supports SLA packet intervals of 100 ms and longer. If Ethernet SLA is configured, the overall combined packet rate for CCMs and SLA frames is 16000 frames-per-second in each direction, per card.
- You must define the schedule before you configure SLA probe parameters to send probes for a particular profile. It is recommended to set up the profile—probe, statistics, and schedule before any commit.

**Note** When the **once** keyword is used for 'send burst' ('send burst once' rather than 'send burst every'), it stops the collection of statistics with the packets that cross probe boundaries.

The following procedure provides the steps to configure Ethernet Service Level Agreement (SLA) monitoring at Layer 2.

To configure SLA, perform the following tasks:

## Configuring an SLA Operation Profile

To configure a profile, perform the following steps:

### SUMMARY STEPS

1. **configure**
2. **ethernet sla**
3. **profile** *profile-name* **type** {**cfm-delay-measurement** | **cfm-loopback** | **cfm-synthetic-loss-measurement**|
4. **cfm-loss-measurement**}
5. **end** or **commit**

## DETAILED STEPS

**Step 1** **configure**

**Example:**

```
RP/0/RSP0/CPU0:router# configure
```

Enters global configuration mode.

**Step 2** **ethernet sla**

**Example:**

```
RP/0/RSP0/CPU0:router# ethernet sla
```

Enters the SLA configuration mode.

**Step 3** **profile** *profile-name* **type** {**cfm-delay-measurement** | **cfm-loopback** | **cfm-synthetic-loss-measurement**|
**Step 4** **cfm-loss-measurement**}

**Example:**

```
RP/0/RSP0/CPU0:router(config-sla)# profile  Prof1 type cfm-loopback
```

Creates an SLA operation profile and enters the SLA profile configuration mode.

**Step 5** **end** or **commit**

**Example:**

```
RP/0/RSP0/CPU0:router(config-sla)# commit
```

Saves configuration changes.

- When you issue the **end** command, the system prompts you to commit changes:

```
Uncommitted changes found, commit them before exiting(yes/no/cancel)?
[cancel]:
```

- Entering **yes** saves configuration changes to the running configuration file, exits the configuration session, and returns the router to EXEC mode.
- Entering **no** exits the configuration session and returns the router to EXEC mode without committing the configuration changes.
- Entering **cancel** leaves the router in the current configuration session without exiting or committing the configuration changes.
- Use the **commit** command to save the configuration changes to the running configuration file and remain within the configuration session.

## Configuring a Schedule for an SLA Operation Probe in a Profile

This section describes how to configure a schedule for an SLA operation probe on an ongoing basis within an SLA profile. For information about how to configure a schedule for a limited, on-demand SLA operation, see the Configuring an On-Demand SLA Operation.

To configure a schedule for an SLA operation probe, perform the following steps beginning in SLA profile configuration mode:

### SUMMARY STEPS

1. **schedule every week on** *day* [**at** *hh*:*mm*] [**for** *duration* {**seconds | minutes | hours | days | week**}] or **schedule every day** [**at** *hh*:*mm*] [**for** *duration* {**seconds | minutes | hours | days | week**}] **or schedule every** *number* {**hours | minutes}[first at** *hh*:*mm*[**.***ss*]] [**for** *duration* {**seconds | minutes | hours | days | week**}]
2. **end** or **commit**

### DETAILED STEPS

**Step 1** **schedule every week on** *day* [**at** *hh*:*mm*] [**for** *duration* {**seconds | minutes | hours | days | week**}] or **schedule every day** [**at** *hh*:*mm*] [**for** *duration* {**seconds | minutes | hours | days | week**}] **or schedule every** *number* {**hours | minutes}[first at** *hh*:*mm*[**.***ss*]] [**for** *duration* {**seconds | minutes | hours | days | week**}]

**Example:**

```
RP/0/RSP0/CPU0:router(config-sla-prof)# schedule every week on Monday at 23:30 for 1 hour
or
RP/0/RSP0/CPU0:router(config-sla-prof)# schedule every day at 11:30 for 5 minutes
or
RP/0/RSP0/CPU0:router(config-sla-prof)# schedule every 2 hours first at 13:45:01
or

RP/0/RSP0/CPU0:router(config-sla-prof)# schedule every 6 hours for 2 hours
```

Schedules an operation probe in a profile. A profile may contain only one schedule.

**Note** The schedule start time starts after the configuration is committed and not at the time when the operation is configured.

For information on the *schedule* command behavior and usage guidelines, see *Interface and Hardware Component Command Reference for Cisco ASR 9000 Series Routers*, chapter *Ethernet OAM Commands*.

**Step 2** **end** or **commit**

**Example:**

```
RP/0/RSP0/CPU0:router(config-sla-prof-stat-cfg)# commit
```

Saves configuration changes.

- When you issue the **end** command, the system prompts you to commit changes:

```
Uncommitted changes found, commit them before exiting(yes/no/cancel)?
[cancel]:
```

- Entering **yes** saves configuration changes to the running configuration file, exits the configuration session, and returns the router to EXEC mode.
- Entering **no** exits the configuration session and returns the router to EXEC mode without committing the configuration changes.
- Entering **cancel** leaves the router in the current configuration session without exiting or committing the configuration changes.
- Use the **commit** command to save the configuration changes to the running configuration file and remain within the configuration session.

## Configuring SLA Probe Parameters in a Profile

To configure SLA probe parameters in a profile, perform these steps beginning in SLA profile configuration mode:

### SUMMARY STEPS

1. **probe**
2. **send burst** {**every** *number* {**seconds | minutes | hours} | once**} **packet count** *packets* **interval** *number* {**seconds | milliseconds**}
3. or
4. **send packet** {**every** *number* {**milliseconds | seconds | minutes | hours**} | **once**}
5. **packet size** *bytes* [**test pattern {hex 0xHHHHHHHH | pseudo-random**}]
6. **priority** *priority*
7. **synthetic loss calculation packets** *number*
8. **end** or **commit**

### DETAILED STEPS

**Step 1** **probe**

**Example:**

```
RP/0/RSP0/CPU0:router(config-sla-prof)# probe
```

Enters the SLA profile probe configuration mode.

**Step 2** **send burst** {**every** *number* {**seconds | minutes | hours} | once**} **packet count** *packets* **interval** *number* {**seconds | milliseconds**}

**Step 3** or

**Step 4** **send packet** {**every** *number* {**milliseconds | seconds | minutes | hours**} | **once**}

**Example:**

```
RP/0/RSP0/CPU0:router(config-sla-prof-pb)# send burst every 60 seconds packet count 100 interval 100
 milliseconds
or
```

```
RP/0/RSP0/CPU0:router(config-sla-prof-pb)# send burst once packet count 2 interval 1 second
or

RP/0/RSP0/CPU0:router(config-sla-prof-pb)# send packet every 100 milliseconds
```

Configures the number and timing of packets sent by a probe in an operations profile.

**Note** When the **once** keyword for 'send burst' ('send burst once' rather than 'send burst every') is used, it stops the collection of statistics with the packets that cross probe boundaries.

**Step 5** **packet size** *bytes* [**test pattern {hex 0xHHHHHHHH | pseudo-random**}]

**Example:**

```
RP/0/RSP0/CPU0:router(config-sla-prof-pb)# packet size 9000
```

Configures the minimum size (in bytes) for outgoing probe packets, including padding when necessary. Use the test pattern keyword to specify a hexadecimal string to use as the padding characters, or a pseudo-random bit sequence. The default padding is 0's. The packet size can be configured for SLM, loopback, and DMM/R probes.

**Step 6** **priority** *priority*

**Example:**

```
RP/0/RSP0/CPU0:router(config-sla-prof-pb)# priority 7
```

Configures the priority of outgoing SLA probe packets.

If the operation is running on an interface, which matches tagged traffic, then a priority value must be configured for the probe. This priority value must match the "on-the-wire" CoS value of the packets to be counted (after any tag rewrites). LMM packets are sent with this priority value as the CoS-value, and LMR packets must be received with the same CoS-value; otherwise, all LMRs are dropped. Note that this is the case even when aggregate counters are being collected.

If the operation is running on an interface which matches untagged traffic, then configuring a priority value is not permitted. In this case, only aggregate counters can be collected. When configuring data-loss measurement operations, configuration must also be applied to allocate the correct packet counters (matching the CoS values to be collected) on the interface, using the "loss-measurement counters" configuration under the MEP properties submode.

**Step 7** **synthetic loss calculation packets** *number*

**Example:**

```
RP/0/RSP0/CPU0:router(config-sla-prof-pb)# synthetic loss calculation packets 25
```

Configures the number of packets that must be used to make each FLR calculation in the case of synthetic loss measurements. This item can only be configured for packet types that support synthetic loss measurement.

An FLR value is calculated for each discrete block of packets. For instance, if a value of 10 is configured, the first FLR value would be calculated based on packets 0 - 9 and the second FLR value based on packets 10 - 19, and so on.

**Step 8** **end** or **commit**

**Example:**

```
RP/0/RSP0/CPU0:router(config-sla-prof-pb)# commit
```

Saves configuration changes.

- When you issue the **end** command, the system prompts you to commit changes:

```
Uncommitted changes found, commit them before exiting(yes/no/cancel)?
[cancel]:
```

- Entering **yes** saves configuration changes to the running configuration file, exits the configuration session, and returns the router to EXEC mode.
- Entering **no** exits the configuration session and returns the router to EXEC mode without committing the configuration changes.
- Entering **cancel** leaves the router in the current configuration session without exiting or committing the configuration changes.
- Use the **commit** command to save the configuration changes to the running configuration file and remain within the configuration session.

## Configuring SLA Statistics Measurement in a Profile

The Ethernet SLA feature supports measurement of one-way and two-way delay and jitter statistics, and one-way FLR statistics.

### Before you begin

To configure one-way delay or jitter measurements, you must first configure the **profile (SLA)** command using the **type cfm-delay-measurement** form of the command.

For valid one-way delay results, you need to have both local and remote devices time synchronized. In order to do this, you must select sources for frequency and time-of-day (ToD).

Frequency selection can be between any source of frequency available to the router, such as: BITS, GPS, SyncE or PTP. The ToD selection is between the source selected for frequency and PTP or DTI. Note that NTP is not sufficient.

For more information about frequency and time synchronization, refer to the *Configuring Frequency Synchronization on the Cisco ASR 9000 Series Router* and the *Configuring PTP on the Cisco ASR 9000 Series Router* modules in the *Cisco ASR 9000 Series Aggregation Services Router System Management Configuration Guide*.

**Restrictions**

One-way delay and jitter measurements are not supported by cfm-loopback profile types.

To configure SLA statistics measurement in a profile, perform these steps beginning in SLA profile configuration mode:

1. **statistics measure** {**one-way-delay-ds | one-way-delay-sd | one-way-jitter-ds | one-way-jitter-sd | round-trip-delay | round-trip-jitter | one-way-loss-ds | one-way-loss-sd**}

### SUMMARY STEPS

1. 
2. **aggregate** {**bins** *count* **width** *width* | **none**}
3. **buckets size** *number* {**per-probe** | **probes}**
4. **buckets archive** *number*

5. **end** or **commit**

## DETAILED STEPS

**Step 1** **Example:**

```
RP/0/RSP0/CPU0:router(config-sla-prof)# statistics measure round-trip-delay
```

Enables the collection of SLA statistics, and enters SLA profile statistics configuration mode.

**Step 2** **aggregate** {**bins** *count* **width** *width* | **none**}

**Example:**

```
RP/0/RSP0/CPU0:router(config-sla-prof-stat-cfg)# aggregate bins 100 width 10000
```

Configures the size and number of bins into which to aggregate the results of statistics collection. For delay measurements and data loss measurements, the default is that all values are aggregated into 1 bin. For synthetic loss measurements, the default is aggregation disabled.

- For delay measurements, a width between 1-10000, in milliseconds, must be specified if the number of bins is at least 2.
- For jitter measurements, a width between 1-10000, in milliseconds, must be specified if the number of bins is at least 3.
- For data loss measurements, a width between 1-100, in percentage points, must be specified if the number of bins is at least 2.
- For synthetic loss measurements, a width between 1-100, in percentage points, must be specified if the number of bins is at least 2.

**Step 3** **buckets size** *number* {**per-probe** | **probes}**

**Example:**

```
RP/0/RSP0/CPU0:router(config-sla-prof-stat-cfg)# buckets size 100 per-probe
```

Configures the size of the buckets in which statistics are collected.

**Step 4** **buckets archive** *number*

**Example:**

```
RP/0/RSP0/CPU0:router(config-sla-prof-stat-cfg)# buckets archive 50
```

Configures the number of buckets to store in memory.

**Step 5** **end** or **commit**

**Example:**

```
RP/0/RSP0/CPU0:router(config-sla-prof-stat-cfg)# commit
```

Saves configuration changes.

- When you issue the **end** command, the system prompts you to commit changes:

```
Uncommitted changes found, commit them before exiting(yes/no/cancel)?
[cancel]:
```

- Entering **yes** saves configuration changes to the running configuration file, exits the configuration session, and returns the router to EXEC mode.
- Entering **no** exits the configuration session and returns the router to EXEC mode without committing the configuration changes.
- Entering **cancel** leaves the router in the current configuration session without exiting or committing the configuration changes.
- Use the **commit** command to save the configuration changes to the running configuration file and remain within the configuration session.

## Configuring an SLA Operation

This section describes how to configure an ongoing SLA operation on a MEP using an SLA profile.

### SUMMARY STEPS

1. **interface** [**FastEthernet**
2. **ethernet cfm**
3. **mep domain** *domain-name* **service** *service-name* **mep-id** *id-number*
4. **sla operation profile** *profile-name* **target** {**mep-id** *id* | **mac-address** *mac-address*}
5. **end** or **commit**

### DETAILED STEPS

**Step 1** **interface** [**FastEthernet**

**Example:**

```
RP/0/RSP0/CPU0:router(config-if)# interface gigabitethernet 0/1/0/1
```

Physical interface or virtual interface.

**Note** • Use the **show interfaces** command to see a list of all interfaces currently configured on the router.

For more information about the syntax for the router, use the question mark (**?**) online help function.

**Step 2** **ethernet cfm**

**Example:**

```
RP/0/RSP0/CPU0:router(config-if)# ethernet cfm
```

Enters interface CFM configuration mode.

**Step 3** **mep domain** *domain-name* **service** *service-name* **mep-id** *id-number*

**Example:**

```
RP/0/RSP0/CPU0:router(config-if-cfm)# mep domain Dm1 service Sv1 mep-id 1
```

Creates a MEP on an interface and enters interface CFM MEP configuration mode.

**Step 4** **sla operation profile** *profile-name* **target** {**mep-id** *id* | **mac-address** *mac-address*}

**Example:**

```
RP/0/RSP0/CPU0:router(config-if-cfm-mep)# sla operation profile Profile_1 target mac-address
01:23:45:67:89:ab
```

Creates an operation instance from a MEP to a specified destination.

**Step 5** **end** or **commit**

**Example:**

```
RP/0/RSP0/CPU0:router(config-sla-prof-stat-cfg)# commit
```

Saves configuration changes.

- When you issue the **end** command, the system prompts you to commit changes:

```
Uncommitted changes found, commit them before exiting(yes/no/cancel)?
[cancel]:
```

- Entering **yes** saves configuration changes to the running configuration file, exits the configuration session, and returns the router to EXEC mode.
- Entering **no** exits the configuration session and returns the router to EXEC mode without committing the configuration changes.
- Entering **cancel** leaves the router in the current configuration session without exiting or committing the configuration changes.
- Use the **commit** command to save the configuration changes to the running configuration file and remain within the configuration session.

## Configuring an On-Demand SLA Operation

The Cisco ASR 9000 Series Router supports configuration of on-demand SLA operations to run on an as-needed basis for a finite period of time.

This section includes the following topics:

## Configuration Guidelines

When you configure on-demand SLA operations, consider the following guidelines:

- Each MEP supports up to 50 on-demand operations.
- Each card supports up to 250 on-demand operations.
- On-demand Ethernet SLA operations can be run in addition to any other ongoing scheduled SLA operations that you might have configured, and use similar amounts of CPU and router memory. When configuring

an on-demand Ethernet SLA operation, you should consider your existing SLA operation configuration and the potential impact of additional packet processing to your normal operations.

- If you do not specify a schedule for the on-demand operation, the probe defaults to running one time beginning two seconds from the execution of the command, and runs for a ten-second duration.
- If you do not specify the statistics for the probe to measure, it defaults to measuring all statistics, inlcuding these statistics by probe type:
  - CFM loopback—Two-way delay and jitter is measured by default.
  - CFM delay measurement—One-way delay and jitter in both directions, in addition to two-way delay and jitter is measured by default.
  - CFM synthetic loss measurement—One-way FLR in both directions is measured by default.
- The default operation mode is synchronous, where progress of the operation is reported to the console and the output of the statistics collection is displayed.

**Note** When the **once** keyword is used for 'send burst' ('send burst once' rather than 'send burst every'), it stops the collection of statistics with the packets that cross probe boundaries.

## Configuring an On-Demand Ethernet SLA Operation for CFM Delay Measurement

To configure an on-demand Ethernet SLA operation for CFM delay measurement, use the following command in privileged EXEC configuration mode:

| | |
|---|---|
| **ethernet sla on-demand operation type cfm-delay-measurement probe** [**priority** *number*] [**send** {**packet** {**once** \| **every** *number* {**milliseconds** \| **seconds** \| **minutes** \| **hours**}} \| **burst** {**once** \| **every** *number* {**seconds** \| **minutes** \| **hours**}} **packet count** *number* **interval** *number* {**milliseconds** \| **seconds**}] **domain** *domain-name* **source interface** *type interface-path-id* **target** {**mac-address** *H.H.H.H* \| **mep-id** *id-number*} [**statistics measure** {**one-way-delay-ds** \| **one-way-delay-sd** \| **one-way-jitter-ds** \| **one-way-jitter-sd** \| **round-trip-delay** \| **round-trip-jitter**}][**aggregate** {**none** \| **bins** *number* **width** *milliseconds*}] [**buckets** {**archive** *number* \| **size** *number* {**per-probe** \| **probes**}}] [**schedule** {**now** \| **at** *hh*:*mm*[.*ss*] [*day* [*month* [*year*]]] \| **in** *number* {**seconds** \| **minutes** \| **hours**}}[**for** *duration* {**seconds** \| **minutes** \| **hours**}][**repeat every** *number* {**seconds** \| **minutes** \| **hours**} **count** *probes*]] [**asynchronous**]<br><br>`RP/0/RSP0/CPU0:router# ethernet sla on-demand operation type cfm-delay-measurement probe domain D1 source interface TenGigE 0/6/1/0 target mep-id 100` | Configures an on-demand Ethernet SLA operation for CFM delay measurement.<br><br>The example shows a minimum configuration, that specifies the local domain and source interface and target MEP, using the following defaults:<br>• Send a burst once for a packet count of 10 and interval of 1 second (10-second probe).<br>• Use default class of service (CoS) for the egress interface.<br>• Measure all statistics, including both one-way and round-trip delay and jitter statistics.<br>• Aggregate statistics into one bin.<br>• Schedule now.<br>• Display results on the console. |

## Configuring an On-Demand Ethernet SLA Operation for CFM Loopback

To configure an on-demand Ethernet SLA operation for CFM loopback, use the following command in privileged EXEC configuration mode:

| | |
|---|---|
| **ethernet sla on-demand operation type cfm-loopback probe** [**packet size** *bytes* [**test pattern** {**hex 0x***HHHHHHHH* \| **pseudo-random**}]] [**priority** *number*] [**send** {**packet** {**once** \| **every** *number* {**milliseconds** \| **seconds** \| **minutes** \| **hours**}} \| **burst** {**once** \| **every** *number* {**seconds** \| **minutes** \| **hours**}} **packet count** *number* **interval** *number* {**milliseconds** \| **seconds**}] **domain** *domain-name* **source interface** *type interface-path-id* **target** {**mac-address** *H.H.H.H* \| **mep-id** *id-number*} [**statistics measure** {**round-trip-delay** \| **round-trip-jitter**}][**aggregate** {**none** \| **bins** *number* **width** *milliseconds*}][**buckets** {**archive** *number* \| **size** *number* {**per-probe** \| **probes**}}] [**schedule** {**now** \| **at** *hh*:*mm*[.*ss*] [*day* [*month* [*year*]]] \| **in** *number* {**seconds** \| **minutes** \| **hours**}}[**for** *duration* {**seconds** \| **minutes** \| **hours**}][**repeat every** *number* {**seconds** \| **minutes** \| **hours**} **count** *probes*]] [**asynchronous**]<br><br>`RP/0/RSP0/CPU0:router# ethernet sla on-demand operation type cfm-loopback probe packet size 1500 domain D1 source interface TenGigE 0/6/1/0 target mep-id 100` | Configures an on-demand Ethernet SLA operation for CFM loopback.<br><br>The example shows a minimum configuration, but specifies the option of a minimum packet size, and specifies the local domain and source interface and target MEP, using the following defaults:<br>• Send a burst once for a packet count of 10 and interval of 1 second (10-second probe).<br>• Use default test pattern of 0's for padding.<br>• Use default class of service (CoS) for the egress interface.<br>• Measure all statistics.<br>• Aggregate statistics into one bin.<br>• Schedule now.<br>• Display results on the console. |

## Configuring an On-Demand Ethernet SLA Operation for CFM Synthetic Loss Measurement

To configure an on-demand Ethernet SLA operation for CFM synthetic loss measurement, use this command in privileged EXEC configuration mode:

| | |
|---|---|
| **ethernet sla on-demand operation type cfm-synthetic-loss-measurement probe** [**priority** *number*] [**send** {**packet** {**once** \| **every** *number* {**milliseconds** \| **seconds** \| **minutes** \| **hours**}} \| **burst** {**once** \| **every** *number* {**seconds** \| **minutes** \| **hours**}} **packet count** *number* **interval** *number* {**milliseconds** \| **seconds**}] **domain** *domain-name* **source interface** *type interface-path-id* **target** {**mac-address** *H.H.H.H* \| **mep-id** *id-number*} [**synthetic loss calculation packets** *number*] [**statistics measure** {**one-way-loss-ds** \| **one-way-loss-sd**}][**aggregate** {**none** \| **bins** *number* **width** *milliseconds*}] [**buckets** {**archive** *number* \| **size** *number* {**per-probe** \| **probes**}}] [**schedule** {**now** \| **at** *hh*:*mm*[.*ss*] [*day* [*month* [*year*]]] \| **in** *number* {**seconds** \| **minutes** \| **hours**}}[**for** *duration* {**seconds** \| **minutes** \| **hours**}][**repeat every** *number* {**seconds** \| **minutes** \| **hours**} **count** *probes*]] [**asynchronous**]<br><br>`RP/0/RSP0/CPU0:router# ethernet sla on-demand operation type cfm-synthetic-loss-measurement probe domain D1 source interface TenGigE 0/6/1/0 target mac-address 2.3.4` | Configures an on-demand Ethernet SLA operation for CFM synthetic loss measurement.<br><br>The example shows a minimum configuration, that specifies the local domain and source interface and target MEP. |

## Verifying SLA Configuration

To verify SLA configuration, use one or more of these commands:

| | |
|---|---|
| **show ethernet sla configuration-errors** [**domain** *domain-name*] [**interface** *interface-path-id*] [**profile** *profile-name*] | Displays information about errors that are preventing configured SLA operations from becoming active, as well as any warnings that have occurred. |
| **show ethernet sla operations** [**detail**] [**domain** *domain-name*] [**interface** *interface-path-id*] [**profile** *profile-name*] | Displays information about configured SLA operations. |

# Configuring Ethernet LMI

To configure Ethernet LMI, complete the following tasks:

## Prerequisites for Configuring E-LMI

Before you configure E-LMI on the Cisco ASR 9000 Series Router, be sure that you complete the following requirements:

- Identify the local and remote UNIs in your network where you want to run E-LMI, and define a naming convention for them.
- Enable E-LMI on the corresponding CE interface link on a device that supports E-LMI CE operation, such as the Cisco Catalyst 3750 Metro Series Switches.

## Restrictions for Configuring E-LMI

When configuring E-LMI, consider the following restrictions:

- E-LMI is not supported on subinterfaces or bundle interfaces. E-LMI is configurable on Ethernet physical interfaces only.
- E-LMI is not supported on nV satellite access interfaces when the inter-chassis links are configured as a bundle.

## Creating EVCs for E-LMI

EVCs for E-LMI on the Cisco ASR 9000 Series Router are established by first configuring EFPs (Layer 2 subinterfaces) on the local UNI physical Ethernet interface link to the CE where E-LMI will be running, and also on the remote UNI link. Then, the EFPs need to be assigned to an L2VPN bridge domain to create the EVC.

To create EVCs, complete the following tasks:

## Configuring EFPs

This section describes the basic configuration of an EFP. For more information about configuration of other supported Layer 2 services, see the *Cisco ASR 9000 Series Aggregation Services Routers L2VPN and Ethernet Services Configuration Guide*.

To configure an EFP, complete these tasks:

### SUMMARY STEPS

1. **configure**
2. **interface** [**GigabitEthernet** | **TenGigE**] *interface-path-id*.*subinterface* **l2transport**
3. **encapsulation dot1q** *vlan-id* [**, untagged** | **,** *vlan-id* | **–***vlan-id*] [**exact** | **ingress source-mac** *mac-address* | **second-dot1q** *vlan-id*]
4. **end** or **commit**

### DETAILED STEPS

**Step 1** **configure**

**Example:**

```
RP/0/RSP0/CPU0:router# configure
```

Enters global configuration mode.

**Step 2** **interface** [**GigabitEthernet** | **TenGigE**] *interface-path-id*.*subinterface* **l2transport**

**Example:**

```
RP/0/RSP0/CPU0:router(config)# interface gigabitethernet 0/0/0/0.0 l2transport
```

Creates a VLAN subinterface in Layer 2 transport mode and enters Layer 2 subinterface configuration mode.

**Step 3** **encapsulation dot1q** *vlan-id* [**, untagged** | **,** *vlan-id* | **–***vlan-id*] [**exact** | **ingress source-mac** *mac-address* | **second-dot1q** *vlan-id*]

**Example:**

```
RP/0/RSP0/CPU0:router(config-subif)# encapsulation dot1q 1-20
```

Defines the matching criteria to map 802.1Q frames ingress on an interface to the appropriate service instance.

**Step 4** **end** or **commit**

**Example:**

```
RP/0/RSP0/CPU0:router(config-subif)# commit
```

Saves configuration changes.

- When you issue the **end** command, the system prompts you to commit changes:

```
Uncommitted changes found, commit them before exiting(yes/no/cancel)?
[cancel]:
```

- Entering **yes** saves configuration changes to the running configuration file, exits the configuration session, and returns the router to EXEC mode.
- Entering **no** exits the configuration session and returns the router to EXEC mode without committing the configuration changes.
- Entering **cancel** leaves the router in the current configuration session without exiting or committing the configuration changes.
- Use the **commit** command to save the configuration changes to the running configuration file and remain within the configuration session.

## Configuring a Bridge Group and Assigning EFPs to a Bridge Domain

To configure a bridge group and assign EFPs to a bridge domain to create an EVC, complete the following steps:

### SUMMARY STEPS

1. **configure**
2. **l2vpn**
3. **bridge group** *bridge-group-name*
4. **bridge-domain** *bridge-domain-name*
5. **interface** [**GigabitEthernet | TenGigE**] *interface-path-id***.***subinterface*
6. **end** or **commit**

### DETAILED STEPS

**Step 1** **configure**

**Example:**

```
RP/0/RSP0/CPU0:router# configure
```

Enters global configuration mode.

**Step 2** **l2vpn**

**Example:**

```
RP/0/RSP0/CPU0:router(config)# l2vpn
```

Enters L2VPN configuration mode.

**Step 3** **bridge group** *bridge-group-name*

**Example:**

```
RP/0/RSP0/CPU0:router(config-l2vpn)# bridge group BG1
```

Creates a bridge group and enters L2VPN bridge group configuration mode.

**Step 4** **bridge-domain** *bridge-domain-name*

**Example:**

```
RP/0/RSP0/CPU0:router(config-l2vpn-bg)# bridge-domain BD1
```

Creates a bridge domain and enters L2VPN bridge group bridge domain configuration mode.

**Step 5** **interface** [**GigabitEthernet** | **TenGigE**] *interface-path-id***.***subinterface*

**Example:**

```
RP/0/RSP0/CPU0:router(config-l2vpn-bg-bd)# interface GigabitEthernet 0/0/0/0.0
```

Associates the EFP (EVC) with the specified bridge domain and enters L2VPN bridge group bridge domain attachment circuit configuration mode, where *interface-path-id* is specified as the *rack*/*slot*/*module*/*port* location of the interface and **.***subinterface* is the subinterface number.

Repeat this step for as many EFPs (EVCs) as you want to associate with the bridge domain.

**Step 6** **end** or **commit**

**Example:**

```
RP/0/RSP0/CPU0:router(config-l2vpn-bg-bd-ac)# end
```

or

```
RP/0/RSP0/CPU0:router(config-l2vpn-bg-bd-ac)# commit
```

Saves configuration changes.

- When you issue the **end** command, the system prompts you to commit changes:

```
Uncommitted changes found, commit them before exiting(yes/no/cancel)?
[cancel]:
```

- Entering **yes** saves configuration changes to the running configuration file, exits the configuration session, and returns the router to EXEC mode.
- Entering **no** exits the configuration session and returns the router to EXEC mode without committing the configuration changes.
- Entering **cancel** leaves the router in the current configuration session without exiting or committing the configuration changes.
- Use the **commit** command to save the configuration changes to the running configuration file and remain within the configuration session.

## Configuring Ethernet CFM for E-LMI

The Cisco ASR 9000 Series Router uses Ethernet CFM to monitor EVC status for E-LMI. To use CFM for E-LMI, a CFM maintenance domain and service must be configured on the router and the EFPs must be configured as CFM Up MEPs.

To configure Ethernet CFM for E-LMI, complete the following tasks:

## Configuring Ethernet CFM

The minimum configuration to support E-LMI using Ethernet CFM is to configure a CFM maintenance domain and service on the router. Other CFM options can also be configured.

For more information about the tasks to configure Ethernet CFM, see the Configuring Ethernet CFM.

## Configuring EFPs as CFM Up MEPs

This section describes the minimum tasks required to configure EFPs as CFM MEPs. For more information about configuring CFM MEPs, see the Configuring CFM MEPs.

To configure EFPs as CFM MEPs, complete the following tasks for each E-LMI EFP:

### SUMMARY STEPS

1. **configure**
2. **interface gigabitethernet** *interface-path-id*.*subinterface* **l2transport**
3. **ethernet cfm**
4. **mep domain** *domain-name* **service** *service-name* **mep-id** *id-number*
5. **end** or **commit**

### DETAILED STEPS

**Step 1** **configure**

**Example:**

```
RP/0/RSP0/CPU0:router# configure
```

Enters global configuration mode.

**Step 2** **interface gigabitethernet** *interface-path-id*.*subinterface* **l2transport**

**Example:**

```
RP/0/RSP0/CPU0:router(config)# interface GigabitEthernet0/0/0/0.0 l2transport
```

Enters Layer 2 subinterface configuration mode for the EFP.

**Step 3** **ethernet cfm**

**Example:**

```
RP/0/RSP0/CPU0:router(config-subif)# ethernet cfm
```

Enters Ethernet CFM interface configuration mode.

**Step 4** **mep domain** *domain-name* **service** *service-name* **mep-id** *id-number*

**Example:**

```
RP/0/RSP0/CPU0:router(config-if-cfm)# mep domain GLOBAL service CustomerA mep-id 22
```

Creates a MEP on an interface and enters interface CFM MEP configuration mode.

**Step 5** **end** or **commit**

**Example:**

```
RP/0/RSP0/CPU0:router(config-if-cfm-mep)# commit
```

Saves configuration changes.

- When you issue the **end** command, the system prompts you to commit changes:

```
Uncommitted changes found, commit them before exiting(yes/no/cancel)?
[cancel]:
```

- Entering **yes** saves configuration changes to the running configuration file, exits the configuration session, and returns the router to EXEC mode.
- Entering **no** exits the configuration session and returns the router to EXEC mode without committing the configuration changes.
- Entering **cancel** leaves the router in the current configuration session without exiting or committing the configuration changes.
- Use the **commit** command to save the configuration changes to the running configuration file and remain within the configuration session.

## Configuring UNI Names on the Physical Interface

It is recommended that you configure UNI names on the physical interface links to both the local and remote UNIs to aid in management for the E-LMI protocol. To configure UNI names, complete the following tasks on the physical interface links to both the local and remote UNIs:

## SUMMARY STEPS

1. **configure**
2. **interface [GigabitEthernet | TenGigE]** *interface-path-id*
3. **ethernet uni id** *name*
4. **end** or **commit**

## DETAILED STEPS

**Step 1** **configure**

**Example:**

```
RP/0/RSP0/CPU0:router# configure
```

Enters global configuration mode.

**Step 2** **interface [GigabitEthernet | TenGigE]** *interface-path-id*

**Example:**

```
RP/0/RSP0/CPU0:router(config)# interface gigabitethernet 0/0/0/0
```

Enters interface configuration mode for the physical interface.

**Step 3** **ethernet uni id** *name*

**Example:**

```
RP/0/RSP0/CPU0:router(config-if)# ethernet uni id PE1-CustA-Slot0-Port0
```

Specifies a name (up to 64 characters) for the Ethernet UNI interface link.

**Step 4** **end** or **commit**

**Example:**

```
RP/0/RSP0/CPU0:router(config-if)# commit
```

Saves configuration changes.

- When you issue the **end** command, the system prompts you to commit changes:

  ```
  Uncommitted changes found, commit them before exiting(yes/no/cancel)?
  [cancel]:
  ```

- Entering **yes** saves configuration changes to the running configuration file, exits the configuration session, and returns the router to EXEC mode.
- Entering **no** exits the configuration session and returns the router to EXEC mode without committing the configuration changes.
- Entering **cancel** leaves the router in the current configuration session without exiting or committing the configuration changes.

- Use the **commit** command to save the configuration changes to the running configuration file and remain within the configuration session.

## Enabling E-LMI on the Physical Interface

The Cisco ASR 9000 Series Router supports the E-LMI protocol only on physical Ethernet interfaces. To enable E-LMI, complete the following tasks on the physical Ethernet interface link to the local UNI:

### SUMMARY STEPS

1. **configure**
2. **interface** [**GigabitEthernet** | **TenGigE**] *interface-path-id*
3. **ethernet lmi**
4. **end** or **commit**

### DETAILED STEPS

**Step 1** **configure**

**Example:**

```
RP/0/RSP0/CPU0:router# configure
```

Enters global configuration mode.

**Step 2** **interface** [**GigabitEthernet** | **TenGigE**] *interface-path-id*

**Example:**

```
RP/0/RSP0/CPU0:router# interface gigabitethernet 0/0/0/0
```

Enters interface configuration mode for the physical interface.

**Step 3** **ethernet lmi**

**Example:**

```
RP/0/RSP0/CPU0:router(config-if)# ethernet lmi
```

Enables Ethernet Local Managment Interface operation on an interface and enters interface Ethernet LMI configuration mode.

**Step 4** **end** or **commit**

**Example:**

```
RP/0/RSP0/CPU0:router(config-if-lmi)# commit
```

Saves configuration changes.

- When you issue the **end** command, the system prompts you to commit changes:

```
Uncommitted changes found, commit them before exiting(yes/no/cancel)?
[cancel]:
```

- Entering **yes** saves configuration changes to the running configuration file, exits the configuration session, and returns the router to EXEC mode.
- Entering **no** exits the configuration session and returns the router to EXEC mode without committing the configuration changes.
- Entering **cancel** leaves the router in the current configuration session without exiting or committing the configuration changes.
- Use the **commit** command to save the configuration changes to the running configuration file and remain within the configuration session.

## Configuring the Polling Verification Timer

The MEF T392 Polling Verification Timer (PVT) specifies the allowable time between transmission of a STATUS message and receipt of a STATUS ENQUIRY from the UNI-C before recording an error. The default value is 15 seconds.

To modify the default value or disable the PVT altogether, complete the following tasks:

### SUMMARY STEPS

1. **configure**
2. **interface** [**GigabitEthernet** | **TenGigE**] *interface-path-id*
3. **ethernet lmi**
4. **polling-verification-timer** {*interval* | **disable**}
5. **end** or **commit**

### DETAILED STEPS

**Step 1** **configure**

**Example:**

```
RP/0/RSP0/CPU0:router# configure
```

Enters global configuration mode.

**Step 2** **interface** [**GigabitEthernet** | **TenGigE**] *interface-path-id*

**Example:**

```
RP/0/RSP0/CPU0:router# interface gigabitethernet 0/0/0/0
```

Enters interface configuration mode for the physical interface.

**Step 3** **ethernet lmi**

**Example:**

```
RP/0/RSP0/CPU0:router(config-if)# ethernet lmi
```

Enables Ethernet Local Managment Interface operation on an interface and enters interface Ethernet LMI configuration mode.

**Step 4** **polling-verification-timer** {*interval* | **disable**}

**Example:**

```
RP/0/RSP0/CPU0:router(config-if-lmi)# polling-verification-timer 30
```

Sets or disables the MEF T392 Polling Verification Timer for E-LMI operation, which specifies the allowable time (in seconds) between transmission of a STATUS message and receipt of a STATUS ENQUIRY from the UNI-C before recording an error. The default is 15.

**Step 5** **end** or **commit**

**Example:**

```
RP/0/RSP0/CPU0:router(config-if-lmi)# commit
```

Saves configuration changes.

- When you issue the **end** command, the system prompts you to commit changes:

```
Uncommitted changes found, commit them before exiting(yes/no/cancel)?
[cancel]:
```

- Entering **yes** saves configuration changes to the running configuration file, exits the configuration session, and returns the router to EXEC mode.
- Entering **no** exits the configuration session and returns the router to EXEC mode without committing the configuration changes.
- Entering **cancel** leaves the router in the current configuration session without exiting or committing the configuration changes.
- Use the **commit** command to save the configuration changes to the running configuration file and remain within the configuration session.

## Configuring the Status Counter

The MEF N393 Status Counter value is used to determine E-LMI operational status by tracking receipt of consecutive good packets or successive expiration of the PVT on packets. The default counter is four, which means that while the E-LMI protocol is in Down state, four good packets must be received consecutively to change the protocol state to Up, or while the E-LMI protocol is in Up state, four consecutive PVT expirations must occur before the state of the E-LMI protocol is changed to Down on the interface.

To modify the status counter default value, complete the following tasks:

### SUMMARY STEPS

1. **configure**
2. **interface** [**GigabitEthernet** | **TenGigE**] *interface-path-id*

3. **ethernet lmi**
4. **status-counter** *threshold*
5. **end** or **commit**

## DETAILED STEPS

**Step 1** **configure**

**Example:**

```
RP/0/RSP0/CPU0:router# configure
```

Enters global configuration mode.

**Step 2** **interface** [**GigabitEthernet** | **TenGigE**] *interface-path-id*

**Example:**

```
RP/0/RSP0/CPU0:router# interface gigabitethernet 0/0/0/0
```

Enters interface configuration mode for the physical interface.

**Step 3** **ethernet lmi**

**Example:**

```
RP/0/RSP0/CPU0:router(config-if)# ethernet lmi
```

Enables Ethernet Local Managment Interface operation on an interface and enters interface Ethernet LMI configuration mode.

**Step 4** **status-counter** *threshold*

**Example:**

```
RP/0/RSP0/CPU0:router(config-if-lmi)# status-counter 5
```

Sets the MEF N393 Status Counter value that is used to determine E-LMI operational status by tracking receipt of consecutive good and bad packets from a peer. The default is 4.

**Step 5** **end** or **commit**

**Example:**

```
RP/0/RSP0/CPU0:router(config-if-lmi)# commit
```

Saves configuration changes.

- When you issue the **end** command, the system prompts you to commit changes:

```
Uncommitted changes found, commit them before exiting(yes/no/cancel)?
[cancel]:
```

- Entering **yes** saves configuration changes to the running configuration file, exits the configuration session, and returns the router to EXEC mode.

- Entering **no** exits the configuration session and returns the router to EXEC mode without committing the configuration changes.
- Entering **cancel** leaves the router in the current configuration session without exiting or committing the configuration changes.
- Use the **commit** command to save the configuration changes to the running configuration file and remain within the configuration session.

## Disabling Syslog Messages for E-LMI Errors or Events

The E-LMI protocol tracks certain errors and events whose counts can be displayed using the **show ethernet lmi interfaces** command.

To disable syslog messages for E-LMI errors or events, complete the following tasks:

### SUMMARY STEPS

1. **configure**
2. **interface** [**GigabitEthernet** | **TenGigE**] *interface-path-id*
3. **ethernet lmi**
4. **log** {**errors** | **events**} **disable**
5. **end** or **commit**

### DETAILED STEPS

**Step 1** **configure**

**Example:**

```
RP/0/RSP0/CPU0:router# configure
```

Enters global configuration mode.

**Step 2** **interface** [**GigabitEthernet** | **TenGigE**] *interface-path-id*

**Example:**

```
RP/0/RSP0/CPU0:router# interface gigabitethernet 0/0/0/0
```

Enters interface configuration mode for the physical interface.

**Step 3** **ethernet lmi**

**Example:**

```
RP/0/RSP0/CPU0:router(config-if)# ethernet lmi
```

Enables Ethernet Local Managment Interface operation on an interface and enters interface Ethernet LMI configuration mode.

**Step 4** **log** {**errors** | **events**} **disable**

**Example:**

```
RP/0/RSP0/CPU0:router(config-if-lmi)# log events disable
```

Turns off syslog messages for E-LMI errors or events.

**Step 5** **end** or **commit**

**Example:**

```
RP/0/RSP0/CPU0:router(config-if-lmi)# commit
```

Saves configuration changes.

- When you issue the **end** command, the system prompts you to commit changes:

```
Uncommitted changes found, commit them before exiting(yes/no/cancel)?
[cancel]:
```

- Entering **yes** saves configuration changes to the running configuration file, exits the configuration session, and returns the router to EXEC mode.
- Entering **no** exits the configuration session and returns the router to EXEC mode without committing the configuration changes.
- Entering **cancel** leaves the router in the current configuration session without exiting or committing the configuration changes.
- Use the **commit** command to save the configuration changes to the running configuration file and remain within the configuration session.

## Disabling Use of the Cisco-Proprietary Remote UNI Details Information Element

To provide additional information within the E-LMI protocol, the Cisco IOS XR software implements a Cisco-proprietary information element called Remote UNI Details to send information to the CE about remote UNI names and states. This information element implements what is currently an unused identifier from the E-LMI MEF 16 specification.

To disable use of the Remote UNI Details information element, complete the following tasks:

### SUMMARY STEPS

1. **configure**
2. **interface** [**GigabitEthernet** | **TenGigE**] *interface-path-id*
3. **ethernet lmi**
4. **extension remote-uni disable**
5. **end** or **commit**

### DETAILED STEPS

**Step 1** **configure**

**Example:**

```
RP/0/RSP0/CPU0:router# configure
```

Enters global configuration mode.

**Step 2** **interface** [**GigabitEthernet** | **TenGigE**] *interface-path-id*

**Example:**

```
RP/0/RSP0/CPU0:router# interface gigabitethernet 0/0/0/0
```

Enters interface configuration mode for the physical interface.

**Step 3** **ethernet lmi**

**Example:**

```
RP/0/RSP0/CPU0:router(config-if)# ethernet lmi
```

Enables Ethernet Local Managment Interface operation on an interface and enters interface Ethernet LMI configuration mode.

**Step 4** **extension remote-uni disable**

**Example:**

```
RP/0/RSP0/CPU0:router(config-if-lmi)# extension remote-uni disable
```

Disables transmission of the Cisco-proprietary Remote UNI Details information element in E-LMI STATUS messages.

**Step 5** **end** or **commit**

**Example:**

```
RP/0/RSP0/CPU0:router(config-if-lmi)# commit
```

Saves configuration changes.

- When you issue the **end** command, the system prompts you to commit changes:

  ```
  Uncommitted changes found, commit them before exiting(yes/no/cancel)?
  [cancel]:
  ```

- Entering **yes** saves configuration changes to the running configuration file, exits the configuration session, and returns the router to EXEC mode.
- Entering **no** exits the configuration session and returns the router to EXEC mode without committing the configuration changes.
- Entering **cancel** leaves the router in the current configuration session without exiting or committing the configuration changes.
- Use the **commit** command to save the configuration changes to the running configuration file and remain within the configuration session.

## Verifying the Ethernet LMI Configuration

Use the **show ethernet lmi interfaces detail** command to display the values for the Ethernet LMI configuration for a particular interface, or for all interfaces. The following example shows sample output for the command:

```
RP/0/RSP0/CPU0:router# show ethernet lmi interfaces detail
Interface: GigabitEthernet0/0/0/0
  Ether LMI Link Status: Up
  UNI Id: PE1-CustA-Slot0-Port0
  Line Protocol State: Up
  MTU: 1514 (1 PDU reqd. for full report)
  CE-VLAN/EVC Map Type: Bundling (1 EVC)
  Configuration: Status counter 4, Polling Verification Timer 15 seconds
  Last Data Instance Sent: 0
  Last Sequence Numbers: Sent 0, Received 0

  Reliability Errors:
    Status Enq Timeouts                  0 Invalid Sequence Number             0
    Invalid Report Type                  0

  Protocol Errors:
    Malformed PDUs                       0 Invalid Procotol Version            0
    Invalid Message Type                 0 Out of Sequence IE                  0
    Duplicated IE                        0 Mandatory IE Missing                0
    Invalid Mandatory IE                 0 Invalid non-Mandatory IE            0
    Unrecognized IE                      0 Unexpected IE                       0

  Full Status Enq Received     never       Full Status Sent         never
  PDU Received                 never       PDU Sent                 never
  LMI Link Status Changed   00:00:03 ago   Last Protocol Error      never
  Counters cleared             never

  Sub-interface: GigabitEthernet0/0/0/0.0
    VLANs: 1-20
    EVC Status: Active
    EVC Type: Point-to-Point
    OAM Protocol: CFM
      CFM Domain: Global (level 5)
      CFM Service: CustomerA
    Remote UNI Count: Configured = 1, Active = 1

    Remote UNI Id                                                Status
    -------------                                                ------
    PE1-CustA-Slot0-Port1                                        Up
```

## Troubleshooting Tips for E-LMI Configuration

This section describes some basic information for troubleshooting your E-LMI configuration in the following topics:

## Ethernet LMI Link Status Troubleshooting

The E-LMI protocol operational status is reported in the “Ether LMI Link Status” or “ELMI state” fields in the output of forms of the **show ethernet lmi interfaces** command. To investigate a link status other than “Up,” consider the following guidelines:

- Unknown (PVT disabled)—Indicates that the Polling Verification Timer has been configured as disabled, so no status information can be provided. To see an “Up” or “Down” status, you must enable the PVT. For more information, see the Configuring the Polling Verification Timer.

- Down—The E-LMI link status can be Down for the following reasons:
  - The PVT has timed out the number of times specified by the **status-counter** command. This indicates that STATUS ENQUIRY messages have not been received from the CE device. This can be for the following reasons:

    — The CE device is not connected to the PE device. Check that the CE device is connected to the interface on which E-LMI is enabled on the PE device.

    — The CE device is not sending Status Enquiries. Check that E-LMI is enabled on the CE interface which is connected to the PE device.

    — Protocol errors are causing the PVT to expire. The PVT is only reset when a valid (unerrored) STATUS ENQUIRY message is received.
  - The Line Protocol State is “Down” or “Admin Down.”
  - The protocol has not yet started on the interface because it does not have useful information to provide, such as the UNI Id or details about EVCs. This is a symptom of provisioning misconfiguration.

**Note** If the protocol is started, then E-LMI still responds to STATUS ENQUIRY messages when it is in “Down” state.

## Ethernet LMI Line Protocol State Troubleshooting

The E-LMI line protocol state is reported in the “Line Protocol State” or “LineP State” fields in the output of forms of the **show ethernet lmi interfaces** command. The line protocol state is the state of the E-LMI protocol on the physical interface.

To investigate a line protocol state other than Up, consider the following guidelines:

- Admin-Down—The interface is configured with the **shutdown** command. Use the **no shutdown** command to bring the interface up.
- Down—Indicates a fault on the interface. Run the **show interfaces** command to display both the interface state and the interface line protocol state for more information, and take the following actions to investigate further:
  - If both states are Down, this suggests a physical problem with the link (for example, the cable is not plugged into either the PE or CE device).
  - If the interface state is Up but the line protocol state is Down, this suggests that an OAM protocol has brought the line protocol state down due to a fault. Use the **show efd interface** command for more information.

## Ethernet LMI Error Counter Troubleshooting

The **show ethernet lmi interfaces** command displays two sections of error counters:

- Reliability Errors—Can indicate that messages are being lost between the PE and CE devices. The timers in the last block of the output should indicate that messages are being sent and received by the PE device.

- Protocol Errors—Indicates that the CE device is sending packets to the PE device, but the PE does not understand those packets. This suggests an incorrect configuration of the E-LMI protocol on the CE side, or corruption of the packets on the path between the CE and PE. E-LMI packets have a strictly defined structure in the MEF 16 standard, and any deviation from that results in a protocol error. The PE will not respond to any packets that are malformed and result in a protocol error.

Immediately after configuring E-LMI, all of the error counters should be zero, with the possible exception of the Status Enq Timeouts counter. The Status Enq Timeouts counter can be non-zero if the E-LMI protocol was started on the PE interface before being started on the corresponding CE interface. However, once the protocol is started on both devices, this counter should stop increasing.

If the Status Enq Timeouts counter is non-zero and is increasing, this indicates that enquiries are not being received from the CE device. This can be due to the following conditions:

- The CE device is not connected or not sending STATUS ENQUIRY messages. For more information, see also the Ethernet LMI Link Status Troubleshooting.
- The Polling Timer on the CE device is configured to a value greater than the PVT on the PE device. Verify that the value of the **polling-verification-timer** command on the PE device is larger than the value of the CE's Polling Timer.

For more information, see also the documentation for the show ethernet lmi interfaces command in the *Cisco ASR 9000 Aggregation Services Router Interfaces and Hardware Component Command Reference*.

## Ethernet LMI Remote UNI Troubleshooting

Information about the Remote UNIs is reported in the output of the **show ethernet lmi interfaces detail** command. The Remote UNI ID field displays the name of the UNI as configured by the **ethernet uni id** command, or it displays the CFM MEP ID of the UNI when the UNI name has not been configured.

If the Remote UNI is missing from the table altogether, this is can be due to the following conditions:

- The remote UNI's EFP is missing from the bridge-domain in L2VPN configuration. Use the **show ethernet cfm configuration-errors** command to verify the configuration.
- A CFM MEP has not been configured on the remote UNI's EFP.

# Configuring UDLD

UDLD is configured for each interface. The interface must be a physical ethernet interface.

Perform these steps to configure UDLD protocol on an interface.

### SUMMARY STEPS

1. **configure**
2. **interface** [**GigabitEthernet** | **TenGigE**] *interface-path-id*
3. **ethernet udld**
4. **mode {normal |aggressive}**
5. **message-time** *[7-90]*
6. **logging disable**
7. **end**

## DETAILED STEPS

**Step 1** **configure**

**Example:**

```
RP/0/RSP0/CPU0:router# configure
```

Enters global configuration mode.

**Step 2** **interface** [**GigabitEthernet | TenGigE**] *interface-path-id*

**Example:**

```
RP/0/RSP0/CPU0:router(config)# interface
TenGigE 0/1/0/0
```

Enters interface configuration mode and specifies the Ethernet interface name and notation *rack/slot/module/port*.

**Note** • The example indicates an 8-port 10-Gigabit Ethernet interface in modular services card slot 1.

**Step 3** **ethernet udld**

**Example:**

```
RP/0/RSP0/CPU0:router(config-if)# ethernet udld
```

Enables ethernet UDLD function and enters interface Ethernet UDLD configuration mode.

**Step 4** **mode {normal |aggressive}**

**Example:**

```
RP/0/RSP0/CPU0:router(config-if-udld)# mode normal
```

(Optional) Specifies the mode of operation for UDLD. The options are normal and aggressive.

**Step 5** **message-time** *[7-90]*

**Example:**

```
RP/0/RSP0/CPU0:router(config-if-udld)# message-time 70
```

(Optional) Specifies the message time (in seconds) to use for the UDLD protocol. The value ranges between 7 to 90 seconds.

**Step 6** **logging disable**

**Example:**

```
RP/0/RSP0/CPU0:router(config-if-udld)# loggig disable
```

(Optional) This command suppresses the operational UDLD syslog messages.

**Step 7** **end**

**Example:**

```
RP/0/RSP0/CPU0:router(config-if-udld)# end
```

Ends the configuration session and exits to the EXEC mode.

# Configuration Examples for Ethernet OAM

This section provides the following configuration examples:

## Configuration Examples for EOAM Interfaces

This section provides the following configuration examples:

### Configuring an Ethernet OAM Profile Globally: Example

This example shows how to configure an Ethernet OAM profile globally:

```
configure terminal
 ethernet oam profile Profile_1
  link-monitor
   symbol-period window 60000
   symbol-period threshold low 10000000 high 60000000
   frame window 60
   frame threshold low 10000000 high 60000000
   frame-period window 60000
   frame-period threshold low 100 high 12000000
   frame-seconds window 900000
   frame-seconds threshold 3 threshold 900
   exit
  mib-retrieval
  connection timeout 30
  require-remote mode active
  require-remote link-monitoring
  require-remote mib-retrieval
  action dying-gasp error-disable-interface
  action critical-event error-disable-interface
  action discovery-timeout error-disable-interface
  action session-down error-disable-interface
  action capabilities-conflict error-disable-interface
  action wiring-conflict error-disable-interface
  action remote-loopback error-disable-interface
  commit
```

### Configuring Ethernet OAM Features on an Individual Interface: Example

This example shows how to configure Ethernet OAM features on an individual interface:

```
configure terminal
 interface TenGigE 0/1/0/0
  ethernet oam
   link-monitor
    symbol-period window 60000
    symbol-period threshold low 10000000 high 60000000
    frame window 60
```

```
    frame threshold low 10000000 high 60000000
    frame-period window 60000
    frame-period threshold low 100 high 12000000
    frame-seconds window 900000
    frame-seconds threshold 3 threshold 900
    exit
   mib-retrieval
   connection timeout 30
   require-remote mode active
   require-remote link-monitoring
   require-remote mib-retrieval
   action link-fault  error-disable-interface
   action dying-gasp error-disable-interface
   action critical-event error-disable-interface
   action discovery-timeout error-disable-interface
   action session-down error-disable-interface
   action capabilities-conflict error-disable-interface
   action wiring-conflict error-disable-interface
   action remote-loopback error-disable-interface
   commit
```

## Configuring Ethernet OAM Features to Override the Profile on an Individual Interface: Example

This example shows the configuration of Ethernet OAM features in a profile followed by an override of that configuration on an interface:

```
configure terminal
 ethernet oam profile Profile_1
  mode passive
  action dying-gasp disable
  action critical-event disable
  action discovery-timeout disable
  action session-up disable
  action session-down disable
  action capabilities-conflict disable
  action wiring-conflict disable
  action remote-loopback disable
  action uni-directional link-fault error-disable-interface
  commit

configure terminal
 interface TenGigE 0/1/0/0
  ethernet oam
   profile Profile_1
    mode active
    action dying-gasp log
    action critical-event log
    action discovery-timeout log
    action session-up log
    action session-down log
    action capabilities-conflict log
    action wiring-conflict log
    action remote-loopback log
    action uni-directional link-fault log
    uni-directional link-fault detection
    commit
```

## Configuring a Remote Loopback on an Ethernet OAM Peer: Example

This example shows how to configure a remote loopback on an Ethernet OAM peer:

```
configure terminal
 interface gigabitethernet 0/1/5/6
  ethernet oam
   profile Profile_1
   remote-loopback
```

This example shows how to start a remote loopback on a configured Ethernet OAM interface:

```
ethernet oam loopback enable TenGigE 0/6/1/0
```

## Clearing Ethernet OAM Statistics on an Interface: Example

This example shows how to clear Ethernet OAM statistics on an interface:

```
RP/0/RP0/CPU0:router# clear ethernet oam statistics interface gigabitethernet 0/1/5/1
```

## Enabling SNMP Server Traps on a Router: Example

This example shows how to enable SNMP server traps on a router:

```
configure terminal
  ethernet oam profile Profile_1
  snmp-server traps ethernet oam events
```

# Configuration Examples for Ethernet CFM

This section includes the following examples:

## Ethernet CFM Domain Configuration: Example

This example shows how to configure a basic domain for Ethernet CFM:

```
configure
 ethernet cfm
  traceroute cache hold-time 1 size 3000
  domain Domain_One level 1 id string D1
  commit
```

## Ethernet CFM Service Configuration: Example

This example shows how to create a service for an Ethernet CFM domain:

```
  service Bridge_Service bridge group BD1 bridge-domain B1
  service Cross_Connect_1 xconnect group XG1 p2p X1
  commit
```

## Flexible Tagging for an Ethernet CFM Service Configuration: Example

This example shows how to set the number of tags in CFM packets from up MEPs in a CFM domain service:

```
configure
 ethernet cfm
  domain D1 level 1
   service S2 bridge group BG1 bridge-domain BD2
```

```
 tags 1
 commit
```

## Continuity Check for an Ethernet CFM Service Configuration: Example

This example shows how to configure continuity-check options for an Ethernet CFM service:

```
continuity-check archive hold-time 100
continuity-check loss auto-traceroute
continuity-check interval 100ms loss-threshold 10
commit
```

## MIP Creation for an Ethernet CFM Service Configuration: Example

This example shows how to enable MIP auto-creation for an Ethernet CFM service:

```
RP/0/RSP0/CPU0:router(config-cfm-dmn-svc)# mip auto-create all
RP/0/RSP0/CPU0:router(config-cfm-dmn-svc)# commit
```

## Cross-check for an Ethernet CFM Service Configuration: Example

This example shows how to configure cross-check for MEPs in an Ethernet CFM service:

```
mep crosscheck
 mep-id 10
 mep-id 20
 commit
```

## Other Ethernet CFM Service Parameter Configuration: Example

This example shows how to configure other Ethernet CFM service options:

```
 maximum-meps 4000
 log continuity-check errors
 commit
 exit
exit
exit
```

## MEP Configuration: Example

This example shows how to configure a MEP for Ethernet CFM on an interface:

```
interface gigabitethernet 0/1/0/1
 ethernet cfm
 mep domain Dm1 service Sv1 mep-id 1
 commit
```

## Ethernet CFM Show Command: Examples

These examples show how to verify the configuration of Ethernet Connectivity Fault Management (CFM):

### Example 1

This example shows how to display all the maintenance points that have been created on an interface:

```
RP/0/RSP0/CPU0:router# show ethernet cfm local maintenance-points

Domain/Level         Service              Interface         Type   ID   MAC
-------------------- -------------------- ----------------- ------ ---- --------
fig/5                bay                  Gi0/10/0/12.23456 Dn MEP    2 44:55:66
fig/5                bay                  Gi0/0/1/0.1       MIP         55:66:77
fred/3               barney               Gi0/1/0/0.1       Up MEP    5 66:77:88!
```

### Example 2

This example shows how to display all the CFM configuration errors on all domains:

```
RP/0/RSP0/CPU0:router# show ethernet cfm configuration-errors

Domain fig (level 5), Service bay
* MIP creation configured using bridge-domain blort, but bridge-domain blort does not exist.

 * An Up MEP is configured for this domain on interface GigabitEthernet0/1/2/3.234 and an
Up MEP is also configured for domain blort, which is at the same level (5).
 * A MEP is configured on interface GigabitEthernet0/3/2/1.1 for this domain/service, which
 has CC interval 100ms, but the lowest interval supported on that interface is 1s
```

### Example 3

This example shows how to display operational state for local maintenance end points (MEPs):

```
RP/0/RSP0/CPU0:router# show ethernet cfm local meps

 A - AIS received                I - Wrong interval
 R - Remote Defect received      V - Wrong Level
 L - Loop (our MAC received)     T - Timed out (archived)
 C - Config (our ID received)    M - Missing (cross-check)
 X - Cross-connect (wrong MAID)  U - Unexpected (cross-check)
 P - Peer port down

Domain foo (level 6), Service bar
   ID Interface (State)        Dir MEPs/Err RD Defects AIS
----- ------------------------ --- -------- -- ------- ---
  100 Gi1/1/0/1.234 (Up)       Up     0/0   N  A       L7

Domain fred (level 5), Service barney
   ID Interface (State)        Dir MEPs/Err RD Defects AIS
----- ------------------------ --- -------- -- ------- ---
    2 Gi0/1/0/0.234 (Up)       Up     3/2   Y  RPC     L6
Domain foo (level 6), Service bar
   ID Interface (State)        Dir MEPs/Err RD Defects AIS
----- ------------------------ --- -------- -- ------- ---
  100 Gi1/1/0/1.234 (Up)       Up     0/0   N  A

Domain fred (level 5), Service barney
   ID Interface (State)        Dir MEPs/Err RD Defects AIS
----- ------------------------ --- -------- -- ------- ---
    2 Gi0/1/0/0.234 (Up)       Up     3/2   Y  RPC
```

### Example 4

This example shows how to display operational state of other maintenance end points (MEPs) detected by a local MEP:

```
RP/0/RSP0/CPU0:router# show ethernet cfm peer meps

Flags:
 > - Ok                           I - Wrong interval
 R - Remote Defect received       V - Wrong level
 L - Loop (our MAC received)      T - Timed out
 C - Config (our ID received)     M - Missing (cross-check)
 X - Cross-connect (wrong MAID)   U - Unexpected (cross-check)

Domain fred (level 7), Service barney
Up MEP on GigabitEthernet0/1/0/0.234, MEP-ID 2
================================================================================
St    ID MAC address    Port    Up/Downtime   CcmRcvd SeqErr   RDI Error
-- ----- -------------- ------- ----------- --------- ------ ----- -----
 >     1 0011.2233.4455 Up      00:00:01         1234      0     0     0
R>     4 4455.6677.8899 Up      1d 03:04         3456      0   234     0
L      2 1122.3344.5566 Up      3w 1d 6h         3254      0     0  3254
C      2 7788.9900.1122 Test    00:13            2345      6    20  2345
X      3 2233.4455.6677 Up      00:23              30      0     0    30
I      3 3344.5566.7788 Down    00:34           12345      0   300  1234
V      3 8899.0011.2233 Blocked 00:35              45      0     0    45
 T     5 5566.7788.9900         00:56              20      0     0     0
M      6                                           0      0     0     0
U>     7 6677.8899.0011 Up      00:02             456      0     0     0

Domain fred (level 7), Service fig
Down MEP on GigabitEthernet0/10/0/12.123, MEP-ID 3
================================================================================
St    ID MAC address    Port    Up/Downtime  CcmRcvd SeqErr   RDI Error
-- ----- -------------- ------- ----------- -------- ------ ----- -----
 >     1 9900.1122.3344 Up      03:45           4321      0     0     0
```

### Example 5

This example shows how to display operational state of other maintenance end points (MEPs) detected by a local MEP with details:

```
RP/0/RSP0/CPU0:router#  show ethernet cfm peer meps detail
Domain dom3 (level 5), Service ser3
Down MEP on GigabitEthernet0/0/0/0 MEP-ID 1
================================================================================
Peer MEP-ID 10, MAC 0001.0203.0403
   CFM state: Wrong level, for 00:01:34
   Port state: Up
   CCM defects detected:    V - Wrong Level
   CCMs received: 5
     Out-of-sequence:             0
     Remote Defect received:      5
     Wrong Level:                 0
     Cross-connect (wrong MAID):  0
     Wrong Interval:              5
     Loop (our MAC received):     0
     Config (our ID received):    0
Last CCM received 00:00:06 ago:
     Level: 4, Version: 0, Interval: 1min
     Sequence number: 5, MEP-ID: 10
     MAID: String: dom3, String: ser3
     Port status: Up, Interface status: Up


Domain dom4 (level 2), Service ser4
Down MEP on GigabitEthernet0/0/0/0 MEP-ID 1
```

```
================================================================================
Peer MEP-ID 20, MAC 0001.0203.0402
   CFM state: Ok, for 00:00:04
   Port state: Up
   CCMs received: 7
     Out-of-sequence:             1
     Remote Defect received:      0
     Wrong Level:                 0
     Cross-connect (wrong MAID):  0
     Wrong Interval:              0
     Loop (our MAC received):     0
  Config (our ID received):    0
Last CCM received 00:00:04 ago:
     Level: 2, Version: 0, Interval: 10s
     Sequence number: 1, MEP-ID: 20
     MAID: String: dom4, String: ser4
     Chassis ID: Local: ios; Management address: 'Not specified'
     Port status: Up, Interface status: Up

Peer MEP-ID 21, MAC 0001.0203.0403
   CFM state: Ok, for 00:00:05
   Port state: Up
   CCMs received: 6
     Out-of-sequence:             0
     Remote Defect received:      0
     Wrong Level:                 0
     Cross-connect (wrong MAID):  0
     Wrong Interval:              0
     Loop (our MAC received):     0
     Config (our ID received):    0
Last CCM received 00:00:05 ago:
     Level: 2, Version: 0, Interval: 10s
     Sequence number: 1, MEP-ID: 21
     MAID: String: dom4, String: ser4
     Port status: Up, Interface status: Up


Domain dom5 (level 2), Service ser5
Up MEP on Standby Bundle-Ether 1 MEP-ID 1
================================================================================
Peer MEP-ID 600, MAC 0001.0203.0401
   CFM state: Ok (Standby), for 00:00:08, RDI received
   Port state: Down
   CCM defects detected:    Defects below ignored on local standby MEP
                            I - Wrong Interval
                            R - Remote Defect received
   CCMs received: 5
     Out-of-sequence:             0
     Remote Defect received:    5
  Wrong Level:                 0
     Cross-connect W(wrong MAID): 0
     Wrong Interval:              5
     Loop (our MAC received):     0
     Config (our ID received):    0
   Last CCM received 00:00:08 ago:
     Level: 2, Version: 0, Interval: 10s
     Sequence number: 1, MEP-ID: 600
     MAID: DNS-like: dom5, String: ser5
     Chassis ID: Local: ios; Management address: 'Not specified'
     Port status: Up, Interface status: Down

Peer MEP-ID 601, MAC 0001.0203.0402
   CFM state: Timed Out (Standby), for 00:15:14, RDI received
   Port state: Down
```

```
CCM defects detected:    Defects below ignored on local standby MEP
                         I - Wrong Interval
                         R - Remote Defect received
                         T - Timed Out
                         P - Peer port down
CCMs received: 2
  Out-of-sequence:             0
  Remote Defect received:      2
  Wrong Level:                 0
  Cross-connect (wrong MAID):  0
  Wrong Interval:              2
  Loop (our MAC received):     0
  Config (our ID received):    0
Last CCM received 00:15:49 ago:
  Level: 2, Version: 0, Interval: 10s
  Sequence number: 1, MEP-ID: 600
  MAID: DNS-like: dom5, String: ser5
  Chassis ID: Local: ios; Management address: 'Not specified'
  Port status: Up, Interface status: Down
```

## AIS for CFM Configuration: Examples

### Example 1

This example shows how to configure Alarm Indication Signal (AIS) transmission for a CFM domain service:

```
RP/0/RSP0/CPU0:router# configure
RP/0/RSP0/CPU0:router(config)# ethernet cfm
RP/0/RSP0/CPU0:router(config-cfm)# domain D1 level 1
RP/0/RSP0/CPU0:router(config-cfm-dmn)# service S1 bridge group BG1 bridge-domain BD2
RP/0/RSP0/CPU0:router(config-cfm-dmn-svc)# ais transmission interval 1m cos 7

configure
RP/0//CPU0:router(config)# ethernet cfm
RP/0//CPU0:router(config-cfm)# domain D1 level 1
RP/0//CPU0:router(config-cfm-dmn)# service Cross_Connect_1 xconnect group XG1 p2p
RP/0//CPU0:router(config-cfm-dmn-svc)# ais transmission interval 1m cos 7
```

### Example 2

This example shows how to configure AIS logging for a Connectivity Fault Management (CFM) domain service to indicate when AIS or LCK packets are received:

```
RP/0/RSP0/CPU0:router# configure
RP/0/RSP0/CPU0:router(config)# ethernet cfm
RP/0/RSP0/CPU0:router(config-cfm)# domain D1 level 1
RP/0/RSP0/CPU0:router(config-cfm-dmn)# service S2 bridge group BG1 bridge-domain BD2
RP/0/RSP0/CPU0:router(config-cfm-dmn-svc)# log ais

configure
RP/0//CPU0:router(config)# ethernet cfm
RP/0//CPU0:router(config-cfm)# domain D1 level 1
RP/0//CPU0:router(config-cfm-dmn)# service Cross_Connect_1 xconnect group XG1 p2p
RP/0//CPU0:router(config-cfm-dmn-svc)# log ais
```

This example shows how to configure AIS transmission on a CFM interface.

```
RP/0/RSP0/CPU0:router# configure
RP/0/RSP0/CPU0:router(config)# interface gigabitethernet 0/1/0/2
```

```
RP/0/RSP0/CPU0:router(config-if)# ethernet cfm
RP/0/0RP0RSP0/CPU0:router(config-if-cfm)# ais transmission up interval 1m cos 7
```

## AIS for CFM Show Commands: Examples

This section includes the following examples:

## show ethernet cfm interfaces ais Command: Example

This example shows how to display the information published in the Interface AIS table:

```
RP/0/RSP0/CPU0:router# show ethernet cfm interfaces ais

Defects (from at least one peer MEP):
 A - AIS received                I - Wrong interval
 R - Remote Defect received      V - Wrong Level
 L - Loop (our MAC received)     T - Timed out (archived)
 C - Config (our ID received)    M - Missing (cross-check)
 X - Cross-connect (wrong MAID)  U - Unexpected (cross-check)
 P - Peer port down              D - Local port down

                              Trigger                   Transmission
                        AIS  ---------    Via    ---------------------------
Interface (State)       Dir  L Defects  Levels   L Int Last started  Packets
------------------------ ---  - -------  -------  - --- ------------ --------
Gi0/1/0/0.234 (Up)      Dn   5 RPC      6        7 1s  01:32:56 ago     5576
Gi0/1/0/0.567 (Up)      Up   0 M        2,3      5 1s  00:16:23 ago      983
Gi0/1/0/1.1 (Dn)        Up     D                 7 60s 01:02:44 ago     3764
Gi0/1/0/2 (Up)          Dn   0 RX       1!
```

## show ethernet cfm local meps Command: Examples

### Example 1: Default

The following example shows how to display statistics for local maintenance end points (MEPs):

```
RP/0/RSP0/CPU0:router# show ethernet cfm local meps

 A - AIS received                I - Wrong interval
 R - Remote Defect received      V - Wrong Level
 L - Loop (our MAC received)     T - Timed out (archived)
 C - Config (our ID received)    M - Missing (cross-check)
 X - Cross-connect (wrong MAID)  U - Unexpected (cross-check)
 P - Peer port down

Domain foo (level 6), Service bar
   ID Interface (State)        Dir MEPs/Err RD Defects AIS
----- ------------------------ --- -------- -- ------- ---
  100 Gi1/1/0/1.234 (Up)       Up     0/0   N  A       7

Domain fred (level 5), Service barney
   ID Interface (State)        Dir MEPs/Err RD Defects AIS
----- ------------------------ --- -------- -- ------- ---
    2 Gi0/1/0/0.234 (Up)       Up     3/2   Y  RPC     6
```

### Example 2: Domain Service

The following example shows how to display statistics for MEPs in a domain service:

```
RP/0/RSP0RP0/CPU0:router# show ethernet cfm local meps domain foo service bar detail

Domain foo (level 6), Service bar
Up MEP on GigabitEthernet0/1/0/0.234, MEP-ID 100
================================================================================
  Interface state: Up      MAC address: 1122.3344.5566
  Peer MEPs: 0 up, 0 with errors, 0 timed out (archived)

  CCM generation enabled:  No
  AIS generation enabled:  Yes (level: 7, interval: 1s)
  Sending AIS:             Yes (started 01:32:56 ago)
  Receiving AIS:           Yes (from lower MEP, started 01:32:56 ago)

Domain fred (level 5), Service barney
Up MEP on GigabitEthernet0/1/0/0.234, MEP-ID 2
================================================================================
  Interface state: Up      MAC address: 1122.3344.5566
  Peer MEPs: 3 up, 2 with errors, 0 timed out (archived)
  Cross-check defects: 0 missing, 0 unexpected

  CCM generation enabled:  Yes (Remote Defect detected: Yes)
  CCM defects detected:    R - Remote Defect received
                           P - Peer port down
                           C - Config (our ID received)
  AIS generation enabled:  Yes (level: 6, interval: 1s)
  Sending AIS:             Yes (to higher MEP, started 01:32:56 ago)
  Receiving AIS:           No
```

### Example 3: Verbose

The following example shows how to display verbose statistics for MEPs in a domain service:

**Note** The Discarded CCMs field is not displayed when the number is zero (0). It is unusual for the count of discarded CCMs to be any thing other than zero, since CCMs are only discarded when the limit on the number of peer MEPs is reached.

```
RP/0/RSP0RP0/CPU0:router# show ethernet cfm local meps domain foo service bar verbose

Domain foo (level 6), Service bar
Up MEP on GigabitEthernet0/1/0/0.234, MEP-ID 100
================================================================================
  Interface state: Up      MAC address: 1122.3344.5566
  Peer MEPs: 0 up, 0 with errors, 0 timed out (archived)

  CCM generation enabled:  No
  AIS generation enabled:  Yes (level: 7, interval: 1s)
  Sending AIS:             Yes (started 01:32:56 ago)
  Receiving AIS:           Yes (from lower MEP, started 01:32:56 ago)

  Packet        Sent      Received
  ------  ----------  ----------------------------------------------------
  CCM             20            20  (out of seq: 0)
  AIS           5576            0

Domain fred (level 5), Service barney
Up MEP on GigabitEthernet0/1/0/0.234, MEP-ID 2
================================================================================
  Interface state: Up      MAC address: 1122.3344.5566
```

```
  Peer MEPs: 3 up, 2 with errors, 0 timed out (archived)
  Cross-check defects: 0 missing, 0 unexpected

  CCM generation enabled:  Yes (Remote Defect detected: Yes)
  CCM defects detected:    R - Remote Defect received
                           P - Peer port down
                           C - Config (our ID received)
  AIS generation enabled:  Yes (level: 6, interval: 1s)
  Sending AIS:             Yes (to higher MEP, started 01:32:56 ago)
  Receiving AIS:           No

  Packet        Sent      Received
  ------  ----------  ------------------------------------------------------------
  CCM          12345         67890  (out of seq: 6, discarded: 10)
  LBM              5             0
  LBR              0             5  (out of seq: 0, with bad data: 0)
  AIS              0         46910
  LCK              -             0
```

### Example 4: Detail

The following example shows how to display detailed statistics for MEPs in a domain service:

```
RP/0/RSP0/CPU0:router# show ethernet cfm local meps detail

Domain foo (level 6), Service bar
Up MEP on GigabitEthernet0/1/0/0.234, MEP-ID 100
================================================================================
  Interface state: Up      MAC address: 1122.3344.5566
  Peer MEPs: 0 up, 0 with errors, 0 timed out (archived)

  CCM generation enabled:  No
  AIS generation enabled:  Yes (level: 7, interval: 1s)
  Sending AIS:             Yes (started 01:32:56 ago)
  Receiving AIS:           Yes (from lower MEP, started 01:32:56 ago)

Domain fred (level 5), Service barney
Up MEP on GigabitEthernet0/1/0/0.234, MEP-ID 2
================================================================================
  Interface state: Up      MAC address: 1122.3344.5566
  Peer MEPs: 3 up, 2 with errors, 0 timed out (archived)
  Cross-check defects: 0 missing, 0 unexpected

  CCM generation enabled:  Yes (Remote Defect detected: Yes)
  CCM defects detected:    R - Remote Defect received
                           P - Peer port down
                           C - Config (our ID received)
  AIS generation enabled:  Yes (level: 6, interval: 1s)
  Sending AIS:             Yes (to higher MEP, started 01:32:56 ago)
  Receiving AIS:           No
```

## EFD Configuration: Examples

This example shows how to enable EFD:

```
RP/0/RSP0/CPU0:router# configure
RP/0/RSP0/CPU0:router(config)# ethernet cfm
RP/0/RSP0/CPU0:router(config-cfm)# domain D1 level 1
RP/0/RSP0/CPU0:router(config-cfm-dmn)# service S1 down-meps
RP/0/RSP0/CPU0:router(config-cfm-dmn-svc)# efd
```

This example shows how to enable EFD logging:

```
RP/0/RSP0/CPU0:router# configure
RP/0/RSP0/CPU0:router(config)# ethernet cfm
RP/0/RSP0/CPU0:router(config-cfm)# domain D1 level 1
RP/0/RSP0/CPU0:router(config-cfm-dmn)# service S1 down-meps
RP/0/RSP0/CPU0:router(config-cfm-dmn-svc)# log efd
```

## Displaying EFD Information: Examples

The following examples show how to display information about EFD:

## show efd interfaces Command: Example

This example shows how to display all interfaces that are shut down in response to an EFD action:

```
RP/0/RSP0/CPU0:router# show efd interfaces

Server VLAN MA
==============
Interface         Clients
-------------------------
GigE0/0/0/0.0     CFM
```

## show ethernet cfm local meps detail Command: Example

Use the **show ethernet cfm local meps detail** command to display MEP-related EFD status information. The following example shows that EFD is triggered for MEP-ID 100:

```
RP/0/RSP0/CPU0:router# show ethernet cfm local meps detail

Domain foo (level 6), Service bar
Up MEP on GigabitEthernet0/1/0/0.234, MEP-ID 100
================================================================================
  Interface state: Up      MAC address: 1122.3344.5566
  Peer MEPs: 0 up, 0 with errors, 0 timed out (archived)
  Cross-check errors: 2 missing, 0 unexpected

  CCM generation enabled:  No
  AIS generation enabled:  Yes (level: 7, interval: 1s)
  Sending AIS:             Yes (started 01:32:56 ago)
  Receiving AIS:           Yes (from lower MEP, started 01:32:56 ago)
  EFD triggered:           Yes

Domain fred (level 5), Service barney
Up MEP on GigabitEthernet0/1/0/0.234, MEP-ID 2
================================================================================
  Interface state: Up      MAC address: 1122.3344.5566
  Peer MEPs: 3 up, 0 with errors, 0 timed out (archived)
  Cross-check errors: 0 missing, 0 unexpected

  CCM generation enabled:  Yes (Remote Defect detected: No)
  AIS generation enabled:  Yes (level: 6, interval: 1s)
  Sending AIS:             No
  Receiving AIS:           No
  EFD triggered:           No
```

**Note** You can also verify that EFD has been triggered on an interface using the **show interfaces** and **show interfaces brief** commands. When an EFD trigger has occurred, these commands will show the interface status as *up* and the line protocol state as *down*.

# Configuration Examples for Ethernet SLA

This section includes the following examples:

## Ethernet SLA Profile Type Configuration: Examples

These examples show how to configure the different profile types supported by Ethernet SLA.

### Example 1

This example configures a profile named "Prof1" for CFM loopback measurements:

```
configure
 ethernet sla
  profile  Prof1 type cfm-loopback
   commit
```

### Example 2

This example configures a profile named "Prof1" for CFM delay measurements. Setting this type allows you to configure the probe to measure additional one-way delay and jitter statistics:

```
configure
 ethernet sla
  profile  Prof1 type cfm-delay-measurement
   commit
```

## Ethernet SLA Probe Configuration: Examples

These examples show how to configure some of the packet options for an Ethernet CFM loopback probe.

### Example 1

This example shows how to configure sending a group of 100 packets in 100 ms intervals and repeat that burst every 60 seconds. Packets are padded to a size of 9000 bytes as needed using a hexadecimal test pattern of "abcdabcd," and with a class of service value of 7:

**Note** The total length of a burst (packet count multiplied by the interval) must not exceed 1 minute.

```
configure
 ethernet sla
  profile  Prof1 type cfm-loopback
   probe
    send burst every 60 seconds packet count 100 interval 100 milliseconds
```

```
    packet size 9000 test pattern hex 0xabcdabcd
    priority 7
    commit
```

### Example 2

This example has the same characteristics as the configuration in Example 1, but sends a single burst of 50 packets, one second apart:

```
configure
 ethernet sla
  profile  Prof1 type cfm-loopback
   probe
    send burst once packet count 50 interval 1 second
    packet size 9000 test pattern hex 0xabcdabcd
    priority 7
    commit
```

### Example 3

This example shows how to configure a continuous stream of packets at 100 ms intervals for the duration of the probe. Packets are padded to a size of 9000 bytes as needed using a pseudo-random test pattern, and with a class of service value of 7:

```
configure
 ethernet sla
  profile Prof1 type cfm-loopback
   probe
    send burst every 60 seconds packet count 600 interval 100 milliseconds
    packet size 9000 test pattern pseudo-random
    priority 7
    commit
```

## Profile Statistics Measurement Configuration: Examples

These examples show how to configure the different types of statistics measurement.

### Example 1

This example shows the two available types of statistics that can be measured by a CFM loopback SLA profile type:

```
configure
 ethernet sla
  profile  Prof1 type cfm-loopback
  statistics measure round-trip-delay
  statistics measure round-trip-jitter
   commit
```

### Example 2

This example shows how to configure measurement of round-trip delay and one-way jitter (from destination to source) for a CFM delay measurement SLA profile type:

**Note** The CFM delay measurement profile type supports measurement of all round-trip and one-way delay and jitter statistics.

```
configure
 ethernet sla
  profile  Prof1 type cfm-delay-measurement
  statistics measure round-trip-delay
  statistics measure one-way-jitter-ds
   commit
```

## Scheduled SLA Operation Probe Configuration: Examples

These examples show how to configure different schedules for an SLA operation probe.

### Example 1

This example shows how to configure a probe to run hourly for a specified duration:

```
configure
 ethernet sla
  profile  Prof1 type cfm-delay-measurement
  schedule every 1 hours for 15 minutes
  commit
```

### Example 2

This example shows how to configure a probe to run daily for a specified period of time:

```
configure
 ethernet sla
  profile  Prof1 type cfm-delay-measurement
  schedule every day at 11:30 for 5 minutes
  commit
```

### Example 3

This example shows how to configure a probe to run weekly beginning at a specified time and for a specified duration:

```
configure
 ethernet sla
  profile  Prof1 type cfm-delay-measurement
  schedule every week on Monday at 23:30 for 1 hour
  commit
```

## Ethernet SLA Operation Probe Scheduling and Aggregation Configuration: Example

This figure shows a more comprehensive example of how some of the probe scheduling and measurement configuration works using aggregation. The following configuration supports some of the concepts shown in the figure:

```
configure
 ethernet sla profile Prof1 type cfm-loopback
```

```
probe
 send packet every 60 seconds
 schedule every 6 hours for 2 hours
 statistics measure round-trip-delay
  aggregate bins 3 width 30
  buckets size 2 per-probe
  buckets archive 4
  commit
```

*Figure 13: SLA Probe Scheduling Operation With Bin Aggregation*

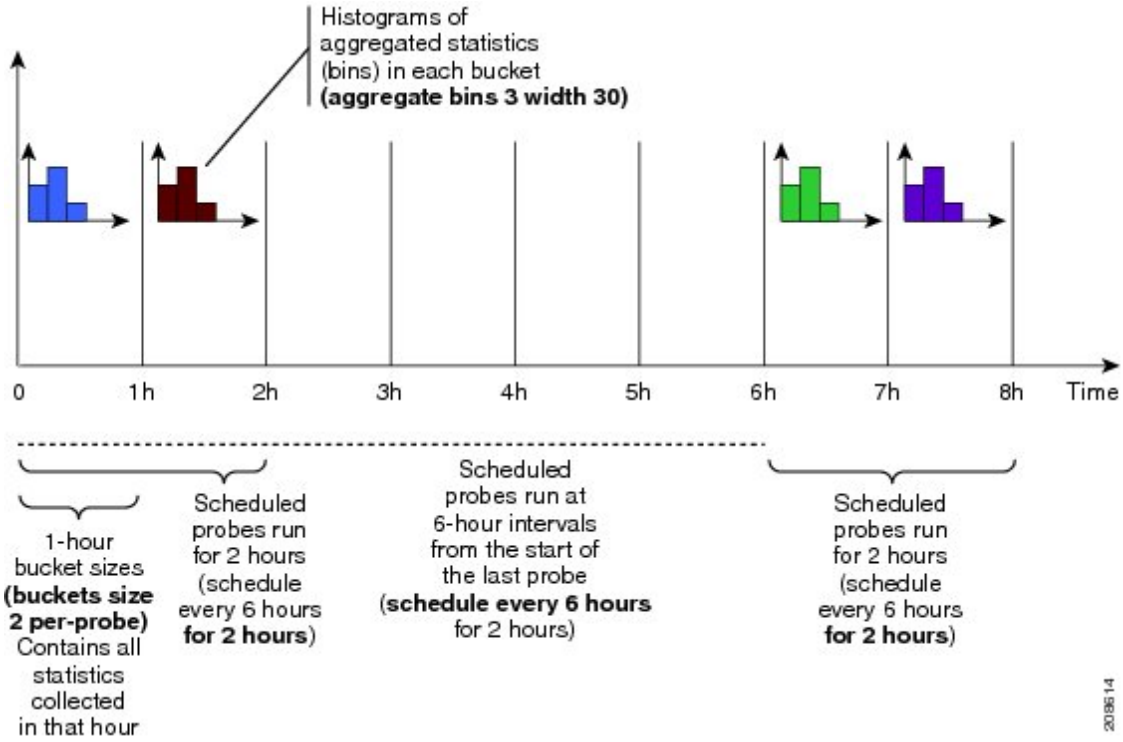


This example schedules a probe with the following characteristics:

- Sends packets 60 seconds apart (for a 2-hour probe, this results in sending 120 individual packets).
- Probe runs every 6 hours for 2 hours duration.
- Collects data into 2 buckets for every probe, so each bucket covers 1 hour of the 2-hour probe duration.
- Aggregates statistics within the buckets into 3 bins each in the following ranges:
  - Bin 1 contains samples in the range 0 to < 30 ms.
  - Bin 2 contains samples in the range 30 ms to < 60 ms.
  - Bin 3 contains samples in the range 60 ms or greater (unbounded).
- The last 4 buckets are saved in memory.

## Ongoing Ethernet SLA Operation Configuration: Example

This example shows how to configure an ongoing Ethernet SLA operation on a MEP:

```
interface gigabitethernet 0/1/0/1
 ethernet cfm
 mep domain Dm1 service Sv1 mep-id 1
 sla operation profile Profile_1 target mac-address 01:23:45:67:89:ab s
 commit
 end
```

## On-Demand Ethernet SLA Operation Basic Configuration: Examples

These examples show how to configure on-demand Ethernet SLA operations.

### Example 1

This example shows how to configure a basic on-demand Ethernet SLA operation for a CFM loopback probe that by default will measure round-trip delay and round-trip jitter for a one-time, 10-second operation to the target MEP:

```
RP/0//CPU0:router# ethernet sla on-demand operation type cfm-loopback probe domain D1 source
 interface TenGigE 0/6/1/0 target mep-id 1
```

### Example 2

This example shows how to configure a basic on-demand Ethernet SLA operation for a CFM delay measurement probe that by default will measure one-way delay and jitter in both directions, as well as round-trip delay and round-trip jitter for a one-time, 10-second operation to the target MEP:

```
RP/0//CPU0:router# ethernet sla on-demand operation type cfm-delay-measurement probe domain
 D1 source interface TenGigE 0/6/1/0 target mep-id 1
```

## Ethernet SLA Y.1731 SLM Configuration: Examples

These examples show how to configure the synthetic loss measurement statistics.

### Example 1

This example shows the default configuration for Y.1731 SLM:

```
ethernet sla
  profile sl1 type cfm-synthetic-loss-measurement
    statistic measure one-way-loss-sd
    statistic measure one-way-loss-ds
```

### Example 2

This example configures a profile named “Sl2” for synthetic loss measurements. with the parameters to configure the probe and SLM statistics:

```
ethernet sla
  profile sl2 type cfm-synthetic-loss-measurement
    probe
      send burst every 5 seconds packet count
                     100 interval 50 milliseconds
      packet size 400 test pattern hex 0xABDC1234
      synthetic loss calculation packets 200
    schedule every 1 hours for 1 minute
```

```
    statistic measure one-way-loss-sd
    statistic measure one-way-loss-ds
      aggregate bins 3 width 30
      bucket size 24 probes
```

## Ethernet SLA Show Commands: Examples

These examples show how to display information about configured SLA operations:

### show ethernet sla operations Command: Example 1

```
RP/0/RSP0/CPU0:router# show ethernet sla operations interface gigabitethernet 0/1/0/1.1

Interface GigabitEthernet0/1/0/1.1
Domain mydom Service myser to 00AB.CDEF.1234
--------------------------------------------------------------------------------
Profile 'business-gold'
Probe type CFM-delay-measurement:
    bursts sent every 1min, each of 20 packets sent every 100ms
    packets padded to 1500 bytes with zeroes
    packets use priority value of 7
Measures RTT: 5 bins 20ms wide; 2 buckets/ probe; 75/100 archived
Measures Jitter (interval 1): 3 bins 40ms wide; 2 buckets/probe; 50 archived
Scheduled to run every Sunday at 4am for 2 hours:
    last run at 04:00 25/05/2008
```

### show ethernet sla configuration-errors Command: Example 2

```
RP/0/RSP0/CPU0:router# show ethernet sla configuration-errors

Errors:
-------
  Profile 'gold' is not defined but is used on Gi0/0/0/0.0
  Profile 'red' defines a test-pattern, which is not supported by the type
```

These examples show how to display the contents of buckets containing SLA metrics collected by probes:

### show ethernet sla statistics current Command: Example 3

```
RP/0/RSP0/CPU0:router# show ethernet sla statistics current interface GigabitEthernet
0/0/0/0.0

Interface GigabitEthernet 0/0/0/0.0
Domain mydom Service myser to 00AB.CDEF.1234
================================================================================
Profile 'business-gold', packet type 'cfm-loopback'
Scheduled to run every Sunday at 4am for 2 hours

Round Trip Delay
~~~~~~~~~~~~~~~~
2 buckets per probe

Bucket started at 04:00 Sun 17 Feb 2008 lasting 1 hour:
    Pkts sent: 2342; Lost 2 (0%); Corrupt: 0 (0%); Misordered: 0 (0%)
    Min: 13ms; Max: 154ms; Mean: 28ms; StdDev: 11ms

Round Trip Jitter
~~~~~~~~~~~~~~~~~
2 buckets per probe
```

```
Bucket started at 04:00 Sun 17 Feb 2008 lasting 1 hour:
    Pkts sent: 2342; Lost: 2 (0%); Corrupt: 0 (0%); Misordered: 0 (0%)
    Min: -5ms; Max: 8ms; Mean: 0ms; StdDev: 3.6ms

Bucket started at 05:00 Sun 17 Feb 2008 lasting 1 hour:
    Pkts sent: 2342; Lost: 2 (0%); Corrupt: 0 (0%); Misordered: 0 (0%)
    Min: 0; Max: 4; Mean: 1.4; StdDev: 1
```

### show ethernet sla statistics history detail Command: Example 4

```
RP/0/RSP0/CPU0:router# show ethernet sla history detail GigabitEthernet 0/0/0/0.0

Interface GigabitEthernet 0/0/0/0.0
Domain mydom Service myser to 00AB.CDEF.1234
===============================================================================
Profile 'business-gold', packet type 'cfm-loopback'
Scheduled to run every Sunday at 4am for 2 hours

Round Trip Delay
~~~~~~~~~~~~~~~~
2 buckets per probe

Bucket started at 04:00 Sun 17 Feb 2008 lasting 1 hour:
    Pkts sent: 2342; Lost: 2 (0%); Corrupt: 0 (0%); Misordered: 0 (0%)
    Min: 13ms, occurred at 04:43:29 on Sun 22 Aug 2010 UTC
    Max: 154ms, occurred at 05:10:32 on Sun 22 Aug 2010 UTC
    Mean: 28ms; StdDev: 11ms

    Results suspect as more than 10 seconds time drift detected
    Results suspect as scheduling latency prevented some packets being sent

    Samples:
    Time sent       Result  Notes
    ------------  --------  ----------
    04:00:01.324      23ms
    04:00:01.425      36ms
    04:00:01.525         -  Timed Out
    ...

Round Trip Jitter
~~~~~~~~~~~~~~~~~
2 buckets per probe

Bucket started at 04:00 Sun 17 Feb 2008, lasting 1 hour:
    Pkts sent: 2342; Lost: 2 (0%); Corrupt: 0 (0%); Misordered: 0 (0%)
    Min: -5ms; Max: 10ms; Mean: 0ms; StdDev: 3.6ms

    Samples:
    Time sent       Result  Notes
    ------------  --------  ----------
    04:00:01.324         -
    04:00:01.425      13ms
    04:00:01.525         -  Timed out
    ...
```

### show ethernet sla statistics history detail on-demand: Example 5

This example shows how to display statistics for all full buckets for on-demand operations in detail:

```
RP/0//CPU0/router #show ethernet sla statistics history detail on-demand
```

```
Interface GigabitEthernet0/0/0/0.1
Domain mydom Service myser to 0123.4567.890A
============================================================================
On-demand operation ID #1, packet type 'cfm-delay-measurement'
Started at 15:38 on 06 July 2010 UTC, runs every 1 hour for 1 hour

Round Trip Delay
~~~~~~~~~~~~~~~~
1 bucket per probe

Bucket started at 15:38 on Tue 06 Jul 2010 UTC, lasting 1 hour:
    Pkts sent: 1200; Lost: 4 (0%); Corrupt: 600 (50%); Misordered: 0 (0%)
    Min: 13ms, occurred at 15:43:29 on Tue 06 Jul 2010 UTC
    Max: 154ms, occurred at 16:15:34 on Tue 06 Jul 2010 UTC
    Mean: 28ms; StdDev: 11ms

    Bins:
    Range              Samples    Cum. Count      Mean
    ------------  ------------  ------------  --------
     0 - 20 ms       194 (16%)     194 (16%)      17ms
    20 - 40 ms       735 (61%)     929 (77%)      27ms
    40 - 60 ms       212 (18%)    1141 (95%)      45ms
    > 60    ms        55  (5%)    1196            70ms

Bucket started at 16:38 on Tue 01 Jul 2008 UTC, lasting 1 hour:
    Pkts sent: 3600; Lost: 12 (0%); Corrupt: 1800 (50%); Misordered: 0 (0%)
    Min: 19ms, occurred at 17:04:08 on Tue 06 Jul 2010 UTC
    Max: 70ms, occurred at 16:38:00 on Tue 06 Jul 2010 UTC
    Mean: 28ms; StdDev: 11ms

    Bins:
    Range              Samples    Cum. Count      Mean
    ------------  ------------  ------------  --------
     0 - 20 ms       194 (16%)     194 (16%)      19ms
    20 - 40 ms       735 (61%)     929 (77%)      27ms
    40 - 60 ms       212 (18%)    1141 (95%)      45ms
    > 60    ms        55  (5%)    1196            64ms
```

show ethernet sla statistics profile Command: Example 6

These examples show how to display statistics for synthetic loss measurement in detail:

```
RP/0/RSP0/CPU0:router#show ethernet sla statistics profile sl2 statistic one-way-loss-sd
detail

Source: Interface GigabitEthernet0/0/0/0, Domain dom1
Destination: Target MAC Address 0002.0003.0005
================================================================================
Profile 'sl1', packet type 'cfm-synthetic-loss-measurement'
Scheduled to run every 1hr first at 00:50:00 UTC for 1min
Frame Loss Ratio calculated every 10s

One-way Frame Loss (Source->Dest)
~~~~~~~~~~~~~~~~~~~~~~~~~~~~~~~~~
1 probes per bucket

Bucket started at 04:50:00 PDT Thu 15 September 2012 lasting 1hr
    Pkts sent: 1200; Lost: 27 (2.25%); Corrupt: 0 (0.0%);
                   Misordered: 0 (0.0%); Duplicates: 0 (0.0%)
    Min: 0.00%, occurred at 04:50:50 PDT Thu 15 September 2011
    Max: 5.50%, occurred at 04:50:20 PDT Thu 15 September 2011
    Mean: 2.08%; StdDev: 1.99%; Overall: 2.08%
```

```
    Measurements:
    Time                      Result  Notes
    ----------  -------------------  ----------
    04:50:00.0    1.50% (3 of 200)
    04:50:10.0    2.00% (4 of 200)
    04:50:20.0    5.50% (11 of 200)
    04:50:30.0    3.00% (6 of 200)
    04:50:40.0    0.50% (1 of 200)
    04:50:50.0    0.00% (0 of 200)
```

In the example 6, the description of the statistics that indicate the lost count and overall FLR are Lost: 27 (2.25%) and Overall: 2.08%. The lost count means that 27 SLMs were lost out of 1200, but it might not be possible to determine in which direction they were lost. The overall FLR reports the overall loss in the Source to Destination direction.

show ethernet sla statistics profile Command: Example 7

```
RP/0/RSP0/CPU0:ios#show ethernet sla statistics profile sl2 statistic one-way-loss-ds detail
Source: Interface GigabitEthernet0/0/0/0, Domain dom1
Destination: Target MAC Address 0002.0003.0005
================================================================================
Profile 'sl2', packet type 'cfm-synthetic-loss-measurement'
Scheduled to run every 1hr first at 00:55:00 UTC for 1min
Frame Loss Ratio calculated every 10s

One-way Frame Loss (Dest->Source)
~~~~~~~~~~~~~~~~~~~~~~~~~~~~~~~~~
24 probes per bucket

Bucket started at 04:55:00 PDT Thu 15 September 2012 lasting 1 day
    Pkts sent: 28800; Lost: 14691 (51.01%); Corrupt: 0 (0.0%);
                      Misordered: 0 (0.0%); Duplicates: 0 (0.0%)
    Min: 10.00%, occurred at 04:55:00 PDT Thu 15 September 2011
    Max: 68.80%, occurred at 06:55:00 PDT Thu 15 September 2011
    Mean: 52.5%; StdDev: 0.00%; Overall: 51.00%

    Bins:
    Range             Count  Cum. Count    Mean
    -----------  ----------  ----------  ------
      0 to  30%  20 (13.9%)  20 (13.9%)  21.00%
     30 to  60%  71 (49.3%)  91 (63.2%)  57.90%
     60 to 100%  49 (34.0%) 144 (100.0%) 62.00%
```

# Configuration Example for Ethernet LMI

Figure 16 shows a basic E-LMI network environment with a local UNI defined on a Cisco ASR 9000 Series Router functioning as the PE using Gigabit Ethernet interface 0/0/0/0, and connectivity to a remote UNI over Gigabit Ethernet interface 0/0/0/1.

*Figure 14: Basic E-LMI UNI and Remote UNI Diagram*

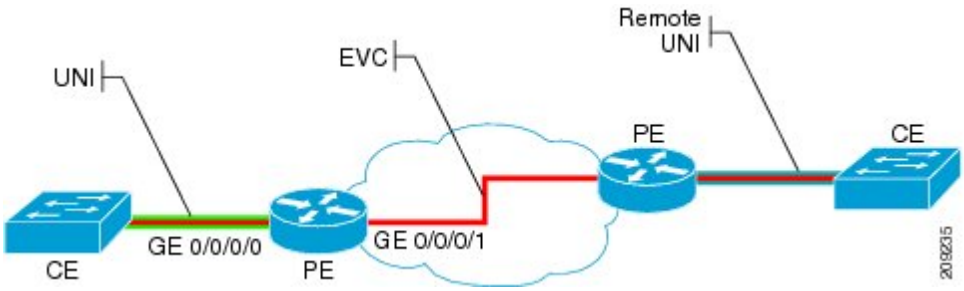


The following configuration provides a basic E-LMI configuration for the environment shown in Figure 16, for the Cisco ASR 9000 Series Router as the PE device on the local UNI with physical Gigabit Ethernet interfaces 0/0/0/0 and 0/0/0/1:

```
RP/0/RSP0/CPU0:router# configure
!
! Configure the Local UNI EFPs
!
RP/0/RSP0/CPU0:router(config)# interface GigabitEthernet0/0/0/0.0 l2transport
RP/0/RSP0/CPU0:router(config-subif)# #encapsulation dot1q 1-20
RP/0/RSP0/CPU0:router(config-subif)# exit
RP/0/RSP0/CPU0:router(config)# interface GigabitEthernet0/0/0/1.1 l2transport
RP/0/RSP0/CPU0:router(config-subif)# #encapsulation dot1q 1-20
RP/0/RSP0/CPU0:router(config-subif)# exit
!
! Create the EVC
!
RP/0/RSP0/CPU0:router(config)# l2vpn
RP/0/RSP0/CPU0:router(config-l2vpn)# bridge group BG1
RP/0/RSP0/CPU0:router(config-l2vpn-bg)# bridge-domain BD1
RP/0/RSP0/CPU0:router(config-l2vpn-bg-bd)# interface GigabitEthernet0/0/0/0.0
RP/0/RSP0/CPU0:router(config-l2vpn-bg-bd)# interface GigabitEthernet0/0/0/1.1
RP/0/RSP0/CPU0:router(config-l2vpn-bg-bd)# exit
RP/0/RSP0/CPU0:router(config-l2vpn-bg)# exit
RP/0/RSP0/CPU0:router(config-l2vpn)# exit
!
! Configure Ethernet CFM
!
RP/0/RSP0/CPU0:router(config)# ethernet cfm
RP/0/RSP0/CPU0:router(config-cfm)# domain GLOBAL level 5
RP/0/RSP0/CPU0:router(config-cfm-dmn)# service CustomerA bridge group BG1 bridge-domain BD1
RP/0/RSP0/CPU0:router(config-cfm-dmn-svc)# continuity-check interval 100ms
RP/0/RSP0/CPU0:router(config-cfm-dmn-svc)# mep crosscheck mep-id 22
RP/0/RSP0/CPU0:router(config-cfm-dmn-svc)# mep crosscheck mep-id 11
RP/0/RSP0/CPU0:router(config-cfm-dmn-svc)# exit
RP/0/RSP0/CPU0:router(config-cfm-dmn)# exit
RP/0/RSP0/CPU0:router(config-cfm)# exit
!
! Configure EFPs as CFM MEPs
!
RP/0/RSP0/CPU0:router(config)# interface GigabitEthernet0/0/0/0.0 l2transport
RP/0/RSP0/CPU0:router(config-subif)# ethernet cfm
RP/0/RSP0/CPU0:router(config-if-cfm)# mep domain GLOBAL service CustomerA mep-id 22
RP/0/RSP0/CPU0:router(config-if-cfm)# exit
RP/0/RSP0/CPU0:router(config-subif)# exit
!
! Configure the Local UNI Name
!
RP/0/RSP0/CPU0:router(config)# interface GigabitEthernet 0/0/0/0
```

```
RP/0/RSP0/CPU0:router(config-if)# ethernet uni id PE1-CustA-Slot0-Port0
RP/0/RSP0/CPU0:router(config-if)# exit
!
! Enable E-LMI on the Local UNI Physical Interface
!
RP/0/RSP0/CPU0:router(config)# interface GigabitEthernet 0/0/0/0
RP/0/RSP0/CPU0:router(config-if)# ethernet lmi
RP/0/RSP0/CPU0:router(config-if)# exit
RP/0/RSP0/CPU0:router(config)# commit
```

# Configuration Examples for Ethernet Data Plane Loopback

This example shows how to configure Ethernet Data Plane Loopback:

```
RP/0/RSP0/CPU0:router# configure
RP/0/RSP0/CPU0:router(config)# interface GigabitEthernet 0/1/0/1
RP/0/RSP0/CPU0:router(config-if-srv)# ethernet loopback permit external
```

This example shows how to start an Ethernet Data Plane Loopback:

```
RP/0/RSP0/CPU0:router# ethernet loopback start local interface gigabitEthernet
 0/1/0/1
external

[source mac-address <addr>]
 [destination mac-address <addr>]
 [ether-type <etype>]
 [{dot1q <vlan-ids> [second-dot1q <vlan-ids>] |
  dot1ad <vlan-ids> [dot1q <vlan-ids>]}]
 [cos <cos>]
 [llc-oui <oui>]
 [timeout {<length> | none}]
```

This example shows how to stop an Ethernet Data Plane Loopback session:

```
RP/0/RSP0/CPU0:router# ethernet loopback stop local interface <name> id <id>
```

This example shows how to extend an Ethernet Data Plane Loopback session:

```
RP/0/RSP0/CPU0:router# ethernet loopback extend local interface <name> id <id>
 length
<length>
```

## Verification

- Use the **show ethernet loopback permitted** command to display all the permitted interfaces which run Ethernet Data Plane Loopback sessions:

```
RP/0/RSP0/CPU0:router# show ethernet loopback permitted
Interface Direction
-----------------------------------------------
GigabitEthernet0/0/0/0 External
GigabitEthernet0/0/0/1.100 Internal
TenGigE0/1/0/0.200 External, Internal
```

- Use the **show ethernet loopback active** command to view active sessions:

```
RP/0/RSP0/CPU0:router# show ethernet loopback active interface
TenGigE0/1/0/0.200

Local: TenGigE0/1/0/0.200, ID 1
=============================================
Direction: Internal
Time out: 2 hours
Time left: 00:01:17
Status: Active
Filters:
 Dot1ad: 100-200
 Dot1q: Any
 Source MAC Address: aaaa.bbbb.cccc
 Destination MAC Address: Any
 Ethertype: 0x8902
 Class of Service: Any
 LLC-OUI: Any
Local: TenGigE0/1/0/0.200, ID 2
=============================================
Direction: External
Time out: 10 minutes
Time left: 00:00:00
Status: Stopping
Filters:
 Dot1q: 500
 Second-dot1q: 200
 Source MAC Address: Any
 Destination MAC Address: Any
 Ethertype: Any
 Class of Service: 4
 LLC-OUI: Any
```

For each loopback session listed, this information is displayed:

- Header containing the Interface name and session ID, which uniquely identify the local loopback session,
- Direction which specifies the direction of the loopback,
- Time out – the time out period specified when the loopback was started,
- Time left – the amount of time left until the loopback session is automatically stopped,
- Status – the status of the loopback session,
- Filters – details of the filters specified when the loopback session was started. Similar to the start CLI, only the filters supported by the platform are displayed.

### Where to Go Next

When you have configured an Ethernet interface, you can configure individual VLAN subinterfaces on that Ethernet interface.

For information about modifying Ethernet management interfaces for the shelf controller (SC), route processor (RP), and distributed RP, see the “Advanced Configuration and Modification of the Management Ethernet Interface on the Cisco ASR 9000 Series Router” module later in this document.

For information about IPv6 see the Implementing Access Lists and Prefix Lists on

Cisco IOS XR Software module in the Cisco IOS XR IP Addresses and Services Configuration Guide

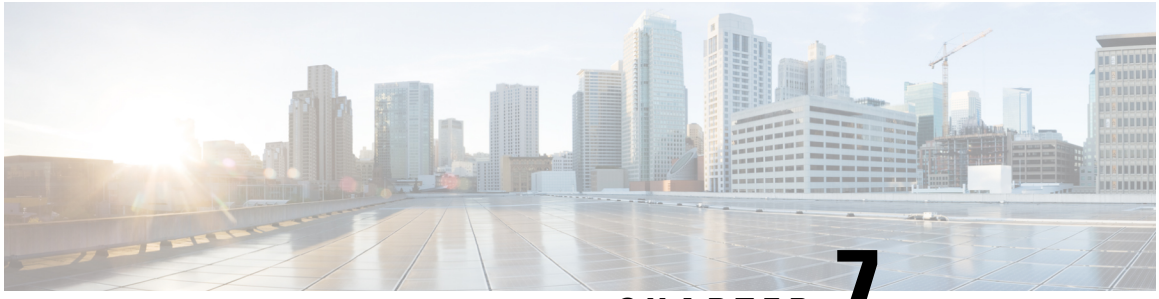

CHAPTER 7

# Configuring Integrated Routing and Bridging

This module describes the configuration of Integrated Routing and Bridging (IRB) on the Cisco ASR 9000 Series Aggregation Services Routers. IRB provides the ability to exchange traffic between bridging services on the Cisco ASR 9000 Series Router and a routed interface using a Bridge-Group Virtual Interface (BVI).

### Feature History for IRB

| Release | Modification |
|---|---|
| Release \\4.0.1 | This feature was introduced on the Cisco ASR 9000 Series Router for the following line cards:<br>• 2-Port 10-Gigabit Ethernet, 20-Port Gigabit Ethernet Combination Line Cards (A9K-2T20GE-B and A9K-2T20GE-L)<br>• 4-Port 10-Gigabit Ethernet Line Cards (A9K-4T-B, -E, -L)<br>• 8-Port 10-Gigabit Ethernet DX Line Cards (A9K-8T/4-B, -E, -L)<br>• 8-Port 10-Gigabit Ethernet Line Cards (A9K-8T-B, -E, -L)<br>• 16-Port 10-Gigabit Ethernet Line Cards (A9K-16T/8-B, -E, -L)<br>• 40-Port Gigabit Ethernet Line Cards (A9K-40GE-B, -E, -L) |

| | |
|---|---|
| Release \\4.1.0 | • Support for the following IRB environment using the Cisco ASR 9000 SIP-700 with any supported SPA as the core-facing interface was added:<br>  • Layer 3 routed traffic from the Cisco ASR 9000 SIP-700 to Layer 2 bridged interfaces on Gigabit Ethernet line cards supporting IRB.<br>  • IPv4 unicast traffic only.<br>• Support for IRB/BVI was included on the Cisco ASR 9000 Enhanced Ethernet Line Card.<br>• Support for IPv6 unicast addressing for IRB and 6PE/6VPE support with BVI interfaces was added for the following line cards:<br>  • 2-Port 10-Gigabit Ethernet, 20-Port Gigabit Ethernet Combination Line Cards (A9K-2T20GE-B and A9K-2T20GE-L)<br>  • 4-Port 10-Gigabit Ethernet Line Cards (A9K-4T-B, -E, -L)<br>  • 8-Port 10-Gigabit Ethernet DX Line Cards (A9K-8T/4-B, -E, -L)<br>  • 8-Port 10-Gigabit Ethernet Line Cards (A9K-8T-B, -E, -L)<br>  • 16-Port 10-Gigabit Ethernet Line Cards (A9K-16T/8-B, -E, -L)<br>  • 40-Port Gigabit Ethernet Line Cards (A9K-40GE-B, -E, -L) |
| Release 5.3.1 | Support for IRB with 802.1ah BVI and Provider Backbone Bridge (PBB) |

**Note** Bridge-Group Virtual Interface (BVI) is not supported on ASR 9000 16-port 100GE QSFP TR (A9K-16X100GE-TR) , ASR 9900 16-port 100GE QSFP SE (A99-16X100GE-X-SE) and ASR 9900 32-port 100GE QSFP TR (A99-32X100GE-TR) line cards.


- Prerequisites for Configuring IRB, on page 263
- Restrictions for Configuring IRB, on page 263
- Information About Configuring IRB, on page 265
- How to Configure IRB, on page 271
- Configuration Examples for IRB, on page 278

# Prerequisites for Configuring IRB

You must be in a user group associated with a task group that includes the proper task IDs. The command reference guides include the task IDs required for each command. If you suspect user group assignment is preventing you from using a command, contact your AAA administrator for assistance.

Before configuring IRB, be sure that these tasks and conditions are met:

- If you have a Cisco ASR 9000 SIP-700 installed on the core-facing side of the router, then you can support IRB for Layer 3 routed to Layer 2 bridged traffic flows for IPv4 unicast traffic, where the Layer 2 destination is one of the supported Gigabit Ethernet line cards for IRB.
- Confirm that you are configuring only the following types of Gigabit Ethernet line cards where you plan to support IRB in support of both Layer 3 to Layer 2 traffic flows and Layer 2 to Layer 3 traffic flows:
  - 2-Port 10-Gigabit Ethernet, 20-Port Gigabit Ethernet Combination Line Cards (A9K-2T20GE-B and A9K-2T20GE-L)
  - 4-Port 10-Gigabit Ethernet Line Cards (A9K-4T-B, -E, -L)
  - 8-Port 10-Gigabit Ethernet DX Line Cards (A9K-8T/4-B, -E, -L)
  - 8-Port 10-Gigabit Ethernet Line Cards (A9K-8T-B, -E, -L)
  - 16-Port 10-Gigabit Ethernet Line Cards (A9K-16T/8-B, -E, -L)
  - 40-Port Gigabit Ethernet Line Cards (A9K-40GE-B, -E, -L)
- Know the IP addressing and other Layer 3 information to be configured on the bridge virtual interface (BVI). For more information, see the Restrictions for Configuring IRB.
- Complete MAC address planning if you decide to override the common global MAC address for all BVIs.
- Be sure that the BVI network address is being advertised by running static or dynamic routing on the BVI interface.

# Restrictions for Configuring IRB

Before configuring IRB, consider these restrictions:

- Only one BVI can be configured in any bridge domain.
- The same BVI can not be configured in multiple bridge domains.

**Caution** If you want to support IRB on a Cisco ASR 9000 Series Router that also has a Cisco ASR 9000 SIP-700 installed, you must be sure to set up your routing configuration to prevent loss of traffic between the SIP-700 and a BVI interface. See the restrictions below for more information.

- Beginning in Cisco IOS XR Release 4.1, IRB can be implemented on supported Gigabit Ethernet line cards in a system where a Cisco ASR 9000 SIP-700 is also installed, with the following restrictions:
  - The Cisco ASR 9000 SIP-700 must be installed on the core-facing side of the router with a BVI interface configured with IPv4 addressing.
  - The Cisco ASR 9000 SIP-700 can support routing of IPv4 unicast traffic from Layer 3 to a bridged Layer 2 interface using IRB, where one of the following Gigabit Ethernet line cards is in the Layer 2 bridge domain:
  - — 2-Port 10-Gigabit Ethernet, 20-Port Gigabit Ethernet Combination Line Cards (A9K-2T20GE-B and A9K-2T20GE-L)
  - — 4-Port 10-Gigabit Ethernet Line Cards (A9K-4T-B, -E, -L)
  - — 8-Port 10-Gigabit Ethernet DX Line Cards (A9K-8T/4-B, -E, -L)
  - — 8-Port 10-Gigabit Ethernet Line Cards (A9K-8T-B, -E, -L)
  - — 16-Port 10-Gigabit Ethernet Line Cards (A9K-16T/8-B, -E, -L)
  - — 40-Port Gigabit Ethernet Line Cards (A9K-40GE-B, -E, -L)

  **Note** The reverse direction of Layer 2 bridged traffic from these line cards to Layer 3 at the Cisco ASR 9000 SIP-700 is also supported.

- The following areas are *not* supported on the BVI:
  - Access Control Lists (ACLs). However, Layer 2 ACLs can be configured on each Layer 2 port of the bridge domain.
  - IP fast reroute (FRR)
  - NetFlow
  - MoFRR
  - Traffic mirroring
  - Unnumbered interface for BVI
  - Video monitoring (Vidmon)
- Multi protocol Label Switching (MPLS) on BVI is supported on Cisco ASR 9000 Enhanced Ethernet Line Cards but not on Cisco ASR 9000 Ethernet Line Cards.
- PIM snooping. (Need to use selective flood.)
- VRF-aware DHCP relay is supported.
- BVIs are supported only on bridge domains with the following characteristics:
  - The bridge domain supports single and double-tagged dot1q- and dot1ad-encapsulated EFPs with non-ambiguous or “exact match” EFP encapsulations. Single and double-tagged encapsulation can be specified as long as the **rewrite ingress tag pop symmetric** command is configured.
  - All Layer 2 tags must be removed. VLAN ranges are not supported.

    - Untagged EFPs are supported.

- These additional functionalities are *not* supported on BVI interfaces in an environment with the Cisco ASR 9000 SIP-700 at the core-facing side:
    - ARP
    - Frame Relay
    - IPv4 multicast traffic
    - IPv6 unicast and multicast traffic
    - Layer 2 traffic flows from the SIP-700 to any Layer 3 interface
    - Layer 2/Layer 3 features on BVI interfaces
    - Load intervals
    - MIBs
    - The **show adjacency details** command is not supported

# Information About Configuring IRB

This section includes the following topics:

## IRB Introduction

IRB provides the ability to route between a bridge group and a routed interface using a BVI. The BVI is a virtual interface within the router that acts like a normal routed interface. A BVI is associated with a single bridge domain and represents the link between the bridging and the routing domains on the router. To support receipt of packets from a bridged interface that are destined to a routed interface, the BVI must be configured with the appropriate IP addresses and relevant Layer 3 attributes.

In software releases before Cisco IOS XR 4.0.1 where IRB is not supported, you would need to implement a physical cabling solution to connect the egress Layer 2 bridge domain interface to a Layer 3 routing domain interface on the same Cisco ASR 9000 Series Router. In Cisco IOS XR Release 4.0.1, IRB accomplishes the same functionality using a BVI and its supporting interface and bridge group configuration shown in this figure.

*Figure 15: IRB Functional View and Configuration Elements*

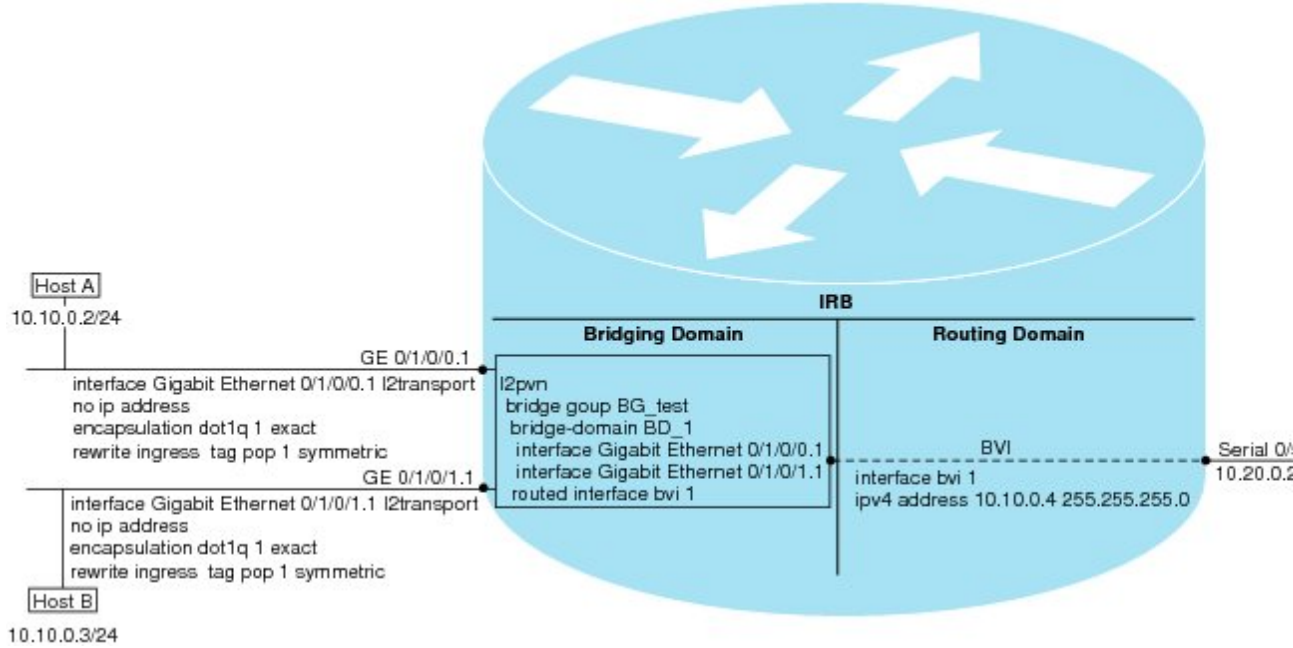


# Bridge-Group Virtual Interface

This section includes the following information:

## Bridge-Group Virtual Interface

The BVI is a virtual interface within the router that acts like a normal routed interface. The BVI does not support bridging itself, but acts as a gateway for the corresponding bridge-domain to a routed interface within the router.

Aside from supporting a configurable MAC address, a BVI supports only Layer 3 attributes, and has the following characteristics:

- Uses a MAC address taken from the local chassis MAC address pool, unless overridden at the BVI interface.
- Is configured as an interface type using the **interface BVI** command and uses an IPv4 address that is in the same subnet as the hosts on the segments of the bridged domain. The BVI also supports secondary addresses.
- The BVI identifier is independent of the bridge-domain identifier. These identifiers do not need to correlate like they do in Cisco IOS software.
- Is associated to a bridge group using the **routed interface BVI** command.
- BVI interfaces support a number range of 1 to 4294967295.

## Supported Features on a BVI

- These interface commands are supported on a BVI:

- **arp purge-delay**
- arp timeout
- **bandwidth** (The default is 10 Gbps and is used as the cost metric for routing protocols for the BVI)
- **ipv4**
- **ipv6** (not supported in IRB environment with the Cisco ASR 9000 SIP-700)
- **mac-address**
- **mtu** (The default is 1500 bytes)
- **shutdown**

- The BVI supports IP helper addressing and secondary IP addressing.

## BVI MAC Address

By default, the Cisco ASR 9000 Series Router uses one MAC address for all BVI interfaces on the router. However, this means that the MAC address is not unique globally. If you want to override the default and specify a unique MAC address at the BVI, then you can configure it at the BVI interface.

## BVI Interface and Line Protocol States

Like typical interface states on the router, a BVI has both an Interface and Line Protocol state.

- The BVI interface state is Up when the following occurs:
  - The BVI interface is created.
  - The bridge-domain that is configured with the **routed interface bvi** command has at least one available active bridge port (Attachment circuit [AC] or pseudowire [PW]).

**Note** A BVI will be moved to the Down state if all of the bridge ports (Ethernet flow points [EFPs]) associated with the bridge domain for that BVI are down. However, the BVI will remain up if at least one pseudowire is up, even if all EFPs are down.

- The following characteristics determine when the the BVI line protocol state is up:
  - The bridge-domain is in Up state.
  - The BVI IP address is not in conflict with any other IP address on another active interface in the router.

# Packet Flows Using IRB

This figure shows a simplified functional diagram of an IRB implementation to describe different packet flows between Host A, B, and C. In this example, Host C is on a network with a connection to the same router. In reality, another router could be between Host C and the router shown.

*Figure 16: IRB Packet Flows Between Hosts*

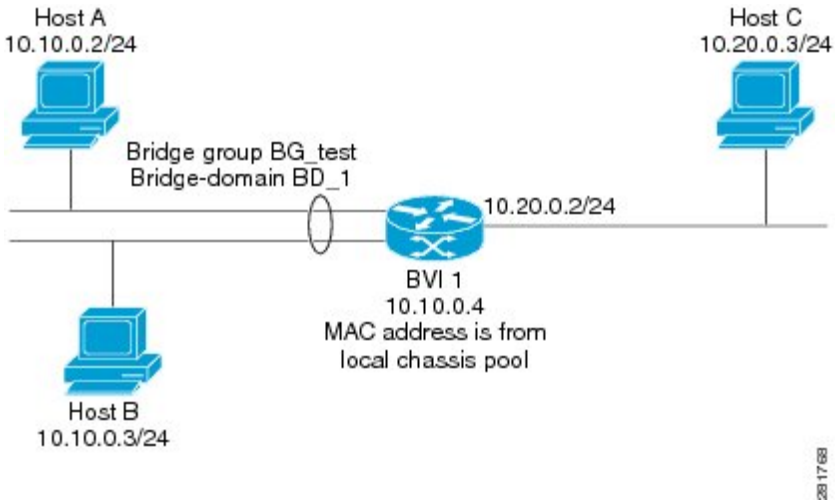


When IRB is configured on a router, the following processing happens:

- ARP requests are resolved between the hosts and BVI that are part of the bridge domain.
- All packets from a host on a bridged interface go to the BVI if the destination MAC address matches the BVI MAC address. Otherwise, the packets are bridged.
- For packets destined for a host on a routed network, the BVI forwards the packets to the routing engine before sending them out a routed interface.
- All packets either from or destined to a host on a bridged interface go to the BVI first (unless the packet is destined for a host on the bridge domain).
- For packets that are destined for a host on a segment in the bridge domain that come in to the router on a routed interface, the BVI forwards the packet to the bridging engine, which forwards it through the appropriate bridged interface.

## Packet Flows When Host A Sends to Host B on the Bridge Domain

When Host A sends data to Host B in the bridge domain on the 10.10.0.0 network, no routing occurs. The hosts are on the same subnet and the packets are bridged between their segment interfaces on the router.

## Packet Flows When Host A Sends to Host C From the Bridge Domain to a Routed Interface

Using host information from this figure, the following occurs when Host A sends data to Host C from the IRB bridging domain to the routing domain:

- Host A sends the packet to the BVI (as long any ARP request the is resolved between the host and the BVI). The packet has the following information:
  - Source MAC address of host A.
  - Destination MAC address of the BVI.
- Since Host C is on another network and needs to be routed, the BVI forwards the packet to the routed interface with the following information:

    - IP source MAC address of Host A (10.10.0.2) is changed to the MAC address of the BVI (10.10.0.4).
    - IP destination address is the IP address of Host C (10.20.0.3).

- Interface 10.20.0.2 sees receipt of a packet from the routed BVI 10.10.0.4. The packet is then routed through interface 10.20.0.2 to Host C.

## Packet Flows When Host C Sends to Host B From a Routed Interface to the Bridge Domain

Using host information from this figure, the following occurs when Host C sends data to Host B from the IRB routing domain to the bridging domain:

- The packet comes into the routing domain with the following information:
    - MAC source address—MAC of Host C.
    - MAC destination address—MAC of the 10.20.0.2 ingress interface.
    - IP source address—IP address of Host C (10.20.0.3).
    - IP destination address—IP address of Host B (10.10.0.3).
- When interface 10.20.0.2 receives the packet, it looks in the routing table and determines that the packet needs to be forwarded to the BVI at 10.10.0.4.
- The routing engine captures the packet that is destined for the BVI and forwards it to the BVI's corresponding bridge domain. The packet is then bridged through the appropriate interface if the destination MAC address for Host B appears in the bridging table, or is flooded on all interfaces in the bridge group if the address is not in the bridging table.

# Supported Environments for IRB

These environments and configuration elements are supported with IRB on the Cisco ASR 9000 Series Router:

- Configuration of one BVI per bridge domain.
- Virtual Private LAN Service (VPLS) virtual forwarding instance (VFI) configuration associated with a bridge domain configured with a BVI.
- BGP PIC edge for BVI-based prefixes.
- Traffic forwarding for the BVI using Open Shortest Path First (OSPF), Intermediate System-to-Intermediate System (IS-IS), Routing Information Protocol Version 2 (RIPv2), and Border Gateway Protocol (BGP).
- Internet Group Management Protocol (IGMP) static groups.
- Dynamic Host Configuration Protocol (DHCP) relay agent. When DHCP relay is used from an aggregation node to obtain an IP address, the default gateway will be the IP address configured on the BVI. The BVI IP address should be in a common subnet as the DHCP pool that is being used by the aggregation node to assign IP addresses.
- Virtual Router Redundancy Protocol (VRRP) configuration and priority.
- Hot Standby Router Protocol (HSRP).

- Up to 255 VRRF/HSRP VMAC per BVI interface.
- Bridging of non-IP packets on a bridge domain configured with a BVI.
- Parity with stateful protocol support as currently supported on Layer 3 subinterfaces on the Cisco ASR 9000 Series Router.
- IP SLA support as currently supported on Layer 3 subinterfaces on the Cisco ASR 9000 Series Router.
- Load balancing of BVIs as ECMP paths (up to 32 paths).
- Interface-MIB.
- Packet counters for BVI interfaces.
- Multi-chassis link aggregation (LAG) on link bundles that are members of a bridge domain that uses a BVI.

The following sections document additional IPv4- and IPv6-specific environments supported for IRB:

## Additional IPv4-Specific Environments Supported for IRB

- Configuration of up to a maximum of 2000 BVIs.
- Up to a maximum of128k IPv4 adjacencies.
- Layer 3 IP multicast, with ability to take ingress IP multicast traffic and bridge it to multiple Layer 2 subinterfaces (Ethernet flow points) on a bridge domain that are part of multicast groups.

**Note** Not supported when used with the Cisco ASR 9000 SIP-700 at core-facing side.

- VRFs for IPv4 (Per-VPN label VRFs only—not per prefix).

## Additional IPv6-Specific Environments Supported for IRB

- Configuration of up to a maximum of 2000 BVIs, with up to 512 of these BVIs that can support IPv6 addressing.
- Up to a maximum of 5k IPv6 adjacencies.
- Cisco IPv6 Provider Edge Router over MPLS (6PE) and IPv6 VPN Provider Edge (6VPE) support with BVI interfaces at the customer edge (CE)-facing side of the Cisco ASR 9000 Series Router as the PE device with the following restrictions:
  - Supported by the following line cards on the PE devices:

    — 2-Port 10-Gigabit Ethernet, 20-Port Gigabit Ethernet Combination Line Cards (A9K-2T20GE-B and A9K-2T20GE-L)

    — 4-Port 10-Gigabit Ethernet Line Cards (A9K-4T-B, -E, -L)

    — 8-Port 10-Gigabit Ethernet DX Line Cards (A9K-8T/4-B, -E, -L)

    — 8-Port 10-Gigabit Ethernet Line Cards (A9K-8T-B, -E, -L)

— 16-Port 10-Gigabit Ethernet Line Cards (A9K-16T/8-B, -E, -L)

— 40-Port Gigabit Ethernet Line Cards (A9K-40GE-B, -E, -L)

- Up to 512 BVIs with IPv6 addressing can be supported.
- Only per-VRF label allocation is supported (using the **label-allocation-mode per-vrf** command).

  For a configuration example, see the 6PE/6VPE With BVI Configuration: Example.

# How to Configure IRB

This section includes the following configuration tasks:

## Configuring the Bridge Group Virtual Interface

To configure a BVI, complete the following steps.

### Configuration Guidelines

Consider the following guidelines when configuring the BVI:

- The BVI must be assigned an IPv4 or IPv6 address that is in the same subnet as the hosts in the bridged segments.
- If the bridged network has multiple IP networks, then the BVI must be assigned secondary IP addresses for each network.

#### SUMMARY STEPS

1. **configure**
2. **interface bvi** *identifier*
3. **ipv4 address** *ipv4-address mask* [**secondary**] **ipv6 address** *ipv6-prefix/prefix-length* [**eui-64**] [**route-tag** *route-tag value*]
4. **arp purge-delay** *seconds*
5. **arp timeout** *seconds*
6. **bandwidth** *rate*
7. **mac-address** *value1.value2.value3*
8. **mtu** *bytes*
9. **end** or **commit**

#### DETAILED STEPS

| | Command or Action | Purpose |
|---|---|---|
| **Step 1** | **configure**<br>**Example:**<br>`RP/0/RSP0/CPU0:router# configure` | Enters the global configuration mode. |

| | Command or Action | Purpose |
|---|---|---|
| **Step 2** | **interface bvi** *identifier*<br>**Example:**<br>`RP/0/RSP0/CPU0:router(config)# interface bvi 1` | Specifies or creates a BVI, where *identifier* is a number from 1 to 65535. |
| **Step 3** | **ipv4 address** *ipv4-address mask* [**secondary**] **ipv6 address** *ipv6-prefix/prefix-length* [**eui-64**] [**route-tag** *route-tag value*]<br>**Example:**<br>`RP/0/RSP0/CPU0:router(config-if)# ipv4 address 10.10.0.4 255.255.255.0` | Specifies a primary or secondary IPv4 address or an IPv6 address for an interface. |
| **Step 4** | **arp purge-delay** *seconds*<br>**Example:**<br>`RP/0/RSP0/CPU0:router(config-if)#arp purge-delay 120` | (Optional) Specifies the amount of time (in *seconds*) to delay purging of Address Resolution Protocol (ARP) table entries when the interface goes down.<br>The range is 1 to 65535. By default purge delay is not configured. |
| **Step 5** | **arp timeout** *seconds*<br>**Example:**<br>`RP/0/RSP0/CPU0:router(config-if)# arp timeout 12200` | (Optional) Specifies how long dynamic entries learned on the interface remain in the ARP cache.<br>The range is 30 to 2144448000 seconds. The default is 14,400 seconds (4 hours). |
| **Step 6** | **bandwidth** *rate*<br>**Example:**<br>`RP/0/RSP0/CPU0:router(config-if)# bandwidth 1000000` | (Optional) Specifies the amount of bandwidth (in kilobits per second) to be allocated on the interface. This number is used as the cost metric in routing protocols for the BVI.<br>The range is 0 to 4294967295. The default is 10000000 (10 Gbps). |
| **Step 7** | **mac-address** *value1.value2.value3*<br>**Example:**<br>`RP/0/RSP0/CPU0:router(config-if)# mac-address 1111.2222.3333` | (Optional) Specifies the 48-bit MAC address for the BVI as three dotted-hexadecimal values, and overrides use of the default MAC address. The range for each value is 0000 to ffff. A MAC address of all 0s is not supported. |
| **Step 8** | **mtu** *bytes*<br>**Example:**<br>`RP/0/RSP0/CPU0:router(config-if)# mtu 2000` | (Optional) Specifies the maximum transmission unit (MTU) size for packets on the interface. The range is 64 to 65535. The default is 1514. |
| **Step 9** | **end** or **commit**<br>**Example:**<br>`RP/0/RSP0/CPU0:router(config-if)# end`<br>or | Saves configuration changes.<br>• When you issue the **end** command, the system prompts you to commit changes:<br>`Uncommitted changes found, commit them before` |

| | Command or Action | Purpose |
|---|---|---|
| | `RP/0/RSP0/CPU0:router(config-if)# commit` | `exiting(yes/no/cancel)? [cancel]:`<br>Entering **yes** saves configuration changes to the running configuration file, exits the configuration session, and returns the router to EXEC mode.<br>Entering **no** exits the configuration session and returns the router to EXEC mode without committing the configuration changes.<br>Entering **cancel** leaves the router in the current configuration session without exiting or committing the configuration changes.<br>• Use the **commit** command to save the configuration changes to the running configuration file and remain within the configuration session. |

# Configuring the Layer 2 AC Interfaces

To configure the Layer 2 AC interfaces for routing by a BVI, complete the following steps.

### Before you begin

The interfaces to be configured as Layer 2 ACs in the bridge domain and routed by a BVI must be located on the following types of cards supporting IRB on the Cisco ASR 9000 Series Router:

- 2-Port 10-Gigabit Ethernet, 20-Port Gigabit Ethernet Combination Line Cards (A9K-2T20GE-B and A9K-2T20GE-L)
- 4-Port 10-Gigabit Ethernet Line Cards (A9K-4T-B, -E, -L)
- 8-Port 10-Gigabit Ethernet DX Line Cards (A9K-8T/4-B, -E, -L)
- 8-Port 10-Gigabit Ethernet Line Cards (A9K-8T-B, -E, -L)
- 40-Port Gigabit Ethernet Line Cards (A9K-40GE-B, -E, -L)

## SUMMARY STEPS

1. **configure**
2. **interface** [**GigabitEthernet** | **TenGigE**] *interface-path-id*[**.***subinterface*] **l2transport**
3. **encapsulation dot1q** *vlan-id* [**exact**]or**encapsulation dot1ad** *vlan-id* **dot1q** *vlan-id*
4. **rewrite ingress tag pop** {**1** | **2**} **symmetric**
5. **end** or **commit**

## DETAILED STEPS

| | Command or Action | Purpose |
|---|---|---|
| **Step 1** | **configure**<br>**Example:**<br>`RP/0/RSP0/CPU0:router# configure` | Enters global configuration mode. |
| **Step 2** | **interface** [**GigabitEthernet** \| **TenGigE**] *interface-path-id*[**.***subinterface*] **l2transport**<br>**Example:**<br>`RP/0/RSP0/CPU0:router(config)# interface GigabitEthernet 0/1/0/0.1 l2transport` | Enables Layer 2 transport mode on a Gigabit Ethernet or 10-Gigabit Ethernet interface or subinterface and enters interface or subinterface configuration mode, where *interface-path-id* is specified as the *rack*/*slot*/*module*/*port* location of the interface and **.***subinterface* is the optional subinterface number. |
| **Step 3** | **encapsulation dot1q** *vlan-id* [**exact**]or**encapsulation dot1ad** *vlan-id* **dot1q** *vlan-id*<br>**Example:**<br>`RP/0/RSP0/CPU0:router(config-if)# encapsulation dot1q 1 exact` | (Optional) Specifies IEEE 802.1q encapsulation on the specified VLAN only. |
| **Step 4** | **rewrite ingress tag pop** {**1** \| **2**} **symmetric**<br>**Example:**<br>`RP/0/RSP0/CPU0:router(config-if)# rewrite ingress tag pop 1 symmetric` | (Required if VLAN tagging configured) Specifies that one or two tags (depending on the network configuration) should be removed from frames arriving at the ingress interface to the bridge domain.<br>**Note** • If configuring double tags using dot1ad and dot1q encapsulation, you need to use the **rewrite ingress tag pop 2 symmetric** command. |
| **Step 5** | **end** or **commit**<br>**Example:**<br>`RP/0/RSP0/CPU0:router(config-if)# end`<br>or<br>`RP/0/RSP0/CPU0:router(config-if)# commit` | Saves configuration changes.<br>• When you issue the **end** command, the system prompts you to commit changes:<br>`Uncommitted changes found, commit them before exiting(yes/no/cancel)? [cancel]:`<br>• Entering **yes** saves configuration changes to the running configuration file, exits the configuration session, and returns the router to EXEC mode.<br>• Entering **no** exits the configuration session and returns the router to EXEC mode without committing the configuration changes.<br>• Entering **cancel** leaves the router in the current configuration session without exiting or committing the configuration changes. |

| | Command or Action | Purpose |
|---|---|---|
| | | • Use the **commit** command to save the configuration changes to the running configuration file and remain within the configuration session. |

# Configuring a Bridge Group and Assigning Interfaces to a Bridge Domain

To configure a bridge group and assign interfaces to a bridge domain, complete the following steps.

### SUMMARY STEPS

1. **configure**
2. **l2vpn**
3. **bridge group** *bridge-group-name*
4. **bridge-domain** *bridge-domain-name*
5. **interface** [**GigabitEthernet** | **TenGigE**] *interface-path-id*[**.***subinterface*]
6. **end** or **commit**

### DETAILED STEPS

| | Command or Action | Purpose |
|---|---|---|
| **Step 1** | **configure**<br>**Example:**<br>`RP/0/RSP0/CPU0:router# configure` | Enters global configuration mode. |
| **Step 2** | **l2vpn**<br>**Example:**<br>`RP/0/RSP0/CPU0:router(config)# l2vpn` | Enters L2VPN configuration mode. |
| **Step 3** | **bridge group** *bridge-group-name*<br>**Example:**<br>`RP/0/RSP0/CPU0:router(config-l2vpn)# bridge group 10` | Creates a bridge group and enters L2VPN bridge group configuration mode. |
| **Step 4** | **bridge-domain** *bridge-domain-name*<br>**Example:**<br>`RP/0/RSP0/CPU0:router(config-l2vpn-bg)# bridge-domain BD_1` | Creates a bridge domain and enters L2VPN bridge group bridge domain configuration mode. |
| **Step 5** | **interface** [**GigabitEthernet** \| **TenGigE**] *interface-path-id*[**.***subinterface*]<br>**Example:** | Associates the Gigabit Ethernet and 10-Gigabit Ethernet interface with the specified bridge domain and enters L2VPN bridge group bridge domain attachment circuit configuration mode, where *interface-path-id* is specified |

| | Command or Action | Purpose |
|---|---|---|
| | `RP/0/RSP0/CPU0:router(config-l2vpn-bg-bd)# interface GigabitEthernet 0/1/0/0.1` | as the *rack/slot/module/port* location of the interface and *.subinterface* is the optional subinterface number.<br>Repeat this step for as many interfaces as you want to associate with the bridge domain. |
| **Step 6** | **end** or **commit**<br>**Example:**<br>`RP/0/RSP0/CPU0:router(config-l2vpn-bg-bd-ac)# end`<br>or<br>`RP/0/RSP0/CPU0:router(config-l2vpn-bg-bd-ac)# commit` | Saves configuration changes.<br>• When you issue the **end** command, the system prompts you to commit changes:<br>`Uncommitted changes found, commit them before exiting(yes/no/cancel)? [cancel]:`<br>• Entering **yes** saves configuration changes to the running configuration file, exits the configuration session, and returns the router to EXEC mode.<br>• Entering **no** exits the configuration session and returns the router to EXEC mode without committing the configuration changes.<br>• Entering **cancel** leaves the router in the current configuration session without exiting or committing the configuration changes.<br>• Use the **commit** command to save the configuration changes to the running configuration file and remain within the configuration session. |

# Associating the BVI as the Routed Interface on a Bridge Domain

To associate the BVI as the routed interface on a bridge domain, complete the following steps.

### SUMMARY STEPS

1. **configure**
2. **l2vpn**
3. **bridge group** *bridge-group-name*
4. **bridge-domain** *bridge-domain-name*
5. **routed interface bvi** *identifier*
6. **end** or **commit**

### DETAILED STEPS

| | Command or Action | Purpose |
|---|---|---|
| **Step 1** | **configure**<br>**Example:** | Enters global configuration mode. |

| | Command or Action | Purpose |
|---|---|---|
| | `RP/0/RSP0/CPU0:router# configure` | |
| **Step 2** | **l2vpn**<br>**Example:**<br>`RP/0/RSP0/CPU0:router(config)# l2vpn` | Enters L2VPN configuration mode. |
| **Step 3** | **bridge group** *bridge-group-name*<br>**Example:**<br>`RP/0/RSP0/CPU0:router(config-l2vpn)# bridge group BG_test` | Creates a bridge group and enters L2VPN bridge group configuration mode. |
| **Step 4** | **bridge-domain** *bridge-domain-name*<br>**Example:**<br>`RP/0/RSP0/CPU0:router(config-l2vpn-bg)# bridge-domain 1` | Creates a bridge domain and enters L2VPN bridge group bridge domain configuration mode. |
| **Step 5** | **routed interface bvi** *identifier*<br>**Example:**<br>`RP/0/RSP0/CPU0:router(config-l2vpn-bg-bd)# routed interface bvi 1` | Associates the specified BVI as the routed interface for the interfaces assigned to the bridge domain. |
| **Step 6** | **end** or **commit**<br>**Example:**<br>`RP/0/RSP0/CPU0:router(config-l2vpn-bg-bd)# end`<br>or<br>`RP/0/RSP0/CPU0:router(config-l2vpn-bg-bd)# commit` | Saves configuration changes.<br>• When you issue the **end** command, the system prompts you to commit changes:<br>`Uncommitted changes found, commit them before exiting(yes/no/cancel)? [cancel]:`<br>• Entering **yes** saves configuration changes to the running configuration file, exits the configuration session, and returns the router to EXEC mode.<br>• Entering **no** exits the configuration session and returns the router to EXEC mode without committing the configuration changes.<br>• Entering **cancel** leaves the router in the current configuration session without exiting or committing the configuration changes.<br>• Use the **commit** command to save the configuration changes to the running configuration file and remain within the configuration session. |

## Displaying Information About a BVI

To display information about BVI status and packet counters, use the following commands:

| | |
|---|---|
| **show interfaces bvi** *identifier* [**accounting** \| **brief** \| **description** \| **detail** ] | Displays interface status, line protocol state, and packet counters for the specified BVI. |
| **show adjacency bvi** *identifier* [**detail** \| **remote**] | Displays packet and byte transmit counters per adjacency to the specified BVI. |
| **show l2vpn bridge-domain detail** | Displays the reason that a BVI is down. |

# Configuration Examples for IRB

This section provides the following configuration examples:

## Basic IRB Configuration: Example

The following example shows how to perform the most basic IRB configuration:

```
! Configure the BVI and its IPv4 address
!
RP/0/RSP0/CPU0:router# configure
RP/0/RSP0/CPU0:router(config)# interface bvi 1
RP/0/RSP0/CPU0:router(config-if))# ipv4 address 10.10.0.4 255.255.255.0
RP/0/RSP0/CPU0:router(config-if))# exit
!
! Configure the Layer 2 AC interface
!
RP/0/RSP0/CPU0:router(config)# interface GigabitEthernet 0/1/0/0 l2transport
RP/0/RSP0/CPU0:router(config-if))# exit
!
! Configure the L2VPN bridge group and bridge domain and assign interfaces
!
RP/0/RSP0/CPU0:router(config)# l2vpn
RP/0/RSP0/CPU0:router(config-l2vpn)# bridge group 10
RP/0/RSP0/CPU0:router(config-l2vpn-bg)# bridge-domain 1
RP/0/RSP0/CPU0:router(config-l2vpn-bg-bd)# interface GigabitEthernet 0/1/0/0
RP/0/RSP0/CPU0:router(config-l2vpn-bg-bd-if)# exit
!
! Associate a BVI to the bridge domain
!
RP/0/RSP0/CPU0:router(config-l2vpn-bg-bd)# routed interface bvi 1
RP/0/RSP0/CPU0:router(config-l2vpn-bg-bd)# commit
```

## IRB Using ACs With VLANs: Example

The following example shows how to configure IRB on a bridge domain with Layer 2 ACs using 802.1q-encapsulated VLANs:

```
! Configure the BVI and its IPv4 address
!
```

```
RP/0/RSP0/CPU0:router# configure
RP/0/RSP0/CPU0:router(config)# interface bvi 1
RP/0/RSP0/CPU0:router(config-if))# ipv4 address 10.10.0.4 255.255.255.0
RP/0/RSP0/CPU0:router(config-if))# exit
!
! Configure the Layer 2 AC interfaces using dot1q encapsulation on a VLAN
!
RP/0/RSP0/CPU0:router(config)# interface GigabitEthernet 0/1/0/0.1 l2transport
RP/0/RSP0/CPU0:router(config-if))# no ip address
RP/0/RSP0/CPU0:router(config-if))# encapsulation dot1q 1 exact
RP/0/RSP0/CPU0:router(config-if))# rewrite ingress tag pop 1 symmetric
RP/0/RSP0/CPU0:router(config-if))# exit
RP/0/RSP0/CPU0:router(config)# interface GigabitEthernet 0/1/0/1.1 l2transport
RP/0/RSP0/CPU0:router(config-if))# no ip address
RP/0/RSP0/CPU0:router(config-if))# encapsulation dot1q 1 exact
RP/0/RSP0/CPU0:router(config-if))# rewrite ingress tag pop 1 symmetric
RP/0/RSP0/CPU0:router(config-if))# exit
!
! Configure the L2VPN bridge group and bridge domain and assign interfaces
!
RP/0/RSP0/CPU0:router(config)# l2vpn
RP/0/RSP0/CPU0:router(config-l2vpn)# bridge group 10
RP/0/RSP0/CPU0:router(config-l2vpn-bg)# bridge-domain 1
RP/0/RSP0/CPU0:router(config-l2vpn-bg-bd)# interface GigabitEthernet 0/1/0/0.1
RP/0/RSP0/CPU0:router(config-l2vpn-bg-bd)# interface GigabitEthernet 0/1/0/1.1
RP/0/RSP0/CPU0:router(config-l2vpn-bg-bd-if)# exit
!
! Associate a BVI to the bridge domain
!
RP/0/RSP0/CPU0:router(config-l2vpn-bg-bd)# routed interface bvi 1
RP/0/RSP0/CPU0:router(config-l2vpn-bg-bd)# commit
```

# IPv4 Addressing on a BVI Supporting Multiple IP Networks: Example

The following example shows how to configure secondary IPv4 addresses on a BVI that supports bridge domains for the 10.10.10.0/24, 10.20.20.0/24, and 10.30.30.0/24 networks. In this example, the BVI must have an address on each of the bridge domain networks:

```
RP/0/RSP0/CPU0:router# configure
RP/0/RSP0/CPU0:router(config)# interface bvi 1
RP/0/RSP0/CPU0:router(config-if))# ipv4 address 10.10.10.4 255.255.255.0
RP/0/RSP0/CPU0:router(config-if))# ipv4 address 10.20.20.4 255.255.255.0 secondary
RP/0/RSP0/CPU0:router(config-if))# ipv4 address 10.30.30.4 255.255.255.0 secondary
RP/0/RSP0/CPU0:router(config-if))# commit
```

# Comprehensive IRB Configuration with BVI Bundle Interfaces and Multicast Configuration: Example

The following example shows a more comprehensive router configuration with IRB and BVI multicast support:

```
interface Bundle-Ether25
 ipv4 address 10.21.0.2 255.255.255.0
!
interface Loopback0
 ipv4 address 10.5.5.5 255.255.255.255
!
```

```
interface GigabitEthernet0/0/0/1
 negotiation auto
!
interface GigabitEthernet0/0/0/1.1 l2transport
 encapsulation dot1q 1
 rewrite ingress tag pop 1 symmetric
!
interface GigabitEthernet0/0/0/1.2 l2transport
 encapsulation dot1q 2
 rewrite ingress tag pop 1 symmetric
!

interface GigabitEthernet0/0/0/9
 bundle id 25 mode active
!
interface GigabitEthernet0/0/0/19
 bundle id 25 mode active
!
interface GigabitEthernet0/0/0/29
 bundle id 25 mode active
!

interface GigabitEthernet0/0/0/39
 bundle id 25 mode active

interface BVI1
 ipv4 address 10.1.1.1 255.255.255.0
!
interface BVI2
 ipv4 address 10.1.2.1 255.255.255.0

router ospf 100
 router-id 10.5.5.5
 area 0
  interface Bundle-Ether25
    interface Loopback0
    interface BVI1
   interface BVI2
  !
l2vpn
 bridge group IRB
  bridge-domain IRB1
   igmp snooping profile IRB_SNOOP
   interface GigabitEthernet0/0/0/1.1
   !
   routed interface BVI1
  !
  bridge-domain IRB2
   igmp snooping profile IRB_SNOOP
   interface GigabitEthernet0/0/0/1.2
   !
   routed interface BVI2

multicast-routing
 address-family ipv4
  interface all enable
igmp snooping profile IRB_SNOOP
 report-suppression disable
!
router pim
 address-family ipv4
  rp-address 10.10.10.10
```

# IRB With BVI and VRRP Configuration: Example

This example shows a partial router configuration for the relevant configuration areas for IRB support of a BVI and VRRP:

**Note** VRRPv6 is also supported.

```
l2vpn
 bridge group IRB
  bridge-domain IRB-EDGE
   interface GigabitEthernet0/0/0/8
!
   routed interface BVI 100
!
interface GigabitEthernet0/0/0/8
  l2transport
!
interface BVI 100
 ipv4 address 10.21.1.1 255.255.255.0
!
router vrrp
 interface BVI 100
  vrrp 1 ipv4 10.21.1.100
  vrrp 1 priority 100
 !
```

# 6PE/6VPE With BVI Configuration: Example

The following example shows how to configure an MPLS 6PE/6VPE environment using BVIs at the CE-facing sides of the Cisco ASR 9000 Series Router as the PE devices. For more information about Cisco 6PE/6VPE and its configuration, see the "Implementing IPv6 VPN Provider Edge Transport Over MPLS" chapter of the Cisco ASR 9000 Series Aggregation Services Router MPLS Layer 3 VPN Configuration Guide.

**Note** This environment is only supported using IRB with the supported Gigabit Ethernet line cards on the Cisco ASR 9000 Series Router. It is not supported with the Cisco ASR 9000 SIP-700 SPAs.

This figure shows the location of the BVI interfaces (green icons) on the Cisco ASR 9000 Series Routers as the PE1 and PE2 devices.

*Figure 17: BVI Interfaces on the CE-Facing Sides in an MPLS 6PE/6VPE Network*

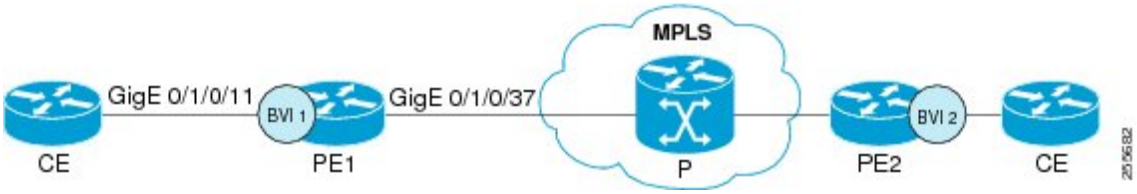


This is a sample configuration only for the Cisco ASR 9000 Series Router (PE1) device with a BVI interface numbered 1 on the CE-facing side, and a non-BVI interface (Gigabit Ethernet 0/1/0/37) on the core-facing side. A similar configuration would apply to the PE2 device:

```
! Be sure to configure IPv6 unicast address families
!
vrf 1
address-family ipv6 unicast
  import route-target
   100:2
  export route-target
   100:2

interface Loopback0
 ipv4 address 10.11.11.11/32
!
! Configure the BVI interface to participate in the VRF
! and with an IPv6 address.
!
interface BVI1
 vrf 1
 ipv6 address 2001:DB8:1/32
!
! Assign the Gigabit Ethernet CE-facing interface to the
! L2VPn bridge domain where the routed BVI interface is also associated.
!
l2vpn
 bridge group 1
  bridge-domain 1
   interface Gigabit Ethernet 0/1/0/11
 routed interface BVI1
!
! Configure OSPF routing for the BVI interface for
! advertisement of its IPv6 address.
!
router ospfv3 1
 graceful-restart
 redistribute bgp 1
 area 1
  interface BVI1
  interface Loopback0
!
! Configure BGP routing and be sure to specify the
! IPv6 unicast address family.
! Note that the per-VRF label allocation mode is required
```

```
! and is the only supported label allocation mode.
!
router bgp 1
 bgp router-id 10.11.11.11
 bgp redistribute-internal
 bgp graceful-restart

 address-family ipv6 unicast
  redistribute ospfv3 1 match internal external
  label-allocation-mode per-vrf
  allocate-label all
 !
 address-family vpnv6 unicast
 !
 neighbor 10.11.12.12
  remote-as 1
  update-source Loopback0
  address-family ipv6 unicast
   route-policy pass-all in
   route-policy pass-all out
  !
  address-family ipv6 labeled-unicast
  !
  address-family vpnv6 unicast
   route-policy pass-all in
   route-policy pass-all out
  !
 vrf 1
  rd 100:2
 label-allocation-mode per-vrf
  address-family ipv6 unicast
   redistribute connected

mpls ldp
 router-id 10.11.11.11
 graceful-restart
 interface Gigabit Ethernet 0/1/0/37
```

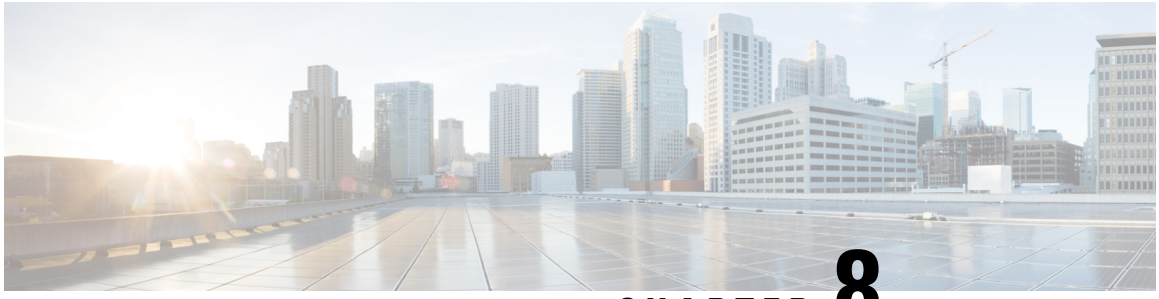

CHAPTER 8

# Configuring Link Bundling

This module describes the configuration of link bundle interfaces on the Cisco ASR 9000 Series Aggregation Services Routers.

A link bundle is a group of one or more ports that are aggregated together and treated as a single link.

Each bundle has a single MAC, a single IP address, and a single configuration set (such as ACLs). POS link bundles do not have mac address, only ethernet link bundles have mac address.

**Note** The Cisco ASR 9000 Series Router supports both Layer 2 and Layer 3 Link Bundles. If the Link Bundle is a Layer 3 interface, an IP address is required. If the Link Bundle is a Layer 2 interface, an IP address is not required. A Link Bundle on the Cisco ASR 9000 Series Router may contain Layer 2 and Layer 3 subinterfaces within it. In which case, the Layer 3 subinterfaces require IP addresses, but the Link Bundle interface does not require an IP address. POS Link bundling is supported only on Layer 3 link bundles.

The Cisco ASR 9000 Series Router supports bundling for these types of interfaces:

- Ethernet interfaces and
- POS interfaces on the ASR 9000 SIP-700 line card.

### Feature History for Configuring Link Bundling

| Release | Modification |
|---|---|
| Release 3.7.2 | This feature was introduced on the Cisco ASR 9000 Series Router. |
| Release 3.9.0 | Support for load balancing was added.<br>Bundle member links are put into new err-disable link interface status and admin-down protocol state when a bundle interface is shut down. |
| Release 3.9.1 | Support for Layer 3 load balancing on Layer 2 link bundles was added. |

| | |
|---|---|
| Release 4.0.0 | The following support was added:<br>• Up to a maximum of 64 member links per bundle.<br>• IPv6 addressing.<br>• Multichassis Link Aggregation. |
| Release 4.0.1 | Support for Dynamic Load Balancing for Link Aggregation (LAG) members was added.<br>The **hw-module load-balance bundle l2-service l3-params** command is replaced by the **load-balancing flow** command in L2VPN configuration mode. For more information see the Cisco ASR 9000 Series Aggregation Services Router L2VPN and Ethernet Services Configuration Guide and Cisco ASR 9000 Series Aggregation Services Router L2VPN and Ethernet Services Command Reference. |
| Release 4.1.0 | Support for Multi-Gigabit Service Control Point was added. |
| Release 4.2.0 | Support for Link bundling for POS interfaces was added. |
| Release 4.3.1 | Support for ICCP Based Service Multihoming was included. |
| Release 5.1.1 | Support for Multichassis Link Aggregation on IPv6 traffic was included. |
| Release 5.1.2 | Support for mixed speed member links in a bundle interface was included. |
| Release 6.0.0 | Bundle scale support increases to 1600 bundles on A9K-RSP880-SE, A99-RP2-SE and the third generation of ASR 9000 Ethernet line card. |
| Release 6.2.2 | Support for Layer 3 Multicast traffic over mixed speed bundles was added. |


- Prerequisites for Configuring Link Bundling, on page 287
- Information About Configuring Link Bundling, on page 287
- How to Configure Link Bundling, on page 304
- Configuring Multichassis Link Aggregation, on page 317
- How to Configure MGSCP, on page 332
- Configuration Examples for Link Bundling, on page 340
- Configuration Examples for MGSCP, on page 347

# Prerequisites for Configuring Link Bundling

You must be in a user group associated with a task group that includes the proper task IDs. The command reference guides include the task IDs required for each command. If you suspect user group assignment is preventing you from using a command, contact your AAA administrator for assistance.

The prerequisites for link bundling depend on the platform on which you are configuring this feature. This section includes the following information:

## Prerequisites for Configuring Link Bundling on a Cisco ASR 9000 Series Router

Before configuring Link Bundling, be sure that the following tasks and conditions are met:

- You know the interface IP address (Layer 3 only).
- You know which links should be included in the bundle you are configuring.
- If you are configuring an Ethernet link bundle, you must have Ethernet line cards installed in the router.

**Note** Link bundling is supported on all flavours of ASR 9000 line cards.

- If you are configuring a POS link bundle, you must have this line card installed in the router:
  - ASR 9K-SIP-700 line card
- The POS link bundling feature is supported on the following shared port adaptors (SPA):
  - 2-port OC-48 POS/SDH SPA
  - 4-port OC-48 POS/SDH SPA
  - 1-port OC-192 POS/XFP SPA
  - 4-port OC-3 POS-V2 SPA
  - 8-port OC-3 POS/SDH SPA
  - 8-port OC-12 POS/SDH SPA

**Note** For more information about physical interfaces, PLIMs, and modular services cards, refer to the *Cisco ASR 9000 Series Router Hardware Installation Guide*.

# Information About Configuring Link Bundling

To configure link bundling, you must understand the following concepts:

# Link Bundling Overview

The Link Bundling feature allows you to group multiple point-to-point links together into one logical link and provide higher bidirectional bandwidth, redundancy, and load balancing between two routers. A virtual interface is assigned to the bundled link. The component links can be dynamically added and deleted from the virtual interface.

The virtual interface is treated as a single interface on which one can configure an IP address and other software features used by the link bundle. Packets sent to the link bundle are forwarded to one of the links in the bundle.

A link bundle is simply a group of ports that are bundled together and act as a single link. The advantages of link bundles are as follows:

- Multiple links can span several line cards to form a single interface. Thus, the failure of a single link does not cause a loss of connectivity.
- Bundled interfaces increase bandwidth availability, because traffic is forwarded over all available members of the bundle. Therefore, traffic can flow on the available links if one of the links within a bundle fails. Bandwidth can be added without interrupting packet flow.

All the individual links within a single bundle must be of the same type.

For example, a bundle can contain all Ethernet interfaces, or it can contain all POS interfaces, but it cannot contain Ethernet and POS interfaces at the same time.

Cisco IOS XR software supports the following methods of forming bundles of Ethernet interfaces:

- IEEE 802.3ad—Standard technology that employs a Link Aggregation Control Protocol (LACP) to ensure that all the member links in a bundle are compatible. Links that are incompatible or have failed are automatically removed from a bundle.
- Ether Channel or POS Channel—Cisco proprietary technology that allows the user to configure links to join a bundle, but has no mechanisms to check whether the links in a bundle are compatible.(EtherChannel applies to Ethernet interfaces, and POS Channel applies to POS interfaces.)

# Features and Compatible Characteristics of Ethernet Link Bundles

This list describes the properties and limitations of ethernet link bundles:

- Any type of Ethernet interfaces can be bundled, with or without the use of LACP (Link Aggregation Control Protocol).
- Bundle membership can span across several line cards that are installed in a single router or multiple routers in the case of MC-LAG.
- An ethernet link bundle can support a maximum of 64 physical links. If you add more than 64 links to a bundle, only 64 of the links are in distributing state, and the remaining links are in waiting state.
- A single Cisco ASR 9000 Series Router supports a maximum of 1600 bundles.
- Cisco ASR 9000 Series Router supports mixed speed bundles. Mixed speed bundles allow member links of different bandwidth to be configured as active members in a single bundle. The ratio of the bandwidth for bundle members must not exceed 10. Also, the total weight of the bundle must not exceed 64. For example, 100Gbps link and 10Gbps links can be active members in a bundle. Mixed speed bundles also allow:

  - Load-balancing on member links based on bandwidth weightage.
  - Support of proportional load-balancing for all unicast flows.
  - Support of load-balancing based on bandwidth weightage for all VPLS flooding and Layer 2 multicast flows.

- Multi-Gigabit Service Control Point (MGSCP) is not supported for mixed speed bundles.
- With mixed speed bundles, the total weight of a bundle is greater than the number of members in the bundle, as the weight represents the smallest active number bandwidth.
- The weight of each bundle member is the ratio of its bandwidth to the lowest bandwidth member. Total weight of the bundle is the sum of weights or relative bandwidth of each bundle member. Since the weight for a bundle member is greater than or equal to 1 and less than or equal to 10, the total member of links in a bundle is less than 64 in mixed bundle case.
- Mixed speed bundles are supported in MC-LAG.
- Physical layer and link layer configuration are performed on individual member links of a bundle.
- Configuration of network layer protocols and higher layer applications is performed on the bundle itself.
- IPv4 and IPv6 addressing is supported on ethernet link bundles.
- A bundle can be administratively enabled or disabled. Beginning in Cisco IOS XR Release 3.9.0, when you shut down a bundle interface, the member links are put into err-disable link interface status and admin-down line protocol state. You can show the status of a bundle interface and its members using the **show interfaces** command.
- Each individual link within a bundle can be administratively enabled or disabled.
- Ethernet link bundles are created in the same way as Ethernet channels, where the user enters the same configuration on both end systems.
- The MAC address that  is set on the bundle becomes the MAC address of the links within that bundle.
- When LACP configured, each link within a bundle can be configured to allow different keepalive periods on different members.
- Load balancing (the distribution of data between member links) is done by flow instead of by packet. Data is distributed to a link in proportion to the bandwidth of the link in relation to its bundle.
- QoS is supported and is applied proportionally on each bundle member.
- Link layer protocols, such as CDP and HDLC keepalives, work independently on each link within a bundle.
- Upper layer protocols, such as routing updates and hellos, are sent over any member link of an ethernet interface bundle.
- All links within a single bundle must terminate on the same two systems. Both systems must be directly connected except in the case of MC-LAG.
- Bundled interfaces are point-to-point.
- A link must be in the up state before it can be in distributing state in a bundle.

- All links within a single bundle must be configured either to run 802.3ad (LACP) or Etherchannel (non-LACP). Mixed links within a single bundle are not supported.
- A bundle interface can contain physical links and VLAN subinterfaces only. Tunnels cannot be bundle members.
- Access Control List (ACL) configuration on link bundles is identical to ACL configuration on regular interfaces.
- Multicast traffic is load balanced over the members of a bundle. For a given flow, the control plane selects the member link, and all traffic for that flow is sent over that member. The system supports Layer 3 Multicast traffic over mixed speed bundles.
- When the LACP system receives priority value as zero (0) from a remote device, bundle does not come up.

## Characteristics of POS Link Bundles in Cisco ASR 9000 Series Router

This section lists the properties of POS link bundles that are specific to Cisco ASR 9000 Series Router:

- Each bundle has to be configured between a pair of directly connected systems.
- All members of a bundle must be POS.
- The Cisco ASR 9000 SIP-700 line card can physically accommodate upto 32 POS link bundles.
- POS link bundling can support up to 32 physical links if they are in the same speed. If links are in different speed, it cannot reach 32 physical links.
- Only physical interfaces can become bundle members.
- All bundles must be statically configured.
- Only cHDLC encapsulation type is currently supported on POS Link Bundle.
- Only POS SPA is supported for POS Link Bundling and not channelized SPA.
- Upper layer protocols, such as routing updates and hellos, are sent over through the bundle interface.
- Bandwidths for policers and queues must be in percentage and not in absolute values.
- Queue-limit must be in time unit and not in bytes.
- For POS link bundles, different link speeds are allowed within a single bundle, with a maximum of four times the speed difference between the members of the bundle. This means that only up to 4 times the bandwidth ratio is supported.

## Restrictions of POS Link Bundles in Cisco ASR 9000 Series Router

This section lists the limitations of POS link bundles that are specific to Cisco ASR 9000 Series Router:

- LACP is not supported for POS link bundles in Cisco IOS XR Release 4.2.0 and later releases.
- IPv6 and ACL are not supported for POS link bundels in Cisco IOS XR Release 4.2.0.
- Multicast routing is not supported for POS link bundles in Cisco IOS XR Release 4.2.0.

# Link Aggregation Through LACP

The optional Link Aggregation Control Protocol (LACP) is defined in the IEEE 802 standard. LACP communicates between two directly connected systems (or peers) to verify the compatibility of bundle members. For the Cisco ASR 9000 Series Router, the peer can be either another router or a switch. LACP monitors the operational state of link bundles to ensure the following:

- All links terminate on the same two systems.
- Both systems consider the links to be part of the same bundle.
- All links have the appropriate settings on the peer.

LACP transmits frames containing the local port state and the local view of the partner system's state. These frames are analyzed to ensure both systems are in agreement.

## IEEE 802.3ad Standard

The IEEE 802.3ad standard typically defines a method of forming Ethernet link bundles.

For each link configured as bundle member, the following information is exchanged between the systems that host each end of the link bundle:

- A globally unique local system identifier
- An identifier (operational key) for the bundle of which the link is a member
- An identifier (port ID) for the link
- The current aggregation status of the link

This information is used to form the link aggregation group identifier (LAG ID). Links that share a common LAG ID can be aggregated. Individual links have unique LAG IDs.

The system identifier distinguishes one router from another, and its uniqueness is guaranteed through the use of a MAC address from the system. The bundle and link identifiers have significance only to the router assigning them, which must guarantee that no two links have the same identifier, and that no two bundles have the same identifier.

The information from the peer system is combined with the information from the local system to determine the compatibility of the links configured to be members of a bundle.

Bundle MAC addresses in the Cisco ASR 9000 Series Router come from a set of reserved MAC addresses in the backplane.This MAC address stays with the bundle as long as the bundle interface exists. The bundle uses this MAC address until the user configures a different MAC address. The bundle MAC address is used by all member links when passing bundle traffic. Any unicast or multicast addresses set on the bundle are also set on all the member links.

**Note** We recommend that you avoid modifying the MAC address, because changes in the MAC address can affect packet forwarding.

# Multichassis Link Aggregation

The Multichassis Link Aggregation (MC-LAG) feature provides an end to end interchassis redundancy solution for the Carrier Ethernet Networks. MC-LAG involves two devices collaborating to act as a single LAG from the perspective of a (third) connected device, thus providing device-level as well as link-level redundancy.

To achieve this, two devices co-ordinate with each other to present a single LACP bundle (spanning the two devices) to a partner device. Only one of the devices forwards traffic at any one time, eliminating the risk of forwarding loops. When a failure occurs, these devices coordinate to perform a switchover, changing the device on which traffic is being forwarded by manipulating the link LACP states.

The existing pseudowire redundancy in the core network coordinates with the redundancy in the access network based on:

- Multichassis Link Aggregation Control Protocol (mLACP)
- Interchassis Communication Protocol (ICCP)

The mLACP protocol defines the expected behavior between the two devices and uses the Interchassis Control Protocol (ICCP) to exchange TLVs and identify peer devices to operate with. At the edge of a provider's network, a simple customer edge (CE) device that only supports standard LACP is connected to two provider edge (PE) devices. Thus the CE device is dual-homed, providing better L2 redundancy from the provider's side. In mLACP terminology, the CE device is referred to as a dual-homed device (DHD) and each PE device is known as a point of attachment (POA). The POA forwarding traffic for the bundle is the active device for that bundle, while the other POA is the standby device.

# Failure Cases

MC-LAG provides redundancy, switching traffic to the unaffected POA while presenting an unchanged bundle interface to the DHD, for these failure events:

- Link failure: A port or link between the DHD and one of the POAs fails.
- Device failure: Meltdown or reload of one of the POAs, with total loss of connectivity (to the DHD, the core and the other POA).
- Core isolation: A POA loses its connectivity to the core network, and therefore is of no value, being unable to forward traffic to or from the DHD.

A loss of connectivity between the POAs leads both devices to assume that the other has experienced device failure, causing them to attempt to take on the Active role. This is known as a split brain scenario and can happen in either of the following cases:

- All other connectivity remains; only the link between POAs is lost.
- One POA is isolated from the core network (i.e. a core isolation scenario where the connection between the two POAs was over the core network).

MC-LAG by itself does not provide a means to avoid this situation; resiliency in the connection between the POAs is a requirement. The DHD is given the responsibility of mitigating the problem by setting a limit on the number of links, within the bundle, that can be active. As such only the links connected to one of the POAs can be active at any one point of time.

# Interchassis Communication Protocol

This figure shows the graphical representation of the Interchassis Communication Protocol (ICCP).

***Figure 18: ICCP Protocol***

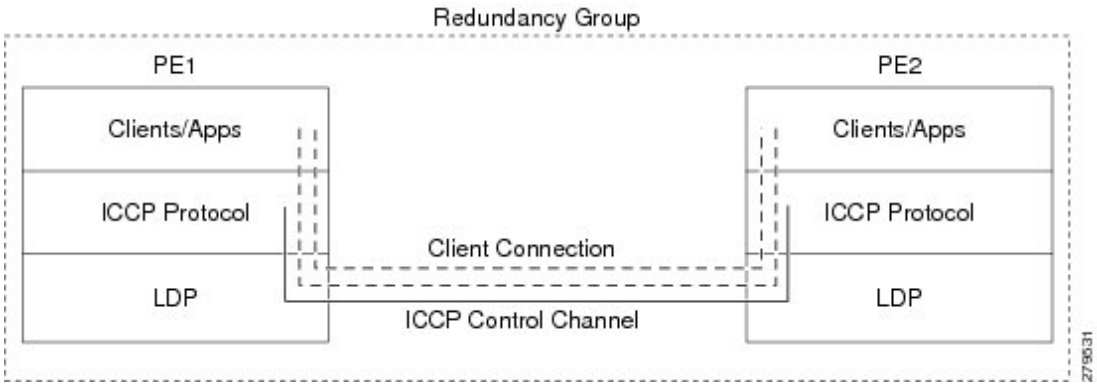


Two POAs communicate with each other over an LDP link using the Interchassis Communication Protocol (ICCP). ICCP is an LDP based protocol wherein an LDP session is created between the POAs in a redundancy group, and the ICCP messages are carried over that LDP session. The PE routers in a redundancy group may be a single-hop (directly connected) or a multi-hop away from one another. The ICCP protocol manages the setup and controls the redundancy groups. It also establishes, maintains, and tears down ICCP connections. The ICCP protocol uses route-watch to monitor the connectivity to the PEs in a given redundancy group. It is also responsible for tracking core isolation failures. It notifies all client applications of failure (core isolation and active PE failure).

To operate ICCP, the devices are configured as members of redundancy groups (RGs).

**Note** In the mLACP configuration, two devices are configured to be members of each RG (until a device-level failure occurs leaving only a single member). However, each device can be a member of more than one RG.

In each redundancy group, a POA's mLACP peer is the other POA in that group, with which it communicates using mLACP over ICCP. For each bundle, the POA and DHD at each end are LACP partners, communicating using the standard LACP protocol.

# Access Network Redundancy Model

The Multichassis Link Aggregation Control Protocol (mLACP) based redundancy between the customer edge device (CE) or access network and the provider edge (PE) device is achieved by allowing the CE to be connected to two PE routers. The two PE routers synchronize the data through ICCP; therefore they appear as a single device to the CE.

*Figure 19: mLACP/ICCP Redundancy Model*

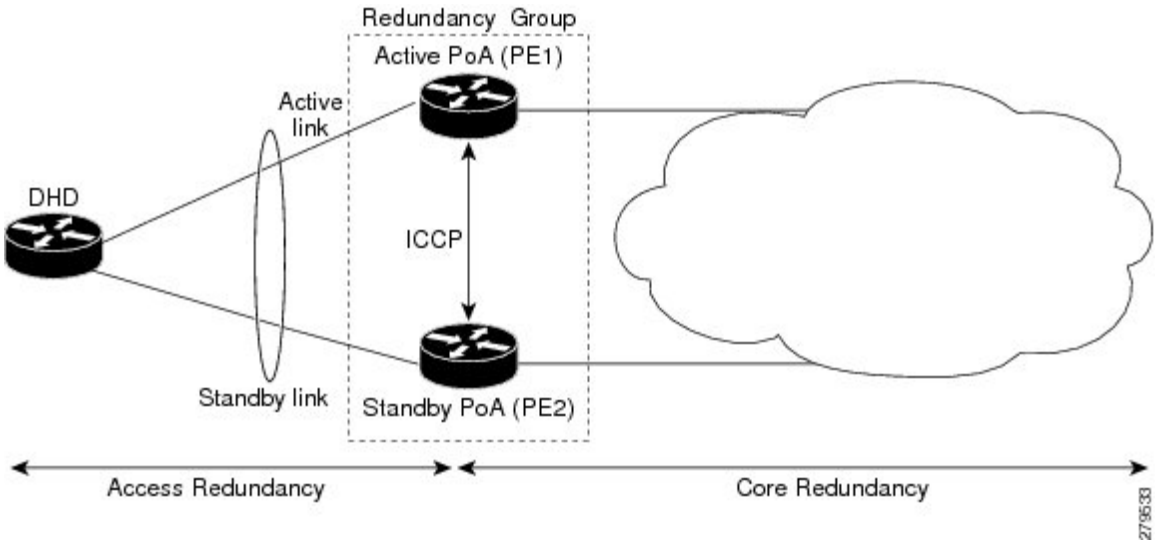


The CE is also called dual-homed device (DHD) and the PE is also called point of attachment (POA). The pair of POAs that is connected to the single DHD forms a redundancy group (RG).

At any given time, only one POA is active for a bundle. Only the set of links between the DHD and the active POA actively sends traffic. The set of links between the DHD and the standby POA does not forward traffic. When the multichassis link bundle software detects that the connection to the active POA has failed, the software triggers the standby POA to become the active POA, and the traffic flows using the links between the DHD and newly active POA.

**Note** When the connection to the active POA fails and the active POA is in the Negotiation state, the standby POA does not take over.

The ICCP protocol operates between the active and the standby POAs, and allows the POAs to coordinate their configuration, determine which POA is active, and trigger a POA to become active. Applications running on the two POAs (mLACP, IGMP snooping, DHCP snooping or ANCP) synchronize their state using ICCP.

**Note** While upgrading to a newer version of ASR 9000 router, ensure that you upgrade the active and standby nodes to the same version.

# ICCP Based Service Multihoming

In the case of ICCP based Service Multihoming (ICCP-SM), the CE device uses two independent bundle interfaces to connect to the PoAs. Although bundle interfaces are used, they are not aggregated across the two chassis, and mLACP is not involved in the communication. The CE device configures the bundle interfaces in such a manner that all VLANs are allowed on both bundles. You can manually configure the PoAs to distribute the VLANs across the two bundles in order that individual VLANs are active(forwarding) on one bundle or PoA, and standby (blocked) on the other. The CE device initially floods a traffic flow on both bundles and learns the MAC address on the interface where it receives the response.

With ICCP-SM, you are not limited to a dual homed device. The access links can connect to a dual homed network (DHN) that are separate devices in the access network. The two bundles on the DHD or the DHN must be in a bridge domain so that L2 learning selects the link with the active set of VLANs.

***Figure 20: ICCP Based Service Multihoming***

If a bundle interface between the CE and the PoA fails, ICCP-SM on the PoA with the failed bundle communicates through ICCP to the other PoA's ICCP-SM. This activates the standby VLANs on the remaining bundle. A MAC flush is sent to the CE so that packets destined to hosts on the failed bundle are again flooded, in order to be learned on the newly activated bundle. The MAC flush is required because it is possible that the bundle interface failure is not detected by the CE.

In ICCP Based Service Multihoming, the total set of VLANs are split into a primary set and a secondary set and are configured on each PoA such that the primary set on one PoA is configured as secondary on the other. On each PoA, the VLANs are associated with ACs. If the VLANs are primary on a PoA and there are no faults, the associated ACs are set to forwarding. If the VLANs are secondary on a PoA, the associated ACs are blocked. ICCP-SM is only supported in VPLS cores.

# ICCP-SM Redundancy Group

Prior to Release 6.4.1, ICCP-SM configurations were required to match on both peers for traffic flow. Primary VLANs on one PoA were configured as secondary VLANs on the other. If there was a mismatch in VLAN configuration, all primary and secondary VLANs were blocked. Also, when a user configured a new VLAN, there was a temporary mismatch which blocked other services until the VLAN configuration on both sides matched.

Starting from Release 6.4.1, when there is a mismatch in VLAN configuration on PoAs, instead of blocking all primary and secondary VLANs, only unmatched VLANs are blocked. That is, if at least one primary VLAN on one PoA matches the secondary VLAN on the other PoA, traffic flows. If misconfiguration is detected while there is no port failure, each PoA re-evaluates the configuration. The PoAs move misconfigured VLANs to the secondary VLAN list while the primary VLANs forward traffic. The misconfigured VLAN list also includes those VLANs that are only configured remotely. For example, if VLAN 1 is only configured on remote PoA and is not configured locally, VLAN 1 will still be in the secondary list locally.

When two PoAs are connected, if one PoA has been configured with Release 6.4.1 image and the other PoA has been configured with an image earlier to Release 6.4.1, the behavior of the PoAs with respect to forwarding and blocking the traffic is different from each other. The PoA with an image earlier to Release 6.4.1 blocks all VLANs when there is a mismatch in VLAN configuration. The PoA with Release 6.4.1 image forwards primary VLANs that are matched in secondary list on the peer PoA.

# Advantages of Pseudo mLACP:

Pseudo mLACP has these three major advantages over mLACP:

- Pseudo mLACP can support a Dual Homed Network (DHN), while mLACP can only support a Dual Homed Device (DHD).
- Pseudo mLACP supports per-VLAN active/active redundancy without any load-balancing requirements on the CE.
- Pseudo mLACP does not require LACP support from the DHD, or DHN. It is independent of the access redundancy mechanism; therefore, it provides a network based redundancy solution. It allows maximum flexibility for the PE-CE interoperability in terms of dual-homing redundancy and recovery.

# Failure Modes

The mLACP feature provides network resiliency by protecting against port, link, and node failures. This figure depicts the various failure modes.

***Figure 21: Failure Modes***

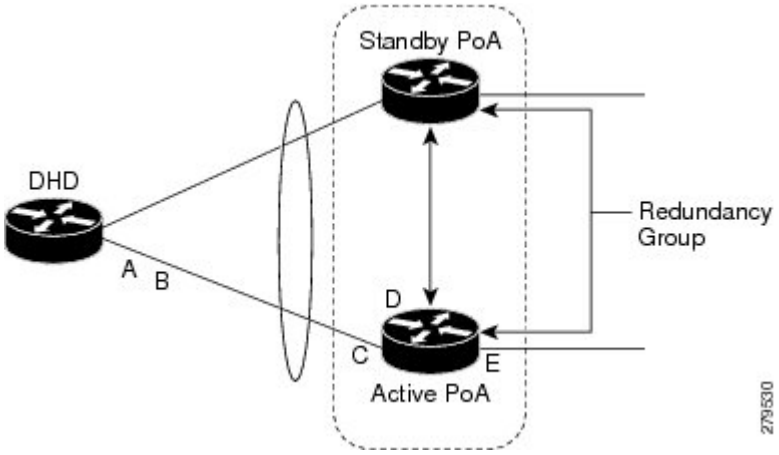


These are the failure categories:

- A—DHD uplink port failure. The port on the DHD that is connected to the POA fails.
- B—DHD uplink failure. The connection between the DHD and the POA fails.
- C—Active POA downlink port failure.
- D—Active POA node failure.
- E—Active POA uplink failure (network isolation). The links between the active POA and the core network fails

**Note** ICCP Based Service Multihoming is similar to MC-LAG in the case of core network failures. It is revertive in nature. In the case of a failure, the PoA whose link has been restored activates the VLANs that are configured as primary.

# Core Network Redundancy Model

This section explains:

# One-way Pseudowire Redundancy

This figure shows the VPWS one-way pseudowire redundancy model. Only one end of the pseudowire is protected by a backup pseudowire.

*Figure 22: VPWS one-way Pseudowire Redundancy*

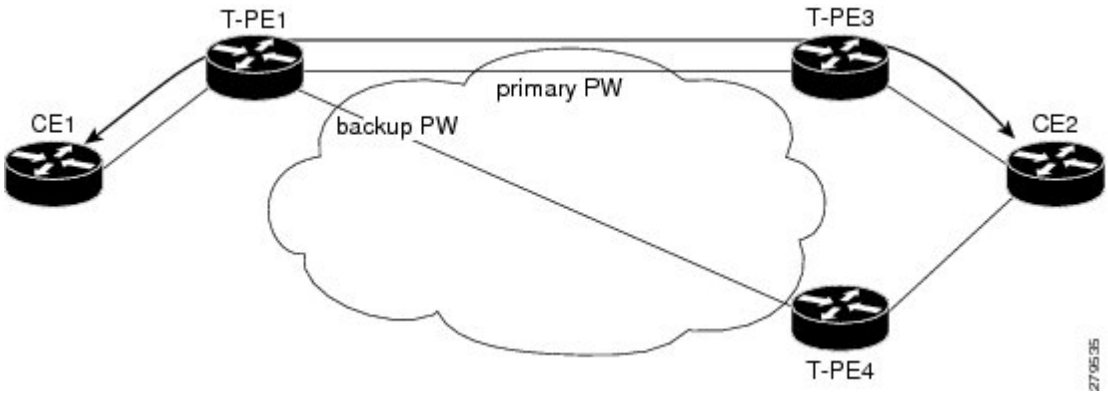


# Two-way Pseudowire Redundancy

This figure shows the VPWS two-way pseudowire redundancy model. In this topology, each T-PE at the end of a PW has a primary and a backup PW. The state of the PW is coordinated with the state of the mLACP link between the DHD and the PE.

*Figure 23: VPWS two-way Pseudowire Redundancy*

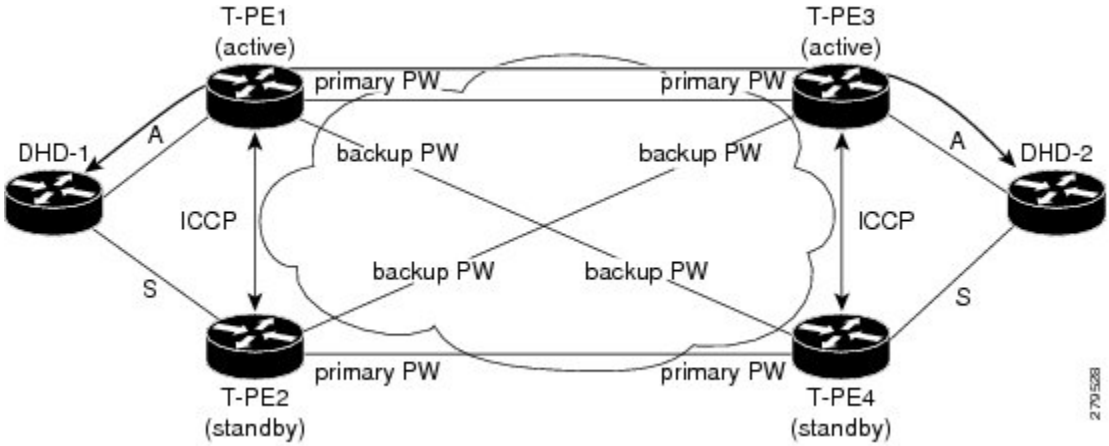


# Switchovers

Switchovers, which is changing the Active/Standby roles of the POAs, are performed using dynamic priority management or brute force behavior.

# Dynamic Priority Management

Dynamic Priority Management involves co-ordination between the POAs to manipulate the LACP port priorities of their member links. Two priority values are tracked for each links:

- A configured priority which can either be configured explicitly, or defaults to 32768

- An operational priority used in LACP negotiations, which may differ from the configured priority if switchovers have occurred.

Higher priority LACP links are always selected ahead of lower priority LACP links. This means the operational priorities can be manipulated to force the standard LACP Selection Logic (on the POAs and on the DHD) to select desired links on both ends.

For example, consider a case where the DHD has two links to each POA, and each POA is configured with minimum-active links is 2. (This means the bundle goes down on the POA if the number of active links falls below 2.) The operational priorities for the member links are 1 on POA-1 and 2 on POA-2. This means that POA-1 is active (being higher priority) and the links on POA-2 are held in Standby state. The sequence of events in a switchover is as follows:

1. A link fails on POA-1, causing the number of active links to fall below the minimum of 2.
2. POA-1 changes the operational priority of both its links to 3, so the links on POA 2 are now higher priority.
3. POA-1 sends a LACP message to the DHD and an mLACP message to POA-2, informing both devices of the change.
4. The DHD tries to activate the links connected to POA-2 as these now have the highest priority.
5. POA-2 also ensures that its links have the highest priority and activates its links to the DHD.

At this point the switchover is complete.

# Brute Force Behavior

In a brute force switchover, port priorities are not modified. Instead the failing POA sends a single *dying gasp* to the DHD over LACP, forcing it to deselect the link. It then terminates LACP communications on that link. This only leaves links between the DHD and POA-2, as links that can be selected. So, both ends select those links.

# MC-LAG Topologies

This section illustrates the supported MC-LAG topologies.

***Figure 24: VPWS One-way Pseudowire Redundancy in Redundancy Group***

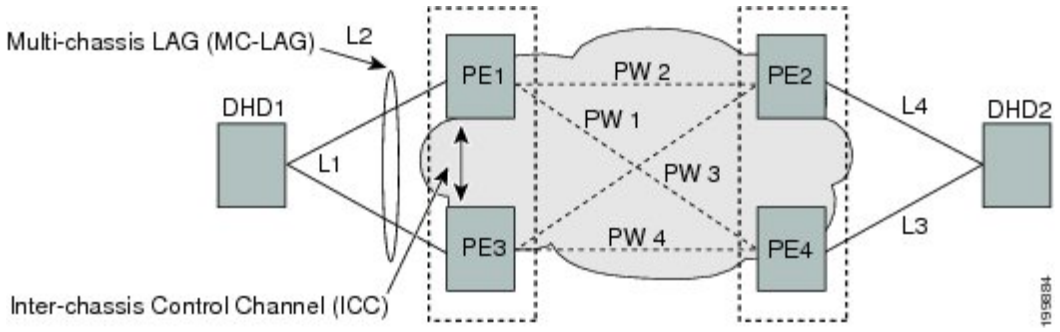

*Figure 25: VPWS Two-way Pseudowire Redundancy*

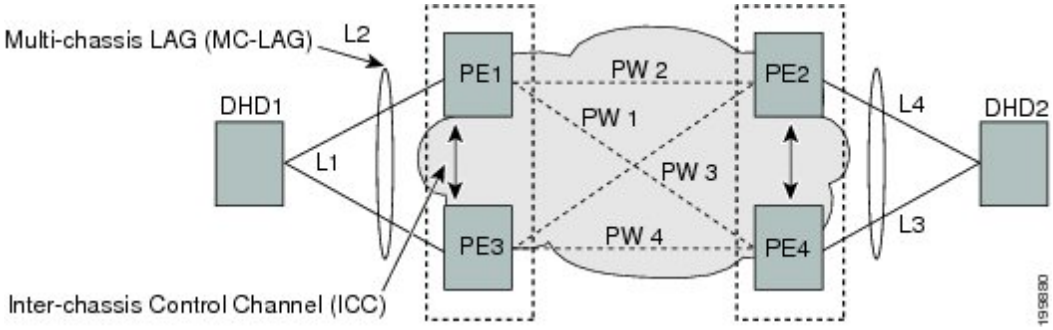


*Figure 26: VPLS Pseudowires in One Redundancy Group*

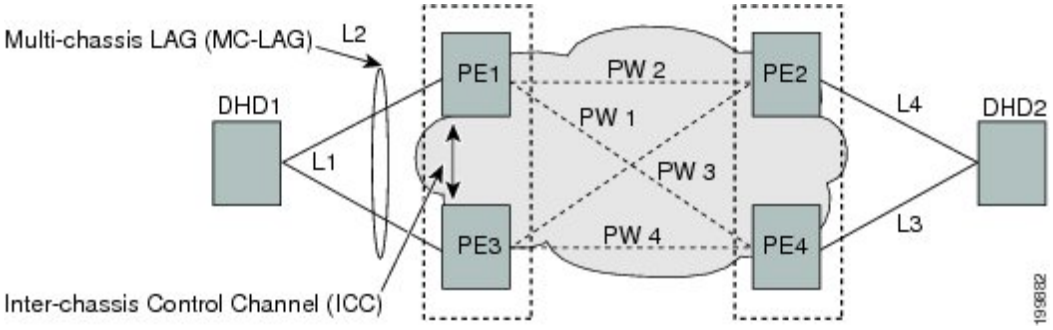


*Figure 27: VPLS Pseudowires in Two Redundancy Groups*

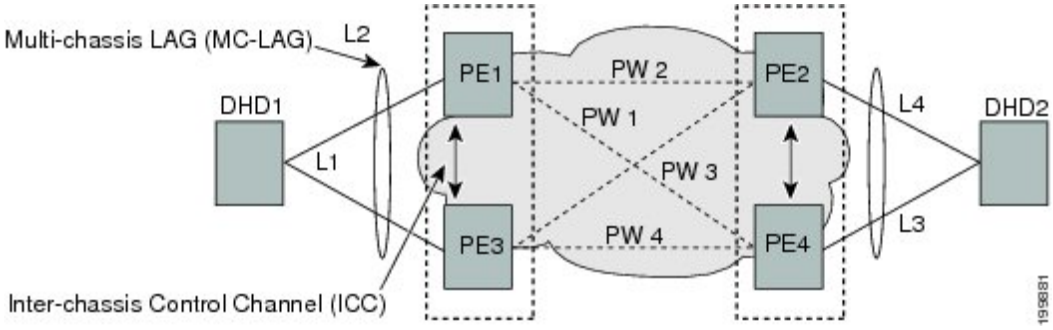


# LACP Short Period Time Intervals

## Load Balancing

Load balancing is a forwarding mechanism that distributes traffic over multiple links based on certain parameters. The Cisco ASR 9000 Series Router supports load balancing for all links in a bundle using Layer 2, Layer 3, and Layer 4 routing information.

This section describes load balancing support on link bundles.

For more information about other forms of load balancing on the Cisco ASR 9000 Series Router, see the following references:

- Per-flow load balancing on non-bundle interfaces using Layer 3 and 4 routing information— See the Cisco ASR 9000 Series Aggregation Services Router IP Addresses and Services Configuration Guide.
- Pseudowire (PW) Load Balancing beginning in Cisco IOS XR 4.0.1—See the Cisco ASR 9000 Series Aggregation Services Router L2VPN and Ethernet Services Configuration Guide.

## Layer 2 Ingress Load Balancing on Link Bundles

By default, load balancing on Layer 2 link bundles is done based on the MAC source and destination address (SA/DA) fields in the incoming packet header. Table 8: Bundle Load Balancing for Incoming Traffic shows a summary of the parameters used for load balancing of incoming traffic at Layer 2 based on whether the default mode, EFP-based, or flow-based load balancing is in use.

Per-flow load balancing is supported on all links in the bundle. This scheme achieves load sharing by allowing the router to distribute packets over one of the links in the bundle, that is determined through a hash calculation. The hash calculation is an algorithm for link selection based on certain parameters.

The standard hash calculation is a 5-tuple hashing, using the following parameters:

- IP source address
- IP destination address
- Router ID
- Layer 4 source port
- Layer 4 destination port

When per-flow load balancing is enabled, all packets for a certain source-destination pair will go through the same link, though there are multiple links available. Per-flow load balancing ensures that packets for a certain source-destination pair arrive in order.

**Note** Load balancing for multicast traffic applies only when outgoing interfaces are link bundle interfaces or subinterfaces.

***Table 8: Bundle Load Balancing for Incoming Traffic***

| Ingress Unicast, Flood, or Multicast Traffic | Parameters | Configuration |
|---|---|---|
| Default | • Source MAC address<br>• Destination MAC address | n/a |
| EFP-based auto mode | XID of the xconnect | Auto mode is enabled using the **bundle load-balancing hash auto** command. |
| EFP-based with user hash | User hash | A user hash is configured using the **bundle load-balancing** *hash-value* command. |

| Ingress Unicast, Flood, or Multicast Traffic | Parameters | Configuration |
|---|---|---|
| Flow-based with IP source and destination | • Source IP address<br>• Destination IP address | Enabled using the L2VPN **load-balancing flow src-dst-ip** command. |
| Flow-based with MAC source and destination | • Source MAC address<br>• Destination MAC address | Enabled using the L2VPN **load-balancing flow src-dst-mac** command. |

## Layer 3 Egress Load Balancing on Link Bundles

Layer 3 load balancing support began on the Cisco ASR 9000 Series Router in Cisco IOS XR 3.9.1, with changes introduced in Cisco IOS XR Release 4.0.1.

## Layer 3 Load Balancing Before Cisco IOS XR Release 4.0.1

In Cisco IOS XR 3.9.1 through Cisco IOS XR 4.0, Layer 3 load balancing for link bundles is done on Ethernet Flow Points (EFPs) and is based on the IPv4 source and destination addresses in the packet. When Layer 3 service-specific load balancing is configured, all egressing bundles are load balanced based on the IPv4 source and destination addresses. When packets do not have IPv4 addresses, default load-balancing is used.

Layer 3 load balancing for link bundles is enabled globally, using the following command:

**hw-module load-balance bundle l2-service l3-params**

## Layer 3 Load Balancing Beginning in Cisco IOS XR Release 4.0.1

Layer 3 load balancing for link bundles is done when outgoing interfaces are either bundles or bundle subinterfaces. 5-tuple hashing is used for load balancing among bundle member links, using the following parameters:

- IP source address
- IP destination address
- Router ID
- Layer 4 source port
- Layer 4 destination port

The ingress linecard does bundle member selection and forwards the packet to the linecard and network processor (NP) corresponding to the selected bundle member. The same hash value is used for both ingress and egress linecards. Therefore, even though the egress linecard also does bundle member selection, it selects the same bundle member that was selected by the ingress linecard.

### Multicast IPv4 and IPv6 Traffic

For outbound multicast IPv4 or IPv6 traffic, a set of egress linecards is predetermined by the system. If a bundle interface or bundle subinterface is an outgoing interface, the system selects the bundle member for each outgoing interface in a route based on the multicast group address. This helps with load distribution of

multicast routed traffic to different bundle members, while providing traffic sequencing within a specific route.

The egress linecard does NP selection using the same approach, when bundle members are spread across multiple NPs within the egress linecard.

When the packet arrives on an egress NP, it uses the 5-tuple hash to select a bundle member within an NP for each packet. This provides better resiliency for bundle member state changes within an NP.

### Dynamic Load Balancing for LAG

Beginning in Cisco IOS XR Release 4.0.1, the Cisco ASR 9000 Series Router supports a method of dynamic load balancing among link aggregation (LAG) members. With dynamic load balancing, the hash algorithms for link selection include up to a maximum of 64 links, and are based on the current number of active members in the bundle.

## QoS and Link Bundling

On the Cisco ASR 9000 Series Router, when QoS is applied on the bundle for either the ingress or egress direction, QoS is applied at each member interface. For complete information on configuring QoS on link bundles on the Cisco ASR 9000 Series Router, refer to the *Cisco ASR 9000 Series Aggregation Services Router Modular Quality of Service Configuration Guide* and the *Cisco ASR 9000 Series Aggregation Services Router Modular Quality of Service Command Reference*.

## VLANs on an Ethernet Link Bundle

802.1Q VLAN subinterfaces can be configured on 802.3ad Ethernet link bundles. Keep the following information in mind when adding VLANs on an Ethernet link bundle:

- The maximum number of VLANs allowed per bundle is 4096.
- The maximum number of bundled VLANs allowed per router is 16384.

**Note** The memory requirement for bundle VLANs is slightly higher than standard physical interfaces.

To create a VLAN subinterface on a bundle, include the VLAN subinterface instance with the **interface Bundle-Ether** command, as follows:

**interface Bundle-Ether** *interface-bundle-id.subinterface*

After you create a VLAN on an Ethernet link bundle, all VLAN subinterface configuration is supported on that link bundle.

VLAN subinterfaces can support multiple Layer 2 frame types and services, such as Ethernet Flow Points - EFPs) and Layer 3 services.

Layer 2 EFPs are configured as follows:

```
interface bundle-ether instance.subinterface l2transport. encapsulation dot1q xxxxx
```

Layer 3 VLAN subinterfaces are configured as follows:

```
interface bundle-ether instance.subinterface, encapsulation dot1q xxxxx
```

**Note** The difference between the Layer 2 and Layer 3 interfaces is the **l2transport** keyword. Both types of interfaces use **dot1q encapsulation**.

# Link Bundle Configuration Overview

The following steps provide a general overview of the link bundle configuration process. Keep in mind that a link must be cleared of all previous network layer configuration before it can be added to a bundle:

1. In global configuration mode, create a link bundle. To create an Ethernet link bundle, enter the **interface Bundle-Ether** command.
2. Assign an IP address and subnet mask to the virtual interface using the **ipv4 address** command.
3. Add interfaces to the bundle you created in Step 1 with the **bundle id** command in the interface configuration submode.

   You can add up to 64 links to a single bundle.

**Note** A link is configured as a member of a bundle from the interface configuration submode for that link.

# Nonstop Forwarding During Card Failover

Cisco IOS XR software supports nonstop forwarding during failover between active and standby paired RSP cards. Nonstop forwarding ensures that there is no change in the state of the link bundles when a failover occurs.

For example, if an active RSP fails, the standby RSP becomes operational. The configuration, node state, and checkpoint data of the failed RSP are replicated to the standby RSP. The bundled interfaces will all be present when the standby RSP becomes the active RSP.

**Note** Failover is always onto the standby RSP.

You do not need to configure anything to guarantee that the standby interface configurations are maintained.

# Link Failover

When one member link in a bundle fails, traffic is redirected to the remaining operational member links and traffic flow remains uninterrupted.

# Multi-Gigabit Service Control Point

Multi-Gigabit Service Control Point (MGSCP) is a deployment model that uses certain link bundling and forwarding features on the Cisco ASR 9000 Series Aggregation Services Routers to support load balancing, clustering, and redundancy for broadband subscriber traffic on Cisco Service Control Engine (SCE) devices.

The Cisco SCE platform is used to provide many services such as user authorization, reporting, and application bandwidth metering for broadband subscribers. It manages IP traffic using a stateful processing mechanism based on application and subscriber awareness. Maintaining this statefulness requires that the SCE platform captures both the upstream and downstream flows of a session to classify it and provide Layer 7 processing at the application level.

To process an application that is implemented with a bundle of flows, such as FTP or Session Initiation Protocol (SIP), the SCE platform needs to process all the flows that comprise a session of this application. In addition, when the SCE platform is configured to implement per subscriber reporting or control (sometimes referred to as *subscriber awareness*), it must process all traffic flows that a given subscriber generates.

Because of this stateful processing to the subscriber level, the SCE platform is implemented in a network with a “bump-in-the-wire” topology for Layer 2 and Layer 3 transparency. However, as the number of broadband subscribers increases along with the bandwidth that an SCE platform must support, scaling the solution presents certain challenges when inserted into a typical network environment where asymmetric routing is often implemented and the two directions of a single session, or the many flows of a specific subscriber, could be split between different links.

The MGSCP solution on the Cisco ASR 9000 Series Router satisfies these requirements by providing a topology to scale multiple SCE devices in a cluster that are connected to the router using link bundling, where all subscriber traffic can be directed through the same bundle member link. In addition, MGSCP also provides the benefits of load balancing and redundancy.

This figure shows a basic network topology for MGSCP with a Cisco ASR 9000 Series Router connected between the subscriber and core networks, and acting as a dispatcher for the attached SCE cluster. The N+1 notation indicates one backup (or protect) link for the other active links on either side of the SCEs.

***Figure 28: Basic MGSCP Network Topology***

# How to Configure Link Bundling

This section contains the following procedures:

## Configuring Ethernet Link Bundles

This section describes how to configure an Ethernet link bundle.

**Note** In order for an Ethernet bundle to be active, you must perform the same configuration on both connection endpoints of the bundle.

### SUMMARY STEPS

1. **configure**
2. **interface Bundle-Ether** *bundle-id*

3. **ipv4 address** *ipv4-address mask*
4. **bundle minimum-active bandwidth** *kbps*
5. **bundle minimum-active links** *links*
6. **bundle maximum-active links** *links* [**hot-standby**]
7. **lacp fast-switchover**
8. **exit**
9. **interface** {**GigabitEthernet** | **TenGigE**} interface-path-id
10. **bundle id** *bundle-id* [**mode** {**active** | **on** | **passive**}]
11. **bundle port-priority** *priority*
12. **no shutdown**
13. **exit**
14. **bundle id** *bundle-id* [**mode** {**active** | **passive** | **on**}] **no shutdown exit**
15. **end** or **commit**
16. **exit**
17. **exit**
18. Perform Step 1 through Step 15 on the remote end of the connection.
19. **show bundle Bundle-Ether** *bundle-id*
20. **show lacp bundle Bundle-Ether** *bundle-id*

## DETAILED STEPS

| | Command or Action | Purpose |
|---|---|---|
| **Step 1** | **configure**<br>**Example:**<br>`RP/0/RSP0/CPU0:router# configure` | Enters global configuration mode. |
| **Step 2** | **interface Bundle-Ether** *bundle-id*<br>**Example:**<br>`RP/0/RSP0/CPU0:router#(config)# interface Bundle-Ether 3` | Creates a new Ethernet link bundle with the specified bundle-id. The range is 1 to 65535.<br>This **interface Bundle-Ether** command enters you into the interface configuration submode, where you can enter interface specific configuration commands are entered. Use the **exit** command to exit from the interface configuration submode back to the normal global configuration mode. |
| **Step 3** | **ipv4 address** *ipv4-address mask*<br>**Example:**<br>`RP/0/RSP0/CPU0:router(config-if)# ipv4 address 10.1.2.3 255.0.0.0` | Assigns an IP address and subnet mask to the virtual interface using the **ipv4 address** configuration subcommand.<br>**Note** • On the Cisco ASR 9000 Series Router, only a Layer 3 bundle interface requires an IP address. |
| **Step 4** | **bundle minimum-active bandwidth** *kbps*<br>**Example:** | (Optional) Sets the minimum amount of bandwidth required before a user can bring up a bundle. |

| | Command or Action | Purpose |
|---|---|---|
| | `RP/0/RSP0/CPU0:router(config-if)# bundle minimum-active bandwidth 580000` | |
| **Step 5** | **bundle minimum-active links** *links*<br>**Example:**<br>`RP/0/RP0/CPU0:router(config-if)# bundle minimum-active links 2` | (Optional) Sets the number of active links required before you can bring up a specific bundle. |
| **Step 6** | **bundle maximum-active links** *links* [**hot-standby**]<br>**Example:**<br>`RP/0/RSP0/CPU0:router(config-if)# bundle maximum-active links 1 hot-standby` | (Optional) Implements 1:1 link protection for the bundle, which causes the highest-priority link in the bundle to become active and the second-highest-priority link to become the standby. Also, specifies that a switchover between active and standby LACP-enabled links is implemented per a proprietary optimization.<br>**Note** • The priority of the active and standby links is based on the value of the **bundle port-priority** command. |
| **Step 7** | **lacp fast-switchover**<br>**Example:**<br>`RP/0/RSP0/CPU0:router(config-if)# lacp fast-switchover` | (Optional) If you enabled 1:1 link protection (you set the value of the **bundle maximum-active links** command to 1) on a bundle with member links running LACP, you can optionally disable the wait-while timer in the LACP state machine. Disabling this timer causes a bundle member link in standby mode to expedite its normal state negotiations, thereby enabling a faster switchover from a failed active link to the standby link. |
| **Step 8** | **exit**<br>**Example:**<br>`RP/0/RSP0/CPU0:router(config-if)# exit` | Exits interface configuration submode for the Ethernet link bundle. |
| **Step 9** | **interface** {**GigabitEthernet** \| **TenGigE**} interface-path-id<br>**Example:**<br>`RP/0/RSP0/CPU0:router(config)# interface GigabitEthernet 1/0/0/0` | Enters interface configuration mode for the specified interface.<br>Enter the **GigabitEthernet** or **TenGigE** keyword to specify the interface type. Replace the *interface-path-id* argument with the node-id in the *rack*/*slot*/*module* format. |
| **Step 10** | **bundle id** *bundle-id* [**mode** {**active** \| **on** \| **passive**}]<br>**Example:**<br>`RP/0/RSP0/CPU0:router(config-if)# bundle-id 3` | Adds the link to the specified bundle.<br>To enable active or passive LACP on the bundle, include the optional **mode active** or **mode passive** keywords in the command string.<br>To add the link to the bundle without LACP support, include the optional **mode on** keywords with the command string. |

| | Command or Action | Purpose |
|---|---|---|
| | | **Note** • If you do not specify the **mode** keyword, the default mode is **on (**LACP is not run over the port). |
| **Step 11** | **bundle port-priority** *priority*<br>**Example:**<br>`RP/0/RSP0/CPU0:router(config-if)# bundle port-priority 1` | (Optional) If you set the **bundle maximum-active links** command to 1, you must also set the priority of the active link to the highest priority (lowest value) and the standby link to the second-highest priority (next lowest value). For example, you can set the priority of the active link to 1 and the standby link to 2. |
| **Step 12** | **no shutdown**<br>**Example:**<br>`RP/0/RSP0/CPU0:router(config-if)# no shutdown` | (Optional) If a link is in the down state, bring it up. The **no shutdown** command returns the link to an up or down state depending on the configuration and state of the link. |
| **Step 13** | **exit**<br>**Example:**<br>`RP/0/RSP0/CPU0:router(config-if)# exit` | Exits interface configuration submode for the Ethernet interface. |
| **Step 14** | **bundle id** *bundle-id* `[`**mode** `{`**active** `\|` **passive** `\|` **on**`}]` **no shutdown exit**<br>**Example:**<br>`RP/0/RSP0/CPU0:router(config)# interface GigabitEthernet 1/0/2/1`<br>`RP/0/RSP0/CPU0:router(config-if)# bundle id 3`<br>`RP/0/RSP0/CPU0:router(config-if)# bundle port-priority 2`<br>`RP/0/RSP0/CPU0:router(config-if)# no shutdown`<br>`RP/0/RSP0/CPU0:router(config-if)# exit`<br>`RP/0/RSP0/CPU0:router(config)# interface GigabitEthernet 1/0/2/3`<br>`RP/0/RSP0/CPU0:router(config-if)# bundle id 3`<br>`RP/0/RSP0/CPU0:router(config-if)# no shutdown`<br>`RP/0/RSP0/CPU0:router(config-if)# exit` | (Optional) Repeat Step 8 through Step 11 to add more links to the bundle. |
| **Step 15** | **end** or **commit**<br>**Example:**<br>`RP/0/RSP0/CPU0:router(config-if)# end`<br>or | Saves configuration changes.<br>• When you issue the **end** command, the system prompts you to commit changes:<br>`Uncommitted changes found, commit them before` |

| | Command or Action | Purpose |
|---|---|---|
| | `RP/0/RSP0/CPU0:router(config-if)# commit` | `exiting(yes/no/cancel)? [cancel]:`<br>• Entering **yes** saves configuration changes to the running configuration file, exits the configuration session, and returns the router to EXEC mode.<br>• Entering **no** exits the configuration session and returns the router to EXEC mode without committing the configuration changes.<br>• Entering **cancel** leaves the router in the current configuration session without exiting or committing the configuration changes.<br>• Use the **commit** command to save the configuration changes to the running configuration file and remain within the configuration session. |
| **Step 16** | **exit**<br>**Example:**<br>`RP/0/RSP0/CPU0:router(config-if)# exit` | Exits interface configuration mode. |
| **Step 17** | **exit**<br>**Example:**<br>`RP/0/RSP0/CPU0:router(config)# exit` | Exits global configuration mode. |
| **Step 18** | Perform Step 1 through Step 15 on the remote end of the connection. | Brings up the other end of the link bundle. |
| **Step 19** | **show bundle Bundle-Ether** *bundle-id*<br>**Example:**<br>`RP/0/RSP0/CPU0:router# show bundle Bundle-Ether 3` | (Optional) Shows information about the specified Ethernet link bundle. |
| **Step 20** | **show lacp bundle Bundle-Ether** *bundle-id*<br>**Example:**<br>`RP/0/RSP0/CPU0:router# show lacp bundle Bundle-Ether 3` | (Optional) Shows detailed information about LACP ports and their peers. |

# Configuring EFP Load Balancing on an Ethernet Link Bundle

This section describes how to configure Ethernet flow point (EFP) Load Balancing on an Ethernet link bundle.

By default, Ethernet flow point (EFP) load balancing is enabled. However, the user can choose to configure all egressing traffic on the fixed members of a bundle to flow through the same physical member link. This

configuration is available only on an Ethernet Bundle subinterface with Layer 2 transport (**l2transport**) enabled.

**Note** If the active members of the bundle change, the traffic for the bundle may get mapped to a different physical link that has a hash value that matches the configured value.

## SUMMARY STEPS

1. **configure**
2. **hw-module load-balance bundle l2-service l3-params**
3. **interface Bundle-Ether** *bundle-id* **l2transport**
4. **bundle load-balance hash** *hash-value* [**auto**]
5. **end** or **commit**

## DETAILED STEPS

| | Command or Action | Purpose |
|---|---|---|
| **Step 1** | **configure**<br>**Example:**<br>`RP/0/RSP0/CPU0:router# configure` | Enters global configuration mode. |
| **Step 2** | **hw-module load-balance bundle l2-service l3-params**<br>**Example:**<br>`RP/0/RSP0/CPU0:router(config)# hw-module load-balance bundle l2-service l3-params` | (Optional) Enables Layer 3 load balancing on Layer 2 link bundles. |
| **Step 3** | **interface Bundle-Ether** *bundle-id* **l2transport**<br>**Example:**<br>`RP/0/RSP0/CPU0:router#(config)# interface Bundle-Ether 3 l2transport` | Creates a new Ethernet link bundle with the specified *bundle-id* and with Layer 2 transport enabled.<br>The range is 1 to 65535. |
| **Step 4** | **bundle load-balance hash** *hash-value* [**auto**]<br>**Example:**<br>`RP/0/RSP0# bundle load-balancing hash 1`<br>or<br>`RP/0/RSP0# bundle load-balancing hash auto` | Configures all egressing traffic on the fixed members of a bundle to flow through the same physical member link.<br>• *hash-value*—Numeric value that specifies the physical member link through which all egressing traffic in this bundle will flow. The values are 1 through 8.<br>• **auto**—The physical member link through which all egressing traffic on this bundle will flow is automatically chosen. |
| **Step 5** | **end** or **commit**<br>**Example:** | Saves configuration changes. |

| | Command or Action | Purpose |
|---|---|---|
| | `RP/0/RSP0/CPU0:router(config-if)# end`<br>or<br>`RP/0/RSP0/CPU0:router(config-if)# commit` | • When you issue the **end** command, the system prompts you to commit changes: `Uncommitted changes found, commit them before exiting (yes/no/cancel)?`<br>• Entering **yes** saves configuration changes to the running configuration file, exits the configuration session, and returns the router to EXEC mode.<br>• Entering **no** exits the configuration session and returns the router to EXEC mode without committing the configuration changes.<br>• Entering **cancel** leaves the router in the current configuration session without exiting or committing the configuration changes.<br>• Use the **commit** command to save the configuration changes to the running configuration file and remain within the configuration session. |

# Configuring VLAN Bundles

This section describes how to configure a VLAN bundle. The creation of a VLAN bundle involves three main tasks:

### SUMMARY STEPS

1. Create an Ethernet bundle.
2. Create VLAN subinterfaces and assign them to the Ethernet bundle.
3. Assign Ethernet links to the Ethernet bundle.

### DETAILED STEPS

| | Command or Action | Purpose |
|---|---|---|
| **Step 1** | Create an Ethernet bundle. | |
| **Step 2** | Create VLAN subinterfaces and assign them to the Ethernet bundle. | |
| **Step 3** | Assign Ethernet links to the Ethernet bundle. | |

These tasks are describe in detail in the procedure that follows.

**Note** In order for a VLAN bundle to be active, you must perform the same configuration on both ends of the bundle connection.

## SUMMARY STEPS

1. **configure**
2. **interface Bundle-Ether** *bundle-id*
3. **ipv4 address** *ipv4-address mask*
4. **bundle minimum-active bandwidth** *kbps*
5. **bundle minimum-active links** *links*
6. **bundle maximum-active links** *links* [**hot-standby**]
7. **exit**
8. **interface Bundle-Ether** *bundle-id.vlan-id*
9. **encapsulation dot1q**
10. **ipv4 address** *ipv4-address mask*
11. **no shutdown**
12. **exit**
13. Repeat Step 9 through Step 12 to add more VLANS to the bundle you created in Step 2.
14. **end** or **commit**
15. **exit**
16. **exit**
17. **configure**
18. **interface** {**GigabitEthernet** | **TenGigE**}*interface-path-id*
19. **lacp fast-switchover**

## DETAILED STEPS

| | Command or Action | Purpose |
|---|---|---|
| **Step 1** | **configure**<br>**Example:**<br>`RP/0/RSP0/CPU0:router# configure` | Enters global configuration mode. |
| **Step 2** | **interface Bundle-Ether** *bundle-id*<br>**Example:**<br>`RP/0/RSP0/CPU0:router#(config)# interface Bundle-Ether 3` | Creates and names a new Ethernet link bundle.<br>This **interface Bundle-Ether** command enters you into the interface configuration submode, where you can enter interface-specific configuration commands. Use the **exit** command to exit from the interface configuration submode back to the normal global configuration mode. |
| **Step 3** | **ipv4 address** *ipv4-address mask*<br>**Example:**<br>`RP/0/RSP0/CPU0:router(config-if)# ipv4 address 10.1.2.3 255.0.0.0` | Assigns an IP address and subnet mask to the virtual interface using the **ipv4 address** configuration subcommand. |
| **Step 4** | **bundle minimum-active bandwidth** *kbps*<br>**Example:**<br>`RP/0/RSP0/CPU0:router(config-if)# bundle minimum-active bandwidth 580000` | (Optional) Sets the minimum amount of bandwidth required before a user can bring up a bundle. |

| | Command or Action | Purpose |
|---|---|---|
| **Step 5** | **bundle minimum-active links** *links*<br>**Example:**<br>`RP/0/RSP0/CPU0:router(config-if)# bundle minimum-active links 2` | (Optional) Sets the number of active links required before you can bring up a specific bundle. |
| **Step 6** | **bundle maximum-active links** *links* [**hot-standby**]<br>**Example:**<br>`RP/0/RSP0/CPU0:router(config-if)# bundle maximum-active links 1 hot-standby` | (Optional) Implements 1:1 link protection for the bundle, which causes the highest-priority link in the bundle to become active and the second-highest-priority link to become the standby. Also, specifies that a switchover between active and standby LACP-enabled links is implemented per a proprietary optimization.<br>**Note** The priority of the active and standby links is based on the value of the **bundle port-priority** command. |
| **Step 7** | **exit**<br>**Example:**<br>`RP/0/RSP0/CPU0:router(config-if)# exit` | Exits the interface configuration submode. |
| **Step 8** | **interface Bundle-Ether** *bundle-id.vlan-id*<br>**Example:**<br>`RP/0/RSP0/CPU0:router#(config)# interface Bundle-Ether 3.1` | Creates a new VLAN, and assigns the VLAN to the Ethernet bundle you created in Step 2.<br>Replace the *bundle-id* argument with the *bundle-id* you created in Step 2.<br>Replace the *vlan-id* with a subinterface identifier. Range is from 1 to 4094 inclusive (0 and 4095 are reserved).<br>**Note** When you include the *.vlan-id* argument with the **interface Bundle-Ether** *bundle-id* command, you enter subinterface configuration mode. |
| **Step 9** | **encapsulation dot1q**<br>**Example:**<br>`RP/0/RSP0/CPU0:router(config-subif)# encapsulation dot1q 100, untagged` | Sets the Layer 2 encapsulation of an interface.<br>**Note** The **dot1q vlan** command is replaced by the **encapsulation dot1q** command on the Cisco ASR 9000 Series Router. It is still available for backward-compatibility, but only for Layer 3 interfaces. |
| **Step 10** | **ipv4 address** *ipv4-address mask*<br>**Example:**<br>`RP/0/RSP0/CPU0:router#(config-subif)# ipv4 address 10.1.2.3/24` | Assigns an IP address and subnet mask to the subinterface. |

| | Command or Action | Purpose |
|---|---|---|
| **Step 11** | **no shutdown**<br>**Example:**<br>`RP/0/RSP0/CPU0:router#(config-subif)# no shutdown` | (Optional) If a link is in the down state, bring it up. The **no shutdown** command returns the link to an up or down state depending on the configuration and state of the link. |
| **Step 12** | **exit**<br>**Example:**<br>`RP/0/RSP0/CPU0:router(config-subif)# exit` | Exits subinterface configuration mode for the VLAN subinterface. |
| **Step 13** | Repeat Step 9 through Step 12 to add more VLANS to the bundle you created in Step 2. | (Optional) Adds more subinterfaces to the bundle. |
| **Step 14** | **end** or **commit**<br>**Example:**<br>`RP/0/RSP0/CPU0:router(config-subif)# end`<br>or<br>`RP/0/RSP0/CPU0:router(config-subif)# commit` | Saves configuration changes.<br>• When you issue the **end** command, the system prompts you to commit changes:<br>`Uncommitted changes found, commit them before exiting(yes/no/cancel)? [cancel]:`<br>- Entering **yes** saves configuration changes to the running configuration file, exits the configuration session, and returns the router to EXEC mode.<br>- Entering **no** exits the configuration session and returns the router to EXEC mode without committing the configuration changes.<br>- Entering **cancel** leaves the router in the current configuration session without exiting or committing the configuration changes.<br>• Use the **commit** command to save the configuration changes to the running configuration file and remain within the configuration session. |
| **Step 15** | **exit**<br>**Example:**<br>`RP/0/RSP0/CPU0:router(config-subif)# end` | Exits interface configuration mode. |
| **Step 16** | **exit**<br>**Example:**<br>`RP/0/RSP0/CPU0:router(config)# exit` | Exits global configuration mode. |
| **Step 17** | **configure**<br>**Example:** | Enters global configuration mode. |

| | Command or Action | Purpose |
|---|---|---|
| | `RP/0/RP0/CPU0:router # configure` | |
| **Step 18** | **interface** {**GigabitEthernet** \| **TenGigE**}*interface-path-id*<br>**Example:**<br>`RP/0/RSP0/CPU0:router(config)# interface GigabitEthernet 1/0/0/0` | Enters interface configuration mode for the Ethernet interface you want to add to the Bundle.<br>Enter the **GigabitEthernet** or **TenGigE** keyword to specify the interface type. Replace the *interface-path-id* argument with the node-id in the rack/slot/module format.<br>**Note** A VLAN bundle is not active until you add an Ethernet interface on both ends of the link bundle. |
| **Step 19** | **lacp fast-switchover**<br>**Example:**<br>`RP/0/RSP0/CPU0:router(config-if)# lacp fast-switchover` | (Optional) If you enabled 1:1 link protection (you set the value of the **bundle maximum-active links** command to 1) on a bundle with member links running LACP, you can optionally disable the wait-while timer in the LACP state machine. Disabling this timer causes a bundle member link in standby mode to expedite its normal state negotiations, thereby enabling a faster switchover from a failed active link to the standby link. |

# Configuring POS Link Bundles

This section describes how to configure a POS link bundle.

**Note** In order for a POS bundle to be active, you must perform the same configuration on both connection endpoints of the POS bundle.

### SUMMARY STEPS

1. **configure**
2. **interface Bundle-POS** *bundle-id*
3. **ipv4 address** *ipv4-address mask*
4. **bundle minimum-active bandwidth** *kbps*
5. **bundle minimum-active links** *links*
6. **bundle maximum-active links** *links* [**hot-standby**]
7. **exit**
8. **interface POS** *interface-path-id*
9. **bundle id** *bundle-id*
10. **bundle port-priority** *priority*
11. **no shutdown**
12. **exit**
13. Repeat Step 19 through Step 21 to add more links to a bundle
14. **end** or **commit**

15. **exit**
16. **exit**
17. Perform Step 1 through Step 23 on the remote end of the connection.
18. **show bundle Bundle-POS** *number*

## DETAILED STEPS

| | Command or Action | Purpose |
|---|---|---|
| **Step 1** | **configure**<br>**Example:**<br>`RP/0/RSP0/CPU0:router# configure` | Enters global configuration mode. |
| **Step 2** | **interface Bundle-POS** *bundle-id*<br>**Example:**<br>`RP/0/RSP0/CPU0:router#(config)#interface Bundle-POS 2` | Configures and names the new bundled POS interface.<br>Enters the interface configuration submode, from where interface specific configuration commands are executed. Use the **exit** command to exit from the interface configuration submode, and get back to the normal global configuration mode. |
| **Step 3** | **ipv4 address** *ipv4-address mask*<br>**Example:**<br>`RP/0/RSP0/CPU0:router(config-if)# ipv4 address 10.1.2.3 255.0.0.0` | Assigns an IP address and subnet mask to the virtual interface using the ip address configuration subcommand. |
| **Step 4** | **bundle minimum-active bandwidth** *kbps*<br>**Example:**<br>`RP/0/RSP0/CPU0:router(config-if)# bundle minimum-active bandwidth 620000` | (Optional) Sets the minimum amount of bandwidth required before a user can bring up a bundle. |
| **Step 5** | **bundle minimum-active links** *links*<br>**Example:**<br>`RP/0/RSP0/CPU0:router(config-if)# bundle minimum-active links 2` | (Optional) Sets the number of active links required before you can bring up a specific bundle. |
| **Step 6** | **bundle maximum-active links** *links* [**hot-standby**]<br>**Example:**<br>`RP/0/RSP0/CPU0:router(config-if)# bundle maximum-active links 1 hot-standby` | (Optional) Implements 1:1 link protection for the bundle, which causes the highest-priority link in the bundle to become active and the second-highest-priority link to become the standby. Also, specifies that a switchover between active and standby LACP-enabled links is implemented according to a proprietary optimization.<br>**Note** • The priority of the active and standby links is based on the value of the **bundle port-priority** command. |

| | Command or Action | Purpose |
|---|---|---|
| **Step 7** | **exit** | Exits the interface configuration submode. |
| **Step 8** | **interface POS** *interface-path-id*<br>**Example:**<br>`RP/0/RSP0/CPU0:router(config)# interface POS 0/1/0/0` | Enters POS interface configuration mode and specifies the POS interface name and interface-path-id notation *rack/slot/module/port*. |
| **Step 9** | **bundle id** *bundle-id*<br>**Example:**<br>`RP/0/RSP0/CPU0:router(config-if)# bundle-id 3` | Adds the link to the specified bundle.<br>To add the link to the bundle without LACP support, include the optional **mode on** keywords with the command string.<br>**Note** • If you do not specify the **mode** keyword, the default mode is **on** (LACP is not run over the port). |
| **Step 10** | **bundle port-priority** *priority*<br>**Example:**<br>`RP/0/RSP0/CPU0:router(config-if)# bundle port-priority 1` | (Optional) If you set the **bundle maximum-active links** command to 1, you must also set the priority of the active link to the highest priority (lowest value) and the standby link to the second-highest priority (next lowest value). For example, you can set the priority of the active link to 1 and the standby link to 2. |
| **Step 11** | **no shutdown**<br>**Example:**<br>`RP/0/RSP0/CPU0:router(config-if)# no shutdown` | Removes the shutdown configuration which forces the interface administratively down. The **no shutdown** command then returns the link to an up or down state, depending on the configuration and state of the link. |
| **Step 12** | **exit**<br>**Example:**<br>`RP/0/RSP0/CPU0:router# exit` | Exits the interface configuration submode for the POS interface. |
| **Step 13** | Repeat Step 19 through Step 21 to add more links to a bundle | (Optional) Adds more links to the bundle you created in Step 2. |
| **Step 14** | **end** or **commit**<br>**Example:**<br>`RP/0/RSP0/CPU0:router(config-if)# end`<br>or<br>`RP/0/RSP0/CPU0:router(config-if)# commit` | Saves configuration changes.<br>• When you issue the end command, the system prompts you to commit changes:<br>`Uncommitted changes found, commit them before exiting(yes/no/cancel)? [cancel]:`<br>• Entering **yes** saves configuration changes to the running configuration file, exits the configuration session, and returns the router to EXEC mode. |

| | Command or Action | Purpose |
|---|---|---|
| | | • Entering **no** exits the configuration session and returns the router to EXEC mode without committing the configuration changes.<br>• Entering **cancel** leaves the router in the current configuration session without exiting or committing the configuration changes.<br>• Use the **commit** command to save the configuration changes to the running configuration file and remain within the configuration session. |
| **Step 15** | **exit**<br>**Example:**<br>`RP/0/RSP0/CPU0:router(config-if)# exit` | Exits interface configuration mode. |
| **Step 16** | **exit**<br>**Example:**<br>`RP/0/RSP0/CPU0:router(config)# exit` | Exits global configuration mode. |
| **Step 17** | Perform Step 1 through Step 23 on the remote end of the connection. | Brings up the other end of the link bundle. |
| **Step 18** | **show bundle Bundle-POS** *number*<br>**Example:**<br>`RP/0/RSP0/CPU0:router# show bundle Bundle-POS 1` | (Optional) Shows information about the specified POS link bundle. |

# Configuring Multichassis Link Aggregation

Perform these tasks to configure Multichassis Link Aggregation (MC-LAG):

## Configuring Interchassis Communication Protocol

Perform this task to configure Interchassis Communication Protocol (ICCP).

### SUMMARY STEPS

1. **configure**
2. **redundancy iccp group** *group-id*
3. **member neighbor** *neighbor-ip-address*
4. **backbone interface** *interface-type-id*
5. **isolation recovery-delay** *delay*
6. **end** or **commit**

## DETAILED STEPS

| | Command or Action | Purpose |
|---|---|---|
| **Step 1** | **configure**<br>**Example:**<br>`RP/0/RSP0/CPU0:router# configure` | Enters global configuration mode. |
| **Step 2** | **redundancy iccp group** *group-id*<br>**Example:**<br>`RP/0/RSP0/CPU0:router#(config-redundancy-iccp-group)# redundancy iccp group 100` | Adds an ICCP redundancy group. |
| **Step 3** | **member neighbor** *neighbor-ip-address*<br>**Example:**<br>`RP/0/RSP0/CPU0:router#(config-redundancy-iccp-group)# member neighbor 10.1.1.1` | Configures ICCP members.<br>This is the ICCP peer for this redundancy group. Only one neighbor can be configured per redundancy group. The IP address is the LDP router-ID of the neighbor. This configuration is required for ICCP to function. |
| **Step 4** | **backbone interface** *interface-type-id*<br>**Example:**<br>`RP/0/RSP0/CPU0:router#(config-redundancy-iccp-group)# backbone interface GigabitEthernet0/1/0/2` | Configures ICCP backbone interfaces.<br>This is an optional configuration to detect isolation from the network core, and triggers switchover to the peer POA if the POA on which the failure is occurring is active. Multiple backbone interfaces can be configured for each redundancy group. When all backbone interfaces are not UP, this is an indication of core isolation. When one or more backbone interfaces are UP, then the POA is not isolated from the network core. Backbone interfaces are typically the interfaces which L2VPN pseudowires can use. |
| **Step 5** | **isolation recovery-delay** *delay*<br>**Example:**<br>`RP/0/RSP0/CPU0:router#(config-redundancy-iccp-group)# isolation recovery-delay 30` | Configures the isolation parameters and specifies delay before clearing isolation condition after recovery from failure.<br>Isolation recovery delay timer is started once the core isolation condition has cleared. When the timer expires, the POA can take over as the active POA (depending on other conditions like bundle recovery delay timer). This allows:<br>• the network core to reconverge after the backbone interfaces have come up<br>• ICCP state to be exchanged in order for POAs to know what state they are supposed to be in so that MCLAG bundles do not flap excessively.<br>This is an optional configuration; if not configured, the delay is set to 180 seconds, by default. |
| **Step 6** | **end** or **commit** | Saves configuration changes. |

| | Command or Action | Purpose |
|---|---|---|
| | **Example:**<br>`RP/0/RSP0/CPU0:router(config-redundancy-iccp-group)# end`<br>or<br>`RP/0/RSP0/CPU0:router(config-redundancy-iccp-group)# commit` | • When you issue the **end** command, the system prompts you to commit changes: `Uncommitted changes found, commit them before exiting (yes/no/cancel)?`<br>• Entering **yes** saves configuration changes to the running configuration file, exits the configuration session, and returns the router to EXEC mode.<br>• Entering **no** exits the configuration session and returns the router to EXEC mode without committing the configuration changes.<br>• Entering **cancel** leaves the router in the current configuration session without exiting or committing the configuration changes.<br>• Use the **commit** command to save the configuration changes to the running configuration file and remain within the configuration session. |

# Configuring Multichassis Link Aggregation Control Protocol Session

Perform this task to enable a Multichassis Link Aggregation Control Protocol (mLACP) session.

### SUMMARY STEPS

1. **configure**
2. **redundancy iccp group** *group-id*
3. **mlacp system mac** *mac-id*
4. **mlacp system priority** *priority*
5. **mlacp node** *node-id*
6. **end** or **commit**

### DETAILED STEPS

| | Command or Action | Purpose |
|---|---|---|
| **Step 1** | **configure**<br>**Example:**<br>`RP/0/RSP0/CPU0:router# configure` | Enters global configuration mode. |
| **Step 2** | **redundancy iccp group** *group-id*<br>**Example:**<br>`RP/0/RSP0/CPU0:router#(config-redundancy-iccp-group)# redundancy iccp group 100` | Adds an ICCP redundancy group. |

| | Command or Action | Purpose |
|---|---|---|
| **Step 3** | **mlacp system mac** *mac-id*<br>**Example:**<br>`RP/0/RSP0/CPU0:router#(config-redundancy-iccp-group)# mlacp system mac 1.1.1` | Configures the LACP system ID to be used in this ICCP Group.<br>**Note** • The *mac-id* is a user configured value for the LACP system LAG-ID to be used by the POAs. It is highly recommended that the *mac-ids* have the same value on both POAs. You can have different LAG-IDs for different groups. |
| **Step 4** | **mlacp system priority** *priority*<br>**Example:**<br>`RP/0/RSP0/CPU0:router#(config-redundancy-iccp-group)# mlacp system priority 10` | Sets the LACP system priority to be used in this ICCP Group.<br>**Note** • It is recommended that system priority of the POAs be configured to a lower numerical value (higher priority) than the LACP LAG ID of the DHD. If the DHD has higher system priority then dynamic priority management cannot work and brute force switchover is automatically used. |
| **Step 5** | **mlacp node** *node-id*<br>**Example:**<br>`RP/0/RSP0/CPU0:router#(config-redundancy-iccp-group)# mlacp node 1` | Sets the LACP system priority to be used in this ICCP Group.<br>**Note** • The *node-id* must be unique for each POA. |
| **Step 6** | **end** or **commit**<br>**Example:**<br>`RP/0/RSP0/CPU0:router(config-if)# end`<br>or<br>`RP/0/RSP0/CPU0:router(config-if)# commit` | Saves configuration changes.<br>• When you issue the **end** command, the system prompts you to commit changes:<br>`Uncommitted changes found, commit them before exiting(yes/no/cancel)? [cancel]:`<br>• Entering **yes** saves configuration changes to the running configuration file, exits the configuration session, and returns the router to EXEC mode.<br>• Entering **no** exits the configuration session and returns the router to EXEC mode without committing the configuration changes.<br>• Entering **cancel** leaves the router in the current configuration session without exiting or committing the configuration changes.<br>• Use the **commit** command to save the configuration changes to the running configuration file and remain within the configuration session. |

# Configuring Multichassis Link Aggregation Control Protocol Bundle

Perform this task to configure a Multichassis Link Aggregation Control Protocol (mLACP) bundle.

## SUMMARY STEPS

1. **configure**
2. **interface Bundle-Ether** *bundle-id*
3. **mac-address** *mac-id*
4. **bundle wait-while** *milliseconds*
5. **lacp switchover suppress-flaps** *milliseconds*
6. **mlacp iccp-group** *group-id*
7. **mlacp port-priority** *priority*
8. **end** or **commit**

## DETAILED STEPS

| | Command or Action | Purpose |
|---|---|---|
| **Step 1** | **configure**<br>**Example:**<br>`RP/0/RSP0/CPU0:router# configure` | Enters global configuration mode. |
| **Step 2** | **interface Bundle-Ether** *bundle-id*<br>**Example:**<br>`RP/0/RSP0/CPU0:router#(config)# interface Bundle-Ether 3` | Creates and names a new Ethernet link bundle. |
| **Step 3** | **mac-address** *mac-id*<br>**Example:**<br>`RP/0/RSP0/CPU0:router#(config-if)# mac-address 1.1.1` | Sets the MAC address on the interface.<br>**Note** • Configuring the same MAC address on both POAs is highly recommended. |
| **Step 4** | **bundle wait-while** *milliseconds*<br>**Example:**<br>`RP/0/RSP0/CPU0:router#(config-if)# bundle wait-while 100` | Sets the wait-while timeout for members of this bundle. |
| **Step 5** | **lacp switchover suppress-flaps** *milliseconds*<br>**Example:**<br>`RP/0/RSP0/CPU0:router#(config-if)# lacp switchover suppress-flaps 300` | Sets the time for which to suppress flaps during a LACP switchover.<br>**Note** • It is recommended that the value used for the *milliseconds* argument is greater than that for the wait-while timer of the local device (and DHD). |

| | Command or Action | Purpose |
|---|---|---|
| **Step 6** | **mlacp iccp-group** *group-id*<br>**Example:**<br>`RP/0/RSP0/CPU0:router#(config-if)# mlacp iccp-group 10` | Configures the ICCP redundancy group in which this bundle should operate. |
| **Step 7** | **mlacp port-priority** *priority*<br>**Example:**<br>`RP/0/RSP0/CPU0:router#(config-if)# mlacp port-priority 10` | Sets the starting priority for all member links on this device when running mLACP.<br>**Note** • Lower value indicates higher priority. If you are using dynamic priority management the priority of the links change when switchovers occur. |
| **Step 8** | **end** or **commit**<br>**Example:**<br>`RP/0/RSP0/CPU0:router(config-if)# end`<br>or<br>`RP/0/RSP0/CPU0:router(config-if)# commit` | Saves configuration changes.<br>• When you issue the **end** command, the system prompts you to commit changes: `Uncommitted changes found, commit them before exiting (yes/no/cancel)?`<br>• Entering **yes** saves configuration changes to the running configuration file, exits the configuration session, and returns the router to EXEC mode.<br>• Entering **no** exits the configuration session and returns the router to EXEC mode without committing the configuration changes.<br>• Entering **cancel** leaves the router in the current configuration session without exiting or committing the configuration changes.<br>• Use the **commit** command to save the configuration changes to the running configuration file and remain within the configuration session. |

# Configuring Dual-Homed Device

Perform this task to configure the dual-homed device (DHD).

**Note** If an ASR 9000 Series Router is to be used as a DHD, it is recommended that you configure the **bundle maximum-active links** *links* command where *links* is the number of links connecting the DHD to one of the POAs.

## SUMMARY STEPS

1. **configure**

2. **interface Bundle-Ether** *bundle-id*
3. **bundle wait-while** *milliseconds*
4. **lacp switchover suppress-flaps** *milliseconds*
5. **end** or **commit**

## DETAILED STEPS

| | Command or Action | Purpose |
|---|---|---|
| **Step 1** | **configure**<br>**Example:**<br>`RP/0/RSP0/CPU0:router# configure` | Enters global configuration mode. |
| **Step 2** | **interface Bundle-Ether** *bundle-id*<br>**Example:**<br>`RP/0/RSP0/CPU0:router#(config-if)# interface Bundle-Ether 3` | Creates and names a new Ethernet link bundle. |
| **Step 3** | **bundle wait-while** *milliseconds*<br>**Example:**<br>`RP/0/RSP0/CPU0:router#(config-if)# bundle wait-while 100` | Sets the wait-while timeout for members of this bundle. |
| **Step 4** | **lacp switchover suppress-flaps** *milliseconds*<br>**Example:**<br>`RP/0/RSP0/CPU0:router#(config-if)# lacp switchover suppress-flaps 300` | Sets the time for which to suppress flaps during a LACP switchover. |
| **Step 5** | **end** or **commit**<br>**Example:**<br>`RP/0/RSP0/CPU0:router(config-if)# end`<br>or<br>`RP/0/RSP0/CPU0:router(config-if)# commit` | Saves configuration changes.<br>• When you issue the **end** command, the system prompts you to commit changes: `Uncommitted changes found, commit them before exiting (yes/no/cancel)?`<br>• Entering **yes** saves configuration changes to the running configuration file, exits the configuration session, and returns the router to EXEC mode.<br>• Entering **no** exits the configuration session and returns the router to EXEC mode without committing the configuration changes.<br>• Entering **cancel** leaves the router in the current configuration session without exiting or committing the configuration changes.<br>• Use the **commit** command to save the configuration changes to the running configuration file and remain within the configuration session. |

| | Command or Action | Purpose |
|---|---|---|
| | | The members added to the bundle on one POA go *Active*, and the members on the other POA are in *Standby* state. This can be verified by using the **show bundle** command on either POA to display the membership information for correctly configured members on both the POAs:<br><br>`RP/0/RSP0/CPU0:router# show bundle`<br><br>`Bundle-Ether1`<br>`  Status:  Up`<br>`  Local links <active/standby/configured>:  1 / 0 / 1`<br>`  Local bandwidth <effective/available>:  1000000 (1000000) kbps`<br>`  MAC address (source):  0000.deaf.0000 (Configured)`<br>`  Minimum active links / bandwidth:  1 / 1 kbps`<br>`  Maximum active links:  64`<br>`  Wait while timer:  100 ms`<br>`  LACP:  Operational`<br>`  Flap suppression timer:  300 ms`<br>`  mLACP:  Operational`<br>`  ICCP Group:  1`<br>`  Role:  Active`<br>`  Foreign links <active/configured>:  0 / 1`<br>`  Switchover type:  Non-revertive`<br>`  Recovery delay:  300 s`<br>`  Maximize threshold:  Not configured`<br>`  IPv4 BFD:  Not configured`<br><br>`  Port  Device  State  Port ID  B/W, kbps`<br>`  -------- -------- -------- -------- ----------`<br>`  Gi0/0/0/0  Local  Active  0x8001, 0x9001  1000000`<br>`  Link is Active`<br>`  Gi0/0/0/0  5.4.3.2  Standby  0x8002, 0xa001  1000000`<br>`  Link is marked as Standby by mLACP peer` |

**Note** To switch to an active POA, use the **mlacp switchover Bundle-Ether** command on the currently active router.

# Configuring One-way Pseudowire Redundancy in MC-LAG

Perform this task to allow one-way pseudowire redundancy behavior when the redundancy group is configured.

## SUMMARY STEPS

1. **configure**
2. **l2vpn**
3. **pw-class** {*class-name*}

4. **encapsulation mpls**
5. **redundancy one-way**
6. **end** or **commit**

## DETAILED STEPS

| | Command or Action | Purpose |
|---|---|---|
| **Step 1** | **configure**<br>**Example:**<br>`RP/0/RSP0/CPU0:router# configure` | Enters global configuration mode. |
| **Step 2** | **l2vpn**<br>**Example:**<br>`RP/0/RSP0/CPU0:router(config)# l2vpn`<br>`RP/0/RSP0/CPU0:router(config-l2vpn)#` | Enters L2VPN configuration mode. |
| **Step 3** | **pw-class** {*class-name*}<br>**Example:**<br>`RP/0/RSP0/CPU0:router(config-l2vpn)# pw-class class1` | Configures the pseudowire class template name to use for the pseudowire. |
| **Step 4** | **encapsulation mpls**<br>**Example:**<br>`RP/0/RSP0/CPU0:router(config-l2vpn-pwc)# encapsulation mpls` | Configures the pseudowire encapsulation to MPLS. |
| **Step 5** | **redundancy one-way**<br>**Example:**<br>`RP/0/RSP0/CPU0:router(config-l2vpn-pwc-mpls)# redundancy one-way` | Configures one-way PW redundancy behavior.<br>**Note** • The **redundancy one-way** command is effective only if the redundancy group is configured.<br>• The **redundancy one-way** command is mandatory for one-way pseudowire redundancy in MC-LAG to avoid inconsistent PW states on remote PEs for the MC-LAG point of attachments. |
| **Step 6** | **end** or **commit**<br>**Example:**<br>`RP/0/RSP0/CPU0:router(config-l2vpn-bg-bd-mac)# end`<br>or | Saves configuration changes.<br>• When you issue the **end** command, the system prompts you to commit changes:<br>`Uncommitted changes found, commit them before exiting(yes/no/cancel)?`<br>`[cancel]:` |

| | Command or Action | Purpose |
|---|---|---|
| | `RP/0/RSP0/CPU0:router(config-l2vpn-bg-bd-mac)# commit` | • Entering **yes** saves configuration changes to the running configuration file, exits the configuration session, and returns the router to EXEC mode.<br>• Entering **no** exits the configuration session and returns the router to EXEC mode without committing the configuration changes.<br>• Entering **cancel** leaves the router in the current configuration session without exiting or committing the configuration changes.<br>• Use the **commit** command to save the configuration changes to the running configuration file and remain within the configuration session. |

# Configuring VPWS Cross-Connects in MC-LAG

Perform this task to configure VPWS cross-connects in MC-LAG.

### SUMMARY STEPS

1. **configure**
2. **l2vpn**
3. **pw-status**
4. **xconnect group** *group-name*
5. **p2p** *xconnect-name*
6. **interface** *type interface-path-id*
7. **neighbor** *A.B.C.D* **pw-id** *pseudowire-id*
8. **pw-class** {*class-name*}
9. **backup neighbor** *A.B.C.D* **pw-id** *pseudowire-id*
10. **pw-class** {*class-name*}
11. **end** or **commit**

### DETAILED STEPS

| | Command or Action | Purpose |
|---|---|---|
| **Step 1** | **configure**<br>**Example:**<br>`RP/0/RSP0/CPU0:router# configure` | Enters global configuration mode. |
| **Step 2** | **l2vpn**<br>**Example:**<br>`RP/0/RSP0/CPU0:router(config)# l2vpn` | Enters L2VPN configuration mode. |

| | Command or Action | Purpose |
|---|---|---|
| **Step 3** | **pw-status**<br>**Example:**<br>`RP/0/RSP0/CPU0:router(config-l2vpn)# pw-status` | Enables pseudowire status.<br>**Note** • When the attachment circuit changes redundancy state to Active, Active pw-status is sent over the primary and backup pseudowires.<br>When the attachment circuit changes redundancy state to Standby, Standby pw-status is sent over the primary and backup pseudowires. |
| **Step 4** | **xconnect group** *group-name*<br>**Example:**<br>`RP/0/RSP0/CPU0:router(config-l2vpn)# xconnect group grp_1` | Enters the name of the cross-connect group. |
| **Step 5** | **p2p** *xconnect-name*<br>**Example:**<br>`RP/0/RSP0/CPU0:router(config-l2vpn-xc)# p2p p1` | Enters a name for the point-to-point cross-connect. |
| **Step 6** | **interface** *type interface-path-id*<br>**Example:**<br>`RP/0/RSP0/CPU0:router(config-l2vpn-xc-p2p)# interface Bundle-Ether 1.1` | Specifies the interface type ID. |
| **Step 7** | **neighbor** *A.B.C.D* **pw-id** *pseudowire-id*<br>**Example:**<br>`RP/0/RSP0/CPU0:router(config-l2vpn-xc-p2p)# neighbor 10.2.2.2 pw-id 2000` | Configures the pseudowire segment for the cross-connect.<br>Optionally, you can disable the control word or set the transport-type to Ethernet or VLAN. |
| **Step 8** | **pw-class** {*class-name*}<br>**Example:**<br>`RP/0/RSP0/CPU0:router(config-l2vpn-xc-p2p-pw)# pw-class c1` | Configures the pseudowire class template name to use for the pseudowire. |
| **Step 9** | **backup neighbor** *A.B.C.D* **pw-id** *pseudowire-id*<br>**Example:**<br>`RP/0/RSP0/CPU0:router(config-l2vpn-xc-p2p-pw)# backup neighbor 10.2.2.2 pw-id 2000` | Adds a backup pseudowire. |
| **Step 10** | **pw-class** {*class-name*}<br>**Example:** | Configures the pseudowire class template name to use for the backup pseudowire. |

| | Command or Action | Purpose |
|---|---|---|
| | `RP/0/RSP0/CPU0:router(config-l2vpn-xc-p2p-pw-backup)# pw-class c2` | |
| **Step 11** | **end** or **commit**<br>**Example:**<br>`RP/0/RSP0/CPU0:router(config-l2vpn-xc-p2p-pw-backup)# end`<br>or<br>`RP/0/RSP0/CPU0:router(config-l2vpn-xc-p2p-pw-backup)# commit` | Saves configuration changes.<br>• When you issue the **end** command, the system prompts you to commit changes:<br>`Uncommitted changes found, commit them before exiting(yes/no/cancel)? [cancel]:`<br>- Entering **yes** saves configuration changes to the running configuration file, exits the configuration session, and returns the router to EXEC mode.<br>- Entering **no** exits the configuration session and returns the router to EXEC mode without committing the configuration changes.<br>- Entering **cancel** leaves the router in the current configuration session without exiting or committing the configuration changes.<br>• Use the **commit** command to save the configuration changes to the running configuration file and remain within the configuration session. |

# Configuring ICCP based Service Homing

Perform this task to configure ICCP-SM.

### Before you begin

You must have configured ICCP as shown in the procedure Configuring Interchassis Communication Protocol.

## SUMMARY STEPS

1. **configure**
2. **l2vpn**
3. **redundancy iccp group** *group-id*
4. **multi-homing node-id** *node-id*
5. **mac-flush** *type*
6. **interface** *type interface-path-id*
7. **primary vlan** *{vlan range}*
8. **secondary vlan** *{vlan range}*
9. **end** or **commit**

## DETAILED STEPS

| | Command or Action | Purpose |
|---|---|---|
| **Step 1** | **configure**<br>**Example:**<br>`RP/0/RSP0/CPU0:router# configure` | Enters global configuration mode. |
| **Step 2** | **l2vpn**<br>**Example:**<br>`RP/0/RSP0/CPU0:router(config)# l2vpn`<br>`RP/0/RSP0/CPU0:router(config-l2vpn)#` | Enters L2VPN configuration mode. |
| **Step 3** | **redundancy iccp group** *group-id*<br>**Example:**<br>`RP/0/RSP0/CPU0:router#(config-l2vpn)# redundancy iccp group 100` | Enables L2VPN redundancy mode and enters redundancy configuration submode. Adds an ICCP redundancy group. |
| **Step 4** | **multi-homing node-id** *node-id*<br>**Example:**<br>`RP/0/RSP0/CPU0:router(config-l2vpn-red-grp)# multi-homing node-id 1` | Enter the pseudo MLACP node ID. Enables the ICCP based multi-homing service. The node-ID is used for ICCP signaling arbitration. |
| **Step 5** | **mac-flush** *type*<br>**Example:**<br>`RP/0/RSP0/CPU0:router(config-l2vpn-red-grp)# mac-flush stp-tcn` | Specifies the type of MAC flush, either stp tcn or mvrp (default). |
| **Step 6** | **interface** *type interface-path-id*<br>**Example:**<br>`RP/0/RSP0/CPU0:router(config-l2vpn-reg-grp)# interface Bundle-Ether 1` | Specifies the interface type ID. It can be a physical port name or the main bundle name (sub-port is not allowed). It can be any physical Ethernet or bundle Ethernet interface connecting to a dual homed CE device.<br>Only bundle-ethernet main ports are allowed for ICCP-SM. If you want to use this feature on a single ethernet link, then you must configure a bundle with that link. |
| **Step 7** | **primary vlan** *{vlan range}*<br>**Example:**<br>`RP/0/RSP0/CPU0:router(config-l2vpn-reg-grp)# primary vlan 1-10` | Configures the list of VLANs under the main port,which default to active (forwarding) when there are no faults detected.<br>Specify the list of of comma separated VLAN ranges or individual VLANs. |

| | Command or Action | Purpose |
|---|---|---|
| **Step 8** | **secondary vlan** *{vlan range}*<br>**Example:**<br>`RP/0/RSP0/CPU0:router(config-l2vpn-reg-grp)# secondary vlan 11-20` | Configures the list of VLANs under the main port, which default to standby (blocked) when there are no faults detected.<br>Specify the list of of comma separated VLAN ranges or individual VLANs. |
| **Step 9** | **end** or **commit**<br>**Example:**<br>`RP/0/RSP0/CPU0:router(config-l2vpn-bg-bd-vfi-pw)# end`<br>or<br>`RP/0/RSP0/CPU0:router(config-l2vpn-bg-bd-vfi-pw)# commit` | Saves configuration changes.<br>• When you issue the **end** command, the system prompts you to commit changes: `Uncommitted changes found, commit them before exiting (yes/no/cancel)?`<br>• Entering **yes** saves configuration changes to the running configuration file, exits the configuration session, and returns the router to EXEC mode.<br>• Entering **no** exits the configuration session and returns the router to EXEC mode without committing the configuration changes.<br>• Entering **cancel** leaves the router in the current configuration session without exiting or committing the configuration changes.<br>• Use the **commit** command to save the configuration changes to the running configuration file and remain within the configuration session.<br>**Note** You can use the **show iccp group**, **show l2vpn iccp-sm** and **show lacp bundle-ether** commands to monitor ICCP-SM. |

# Configuring VPLS in MC-LAG

Perform this task to configure VPLS in MC-LAG.

### SUMMARY STEPS

1. **configure**
2. **l2vpn**
3. **pw-status**
4. **bridge group** *bridge-group-name*
5. **bridge-domain** *bridge-domain-name*
6. **interface** *type interface-path-id*
7. **vfi** *{vfi-name}*
8. **neighbor** *A.B.C.D* **pw-id** *pseudowire-id*
9. **pw-class** {*class-name*}
10. **end** or **commit**

## DETAILED STEPS

| | Command or Action | Purpose |
|---|---|---|
| **Step 1** | **configure**<br>**Example:**<br>`RP/0/RSP0/CPU0:router# configure` | Enters global configuration mode. |
| **Step 2** | **l2vpn**<br>**Example:**<br>`RP/0/RSP0/CPU0:router(config)# l2vpn` | Enters L2VPN configuration mode. |
| **Step 3** | **pw-status**<br>**Example:**<br>`RP/0/RSP0/CPU0:router(config-l2vpn)# pw-status` | (Optional) Enables pseudowire status.<br>All the pseudowires in the VFI are always active, independent of the attachment circuit redundancy state. |
| **Step 4** | **bridge group** *bridge-group-name*<br>**Example:**<br>`RP/0/RSP0/CPU0:router(config-l2vpn)# bridge group csco`<br>`RP/0/RSP0/CPU0:router(config-l2vpn-bg)#` | Creates a bridge group so that it can contain bridge domains and then assigns network interfaces to the bridge domain. |
| **Step 5** | **bridge-domain** *bridge-domain-name*<br>**Example:**<br>`RP/0/RSP0/CPU0:router(config-l2vpn-bg)# bridge-domain abc`<br>`RP/0/RSP0/CPU0:router(config-l2vpn-bg-bd)#` | Establishes a bridge domain and enters L2VPN bridge group bridge domain configuration mode. |
| **Step 6** | **interface** *type interface-path-id*<br>**Example:**<br>`RP/0/RSP0/CPU0:router(config-l2vpn-bg-bd)# interface Bundle-Ether 1.1` | Specifies the interface type ID. |
| **Step 7** | **vfi** *{vfi-name}*<br>**Example:**<br>`RP/0/RSP0/CPU0:router(config-l2vpn-bg-bd-ac)# vfi vfi-east` | Enters virtual forwarding instance (VFI) configuration mode. |
| **Step 8** | **neighbor** *A.B.C.D* **pw-id** *pseudowire-id*<br>**Example:**<br>`RP/0/RSP0/CPU0:router(config-l2vpn-bg-bd-vfi)# neighbor 10.2.2.2 pw-id 2000` | Configures the pseudowire segment for the cross-connect.<br>Optionally, you can disable the control word or set the transport-type to Ethernet or VLAN. |

| | Command or Action | Purpose |
|---|---|---|
| **Step 9** | **pw-class** {*class-name*}<br>**Example:**<br>`RP/0/RSP0/CPU0:router(config-l2vpn-bg-bd-vfi-pw)# pw-class canada` | Configures the pseudowire class template name to use for the pseudowire. |
| **Step 10** | **end** or **commit**<br>**Example:**<br>`RP/0/RSP0/CPU0:router(config-l2vpn-bg-bd-vfi-pw)# end`<br>or<br>`RP/0/RSP0/CPU0:router(config-l2vpn-bg-bd-vfi-pw)# commit` | Saves configuration changes.<br>• When you issue the **end** command, the system prompts you to commit changes:<br>`Uncommitted changes found, commit them before exiting(yes/no/cancel)? [cancel]:`<br>- Entering **yes** saves configuration changes to the running configuration file, exits the configuration session, and returns the router to EXEC mode.<br>- Entering **no** exits the configuration session and returns the router to EXEC mode without committing the configuration changes.<br>- Entering **cancel** leaves the router in the current configuration session without exiting or committing the configuration changes.<br>• Use the **commit** command to save the configuration changes to the running configuration file and remain within the configuration session. |

# How to Configure MGSCP

Perform these tasks to configure MGSCP.

## Prerequisites for Configuring MGSCP

Before configuring MGSCP, be sure that the following prerequisites are met:

- You have Gigabit Ethernet or 10-Gigabit Ethernet line cards installed in the Cisco ASR 9000 Series Router.
- You understand how to configure your cluster of Service Control Engine (SCE) devices and configure them according to the desired requirements of your network, including the following requirements for MGSCP support:
  - When you connect the SCE devices to the Cisco ASR 9000 Series Router, be sure that each SCE device has two separate physical links connecting to two different bundle interfaces on the Cisco ASR 9000 Series Router as follows:

    — One link from each SCE device is connected to a link on the bundle interface that is routed to the access (or subscriber) side of the network.

— The second link from each SCE device is connected to a link on another bundle interface that is routed to the core side of the network.

- On the SCE device, you configure the SCE ports for link failure reflection (using the **link failure-reflection** command) to ensure that if a link on one side of the SCE goes down, then the link on the other side is automatically shut down. For more information, see the "Configuring the Connection" chapter in the Cisco SCE software configuration guide for your device and release at:

  http://www.cisco.com/en/US/products/ps6134/products_installation_and_configuration_guides_list.html

- For your bundle configuration on the Cisco ASR 9000 Series Router, determine the following information:
  - The maximum number of active links that you will support.
  - The bundle links that will be protect (backup) links. You can configure a maximum of 4 protect links.
- To maintain the statefulness of the connected SCEs, all subscriber flows must pass through the same SCE. Therefore, before you configure MGSCP, you need to determine how you want to configure the router to redirect subscriber traffic to ensure that it passes through the appropriate bundle interfaces connected to that SCE.

  You can use one of the following methods:
  - ACL-Based Forwarding (ABF)—Supports only IP addresses for the next hop, and can be complex to configure. For more information about ABF, see the "Implementing Access Lists and Prefix Lists" chapter of the Cisco ASR 9000 Series Aggregation Services Router IP Addresses and Services Configuration Guide.
  - Virtual Routing and Forwarding (VRF)—Recommended. Uses VRF instances for the access and network bundles, which can then be routed using static or dynamic routing with OSPF and BGP.

# Restrictions for Configuring MGSCP

Before configuring MGSCP, consider these restrictions:

- You can configure up to a maximum of 4 protect links on a bundle.
- You can configure up to a maximum of 8 member links on a bundle.
- Packets received on the ingress interface must not be tagged with MPLS for MGSCP to effectively do load balancing at the egress interface.

# Configuring the Access Bundle for the Subscriber-Facing Side

The configuration of the access bundle facing the subscriber side of the network is similar to the core bundle configuration, with the following guidelines:

- If using VRFs to route subscriber traffic on the same SCE to the bundle (recommended), then a separate VRF is used for the subscriber-facing side.
- Link-order signaling is required to enable LACP processing of link ordering numbers (LONs) for load balancing tables.

- Bundle load balancing is configured based on source IP address.
- The maximum number of active links must be configured to match the maximum number of active links on the core bundle.

## SUMMARY STEPS

1. **configure**
2. **interface Bundle-Ether** *bundle-id*
3. **vrf** *vrf-name*
4. **ipv4 address** *ipv4-address mask*
5. **lacp cisco enable link-order signaled**
6. **bundle load-balancing hash src-ip**
7. **bundle maximum-active links** *links* [**hot-standby**]
8. **end** or **commit**

## DETAILED STEPS

| | Command or Action | Purpose |
|---|---|---|
| **Step 1** | **configure**<br>**Example:**<br>`RP/0/RSP0/CPU0:router# configure` | Enters global configuration mode. |
| **Step 2** | **interface Bundle-Ether** *bundle-id*<br>**Example:**<br>`RP/0/RSP0/CPU0:router(config)# interface Bundle-Ether 100` | Specifies or creates an Ethernet bundle interface for the subscriber-facing side of the network, where *bundle-id* is a number from 1 to 65535, and enters interface configuration mode. |
| **Step 3** | **vrf** *vrf-name*<br>**Example:**<br>`RP/0/RSP0/CPU0:router(config-if)# vrf access` | (Optional—Recommended) Specifies the VRF instance for the subscriber-facing side of the network in which this Ethernet bundle participates. |
| **Step 4** | **ipv4 address** *ipv4-address mask*<br>**Example:**<br>`RP/0/RSP0/CPU0:router(config-if)# ipv4 address 10.1.1.1 255.255.255.0` | Specifies an IPv4 address and mask that is part of the specified VRF for this interface, where *ipv4-address* is the 32-bit IP address wtih corresponding mask in dotted-decimal format (A.B.C.D).<br>**Note** • This command must be specified after the **vrf** command to be sure that the IP address is part of the VRF instance. |
| **Step 5** | **lacp cisco enable link-order signaled**<br>**Example:**<br>`RP/0/RSP0/CPU0:router(config-if)# lacp cisco enable link-order signaled` | Enables the use of Cisco TLVs to include link order numbering as part of the LACP processing on this bundle. |

| | Command or Action | Purpose |
|---|---|---|
| **Step 6** | **bundle load-balancing hash src-ip**<br>**Example:**<br>`RP/0/RSP0/CPU0:router(config-if)# bundle load-balancing hash src-ip` | Specifies that the hash used for load balancing on the subscriber bundle interface is based on source IP address. |
| **Step 7** | **bundle maximum-active links** *links* [**hot-standby**]<br>**Example:**<br>`RP/0/RSP0/CPU0:router(config-if)# bundle maximum-active links 2` | Specifies the maximum number of active links allowed for the bundle, and sets the upper bound on the link ordering numbers in use for load balancing tables.<br>**Note** To support MGSCP, this command must also be configured with the same value on the core bundle. |
| **Step 8** | **end** or **commit**<br>**Example:**<br>`RP/0/RSP0/CPU0:router (config-bfd-if)# end`<br>or<br>`RP/0/RSP0/CPU0:router(config-bfd-if)# commit` | Saves configuration changes.<br>• When you issue the **end** command, the system prompts you to commit changes:<br>`Uncommitted changes found, commit them before exiting(yes/no/cancel)? [cancel]:`<br>- Entering **yes** saves configuration changes to the running configuration file, exits the configuration session, and returns the router to EXEC mode.<br>- Entering **no** exits the configuration session and returns the router to EXEC mode without committing the configuration changes.<br>- Entering **cancel** leaves the router in the current configuration session without exiting or committing the configuration changes.<br>• Use the **commit** command to save the configuration changes to the running configuration file and remain within the configuration session. |

# Configuring the Network Bundle for the Core-Facing Side

The configuration of the bundle facing the core side of the network is similar to the access bundle configuration, with the following guidelines:

- If using VRFs to route subscriber traffic on the same SCE to the bundle (recommended), then a separate VRF is used for the core-facing side.
- Link-order signaling is required to enable LACP processing of LONs for load balancing tables.
- Bundle load balancing is configured based on destination IP address.

- The maximum number of active links must be configured to match the maximum number of active links on the access bundle.

## SUMMARY STEPS

1. **configure**
2. **interface Bundle-Ether** *bundle-id*
3. **vrf** *vrf-name*
4. **ipv4 address** *ipv4-address mask*
5. **lacp cisco enable link-order signaled**
6. **bundle load-balancing hash dst-ip**
7. **bundle maximum-active links** *links* [**hot-standby**]
8. **end** or **commit**

## DETAILED STEPS

| | Command or Action | Purpose |
|---|---|---|
| **Step 1** | **configure**<br>**Example:**<br>`RP/0/RSP0/CPU0:router# configure` | Enters global configuration mode. |
| **Step 2** | **interface Bundle-Ether** *bundle-id*<br>**Example:**<br>`RP/0/RSP0/CPU0:router(config)# interface Bundle-Ether 100` | Specifies or creates an Ethernet bundle interface for the subscriber-facing side of the network, where *bundle-id* is a number from 1 to 65535, and enters interface configuration mode. |
| **Step 3** | **vrf** *vrf-name*<br>**Example:**<br>`RP/0/RSP0/CPU0:router(config-if)# vrf access` | (Optional—Recommended) Specifies the VRF instance for the core-facing side of the network in which this Ethernet bundle participates. |
| **Step 4** | **ipv4 address** *ipv4-address mask*<br>**Example:**<br>`RP/0/RSP0/CPU0:router(config-if)# ipv4 address 10.1.1.1 255.255.255.0` | Specifies an IPv4 address and mask that is part of the specified VRF for this interface, where *ipv4-address* is the 32-bit IP address wtih corresponding mask in dotted-decimal format (A.B.C.D).<br>**Note** • This command must be specified after the **vrf** command to be sure that the IP address is part of the VRF instance. |
| **Step 5** | **lacp cisco enable link-order signaled**<br>**Example:**<br>`RP/0/RSP0/CPU0:router(config-if)# lacp cisco enable link-order signaled` | Enables the use of Cisco TLVs to include link order numbering as part of the LACP processing on this bundle. |

| | Command or Action | Purpose |
|---|---|---|
| **Step 6** | **bundle load-balancing hash dst-ip**<br>**Example:**<br>`RP/0/RSP0/CPU0:router(config-if)# bundle load-balancing hash dst-ip` | Specifies that the hash used for load balancing on the subscriber bundle interface is based on destination IP address. |
| **Step 7** | **bundle maximum-active links** *links* [**hot-standby**]<br>**Example:**<br>`RP/0/RSP0/CPU0:router(config-if)# bundle maximum-active links 2` | Specifies the maximum number of active links allowed for the bundle, and sets the upper bound on the link ordering numbers in use for load balancing tables.<br>**Note** • To support MGSCP, this command must also be configured with the same value on the access bundle. |
| **Step 8** | **end** or **commit**<br>**Example:**<br>`RP/0/RSP0/CPU0:router (config-bfd-if)# end`<br>or<br>`RP/0/RSP0/CPU0:router(config-bfd-if)# commit` | Saves configuration changes.<br>• When you issue the **end** command, the system prompts you to commit changes:<br>`Uncommitted changes found, commit them before exiting(yes/no/cancel)? [cancel]:`<br>- Entering **yes** saves configuration changes to the running configuration file, exits the configuration session, and returns the router to EXEC mode.<br>- Entering **no** exits the configuration session and returns the router to EXEC mode without committing the configuration changes.<br>- Entering **cancel** leaves the router in the current configuration session without exiting or committing the configuration changes.<br>• Use the **commit** command to save the configuration changes to the running configuration file and remain within the configuration session. |

# Configuring the Bundle Member Interfaces

When the access and core bundles have been configured, bundle interfaces must be configured as the active and protect links on those bundles, with the following guidelines:

- A link becomes a bundle member using the **bundle id** command and specifying the ID of the corresponding bundle interface. For MGSCP, there are two different bundles: one for the access side traffic, and one for the core side traffic. These bundles each have a link connecting to either side of an SCE. Be sure to carefully map your interfaces to the appropriate bundle.
- LACP is required for MGSCP, so the link must be configured with **mode active** on the bundle.

- Active and backup (protect) links are configured using the **bundle port-priority** command:
  - To configure a working (active) link, use a priority of 1. The maximum number of active links that you can configure is determined by the value of the **bundle maximum-active links** command on the bundle.
  - Any priority other than 1 designates the link as a protect link. You can configure a maximum of 4 protect links.

## SUMMARY STEPS

1. **configure**
2. **interface** [**GigabitEthernet** | **TenGigE**] *interface-path-id*
3. **bundle id** *bundle-id* **mode active**
4. **bundle port-priority** *priority*
5. **end** or **commit**

## DETAILED STEPS

| | Command or Action | Purpose |
|---|---|---|
| **Step 1** | **configure**<br>**Example:**<br>`RP/0/RSP0/CPU0:router# configure` | Enters global configuration mode. |
| **Step 2** | **interface** [**GigabitEthernet** \| **TenGigE**] *interface-path-id*<br>**Example:**<br>`RP/0/RSP0/CPU0:router(config)# interface GigabitEthernet 0/0/0/0` | Specifies or creates a Gigabit Ethernet or 10-Gigabit Ethernet interface, where *interface-path-id* is the physical location of the interface using *rack*/*slot*/*module*/*port* notation, and enters interface configuration mode. |
| **Step 3** | **bundle id** *bundle-id* **mode active**<br>**Example:**<br>`RP/0/RSP0/CPU0:router(config-if)# bundle id 100 mode active` | Adds the interface as a member of the specified bundle, and runs LACP in active mode on the interface to exchange LACP packets for MGSCP. |
| **Step 4** | **bundle port-priority** *priority*<br>**Example:**<br>`RP/0/RSP0/CPU0:router(config-if)# bundle port-priority 1` | Specifies the LACP priority for the interface and determines if a bundle interface is an active or protect link for MGSCP:<br>• Value of 1—Specifies the link is an active interface.<br>• Value other than 1—Specfies the link is a protect interface.<br>The default is 32768. |
| **Step 5** | **end** or **commit**<br>**Example:**<br>`RP/0/RSP0/CPU0:router (config-bfd-if)# end` | Saves configuration changes.<br>• When you issue the **end** command, the system prompts you to commit changes: |

| | Command or Action | Purpose |
|---|---|---|
| | or<br><br>`RP/0/RSP0/CPU0:router(config-bfd-if)# commit` | `Uncommitted changes found, commit them before exiting(yes/no/cancel)? [cancel]:`<br><br>- Entering **yes** saves configuration changes to the running configuration file, exits the configuration session, and returns the router to EXEC mode.<br><br>- Entering **no** exits the configuration session and returns the router to EXEC mode without committing the configuration changes.<br><br>- Entering **cancel** leaves the router in the current configuration session without exiting or committing the configuration changes.<br><br>• Use the **commit** command to save the configuration changes to the running configuration file and remain within the configuration session. |

# Configuring VRFs to Route Traffic to the Bundles

VRFs are the recommended way to route subscriber traffic to the bundles to be sure that all subscriber traffic remains with the same SCE device for statefulness. To configure VRFs for MGSCP, complete one of the following tasks:

## Configuring VRFs with Static Routing

These steps summarize the tasks required to configure VRFs using static routing:

1. Configure two VRFs in global configuration—one each for the access and core sides of the network. Be sure to specify the IPv4 unicast address family.
2. Configure IPv4 addresses at each of the bundle interfaces and associate those addresses with the corresponding VRF that you configured in global configuration for the access and core side of the network.
3. Configure IPv4 addresses at the Gigabit Ethernet physical interfaces and associate those addresses with the corresponding VRF that you configured in global configuration for the access and core side of the network.
4. Configure static routing using the **router static** command to map the access and core VRFs to their corresponding bundle interfaces.

For a sample configuration, see the “Example: Configuring VRFs with Static Routing” section.

## Configuring VRFs with Dynamic Routing

VRFs for MGSCP are supported for both OSPF and BGP routing protocols. The general configuration of the VRFs in global configuration and at the bundle and physical interfaces is the same as for static routing.

These steps summarize the tasks required to configure VRFs using OSPF routing:

1. Configure two VRFs in global configuration—one each for the access and core sides of the network. Be sure to specify the IPv4 unicast address family.
2. Configure IPv4 addresses at each of the bundle interfaces and associate those addresses with the corresponding VRF that you configured in global configuration for the access and core side of the network.
3. Configure IPv4 addresses at the Gigabit Ethernet physical interfaces and associate those addresses with the corresponding VRF that you configured in global configuration for the access and core side of the network.
4. Configure a dynamic routing protocol, such as OSPF, using the **router ospf** command to define the VRFs and associate the bundle and physical interfaces to the OSPF areas.

For a sample configuration, see the Example: Configuring VRFs with OSPF Routing.

# Configuration Examples for Link Bundling

This section contains the following examples:

## Example: Configuring an Ethernet Link Bundle

The following example shows how to join two ports to form an EtherChannel bundle running LACP:

```
RP/0/RSP0/CPU0:Router(config)# config

RP/0/RSP0/CPU0:Router(config-if)# interface Bundle-Ether 3
RP/0/RSP0/CPU0:Router(config-if)# ipv4 address 1.2.3.4/24
RP/0/RSP0/CPU0:Router(config-if)# bundle minimum-active bandwidth 620000
RP/0/RSP0/CPU0:Router(config-if)# bundle minimum-active links 1
RP/0/RSP0/CPU0:Router(config-if)# exit
RP/0/RSP0/CPU0:Router(config-if)# interface TenGigE 0/3/0/0
RP/0/RSP0/CPU0:Router(config-if)# bundle id 3 mode active
RP/0/RSP0/CPU0:Router(config-if)# no shutdown
RP/0/RSP0/CPU0:Router(config)# exit
RP/0/RSP0/CPU0:Router(config-if)# interface TenGigE 0/3/0/1
RP/0/RSP0/CPU0:Router(config-if)# bundle id 3 mode active
RP/0/RSP0/CPU0:Router(config-if)# no shutdown
RP/0/RSP0/CPU0:Router(config-if)# exit
```

This example shows the configuration in the case of a mixed speed bundle:

```
RP/0/RSP0/CPU0:Router(config)# config

RP/0/RSP0/CPU0:Router(config-if)# interface bundle-ether 50
RP/0/RSP0/CPU0:Router(config-if)# root
RP/0/RSP0/CPU0:Router(config-if)# interface TenGigE 0/0/0/11
RP/0/RSP0/CPU0:Router(config-if)# bundle id 50 mode active
RP/0/RSP0/CPU0:Router(config-if)# no shutdown
RP/0/RSP0/CPU0:Router(config-if)# interface TenGigE 0/0/0/16
RP/0/RSP0/CPU0:Router(config-if)# bundle id 50 mode active
RP/0/RSP0/CPU0:Router(config-if)# no shutdown
RP/0/RSP0/CPU0:Router(config-if)# interface TenGigE 0/0/0/27
RP/0/RSP0/CPU0:Router(config-if)# bundleid 50 mode active
```

```
RP/0/RSP0/CPU0:Router(config-if)# no shutdown
RP/0/RSP0/CPU0:Router(config-if)# interface HundredGigE 0/6/0/1
RP/0/RSP0/CPU0:Router(config-if)# bundleid 50 mode active
RP/0/RSP0/CPU0:Router(config-if)# no shutdown
RP/0/RSP0/CPU0:Router(config-if)# root
RP/0/RSP0/CPU0:Router(config)# commit
RP/0/RSP0/CPU0:Router(config)# end
```

The following output is shown for the **show bundle bundle-ether** command:

**show bundle bundle-ether50**

```
Bundle-Ether50
 Status:                  Up
 Local links <active/standby/configured>:  4 / 0 / 4
 Local bandwidth <effective/available>:   130000000 (130000000) kbps
 MAC address (source):           0011.2233.4458 (Chassis pool)
 Inter-chassis link:            No
 Minimum active links / bandwidth:     1 / 1 kbps
 Maximum active links:           64
 Wait while timer:             2000 ms
 Load balancing:              Default
 LACP:                   Operational
  Flap suppression timer:         Off
  Cisco extensions:            Disabled
 mLACP:                   Not configured
 IPv4 BFD:                 Not configured

 Port         Device      State    Port ID     B/W, kbps
 -------------------- --------------- ----------- -------------- ----------
 Te0/0/0/11      Local      Active    0x8000, 0x0002  10000000
   Link is Active
 Te0/0/0/16      Local      Active    0x8000, 0x0003  10000000
   Link is Active
 Te0/0/0/27      Local      Active    0x8000, 0x0004  10000000
   Link is Active
 Hu0/6/0/1       Local      Active    0x8000, 0x0001  100000000
   Link is Active
```

In order to view the weight of a mixed speed bundle, run the **show bundle load-balancing** command. The following is the truncated output of this command.

```
show bundle load-balancing bundle-ether50 location 0/0/cpu0

<snip>

Bundle-Ether50
 Type:         Ether (L3)
 Members <current/max>: 4/64
 Total Weighting:    13
 Load balance:     Default
 Locality threshold:  65
 Avoid rebalancing?   False
 Sub-interfaces:    1

 Member Information:
  Port:         LON ULID BW
  -------------------- --- ---- --
  Hu0/6/0/1        0   0 10
  Te0/0/0/11       1   1  1
  Te0/0/0/16       2   2  1
  Te0/0/0/27       3   3  1
```

```
 Platform Information:
 =====================

         * Bundle Summary Information *
          --------------------------

Interface       : Bundle-Ether50    Ifhandle      : 0x00000ce0
Lag ID         : 1           Virtual Port    : 255
Number of Members   : 4           Local to LC    : Yes
Hash Modulo Index   : 13
MGSCP Operational Mode : No

Member Information:
LON    Interface    ifhandle   SFP  port  slot remote/rack_id
-----  ---------------  ----------  ---  ----  ---- --------------
0    Hu0/6/0/1     0x100001c0  648  116   8    0/0
1    Te0/0/0/11    0x04000380   65   9   2    0/0
2    Te0/0/0/16    0x040004c0   67   8   2    0/0
3    Te0/0/0/27    0x04000780   72   4   2    0/0

</snip>
```

# Example: Configuring a VLAN Link Bundle

The following example shows how to create and bring up two VLANs on an Ethernet bundle:

```
RP/0/RSP0/CPU0:Router(config-subif)# config
RP/0/RSP0/CPU0:Router(config-subif)# interface Bundle-Ether 1
RP/0/RSP0/CPU0:Router(config-ifsubif)# ipv4 address 1.2.3.4/24
RP/0/RSP0/CPU0:Router(config-ifsubif)# bundle minimum-active bandwidth 620000
RP/0/RSP0/CPU0:Router(config-if)# bundle minimum-active links
RP/0/RSP0/CPU0:Router(config-ifsubif)# exit
RP/0/RP0/CPU0:Router(config-subif)# ip addr 20.2.3.4/24
RP/0/RSP0/CPU0:Router(config-subif)# interface Bundle-Ether 1.1
RP/0/RSP0/CPU0:Router(config-subif)# dot1q vlan 10
RP/0/RSP0/CPU0:Router(config-subif) # ip addr 10.2.3.4/24
RP/0/RSP0/CPU0:Router(config-subifif)# no shutdown
RP/0/RSP0/CPU0:Router(config-subifif)# exit
RP/0/RSP0/CPU0:Router(config-if)# interface Bundle-Ether 1.2
RP/0/RSP0/CPU0:Router(config-subif)# dot1q vlan 10
RP/0/RSP0/CPU0:Router(config-subif)Router # ip addr20.2.3.4/24

RP/0/RSP0/CPU0:Router(config-subifif)# no shutdown
RP/0/RSP0/CPU0:Router(config-subifif)# exit
RP/0/RSP0/CPU0:Router(config)# interface gig 0/1/5/7
RP/0/RSP0/CPU0:Router(config-if)# bundle-id 1 mode act
RP/0/RSP0/CPU0:Router(config-if)# commit
RP/0/RSP0/CPU0:Router(config-if)# exit
```

# Example: Configuring a POS Link Bundle

The following example shows how to join two ports to form a Packet-over-SONET (POS) link bundle:

```
RP/0/RSP0/CPU0:Router# config
RP/0/RSP0/CPU0:Router(config)# interface Bundle-POS 5
RP/0/RSP0/CPU0:Router(config-if)#ipv4 address 1.2.3.4/24
RP/0/RSP0/CPU0:Router(config-if)# bundle minimum-active bandwidth 620000
RP/0/RSP0/CPU0:Router(config-if)# bundle minimum-active bandwidth 620000
```

```
RP/0/RSP0/CPU0:Router(config-if)# exit
RP/0/RSP0/CPU0:Router(config)# interface POS 0/0/1/1
RP/0/RSP0/CPU0:Router(config-if)# bundle id 5
RP/0/RSP0/CPU0:Router(config-if)# no shutdown
RP/0/RSP0/CPU0:Router(config-if)# exit
```

# Example: Configuring EFP Load Balancing on an Ethernet Link Bundle

The following example shows how to configure all egressing traffic on the fixed members of a bundle to flow through the same physical member link automatically.

```
RP/0/RP0/CPU0:router# configuration terminal
RP/0/RP0/CPU0:router(config)# interface bundle-ether 1.1 l2transport
RP/0/RP0/CPU0:router(config-subif)#bundle load-balancing hash auto
RP/0/RP0/CPU0:router(config-subif)#
```

The following example shows how to configure all egressing traffic on the fixed members of a bundle to flow through a specified physical member link.

```
RP/0/RP0/CPU0:router# configuration terminal
RP/0/RP0/CPU0:router(config)# interface bundle-ether 1.1 l2transport
RP/0/RP0/CPU0:router(config-subif)#bundle load-balancing hash 1
RP/0/RP0/CPU0:router(config-subif)#
```

# Example: Configuring Multichassis Link Aggregation

This example shows how to configure POAs:

**Active POA**

```
interface Bundle-Ether10
  mlacp iccp-group 1
  mlacp port-priority 10
```

**Standby POA**

```
interface Bundle-Ether10
  mlacp iccp-group 1
  mlacp port-priority 20
```

This example shows how to configure ICCP:

```
redundancy iccp group
   member neighbor 1.2.3.4
   backbone interface GigabitEthernet0/0/0/0
   isolation recovery-delay 30
```

This example shows how to configure mLACP:

```
configure
 redundancy iccp group 100
  mlacp system mac 1.1.1
  mlacp system priority 10
```

```
 mlacp node 1
  interface Bundle-Ether 3
   mac-address 1.1.1
   bundle wait-while 100
   lacp switchover suppress-flaps 300
   mlacp iccp-group 100
```

This example illustrates a switchover:

```
RP/0/0/CPU0:router# show bundle

Bundle-Ether1
 Status:                  Up
 Local links <active/standby/configured>:  1 / 0 / 1
 Local bandwidth <effective/available>:   1000000 (1000000) kbps
 MAC address (source):           0000.deaf.0000 (Configured)
 Minimum active links / bandwidth:     1 / 1 kbps
 Maximum active links:           64
 Wait while timer:             100 ms
 LACP:                   Operational
  Flap suppression timer:         300 ms
 mLACP:                   Operational
  ICCP Group:               1
  Role:                   Active
  Foreign links <active/configured>:    0 / 1
  Switchover type:             Non-revertive
  Recovery delay:             300 s
  Maximize threshold:           Not configured
 IPv4 BFD:                 Not configured

 Port         Device      State    Port ID     B/W, kbps
 -------------------- --------------- ----------- -------------- ----------
 Gi0/0/0/0       Local      Active    0x8001, 0x9001   1000000
   Link is Active
 Gi0/0/0/0       5.4.3.2     Standby   0x8002, 0xa001   1000000
   Link is marked as Standby by mLACP peer


RP/0/0/CPU0:router#mlacp switchover Bundle-Ether 1

This will trigger the peer device (Node 5.4.3.2 in IG 1) to become active for Bundle-Ether1.
 This may result in packet loss on the specified bundle.

Proceed with switch over? [confirm]

RP/0/0/CPU0:Jan 31 23:46:44.666 : BM-DISTRIB[282]: %L2-BM-5-MLACP_BUNDLE_ACTIVE : This
device is no longer the active device for Bundle-Ether1
RP/0/0/CPU0:Jan 31 23:46:44.668 : BM-DISTRIB[282]: %L2-BM-6-ACTIVE : GigabitEthernet0/0/0/0
 is no longer Active as part of Bundle-Ether1 (Not enough links available to meet
minimum-active threshold)

RP/0/0/CPU0:router#show bundle
Mon Jun 7 06:04:17.778 PDT

Bundle-Ether1
 Status:                  mLACP hot standby
 Local links <active/standby/configured>:  0 / 1 / 1
 Local bandwidth <effective/available>:   0 (0) kbps
 MAC address (source):           0000.deaf.0000 (Configured)
 Minimum active links / bandwidth:     1 / 1 kbps
 Maximum active links:           64
 Wait while timer:             100 ms
 LACP:                   Operational
```

```
  Flap suppression timer:         300 ms
 mLACP:                   Operational
  ICCP Group:               1
  Role:                  Standby
  Foreign links <active/configured>:    1 / 1
  Switchover type:             Non-revertive
  Recovery delay:             300 s
  Maximize threshold:           Not configured
 IPv4 BFD:                 Not configured

 Port         Device      State    Port ID     B/W, kbps
 -------------------- --------------- ----------- -------------- ----------
 Gi0/0/0/0       Local      Standby   0x8003, 0x9001   1000000
   mLACP peer is active
 Gi0/0/0/0       5.4.3.2     Active    0x8002, 0xa001   1000000
   Link is Active
RP/0/0/CPU0:router#
```

This example shows how to add a backup pseudowire to a VPLS access pseudowire:

```
l2vpn bridge group bg1
 bridge-domain bd1
  neighbor 101.101.101.101 pw-id 5000
    pw-class class1
      backup neighbor 102.102.102.102 pw-id 3000
        pw-class class1
      !
    !
  !
 !
```

This example shows how to configure one-way pseudowire redundancy behavior when redundancy group is configured:

```
l2vpn pw-class class_mpls
  encapsulation mpls
    redundancy one-way
  !
!
```

This example illustrates an overall MC-LAG configuration:

Topology:

```
DHD           POA 1           POA 2
Gi0/0/0/0 --------------- Gi0/0/0/0
Gi0/0/0/1 --------------- Gi0/0/0/1
Gi0/0/0/2
Gi0/0/0/3 ---------------------------------------- Gi0/0/0/0
Gi0/0/0/4 ---------------------------------------- Gi0/0/0/1
             Gi0/0/0/2         Gi0/0/0/2
             Gi0/0/0/3 --------------- Gi0/0/0/3
             Gi0/0/0/4 --------------- Gi0/0/0/4
```

On POA 1:

```
redundancy
 iccp
```

```
 group 1
  mlacp node 1
  mlacp system mac 000d.000e.000f
  mlacp system priority 1
  member
  neighbor 5.4.3.2
  !
 !
 !
!
interface Bundle-Ether1
 lacp switchover suppress-flaps 300
 mlacp iccp-group 1
 mac-address 0.deaf.0
 bundle wait-while 100
!
interface Loopback0
 ipv4 address 5.4.3.1 255.255.255.255
!
interface GigabitEthernet0/0/0/0
 description Connected to DHD Gi0/0/0/0
 bundle id 1 mode active
 lacp period short
 no shutdown
!
interface GigabitEthernet0/0/0/3
 description Connected to POA2 Gi0/0/0/3
 ipv4 address 1.2.3.1 255.255.255.0
 proxy-arp
 no shutdown
!
router static
 address-family ipv4 unicast
 5.4.3.2/32 1.2.3.2
 !
!
mpls ldp
 router-id 5.4.3.1
 discovery targeted-hello accept
 log
 neighbor
 !
 interface GigabitEthernet0/0/0/3
 !
!
```

On POA 2:

```
redundancy
 iccp
 group 1
  mlacp node 2
  mlacp system mac 000d.000e.000f
  mlacp system priority 1
  member
  neighbor 5.4.3.1
  !
 !
 !
!
interface Bundle-Ether1
 lacp switchover suppress-flaps 300
 mlacp iccp-group 1
```

```
 mac-address 0.deaf.0
 bundle wait-while 100
!
interface Loopback0
 ipv4 address 5.4.3.2 255.255.255.255
!
interface GigabitEthernet0/0/0/0
 description Connected to DHD Gi0/0/0/3
 bundle id 1 mode active
 lacp period short
 no shutdown
!
interface GigabitEthernet0/0/0/3
 description Connected to POA1 Gi0/0/0/3
 ipv4 address 1.2.3.2 255.255.255.0
 proxy-arp
 no shutdown
!
router static
 address-family ipv4 unicast
 5.4.3.1/32 1.2.3.1
 !
!
mpls ldp
 router-id 5.4.3.2
 discovery targeted-hello accept
 log
 neighbor
 !
 interface GigabitEthernet0/0/0/3
 !
!
```

On the DHD:

```
interface Bundle-Ether1
 lacp switchover suppress-flaps 300
 bundle wait-while 100
!
interface GigabitEthernet0/0/0/0
 description Connected to POA1 Gi0/0/0/0
 bundle id 1 mode active
 lacp period short
 no shutdown
!
interface GigabitEthernet0/0/0/3
 description Connected to POA2 Gi0/0/0/0
 bundle id 1 mode active
 lacp period short
 no shutdown
!
```

# Configuration Examples for MGSCP

This figure illustrates a sample network with a single Cisco ASR 9000 Series Router as a dispatcher for a cluster of SCE devices that is used as an example for the sample configurations.

*Figure 29: Cisco ASR 9000 Series Router as Dispatcher for SCE Cluster*

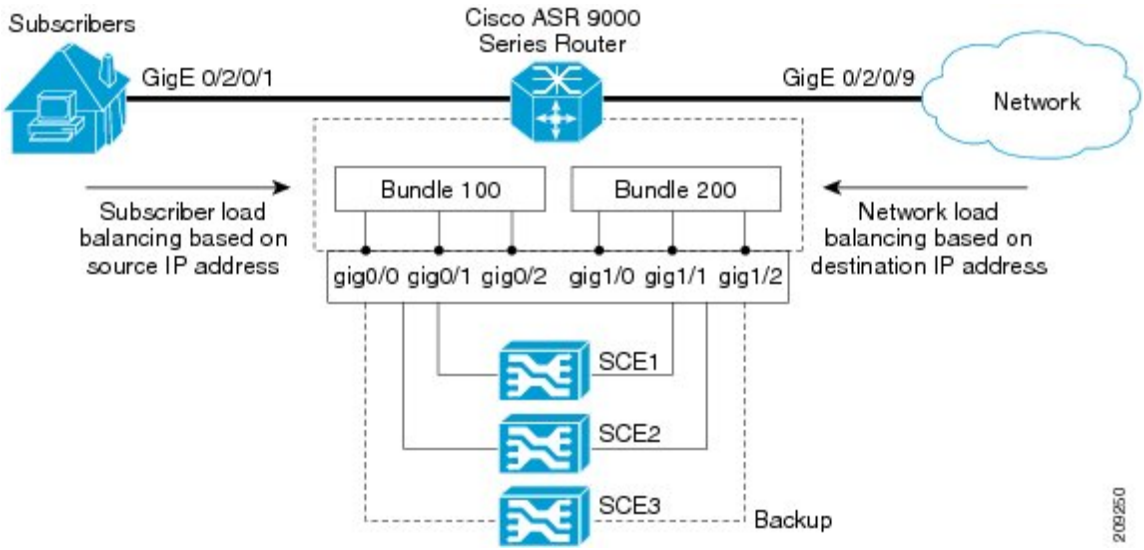


This section includes the following examples:

# Example: Configuring Bundle Interfaces and Member Links

This example shows how to configure the two bundles on the Cisco ASR 9000 Series Router shown in the figure above. Each bundle supports a maximum of two active links (configurations for both bundles must match), with one backup protect link.

The bundle interface members in Ethernet bundle 100 connect the SCE device links for the subscriber side of the network using load balancing based on source IP address. The bundle interface members in Ethernet bundle 200 connect the SCE device links for the core side of the network using load balancing based on destination IP address.

### Subscriber-Facing Access Bundle Configuration

```
interface Bundle-Ether 100
 description Faces-SCE-Subscriber-Side
 vrf access
 ipv4 address 10.0.0.1 255.255.255.0 <<-- Same subnet as Bundle-Ether 200
 lacp cisco enable link-order signaled <<-- Enables Cisco LACP extensions, required for
MGSCP
 bundle load-balancing hash src-ip <<-- Hashes traffic based on source (Subscriber) IP
 bundle maximum-active links 2
!
interface GigabitEthernet 0/0/0/0
 description to SCE1
 bundle id 100 mode active
 bundle port-priority 1
!
interface GigabitEthernet 0/0/0/1
 description to SCE2
 bundle id 100 mode active
 bundle port-priority 1
!
interface GigabitEthernet 0/0/0/3
```

```
 description to SCE3 (backup)
 bundle id 100 mode active
```

#### Core-Facing Bundle Configuration

```
interface Bundle-Ether 200
 description Faces-SCE-Network-Side
 vrf core
 ipv4 address 10.0.0.2 255.255.255.0 <<-- Same subnet as Bundle-Ether100
 lacp cisco enable link-order signaled <<-- Enables Cisco LACP extensions, required for
MGSCP
 bundle load-balancing hash dst-ip <<-- Hashes traffic based on destination (Subscriber)
IP
 bundle maximum active links 2
!
interface GigabitEthernet 0/0/1/0
 description from SCE1
 bundle id 200 mode active
 bundle port-priority 1
!
interface GigabitEthernet 0/0/1/1
 description from SCE2
 bundle id 200 mode active
 bundle port-priority 1
!
interface GigabitEthernet 0/0/1/2
 description from SCE3 (standby)
 bundle id 200 mode active
```

# Examples: Configuring VRFs to Route Traffic to the Bundles

To ensure that the traffic to and from the same subscriber is going through the same port of the SCE, VRFs are recommended. You need to configure two VRFs for MGSCP: One for the access traffic, and one for the core traffic.

The examples in this section also show two different ways that you can route using VRFs with either static or dynamic (OSPF) routing for the bundle interface at the VRF:

## Example: Configuring VRFs with Static Routing

In the following configuration examples, VRFs are established for the core and access sides of the network using IPv4. From there, the bundle interface addresses for each side are each configured as part of the VRF, as well as two physical interfaces. The final piece of the configuration shows how to configure a static route to each VRF using the bundle interfaces.

#### VRF Global Configuration

```
vrf core
 address-family ipv4 unicast
 import route-target
  1:1
 !
 export route-target
  1:1
 !
vrf access
 address-family ipv4 unicast
```

```
 import route-target
  1:1
 !
 export route-target
  1:1
 !
```

### VRF Configuration on Bundle Interfaces

```
interface Bundle-Ether100
 vrf access
 ipv4 address 10.0.0.1 255.255.255.0
!
interface Bundle-Ether200
 vrf core
 ipv4 address 10.0.0.2 255.255.255.0
```

### VRF Configuration on Physical Interfaces

```
interface GigabitEthernet0/2/0/1
 desc Subscriber-facing
 vrf access
 ipv4 address 10.10.1.2 255.255.255.0

interface GigabitEthernet0/2/0/9
 desc Network-facing
 vrf core
 ipv4 address 10.20.1.2 255.255.255.0
 negotiation auto
```

### Static Routing Configuration for the VRFs to the Bundle Interfaces

```
router static
 vrf core
 address-family ipv4 unicast
  0.0.0.0/0 10.0.0.1
 !
 !
 vrf access
 address-family ipv4 unicast
  0.0.0.0/0 10.0.0.2
 !
 !
```

## Example: Configuring VRFs with OSPF Routing

In the following configuration examples, VRFs are established for the core and access sides of the network using IPv4. From there, you configure an OSPF routing instance and area to include the VRFs and associate the bundle and physical interfaces.

### Global VRF Configuration

```
vrf core
 address-family ipv4 unicast
 import route-target
  1:1
 export route-target
```

```
  1:1

vrf access
 address-family ipv4 unicast
 import route-target
  1:1
 export route-target
  1:1
```

### VRF Configuration on Physical Interfaces

```
interface GigabitEthernet0/2/0/1
 vrf access
 ipv4 address 10.10.1.4 255.255.255.0
_
interface GigabitEthernet0/2/0/9
 vrf core
 ipv4 address 10.20.1.4 255.255.255.0
```

### OSPF Routing Configuration for the VRFs and the Bundle and Physical Interfaces

```
router ospf 100
 vrf core
 router-id 10.20.1.2
 area 0
  interface Bundle-Ether200
  interface GigabitEthernet0/2/0/9

 vrf access
 router-id 10.10.1.2
 area 0
  interface Bundle-Ether100
  interface GigabitEthernet0/2/0/1
```

## Example: Configuring MGSCP with ABF to Route Traffic to the Bundles

The following example routes traffic to the bundles using access lists to forward the traffic.

```
ipv4 access-list inbound
!
! Set the nexthop address to be a virtual IP address on the same network
! as the access bundle.
!
 10 permit ipv4 any any nexthop 10.10.1.5
!
ipv4 access-list outbound
!
! Set the nexthop address to be a virtual IP address on the same network
! as the core bundle.
!
10 permit ipv4 any any nexthop 10.20.1.5
!
! Configure static ARP for the virtual IP addresses
!
arp vrf default 10.10.1.5 0024.98eb.bf8a ARPA
arp vrf default 10.20.1.5 0024.98eb.bf8b ARPA

interface Bundle-Ether100
 ipv4 address 10.10.1.2 255.255.255.0
```

```
!
interface Bundle-Ether200
 ipv4 address 10.20.1.2 255.255.255.0
!
interface GigabitEthernet0/2/0/1
 ipv4 address 10.10.1.3 255.255.255.0
 ipv4 access-group inbound
!
interface GigabitEthernet0/2/0/9
ipv4 address 10.20.1.3 255.255.255.0
 ipv4 access-group outbound
!
```

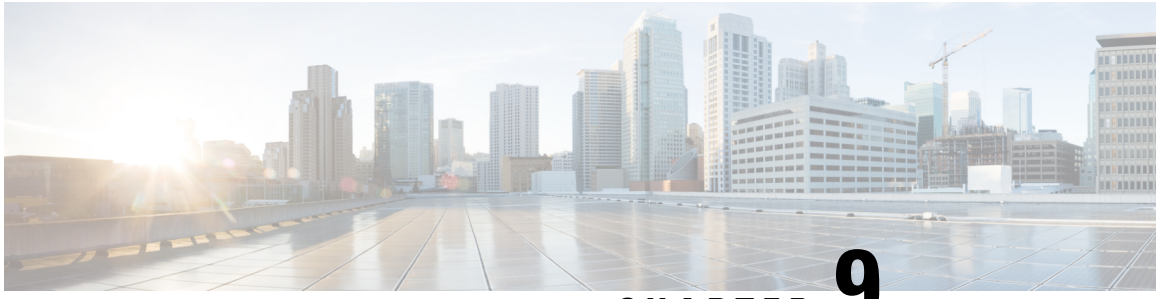

CHAPTER 9

# Configuring Traffic Mirroring

This module describes the configuration of the traffic mirroring feature. Traffic mirroring is sometimes called port mirroring, or switched port analyzer (SPAN).

**Feature History for Traffic Mirroring**

| | |
|---|---|
| Release 3.9.1 | This feature was introduced. |
| Release 4.0.1 | These traffic mirroring features were added:<br>• Traffic mirroring over a pseudowire<br>• Flow or ACL-based traffic mirroring<br>• Layer 3 interface support<br>• Partial packet mirroring |
| Release 5.1.0 | The Sampled Traffic Mirroring feature was introduced. |


- Introduction to Traffic Mirroring, on page 353
- Restrictions for Traffic Mirroring, on page 359
- Configuring Traffic Mirroring, on page 360
- Traffic Mirroring Configuration Examples, on page 373
- Troubleshooting Traffic Mirroring, on page 378


# Introduction to Traffic Mirroring

Traffic mirroring, which is sometimes called port mirroring, or Switched Port Analyzer (SPAN) is a Cisco proprietary feature that enables you to monitor Layer 2 or Layer 3 network traffic passing in, or out of, a set of Ethernet interfaces. You can then pass this traffic to a network analyzer for analysis.

Traffic mirroring copies traffic from one or more Layer 3 or Layer 2 interfaces or sub-interfaces, including Layer 2 link bundle interfaces or sub-interfaces, and sends the copied traffic to one or more destinations for analysis by a network analyzer or other monitoring device. Traffic mirroring does not affect the switching of traffic on the source interfaces or sub-interfaces, and allows the mirrored traffic to be sent to a destination interfaceor sub-interface.

Traffic mirroring was introduced on switches because of a fundamental difference between switches and hubs. When a hub receives a packet on one port, the hub sends out a copy of that packet from all ports except from the one at which the hub received the packet. In the case of switches, after a switch boots, it starts to build up a Layer 2 forwarding table on the basis of the source MAC address of the different packets that the switch receives. After this forwarding table is built, the switch forwards traffic that is destined for a MAC address directly to the corresponding port.

For example, if you want to capture Ethernet traffic that is sent by host A to host B, and both are connected to a hub, just attach a traffic analyzer to this hub. All other ports see the traffic between hosts A and B.

***Figure 30: Traffic Mirroring Operation on a Hub***

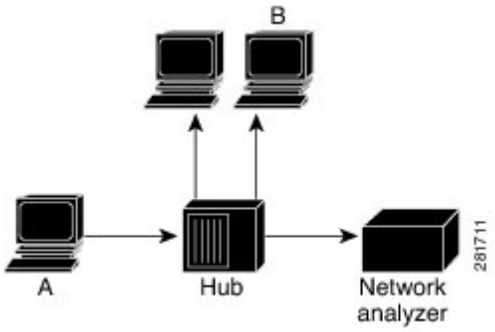


On a switch or router, after the host B MAC address is learned, unicast traffic from A to B is only forwarded to the B port. Therefore, the traffic analyzer does not see this traffic.

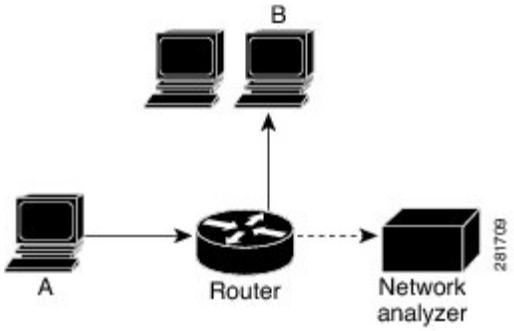


In this configuration, the traffic analyzer captures only traffic that is flooded to all ports, such as:

- Broadcast traffic
- Multicast traffic with CGMP or Internet Group Management Protocol (IGMP) snooping disabled
- Unknown unicast traffic on a switch

An extra feature is necessary that artificially copies unicast packets that host A sends. This extra feature is traffic mirroring. When traffic mirroring is enabled, the traffic analyzer is attached to a port that is configured to receive a copy of every packet that host A sends. This port is called a traffic mirroring port. The other sections of this document describe how you can fine tune this feature.

# Sampled Traffic Mirroring

SPAN is supported on all types of forwarding interfaces of the main interface (port level) such as, L2, L3 interfaces, sub-interface, bundle interface, and BNG interface. But Sampled SPAN is supported only at port level. Sampled SPAN is configurable in ingress direction only. SPAN and Sampled SPAN cannot be configured at the same time on main interface (at port level). When Sampled SPAN is enabled on main interface, SPAN is still configurable on rest of the forwarding interfaces on the port.

When Sampled SPAN is enabled on the underlying physical port and SPAN is configured on a forwarding interface, the packets are mirrored as follows:

- Sampled packet on the physical port is mirrored just to the destination port of the Sampled SPAN session.
- Non-sampled packet is mirrored for each of the regular SPAN session on the associated forwarding interface.

Sampled Traffic Mirroring allows you to:

1. Sample the packets based on a configured interval.
2. Apply Sampled SPAN on a physical port in order to include all forwarding interfaces on that port.
3. Configure the Sampling rate of monitoring that is configured for each source port. You can choose to configure one of these sampling rates; 1K, 2K, 4K, 8K, and 16K. For example, when 4K is configured as the sampling rate, for every 4K packets on the source port one packet is sampled and mirrored to the destination port.
4. Use Sampled SPAN along with Traffic Mirroring.
5. Enable Sampled SPAN on every bundle member, if the physical port is part of a link bundle.
6. Use all destination ports that were supported for SPAN.
7. Enable statistics support on each monitoring session.
8. Truncate and mirror a fixed portion of each mirrored packet (for example, the first 64 bytes of every packet received from the source port is mirrored to the destination port). You can configure the offset or the amount of fixed portion.

You can configure these source to destination combinations in sampled SPAN:

- Physical Port mirrored to Physical Port
- Physical Port mirrored to Pseudo-wire
- Bundle member port mirrored to Physical Port
- Bundle member port mirrored to Pseudo-wire

# Implementing Traffic Mirroring on the Cisco ASR 9000 Series Router

## Traffic Mirroring Terminology

- Ingress traffic—Traffic that enters the switch.
- Egress traffic—Traffic that leaves the switch.

- Source port—A port that is monitored with the use of traffic mirroring. It is also called a monitored port.
- Destination port—A port that monitors source ports, usually where a network analyzer is connected. It is also called a monitoring port.
- Monitor session—A designation for a collection of traffic mirroring configurations consisting of a single destination and, potentially, many source interfaces.

## Characteristics of the Source Port

A source port, also called a monitored port, is a switched or routed port that you monitor for network traffic analysis. In a single local or remote traffic mirroring session, you can monitor source port traffic, such as received (Rx) for ingress traffic, transmitted (Tx) for egress traffic, or bidirectional (for both ingress and egress traffic). Your router can support any number of source ports (up to a maximum number of 800).

A source port has these characteristics:

- It can be any port type, such as Bundle Interface, Gigabit Ethernet, 10-Gigabit Ethernet, or EFPs.

**Note** Bridge group virtual interfaces (BVIs) are not supported.

- Each source port can be monitored in only one traffic mirroring session.
- It cannot be a destination port.
- Partial Packet Mirroring. The first 64 to 256 bytes of the packet can be mirrored.
- Each source port can be configured with a direction (ingress, egress, or both) to monitor. For bundles, the monitored direction applies to all physical ports in the group.

***Figure 31: Network Analysis on a Cisco ASR 9000 RouterWith Traffic Mirroring***

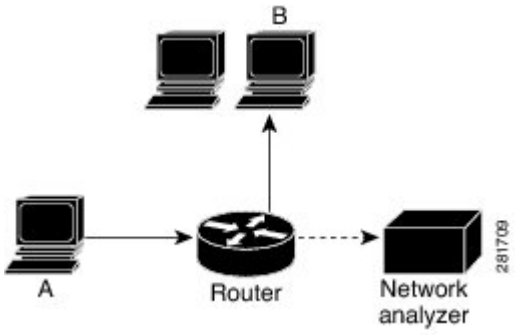


In the figure above, the network analyzer is attached to a port that is configured to receive a copy of every packet that host A sends. This port is called a traffic mirroring port.

## Characteristics of the Monitor Session

A monitor session is a collection of traffic mirroring configurations consisting of a single destination and, potentially, many source interfaces. For any given monitor session, the traffic from the source interfaces (called *source ports*) is sent to the monitoring port (called the *destination port*) . Some optional operations such as VLAN tag imposition and ACL filtering can be performed on the mirrored traffic streams. If there is

more than one source port in a monitoring session, the traffic from the several mirrored traffic streams is combined at the destination port. The result is that the traffic that comes out of the destination port is a combination of the traffic from one or more source ports, and the traffic from each source port may or may not have VLAN push operations or ACLs applied to it.

Monitor sessions have these characteristics:

- A single Cisco ASR 9000 Router can have a maximum of eight monitor sessions.
- A single monitor session can have only one destination port.
- A single destination port can belong to only one monitor session.
- A single Cisco ASR 9000 Router can have a maximum of 800 source ports.
- A monitor session can have a maximum of 800 source ports, as long as the maximum number of source ports from all monitoring sessions does not exceed 800.

## Characteristics of the Destination Port

Each local session or remote destination session must have a destination port (also called a monitoring port) that receives a copy of the traffic from the source ports.

A destination port has these characteristics:

- A destination port must reside on the same router as the source port.
- A destination port can be any Ethernet physical port, EFP, pseudowire, but not a bundle interface.
- A destination port can only be a Layer 2 transport interface. An L3 interface as a SPAN destination cannot be configured on the Cisco ASR 9000 Series Router.
- A destination port can be a trunk (main) interface or a subinterface.
- At any one time, a destination port can participate in only one traffic mirroring session. A destination port in one traffic mirroring session cannot be a destination port for a second traffic mirroring session. In other words, no two monitor sessions can have the same destination port.
- A destination port cannot also be a source port.
- ***Figure 32: Network Analysis on a Cisco ASR 9000 Router With Traffic Mirroring***

| | | | |
|---|---|---|---|
| 1 | Source traffic mirroring ports (can be ingress or | 2 | Destination traffic mirroring port |

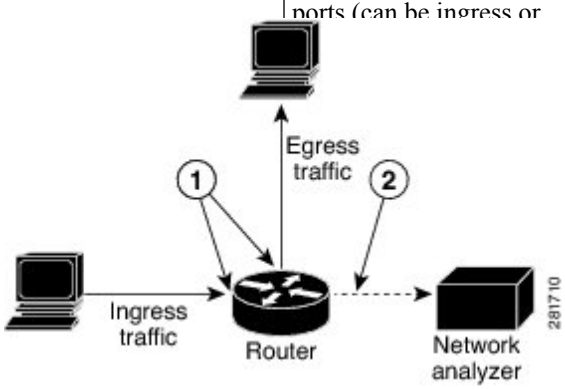

## Supported Traffic Mirroring Types

These traffic mirroring types are supported:

- Local traffic mirroring. This is the most basic form of traffic mirroring. The network analyzer or sniffer is directly attached to the destination interface. In other words, all monitored ports are all located on the same switch as the destination port.
- Remote traffic mirroring (known as R-SPAN). In this case, the network analyzer is not attached directly to the destination interface, but is on a VLAN accessible to the switch. For example, the destination interface is a sub-interface with a VLAN encapsulation.

  A restricted form of remote traffic mirroring can be implemented by sending traffic to a single destination port that pushes a VLAN tag, instead of switching through a bridge domain. Remote traffic mirroring:

  - Allows decoupling of the network analyzer and destination, but there is no on-the-box redundancy.
  - Allows multiple remote network analyzers as long as they can attach to the traffic mirroring VLAN.

    This is supported on Cisco IOS XR software because the destination port is an EFP that can push a VLAN tag.
- Pseudowire traffic mirroring (known as PW-SPAN in Cisco IOS Software). Instead of using a standard destination interface, traffic is mirrored to a remote site through an MPLS pseudowire.
- ACL-based traffic mirroring. Traffic is mirrored based on the configuration of the global interface ACL.
- Partial Packet Mirroring. The first 64 to 256 bytes of the packet can be mirrored.
- Layer 2 or Layer 3 traffic mirroring is supported. Both Layer 2 and Layer 3 source ports can be mirrored.

## Pseudowire Traffic Mirroring

You can configure the traffic mirroring destination port to be a pseudowire rather than a physical port. In this case, the system mirrors the designated traffic on the source port over the pseudowire to a central location. This allows the centralization of expensive network traffic analysis tools.

Because the pseudowire carries only mirrored traffic, this traffic is unidirectional. There must not be any traffic coming from the remote provider edge.

In such a pseudowire traffic mirroring scenario, though the system mirrors traffic successfully, the statistics for sent pseudowire packet statistics remains zero.

To protect the pseudowire traffic mirroring path against network failures, it is possible to configure a traffic engineering tunnel as the preferred path and enable fast reroute protection for the pseudowire.

*Figure 33: Pseudowire Traffic Mirroring*

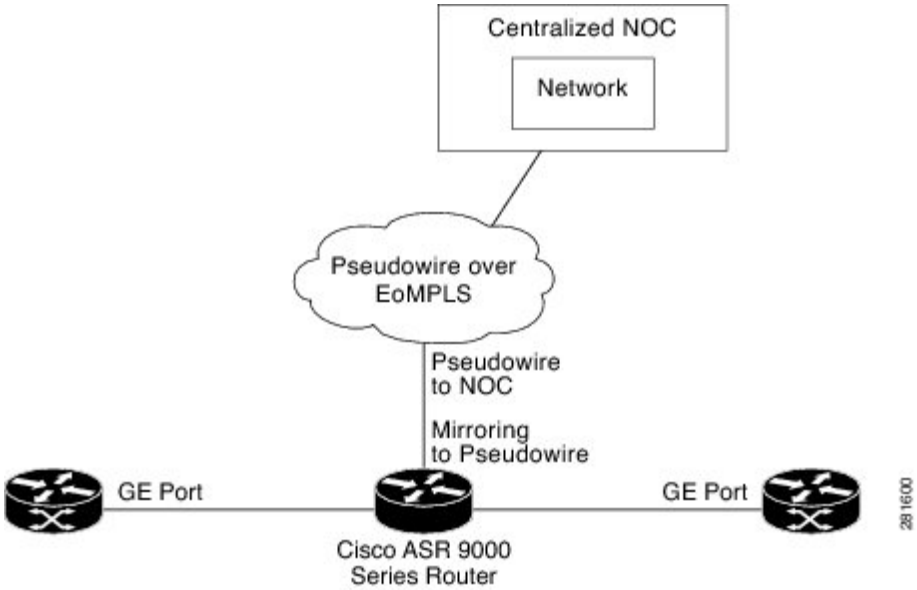


## ACL-Based Traffic Mirroring

You can mirror traffic based on the definition of a global interface access list (ACL). If you are mirroring Layer 2 traffic, the ACL is configured using the **ethernet-services access-list** command with the **capture** keyword. When you are mirroring Layer 3 traffic, the ACL is configured using the **ipv4 access-list** or **ipv6 access-list** command with the **capture** keyword. The **permit** and **deny** commands determine the behavior of regular traffic. The **capture** keyword designates that the packet is to be mirrored to the destination port.

# Restrictions for Traffic Mirroring

A maximum of eight monitoring sessions are supported. You can configure 800 source ports on a single monitoring session or an aggregate of 800 source ports over eight monitoring sessions.

These forms of traffic mirroring are not supported:

- Mirroring traffic to a GRE tunnel (also known as Encapsulated Remote Switched Port Analyzer [ER-SPAN] in Cisco IOS Software).
- Mirroring traffic from a full bridge domain (also known as VLAN-based SPAN in Cisco IOS Software).
- Mirroring traffic from Cisco ASR 9000 SIP-700 based SPA interfaces, such as T1/E1, T3/E3, OC3, OC12, OC48, OC192, STM1, STM4, STM16, STM64, SONET/SDH, TDM, or serial interfaces.
- Mirroring traffic on an individual bundle member interface is not supported. SPAN must be configured only on a bundle interface and it is applied to all members.
- If the destination of traffic mirroring is an nV satellite port and ICL is configured with a bundle interface, then replicated packets are not forwarded to the destination.
- The system does not support MAP-T inline and SPAN on the same NPU.
- To avoid traffic loss, disable SPAN, if enabled on MAP-E/T service-inline interfaces.

- SPAN is not supported on those line card ports that are carrying traffic bound for a VSM. This behaviour is observed only on the Cisco ASR 9000 High Density 100GE Ethernet line cards and Cisco ASR 9000 Series 24-Port and 48-Port Dual-Rate 10GE/1GE line cards.

## Restrictions of Sampled Traffic Mirroring

These are the restrictions of Sampled Traffic Mirroring:

- Sampled SPAN can be applied to ingress traffic only.
- The source for sampled SPAN must be on Cisco ASR 9000 Enhanced Ethernet Line Cards.
- Sampled SPAN works only on physical interfaces.
- The source port cannot be on bundles; however it can be applied to bundle member links.
- Sampled SPAN does not work on sub-interfaces, however it can be applied to a physical port with sub-interfaces(main port).
- Only these intervals are accepted: 512, 1K, 2K, 4K, 8K, and 16K. The default interval is 16K.
- Sampled SPAN is configurable at physical port level only.
- Sampled SPAN rate is ingress port specific and not session specific. This means that a destination port can take multiple ingress sampled ports at different sampling rates.
- In the case of a bundle interface, you must configure Sampled SPAN on all the physical ports that are members of the bundle.
- ACL filtering is not supported for Sampled Mirrored Traffic.

## Performance Impact with Traffic Mirroring

It is recommended that you do not mirror more than 15% of your total transit traffic. On the Cisco ASR 9000 Ethernet Line Card, that uses Ten Gigabit Ethernet interfaces or bundle interfaces there is a limit of 1.5G of data on each of the ingress and egress traffic that can be mirrored. This limitation is not applicable on the Cisco ASR 9000 Enhanced Ethernet Line Card.

# Configuring Traffic Mirroring

These tasks describe how to configure traffic mirroring:

## How to Configure Local Traffic Mirroring

### SUMMARY STEPS

1. **configure**
2. **monitor-session** *session-name*
3. **destination interface** *dest-interface*
4. **exit**

5. **interface** *source-interface*
6. **l2transport**
7. **monitor-session** *session-name* [**direction** {**rx-only** | **tx-only**]
8. **end** or **commit**
9. **show monitor-session [session-name] status** [**detail**] [**error**]

## DETAILED STEPS

| | Command or Action | Purpose |
|---|---|---|
| **Step 1** | **configure**<br>**Example:**<br>`RP/0/RSP0/CPU0:router# configure` | Enters global configuration mode. |
| **Step 2** | **monitor-session** *session-name*<br>**Example:**<br>`RP/0/RSP0/CPU0:router(config)# monitor-session mon1`<br>`RP/0/RSP0/CPU0:router(config-mon)#` | Defines a monitor session and enters monitor session configuration mode. |
| **Step 3** | **destination interface** *dest-interface*<br>**Example:**<br>`RP/0/RSP0/CPU0:router(config-mon)# destination interface gigabitethernet0/0/0/15` | Specifies the destination interface to which traffic is replicated. |
| **Step 4** | **exit**<br>**Example:**<br>`RP/0/RSP0/CPU0:router(config-mon)# exit`<br>`RP/0/RSP0/CPU0:router(config)#` | Exits monitor session configuration mode and returns to global configuration mode. |
| **Step 5** | **interface** *source-interface*<br>**Example:**<br>`RP/0/RSP0/CPU0:router(config)# interface gigabitethernet0/0/0/11` | Enters interface configuration mode for the specified interface. The interface number is entered in *rack*/*slot*/*module*/*port* notation. For more information about the syntax for the router, use the question mark (?) online help function. |
| **Step 6** | **l2transport**<br>**Example:**<br>`RP/0/RSP0/CPU0:router(config-if)# l2transport` | (Optional) Enables Layer 2 transport mode on the interface and enters Layer 2 transport configuration mode.<br>**Note** • Use the **l2transport** command to mirror all traffic types. |
| **Step 7** | **monitor-session** *session-name* [**direction** {**rx-only** \| **tx-only**]<br>**Example:** | Specifies the monitor session to be used on this interface. Use the **direction** keyword to specify that only ingress or only egress traffic is mirrored. |

| | Command or Action | Purpose |
|---|---|---|
| | `RP/0/RSP0/CPU0:router(config-if-l2)# monitor-session mon1` | |
| **Step 8** | **end** or **commit**<br>**Example:**<br>`RP/0/RSP0/CPU0:router(config-if-l2)# end`<br>or<br>`RP/0/RSP0/CPU0:router(config-if-l2)# commit` | Saves configuration changes.<br>• When you issue the **end** command, the system prompts you to commit changes:<br>`Uncommitted changes found, commit them before exiting (yes/no/cancel)? [cancel]:`<br>- Entering **yes** saves configuration changes to the running configuration file, exits the configuration session, and returns the router to EXEC mode.<br>- Entering **no** exits the configuration session and returns the router to EXEC mode without committing the configuration changes.<br>- Entering **cancel** leaves the router in the current configuration session without exiting or committing the configuration changes.<br>• Use the **commit** command to save the configuration changes to the running configuration file and remain within the configuration session. |
| **Step 9** | **show monitor-session [session-name] status** [**detail**] [**error**]<br>**Example:**<br>`RP/0/RSP0/CPU0:router# show monitor-session` | Displays information about the monitor session. |

# How to Configure Remote Traffic Mirroring

## SUMMARY STEPS

1. **configure**
2. **monitor-session** *session-name*
3. **destination interface** *dest-subinterface*
4. **exit**
5. **interface** *dest-subinterface* **l2transport**
6. **encapsulation dot1q** *vlan*
7. **rewrite ingress tag pop** *tag-to-remove*
8. **interface** *source-subinterface* [**l2transport**]
9. **monitor-session** *session-name* [**direction** {**rx-only** | **tx-only**]
10. **end** or **commit**
11. **show monitor-session [session-name] status** [**detail**] [**error**]

## DETAILED STEPS

| | Command or Action | Purpose |
|---|---|---|
| **Step 1** | **configure**<br>**Example:**<br>`RP/0/RSP0/CPU0:router# configure` | Enters global configuration mode. |
| **Step 2** | **monitor-session** *session-name*<br>**Example:**<br>`RP/0/RSP0/CPU0:router(config)# monitor-session mon1`<br>`RP/0/RSP0/CPU0:router(config-mon)#` | Defines a monitor session and enters monitor session configuration mode. |
| **Step 3** | **destination interface** *dest-subinterface*<br>**Example:**<br>`RP/0/RSP0/CPU0:router(config-mon)# destination interface gigabitethernet0/0/0/15` | Specifies the destination subinterface to which traffic is replicated. |
| **Step 4** | **exit**<br>**Example:**<br>`RP/0/RSP0/CPU0:router(config-mon)# exit`<br>`RP/0/RSP0/CPU0:router(config)#` | Exits monitor session configuration mode and returns to global configuration mode. |
| **Step 5** | **interface** *dest-subinterface* **l2transport**<br>**Example:**<br>`RP/0/RSP0/CPU0:router(config)# interface gigabitethernet0/0/0/11.10 l2transport` | Enters interface configuration mode for the specified sub-interface. The interface number is entered in *rack*/*slot*/*module*/*port* notation. For more information about the syntax for the router, use the question mark (?) online help function.<br>The **l2transport** keyword is used to enable Layer 2 transport mode on the destination subinterface. |
| **Step 6** | **encapsulation dot1q** *vlan*<br>**Example:**<br>`RP/0/RSP0/CPU0:router(config-if)# encapsulation dot1q 1` | Specifies 802.1Q encapsulation and the VLAN number that is used. |
| **Step 7** | **rewrite ingress tag pop** *tag-to-remove*<br>**Example:**<br>`RP/0/RSP0/CPU0:router(config-if)# rewrite ingress tag pop 1` | Specifies to remove the outer tag only for the EFP. |
| **Step 8** | **interface** *source-subinterface* [**l2transport**]<br>**Example:** | Enters interface configuration mode for the specified subinterface. The interface number is entered in *rack*/*slot*/*module*/*port* notation. For more information about |

| | Command or Action | Purpose |
|---|---|---|
| | `RP/0/RSP0/CPU0:router(config)# interface gigabitethernet0/0/0/11.10 l2transport` | the syntax for the router, use the question mark (?) online help function.<br>To configure a Layer 2 subinterface to be the source interface, use the **l2transport** keyword to enable Layer 2 transport mode on the subinterface. |
| **Step 9** | **monitor-session** *session-name* [**direction** {**rx-only** \| **tx-only**]<br>**Example:**<br>`RP/0/RSP0/CPU0:router(config-if-l2)# monitor-session mon1` | Specifies the monitor session to be used on this interface. Use the **direction** keyword to specify that only ingress or egress traffic is mirrored. |
| **Step 10** | **end** or **commit**<br>**Example:**<br>`RP/0/RSP0/CPU0:router(config-if)# end`<br>or<br>`RP/0/RSP0/CPU0:router(config-if)# commit` | Saves configuration changes.<br>• When you issue the **end** command, the system prompts you to commit changes:<br>`Uncommitted changes found, commit them before exiting (yes/no/cancel)? [cancel]:`<br>- Entering **yes** saves configuration changes to the running configuration file, exits the configuration session, and returns the router to EXEC mode.<br>- Entering **no** exits the configuration session and returns the router to EXEC mode without committing the configuration changes.<br>- Entering **cancel** leaves the router in the current configuration session without exiting or committing the configuration changes.<br>• Use the **commit** command to save the configuration changes to the running configuration file and remain within the configuration session.<br>Use the **commit** command to save the configuration changes to the running configuration file and remain within the configuration session. |
| **Step 11** | **show monitor-session [session-name] status** [**detail**] [**error**]<br>**Example:**<br>`RP/0/RSP0/CPU0:router# show monitor-session` | Displays information about the traffic mirroring session. |

# How to Configure Traffic Mirroring over Pseudowire

## SUMMARY STEPS

1. **configure**
2. **monitor-session** *session-name*
3. **destination psuedowire**
4. **exit**
5. **interface** *source-interface*
6. **l2transport**
7. **monitor-session** *session-name* [**direction** {**rx-only** | **tx-only**} ]
8. **exit**
9. **exit**
10. **exit**
11. **l2vpn**
12. **pw-class** *class-name*
13. **encapsulation mpls**
14. **exit**
15. **exit**
16. **xconnect group** *group-name*
17. **p2p** *xconnect-name*
18. **monitor-session** *session-name*
19. **neighbor** *peer-ip* **pw-id** *pseudowire-id*
20. **pw-class** *class-name*
21. **end** or **commit**
22. **show monitor-session [session-name]** **status** [**detail**] [**error**]

## DETAILED STEPS

| | Command or Action | Purpose |
|---|---|---|
| **Step 1** | **configure**<br>**Example:**<br>`RP/0/RSP0/CPU0:router# configure` | Enters global configuration mode. |
| **Step 2** | **monitor-session** *session-name*<br>**Example:**<br>`RP/0/RSP0/CPU0:router(config)# monitor-session mon1`<br>`RP/0/RSP0/CPU0:router(config-mon)#` | Defines a monitor session and enters monitor session configuration mode. |
| **Step 3** | **destination psuedowire**<br>**Example:**<br>`RP/0/RSP0/CPU0:router(config-mon)# destination pseudowire` | Specifies that the traffic is replicated to a pseudowire. |

| | Command or Action | Purpose |
|---|---|---|
| **Step 4** | **exit**<br>**Example:**<br>`RP/0/RSP0/CPU0:router(config-mon)# exit`<br>`RP/0/RSP0/CPU0:router(config)#` | Exits monitor session configuration mode and returns to global configuration mode. |
| **Step 5** | **interface** *source-interface*<br>**Example:**<br>`RP/0/RSP0/CPU0:router(config)# interface gigabitethernet0/0/0/11.10` | Enters interface configuration mode for the specified interface. The interface number is entered in *rack*/*slot*/*module*/*port* notation. For more information about the syntax for the router, use the question mark (?) online help function. |
| **Step 6** | **l2transport**<br>**Example:**<br>`RP/0/RSP0/CPU0:router(config-if)# l2transport` | (Optional) Enables Layer 2 transport mode on the subinterface and enters Layer 2 transport configuration mode.<br>**Note** • Use the **l2transport** command to mirror all traffic types. |
| **Step 7** | **monitor-session** *session-name* [**direction** {**rx-only** \| **tx-only**} ]<br>**Example:**<br>`RP/0/RSP0/CPU0:router(config-if-l2)# monitor-session mon1` | Specifies the monitor session to be used on this interface. Use the **direction** keyword to specify that only ingress or egress traffic is mirrored. |
| **Step 8** | **exit**<br>**Example:**<br>`RP/0/RSP0/CPU0:router(config-if-mon)# exit`<br>`RP/0/RSP0/CPU0:router(config-if-l2)#` | Exits monitor session configuration mode and returns to l2transport configuration mode. |
| **Step 9** | **exit**<br>**Example:**<br>`RP/0/RSP0/CPU0:router(config-if-l2)# exit`<br>`RP/0/RSP0/CPU0:router(config-if)#` | Exits l2transport configuration mode and returns to interface configuration mode. |
| **Step 10** | **exit**<br>**Example:**<br>`RP/0/RSP0/CPU0:router(config-if)# exit`<br>`RP/0/RSP0/CPU0:router(config)#` | Exits interface configuration mode and returns to global configuration mode. |
| **Step 11** | **l2vpn**<br>**Example:**<br>`RP/0/RSP0/CPU0:router(config)# l2vpn`<br>`RP/0/RSP0/CPU0:router(config-l2vpn)#` | Enters Layer 2 VPN configuration mode. |

| | Command or Action | Purpose |
|---|---|---|
| **Step 12** | **pw-class** *class-name*<br>**Example:**<br>`RP/0/RSP0/CPU0:router(config-l2vpn)# pw-class pw1` | Configures a pseudowire class template and enters pseudowire class template configuration mode. |
| **Step 13** | **encapsulation mpls**<br>**Example:**<br>`RP/0/RSP0/CPU0:router(config-l2vpn-pwc)# encapsulation mpls` | Configures the pseudowire encapsulation to MPLS. |
| **Step 14** | **exit**<br>**Example:**<br>`RP/0/RSP0/CPU0:router(config-l2vpn-pwc-mpls)# exit`<br>`RP/0/RSP0/CPU0:router(config-l2vpn-pwc)` | Exits pseudowire encapsulation configuration mode. |
| **Step 15** | **exit**<br>**Example:**<br>`RP/0/RSP0/CPU0:router(config-l2vpn-pwc)# exit`<br>`RP/0/RSP0/CPU0:router(config-l2vpn)` | Exits pseudowire class template configuration mode. |
| **Step 16** | **xconnect group** *group-name*<br>**Example:**<br>`RP/0/RSP0/CPU0:router(config-l2vpn)# xconnect group g1` | Configures a group cross connect. |
| **Step 17** | **p2p** *xconnect-name*<br>**Example:**<br>`RP/0/RSP0/CPU0:router(config-l2vpn-xc)# p2p xc1` | Configures a point-to-point cross connect. |
| **Step 18** | **monitor-session** *session-name*<br>**Example:**<br>`RP/0/RSP0/CPU0:router(config-l2vpn-xc-p2p)# monitor-session mon1` | Attaches a traffic mirroring session to the point-to-point cross connect. |
| **Step 19** | **neighbor** *peer-ip* **pw-id** *pseudowire-id*<br>**Example:**<br>`RP/0/RSP0/CPU0:router(config-l2vpn-xc-p2p)# neighbor 192.168.2.2 pw-id 3` | Configures the point-to-point cross connect. |
| **Step 20** | **pw-class** *class-name*<br>**Example:** | Specifies the pseudowire class template to use for the cross connect. |

| | Command or Action | Purpose |
|---|---|---|
| | `RP/0/RSP0/CPU0:router(config-l2vpn-xc-p2p)# pw-class pw1` | |
| **Step 21** | **end** or **commit**<br>**Example:**<br>`RP/0/RSP0/CPU0:router(config-l2vpn-xc-p2p-pw)# end`<br>or<br>`RP/0/RSP0/CPU0:router(config-l2vpn-xc-p2p-pw)# commit` | Saves configuration changes.<br>• When you issue the **end** command, the system prompts you to commit changes:<br>`Uncommitted changes found, commit them before exiting (yes/no/cancel)? [cancel]:`<br>- Entering **yes** saves configuration changes to the running configuration file, exits the configuration session, and returns the router to EXEC mode.<br>- Entering **no** exits the configuration session and returns the router to EXEC mode without committing the configuration changes.<br>- Entering **cancel** leaves the router in the current configuration session without exiting or committing the configuration changes.<br>• Use the **commit** command to save the configuration changes to the running configuration file and remain within the configuration session.<br>Use the **commit** command to save the configuration changes to the running configuration file and remain within the configuration session. |
| **Step 22** | **show monitor-session [session-name] status [detail] [error]**<br>**Example:**<br>`RP/0/RSP0/CPU0:router# show monitor-session` | Displays information about the traffic mirroring session. |

# How to Configure ACL-Based Traffic Mirroring

### Before you begin

The global interface ACL should be configured using one of these commands with the **capture** keyword:

- **ipv4 access-list**
- **ipv6 access-list**
- **ethernet-services access-list**

For more information, refer to the *Cisco ASR 9000 Series Aggregation Services Router IP Addresses and Services Command Reference* or the *ASR 9000 Series Aggregation Services Router L2 VPN and Ethernet Services Command Reference*.

## SUMMARY STEPS

1. **configure**
2. **monitor-session** *session-name*
3. **destination interface** *dest-interface*
4. **exit**
5. **interface** *source-interface*
6. **l2transport**
7. **exit**
8. **ethernet-services access-group** *access-list-name* [**ingress** | **egress**]
9. **monitor-session** *session-name* [ipv4|ipv6] [direction {rx-only|tx-only}]
10. **acl**
11. **end** or **commit**
12. **show monitor-session [session-name] status** [**detail**] [**error**]

## DETAILED STEPS

| | Command or Action | Purpose |
|---|---|---|
| **Step 1** | **configure**<br>**Example:**<br>`RP/0/RSP0/CPU0:router# configure` | Enters global configuration mode. |
| **Step 2** | **monitor-session** *session-name*<br>**Example:**<br>`RP/0/RSP0/CPU0:router(config)# monitor-session mon1`<br>`RP/0/RSP0/CPU0:router(config-mon)#` | Defines a monitor session and enters monitor session configuration mode. |
| **Step 3** | **destination interface** *dest-interface*<br>**Example:**<br>`RP/0/RSP0/CPU0:router(config-mon)# destination interface gigabitethernet0/0/0/15` | Specifies the destination interface to which traffic should be replicated. |
| **Step 4** | **exit**<br>**Example:**<br>`RP/0/RSP0/CPU0:router(config-mon)# exit`<br>`RP/0/RSP0/CPU0:router(config)#` | Exits monitor session configuration mode and returns to global configuration mode. |
| **Step 5** | **interface** *source-interface*<br>**Example:** | Enters interface configuration mode for the specified interface. The interface number is entered in *rack*/*slot*/*module*/*port* notation. For more information about |

| | Command or Action | Purpose |
|---|---|---|
| | `RP/0/RSP0/CPU0:router(config)# interface gigabitethernet0/0/0/11` | the syntax for the router, use the question mark (?) online help function. |
| **Step 6** | **l2transport**<br>**Example:**<br>`RP/0/RSP0/CPU0:router(config-if)# l2transport` | (Optional) Enables Layer 2 transport mode on the subinterface and enters Layer 2 transport configuration mode.<br>**Note** • Use the **l2transport** command to mirror all traffic types. |
| **Step 7** | **exit**<br>**Example:**<br>`RP/0/RSP0/CPU0:router(config-if-l2)# exit`<br>`RP/0/RSP0/CPU0:router(config-if)#` | Exits Layer 2 transport configuration mode and returns to interface configuration mode. |
| **Step 8** | **ethernet-services access-group** *access-list-name* [**ingress** \| **egress**]<br>**Example:**<br>`RP/0/RSP0/CPU0:router(config-if)# ethernet-services access-group acl1 ingress` | Associates the access list definition with the interface being mirrored. |
| **Step 9** | **monitor-session** *session-name* [ipv4\|ipv6] [direction {rx-only\|tx-only}]<br>**Example:**<br>`RP/0/RSP0/CPU0:router(config-if)# monitor-session mon1 direction rx-only` | Specifies the monitor session to be used on this interface. |
| **Step 10** | **acl**<br>**Example:**<br>`RP/0/RSP0/CPU0:router(config-if-mon)# acl` | Specifies that the traffic mirrored is according to the defined global interface ACL. |
| **Step 11** | **end** or **commit**<br>**Example:**<br>`RP/0/RSP0/CPU0:router(config-if)# end`<br>or<br>`RP/0/RSP0/CPU0:router(config-if)# commit` | Saves configuration changes.<br>• When you issue the **end** command, the system prompts you to commit changes:<br>`Uncommitted changes found, commit them before exiting (yes/no/cancel)? [cancel]:`<br>- Entering **yes** saves configuration changes to the running configuration file, exits the configuration session, and returns the router to EXEC mode.<br>- Entering **no** exits the configuration session and returns the router to EXEC mode without committing the configuration changes. |

| | Command or Action | Purpose |
|---|---|---|
| | | - Entering **cancel** leaves the router in the current configuration session without exiting or committing the configuration changes.<br>• Use the **commit** command to save the configuration changes to the running configuration file and remain within the configuration session. |
| **Step 12** | **show monitor-session [session-name] status [detail] [error]**<br>**Example:**<br>`RP/0/RSP0/CPU0:router# show monitor-session` | Displays information about the monitor session. |

## Troubleshooting ACL-Based Traffic Mirroring

Take note of these configuration issues:

- Even when the **acl** command is configured on the source mirroring port, if the ACL configuration command does not use the **capture** keyword, no traffic gets mirrored.
- If the ACL configuration uses the **capture** keyword, but the **acl** command is not configured on the source port, traffic is mirrored, but no access list configuration is applied.
- All ingress traffic is mirrored, regardless of the ACL definition; only egress traffic permitted in the ACL definition is mirrored.

This example shows both the **capture** keyword in the ACL definition and the **acl** command configured on the interface:

```
monitor-session tm_example
!
ethernet-services access-list tm_filter
 10 deny 0000.1234.5678 0000.abcd.abcd any capture
!
interface GigabitEthernet0/2/0/0
 monitor-session tm_example direction rx-only
 acl
!
 l2transport
 !
 ethernet-services access-group tm_filter ingress
end
```

# How to Configure Partial Packet Mirroring

### SUMMARY STEPS

1. **configure**
2. **monitor-session** *session-name*
3. **destination interface** *dest-interface*

4. **exit**
5. **interface** *source-interface*
6. **monitor-session** *session-name*[**direction** {**rx-only** | **tx-only**]
7. **mirror first** *bytes*
8. **end** or **commit**
9. **show monitor-session [session-name] status**

## DETAILED STEPS

| | Command or Action | Purpose |
|---|---|---|
| **Step 1** | **configure**<br>**Example:**<br>`RP/0/RSP0/CPU0:router# configure` | Enters global configuration mode. |
| **Step 2** | **monitor-session** *session-name*<br>**Example:**<br>`RP/0/RSP0/CPU0:router(config)# monitor-session mon1`<br>`RP/0/RSP0/CPU0:router(config-mon)#` | Defines a monitor session and enters monitor session configuration mode. |
| **Step 3** | **destination interface** *dest-interface*<br>**Example:**<br>`RP/0/RSP0/CPU0:router(config-mon)# destination interface gigabitethernet0/0/0/15` | Specifies the destination interface to which traffic should be replicated. |
| **Step 4** | **exit**<br>**Example:**<br>`RP/0/RSP0/CPU0:router(config-mon)# exit`<br>`RP/0/RSP0/CPU0:router(config)#` | Exits monitor session configuration mode and returns to global configuration mode. |
| **Step 5** | **interface** *source-interface*<br>**Example:**<br>`RP/0/RSP0/CPU0:router(config)# interface gigabitethernet0/0/0/11.10` | Enters interface configuration mode for the specified interface. The interface number is entered in *rack*/*slot*/*module*/*port* notation. For more information about the syntax for the router, use the question mark (?) online help function. |
| **Step 6** | **monitor-session** *session-name*[**direction** {**rx-only** \| **tx-only**]<br>**Example:**<br>`RP/0/RSP0/CPU0:router(config-if-l2)# monitor-session mon1` | Specifies the monitor session to be used on this interface. Use the **direction** keyword to specify that only ingress or egress traffic is mirrored. |
| **Step 7** | **mirror first** *bytes*<br>**Example:** | Specifies the number of bytes of the packet to mirror. Values can range from 64 to 256. |

| | Command or Action | Purpose |
|---|---|---|
| | `RP/0/RSP0/CPU0:router(config-if-mon)# mirror first bytes` | |
| **Step 8** | **end** or **commit**<br>**Example:**<br>`RP/0/RSP0/CPU0:router(config-if)# end`<br>or<br>`RP/0/RSP0/CPU0:router(config-if)# commit` | Saves configuration changes.<br>• When you issue the **end** command, the system prompts you to commit changes:<br>`Uncommitted changes found, commit them before exiting (yes/no/cancel)? [cancel]:`<br>- Entering **yes** saves configuration changes to the running configuration file, exits the configuration session, and returns the router to EXEC mode.<br>- Entering **no** exits the configuration session and returns the router to EXEC mode without committing the configuration changes.<br>- Entering **cancel** leaves the router in the current configuration session without exiting or committing the configuration changes.<br>• Use the **commit** command to save the configuration changes to the running configuration file and remain within the configuration session. |
| **Step 9** | **show monitor-session [session-name] status**<br>**Example:**<br>`RP/0/RSP0/CPU0:router# show monitor-session` | Displays information about the traffic mirroring session. |

# Traffic Mirroring Configuration Examples

This section contains examples of how to configure traffic mirroring:

## Traffic Mirroring with Physical Interfaces (Local): Example

This example shows a basic configuration for traffic mirroring with physical interfaces. When traffic flows over the point-to-point cross connect between gig0/2/0/19 and gig0/2/0/11, packets received and transmitted on gig0/2/0/19 are also mirrored to gig0/2/0/15.

```
RP/0/RSP0/CPU0:router# configure
RP/0/RSP0/CPU0:router(config)# monitor-session ms1
RP/0/RSP0/CPU0:router(config-mon)# destination interface gig0/2/0/15
RP/0/RSP0/CPU0:router(config-mon)# commit

RP/0/RSP0/CPU0:router# configure
RP/0/RSP0/CPU0:router(config)# interface gig0/2/0/11
```

```
RP/0/RSP0/CPU0:router(config-subif)# l2transport
RP/0/RSP0/CPU0:router(config-if-l2)# commit

RP/0/RSP0/CPU0:router# configure
RP/0/RSP0/CPU0:router(config)# interface gig0/2/0/15
RP/0/RSP0/CPU0:router(config-subif)# l2transport
RP/0/RSP0/CPU0:router(config-if-l2)# commit

RP/0/RSP0/CPU0:router# configure
RP/0/RSP0/CPU0:router(config)# interface gig0/2/0/19
RP/0/RSP0/CPU0:router(config-subif)# l2transport
RP/0/RSP0/CPU0:router(config-subif-l2)# monitor-session ms1
RP/0/RSP0/CPU0:router(config-if-l2)# commit

RP/0/RSP0/CPU0:router# configure
RP/0/RSP0/CPU0:router(config)# l2vpn
RP/0/RSP0/CPU0:router(config-l2vpn)# xconnect group xg1
RP/0/RSP0/CPU0:router(config-l2vpn-xc)# p2p xg1_p1
RP/0/RSP0/CPU0:router(config-l2vpn-xc-p2p)# interface gig0/2/0/11
RP/0/RSP0/CPU0:router(config-l2vpn-xc-p2p)# interface gig0/2/0/19
RP/0/RSP0/CPU0:router(config-if-l2)# commit
```

# Traffic Mirroring with EFPs (Remote): Example

This example shows a basic configuration for remote traffic mirroring with EFP interfaces. When traffic flows over the point-to-point cross connect between gig0/2/0/19.10 and gig0/2/0/11.10, packets received and transmitted on gig0/2/0/19.10 are also mirrored to gig0/2/0/10.1.

```
RP/0/RSP0/CPU0:router#monitor-session ms1
RP/0/RSP0/CPU0:router(config)# destination interface gig0/2/0/10.1

RP/0/RSP0/CPU0:router(config)# interface gig0/2/0/10.1 l2transport
RP/0/RSP0/CPU0:router(config-if-l2)# encapsulation dot1q 1
RP/0/RSP0/CPU0:router(config-if-l2)# rewrite ingress tag pop 1

RP/0/RSP0/CPU0:router(config)# interface gig0/2/0/11.10 l2transport
RP/0/RSP0/CPU0:router(config-if-l2)# encapsulation dot1q 10

RP/0/RSP0/CPU0:router(config)# interface gig0/2/0/19.10 l2transport
RP/0/RSP0/CPU0:router(config-if-l2)# encapsulation dot1q 10
RP/0/RSP0/CPU0:router(config-if-l2)# monitor-session ms1

RP/0/RSP0/CPU0:router(config)# l2vpn
RP/0/RSP0/CPU0:router(config-l2vpn)# xconnect group xg1
RP/0/RSP0/CPU0:router(config-l2vpn-xc)# p2p xg1_p1
RP/0/RSP0/CPU0:router(config-l2vpn-xc-p2p)# interface gig0/2/0/11.10
RP/0/RSP0/CPU0:router(config-l2vpn-xc-p2p)# interface gig0/2/0/19.10
```

# Viewing Monitor Session Status: Example

This example shows sample output of the **show monitor-session** command with the **status** keyword:

```
RP/0/RSP0/CPU0:router# show monitor-session status

Monitor-session cisco-rtp1
Destination interface GigabitEthernet0/5/0/38
================================================================================
Source Interface   Dir  Status
```

```
--------------------- ---- ----------------------------------------------------
Gi0/5/0/4       Both Operational
Gi0/5/0/17      Both Operational


RP/0/RSP0/CPU0:router# show monitor-session status detail

Monitor-session sess1
 Destination interface is not configured
 Source Interfaces
 -----------------
 GigabitEthernet0/0/0/0
  Direction: Both
  ACL match: Enabled
  Portion:  Full packet
  Status:  Not operational (destination interface not known).
 GigabitEthernet0/0/0/2
  Direction: Both
  ACL match: Disabled
  Portion:  First 100 bytes


RP/0/RSP0/CPU0:router# show monitor-session status error

Monitor-session ms1
Destination interface GigabitEthernet0/2/0/15 is not configured
================================================================================
Source Interface   Dir  Status
--------------------- ---- ----------------------------------------------------

Monitor-session ms2
Destination interface is not configured
================================================================================
Source Interface   Dir  Status
--------------------- ---- ----------------------------------------------------
```

# Monitor Session Statistics: Example

Use the **show monitor-session** command with the **counters** keyword to show the statistics/counters (received/transmitted/dropped) of different source ports. For each monitor session, this command displays a list of all source interfaces and the replicated packet statistics for that interface.

The full set of statistics displayed for each interface is:

- RX replicated packets and octets
- TX replicated packets and octets
- Non-replicated packet and octets

```
RP/0/RSP0/CPU0:router# show monitor-session counters

Monitor-session ms1
 GigabitEthernet0/2/0/19.10
  Rx replicated: 1000 packets, 68000 octets
  Tx replicated: 1000 packets, 68000 octets
  Non-replicated: 0 packets, 0 octets
```

Use the **clear monitor-session counters** command to clear any collected statistics. By default this command clears all stored statistics; however, an optional interface filter can be supplied.

```
RP/0/RSP0/CPU0:router# clear monitor-session counters
```

# Traffic Mirroring over Pseudowire: Example

This example shows how to configure traffic mirroring over a pseudowire:

```
RP/0/RSP0/CPU0:router# configure
RP/0/RSP0/CPU0:router(config)# interface GigabitEthernet0/11/0/1
RP/0/RSP0/CPU0:router(config-if)# l2transport
RP/0/RSP0/CPU0:router(config-if-l2)# monitor-session pw-span-test

RP/0/RSP0/CPU0:router(config)# monitor-session pw-span-test
RP/0/RSP0/CPU0:router(config-mon)# destination pseudowire

RP/0/RSP0/CPU0:router(config)# l2vpn
RP/0/RSP0/CPU0:router(config-l2vpn)# pw-class class1
RP/0/RSP0/CPU0:router(config-l2vpn-pwc)# encapsulation mpls

RP/0/RSP0/CPU0:router(config-l2vpn)# xconnect group g1
RP/0/RSP0/CPU0:router(config-l2vpn-xc)# p2p x1
RP/0/RSP0/CPU0:router(config-l2vpn-xc-p2p)# monitor-session pw-span-test
RP/0/RSP0/CPU0:router(config-l2vpn-xc-p2p)# neighbor 2.2.2.2 pw-id 1
RP/0/RSP0/CPU0:router(config-l2vpn-xc-p2p-pw)# pw-class class1

RP/0/RSP0/CPU0:router(config-l2vpn-xc-p2p-pw)# commit
```

# Layer 3 ACL-Based Traffic Mirroring: Example

This example shows how to configure Layer 3 ACL-based traffic mirroring:

```
RP/0/RSP0/CPU0:router# configure
RP/0/RSP0/CPU0:router(config)# monitor-session ms1
RP/0/RSP0/CPU0:router(config-mon)# destination
RP/0/RSP0/CPU0:router(config-mon)# commit

RP/0/RSP0/CPU0:router# configure
RP/0/RSP0/CPU0:router(config)# interface gig0/2/0/11
RP/0/RSP0/CPU0:router(config-if)# ipv4 access-group span ingress
RP/0/RSP0/CPU0:router(config-if)# monitor-session ms1
RP/0/RSP0/CPU0:router(config-if-mon)# commit

RP/0/RSP0/CPU0:router# configure
RP/0/RSP0/CPU0:router(config)# ipv4 access-list span
RP/0/RSP0/CPU0:router(config-ipv4-acl)# 5 permit ipv4 any any dscp 5 capture
RP/0/RSP0/CPU0:router(config-ipv4-acl)# 10 permit ipv4 any any
RP/0/RSP0/CPU0:router(config-ipv4-acl)# commit
```

# Layer 2 ACL-Based Traffic Mirroring: Example

This example shows how to configure Layer 2 ACL-based traffic mirroring:

```
RP/0/RSP0/CPU0:router# configure
```

```
RP/0/RSP0/CPU0:router(config)# monitor-session ms1
RP/0/RSP0/CPU0:router(config-mon)# destination interface gig0/2/0/15
RP/0/RSP0/CPU0:router(config-mon)# commit

RP/0/RSP0/CPU0:router# configure
RP/0/RSP0/CPU0:router(config)# interface gig0/2/0/11
RP/0/RSP0/CPU0:router(config-if)# l2transport
RP/0/RSP0/CPU0:router(config-if-l2)# exit
RP/0/RSP0/CPU0:router(config-if)# ethernet-services access-group acl_mirror ingress
RP/0/RSP0/CPU0:router(config-if)# acl
RP/0/RSP0/CPU0:router(config-if)# monitor-session ms1
RP/0/RSP0/CPU0:router(config-if-mon)# commit

RP/0/RSP0/CPU0:router# configure
RP/0/RSP0/CPU0:router(config)# ipv4 access-list acl_mirror
RP/0/RSP0/CPU0:router(config-ipv4-acl)# 5 permit ipv4 any any dscp 5 capture
RP/0/RSP0/CPU0:router(config-ipv4-acl)# 10 permit ipv4 any any
RP/0/RSP0/CPU0:router(config-ipv4-acl)# commit
```

# Partial Packet Mirroring: Example

This example shows how to configure mirroring of the first 100 bytes of the packet:

```
RP/0/RP0/CPU0:router(config)# interface gigabitethernet0/0/0/11
RP/0/RP0/CPU0:router(config-if-l2)# monitor-session mon1
RP/0/RSP0/CPU0:router(config-if-mon)# mirror first 100
```

# Sampled Traffic Mirroring: Example

This example shows how to configure Sampled Traffic Mirroring:

**Destination Port**

```
RP/0/RSP0/CPU0:router# configure
RP/0/RSP0/CPU0:(config)# interface TenGigE 0/3/1/3
RP/0/RSP0/CPU0:(config-if)# l2transport
RP/0/RSP0/CPU0:(config-if-l2)# commit
RP/0/RSP0/CPU0:(config)# monitor-session sampled-span1
RP/0/RSP0/CPU0:(config-mon)# destination interface TenGigE 0/3/1/3
RP/0/RSP0/CPU0:(config-mon)# commit
```

**Source Port**

```
RP/0/RSP0/CPU0:(config)# interface TenGigE 0/3/0/0
RP/0/RSP0/CPU0:(config-if)# l2transport
RP/0/RSP0/CPU0:(config-if-l2)# monitor-session sampled-span1 direction rx-only port-level
RP/0/RSP0/CPU0:(config-if-mon)# mirror interval 512
RP/0/RSP0/CPU0:(config-if-mon)# commit
```

In order to display the session status with the Sampled SPAN information, use the **show monitor-session status detail** command.

```
RP/0/RSP0/CPU0 # show monitor-session status detail

Monitor-session sampled-span1
 Destination interface TenGigE0/3/1/3
```

```
 Source Interfaces
 -----------------
 TenGigE0/3/0/0
  Direction: Rx-only
  Port level: True
  ACL match: Disabled
  Portion:  Full packet
  Interval:  512
  Status:   Operational
```

In order to display the session statistics, use the **show monitor-session counters** command.

```
RP/0/RSP0/CPU0:router# show monitor-session counters

Monitor-session sampled-span1
 TenGigE0/3/0/0
  Rx replicated: 1952 packets, 390400 octets
  Tx replicated: 0 packets, 0 octets
  Non-replicated: 0 packets, 0 octets
```

# Troubleshooting Traffic Mirroring

When you encounter any issue with traffic mirroring, begin troubleshooting by checking the output of the **show monitor-session status** command. This command displays the recorded state of all sessions and source interfaces:

```
Monitor-session sess1
<Session status>
================================================================================
Source Interface   Dir  Status
-------------------- ---- ----------------------------------------------------
Gi0/0/0/0       Both <Source interface status>
Gi0/0/0/2       Both <Source interface status>
```

In the preceding example, the line marked as `<Session status>` can indicate one of these configuration errors:

| Session Status | Explanation |
|---|---|
| Session is not configured globally | The session does not exist in global configuration. Check **show run** command output to ensure that a session with a correct name has been configured. |
| Destination interface <intf> is not configured | The interface that has been configured as the destination does not exist. For example, the destination interface may be configured to be a VLAN subinterface, but the VLAN subinterface may not have been yet created. |
| Destination interface <intf> (<down-state>) | The destination interface is not in Up state in the Interface Manager. You can verify the state using the **show interfaces** command. Check the configuration to see what might be keeping the interface from coming up (for example, a sub-interface needs to have an appropriate encapsulation configured). |

| Session Status | Explanation |
|---|---|
| Destination pseudowire is not configured | The L2VPN configuration that is to set up the pseudowire is missing. Configure the traffic mirroring session name as one segment of the xconnect p2p. |
| Destination pseudowire <name> (down) | The pseudowire is configured, but is down. Check the L2VPN configuration to identify why the pseudowire is not coming up. |

The <Source interface status> can report these messages:

| Source Interface Status | Explanation |
|---|---|
| Operational | Everything appears to be working correctly in traffic mirroring PI. Please follow up with the platform teams in the first instance, if mirroring is not operating as expected. |
| Not operational (Session is not configured globally) | The session does not exist in global configuration. Check the **show run** command output to ensure that a session with the right name has been configured. |
| Not operational (destination interface not known) | The session exists, but it either does not have a destination interface specified, or the destination interface named for the session does not exist (for example, if the destination is a sub-interface that has not been created). |
| Not operational (source same as destination) | The session exists, but the destination and source are the same interface, so traffic mirroring does not work. |
| Not operational (destination not active) | The destination interface or pseudowire is not in the Up state. See the corresponding *Session status* error messages for suggested resolution. |
| Not operational (source state <down-state>) | The source interface is not in the Up state. You can verify the state using the **show interfaces** command. Check the configuration to see what might be keeping the interface from coming up (for example, a sub-interface needs to have an appropriate encapsulation configured). |
| Error: see detailed output for explanation | Traffic mirroring has encountered an error. Run the **show monitor-session status detail** command to display more information. |

The **show monitor-session status detail** command displays full details of the configuration parameters, and of any errors encountered. For example:

RP/0/RSP0**show monitor-session status detail**

```
Monitor-session sess1
 Destination interface is not configured
```

```
 Source Interfaces
 -----------------
 GigabitEthernet0/0/0/0
  Direction: Both
  ACL match: Enabled
  Portion:  Full packet
  Status:  Not operational (destination interface not known)
 GigabitEthernet0/0/0/2
  Direction: Both
  ACL match: Disabled
  Portion:  First 100 bytes
  Status: Not operational (destination interface not known). Error: 'Viking SPAN PD' detected
 the 'warning' condition 'PRM connection creation failure'.
Monitor-session foo
 Destination next-hop GigabitEthernet 0/0/0/0
 Source Interfaces
 -----------------
 GigabitEthernet 0/1/0/0.100:
  Direction: Both
  Status:  Operating
 GigabitEthernet 0/2/0/0.200:
  Direction: Tx
  Status:  Error: <blah>

Monitor session bar
 No destination configured
 Source Interfaces
 -----------------
 GigabitEthernet 0/3/0/0.100:
  Direction: Rx
  Status:  Not operational(no destination)
```

Here are additional trace and debug commands:

```
RP/0/RSP0/CPU0:router# show monitor-session platform trace ?

 all   Turn on all the trace
 errors Display errors
 events Display interesting events

RP/0/RSP0/CPU0:router# show monitor-session trace ?

 process Filter debug by process

RP/0/RSP0/CPU0:router# debug monitor-session platform ?

 all   Turn on all the debugs
 errors VKG SPAN EA errors
 event  VKG SPAN EA event
 info  VKG SPAN EA info

RP/0/RSP0/CPU0:router# debug monitor-session platform all

RP/0/RSP0/CPU0:router# debug monitor-session platform event

RP/0/RSP0/CPU0:router# debug monitor-session platform info

RP/0/RSP0/CPU0:router# show monitor-session status ?

 detail  Display detailed output
 errors  Display only attachments which have errors
 internal Display internal monitor-session information
 |     Output Modifiers
```

```
RP/0/RSP0/CPU0:router# show monitor-session status

RP/0/RSP0/CPU0:router# show monitor-session status errors
```

### Where to Go Next

When you have configured an Ethernet interface, you can configure individual VLAN subinterfaces on that Ethernet interface.

For information about modifying Ethernet management interfaces for the shelf controller (SC), route processor (RP), and distributed RP, see the Advanced Configuration and Modification of the Management Ethernet Interface on the Cisco ASR 9000 Series Router module later in this document.

For information about IPv6 see the Implementing Access Lists and Prefix Lists on

Cisco IOS XR Software module in the Cisco IOS XR IP Addresses and Services Configuration Guide.

CHAPTER 10

# Configuring Virtual Loopback and Null Interfaces

This module describes the configuration of loopback and null interfaces. Loopback and null interfaces are considered virtual interfaces.

A virtual interface represents a logical packet switching entity within the router. Virtual interfaces have a global scope and do not have an associated location. Virtual interfaces have instead a globally unique numerical ID after their names. Examples are Loopback 0, Loopback 1, and Loopback 99999. The ID is unique per virtual interface type to make the entire name string unique such that you can have both Loopback 0 and Null 0.

Loopback and null interfaces have their control plane presence on the active route switch processor (RSP). The configuration and control plane are mirrored onto the standby RSP and, in the event of a failover, the virtual interfaces move to the ex-standby, which then becomes the newly active RSP.

**Feature History for Configuring Loopback and Null Interfaces on Cisco IOS XR Software**

| Release | Modification |
|---|---|
| Release 3.7.2 | This feature was introduced. |


- Prerequisites for Configuring Virtual Interfaces, on page 383
- Information About Configuring Virtual Interfaces, on page 383
- How to Configure Virtual Interfaces, on page 385
- Configuration Examples for Virtual Interfaces, on page 389


## Prerequisites for Configuring Virtual Interfaces

You must be in a user group associated with a task group that includes the proper task IDs. The command reference guides include the task IDs required for each command. If you suspect user group assignment is preventing you from using a command, contact your AAA administrator for assistance.

## Information About Configuring Virtual Interfaces

To configure virtual interfaces, you must understand the following concepts:

# Virtual Loopback Interface Overview

A virtual loopback interface is a virtual interface with a single endpoint that is always up. Any packet transmitted over a virtual loopback interface is immediately received by the selfsame interface. Loopback interfaces emulate a physical interface.

In Cisco IOS XR software virtual loopback interfaces perform the following functions:

- Loopback interfaces can act as a termination address for routing protocol sessions. This allows routing protocol sessions to stay up even if the outbound interface is down.
- You can ping the loopback interface to verify that the router IP stack is working properly.

In applications where other routers or access servers attempt to reach a virtual loopback interface, you must configure a routing protocol to distribute the subnet assigned to the loopback address.

Packets routed to the loopback interface are rerouted back to the router or access server and processed locally. IP packets routed out the loopback interface but not destined to the loopback interface are dropped. Under these two conditions, the loopback interface can behave like a null interface.

# Null Interface Overview

A null interface functions similarly to the null devices available on most operating systems. This interface is always up and can never forward or receive traffic; encapsulation always fails. The null interface provides an alternative method of filtering traffic. You can avoid the overhead involved with using access lists by directing undesired network traffic to the null interface.

The only interface configuration command that you can specify for the null interface is the **ipv4 unreachables** command. With the **ipv4 unreachables** command, if the software receives a nonbroadcast packet destined for itself that uses a protocol it does not recognize, it sends an Internet Control Message Protocol (ICMP) protocol unreachable message to the source. If the software receives a datagram that it cannot deliver to its ultimate destination because it knows of no route to the destination address, it replies to the originator of that datagram with an ICMP host unreachable message.

The Null 0 interface is created by default on the RSP during boot and cannot be removed. The **ipv4 unreachables** command can be configured for this interface, but most configuration is unnecessary because this interface just discards all the packets sent to it.

The Null 0 interface can be displayed with the **show interfaces null0** command.

# Virtual Management Interface Overview

Configuring an IPv4 virtual address enables you to access the router from a single virtual address with a management network without prior knowledge of which RSP is active. An IPv4 virtual address persists across route switch processor (RSP) failover situations. For this to happen, the virtual IPv4 address must share a common IPv4 subnet with a management Ethernet interface on both RPs.

On a Cisco ASR 9000 Series Router  where each RSP has multiple management Ethernet interfaces, the virtual IPv4 address maps to the management Ethernet interface on the active RSP that shares the same IP subnet.

## Active and Standby RPs and Virtual Interface Configuration

The standby RSP is available and in a state in which it can take over the work from the active RSP should that prove necessary. Conditions that necessitate the standby RSP to become the active RSP and assume the active RSP's duties include:

- Failure detection by a watchdog
- Administrative command to take over
- Removal of the active RSP from the chassis

If a second RSP is not present in the chassis while the first is in operation, a second RSP may be inserted and automatically becomes the standby RSP. The standby RSP may also be removed from the chassis with no effect on the system other than loss of RSP redundancy.

After failover, the virtual interfaces all are present on the standby (now active) RSP. Their state and configuration are unchanged and there has been no loss of forwarding (in the case of tunnels) over the interfaces during the failover. The routers use nonstop forwarding (NSF) over bundles and tunnels through the failover of the host RSP.

**Note** The user need not configure anything to guarantee that the standby interface configurations are maintained.

Protocol configuration such as tacacs source-interface, snmp-server trap-source, ntp source, logging source-interface do not use the virtual management IP address as their source by default. Use the **ipv4 virtual address use-as-src-addr** command to ensure that the protocol uses the virtual IPv4 address as its source address. Alternatively, you can also configure a loopback address with the designated or desired IPv4 address and set that as the source for protocols such as TACACS+ using the **tacacs source-interface** command.

# How to Configure Virtual Interfaces

This section contains the following procedures:

## Configuring Virtual Loopback Interfaces

This task explains how to configure a basic loopback interface.

**Restrictions**

The IP address of a loopback interface must be unique across all routers on the network. It must not be used by another interface on the router, and it must not be used by an interface on any other router on the network.

### SUMMARY STEPS

1. **configure**
2. **interface loopback** *instance*
3. **ipv4 address** *ip-address*
4. **end** or **commit**
5. **show interfaces** *type instance*

## DETAILED STEPS

| | Command or Action | Purpose |
|---|---|---|
| **Step 1** | **configure**<br>**Example:**<br>`RP/0/RSP0/CPU0:router# configure` | Enters global configuration mode. |
| **Step 2** | **interface loopback** *instance*<br>**Example:**<br>`RP/0/RSP0/CPU0:router#(config)# interface Loopback 3` | Enters interface configuration mode and names the new loopback interface. |
| **Step 3** | **ipv4 address** *ip-address*<br>**Example:**<br>`RP/0/RSP0/CPU0:router(config-if)# ipv4 address 172.18.189.38/32` | Assigns an IP address and subnet mask to the virtual loopback interface using the **ipv4 address** configuration command. |
| **Step 4** | **end** or **commit**<br>**Example:**<br>`RP/0/RSP0/CPU0:router(config-if)# end`<br>or<br>`RP/0/RSP0/CPU0:router(config-if)# commit` | Saves configuration changes.<br>• When you issue the **end** command, the system prompts you to commit changes:<br>`Uncommitted changes found, commit them before exiting(yes/no/cancel)? [cancel]:`<br>• Entering **yes** saves configuration changes to the running configuration file, exits the configuration session, and returns the router to EXEC mode.<br>• Entering **no** exits the configuration session and returns the router to EXEC mode without committing the configuration changes.<br>• Entering **cancel** leaves the router in the current configuration session without exiting or committing the configuration changes.<br>• Use the **commit** command to save the configuration changes to the running configuration file and remain within the configuration session. |
| **Step 5** | **show interfaces** *type instance*<br>**Example:**<br>`RP/0/RSP0/CPU0:router# show interfaces Loopback 3` | (Optional) Displays the configuration of the loopback interface. |

# Configuring Null Interfaces

This task explains how to configure a basic null interface.

## SUMMARY STEPS

1. **configure**
2. **interface null 0**
3. **end** or **commit**
4. **show interfaces null 0**

## DETAILED STEPS

| | Command or Action | Purpose |
|---|---|---|
| **Step 1** | **configure**<br>**Example:**<br>`RP/0/RSP0/CPU0:router# configure` | Enters global configuration mode. |
| **Step 2** | **interface null 0**<br>**Example:**<br>`RP/0/RSP0/CPU0:router#(config)# interface null 0` | Enters the null 0 interface configuration mode. |
| **Step 3** | **end** or **commit**<br>**Example:**<br>`RP/0/RSP0/CPU0:router(config-null0)# end`<br>or<br>`RP/0/RSP0/CPU0:router(config-null0)# commit` | Saves configuration changes.<br>• When you issue the **end** command, the system prompts you to commit changes:<br>`Uncommitted changes found, commit them before exiting(yes/no/cancel)? [cancel]:`<br>• Entering **yes** saves configuration changes to the running configuration file, exits the configuration session, and returns the router to EXEC mode.<br>• Entering **no** exits the configuration session and returns the router to EXEC mode without committing the configuration changes.<br>• Entering **cancel** leaves the router in the current configuration session without exiting or committing the configuration changes.<br>• Use the **commit** command to save the configuration changes to the running configuration file and remain within the configuration session. |
| **Step 4** | **show interfaces null 0**<br>**Example:** | Verifies the configuration of the null interface. |

| | Command or Action | Purpose |
|---|---|---|
| | `RP/0/RSP0/CPU0:router# show interfaces null 0` | |

# Configuring Virtual IPv4 Interfaces

This task explains how to configure an IPv4 virtual interface.

### SUMMARY STEPS

1. **configure**
2. **ipv4 address virtual address** *ipv4-*
3. **end** or **commit**

### DETAILED STEPS

| | Command or Action | Purpose |
|---|---|---|
| **Step 1** | **configure**<br>**Example:**<br>`RP/0/RSP0/CPU0:router# configure` | Enters global configuration mode. |
| **Step 2** | **ipv4 address virtual address** *ipv4-*<br>**Example:**<br>`RP/0/RSP0/CPU0:router(config)# ipv4 virtual address 10.3.32.154/8` | Defines an IPv4 virtual address for the management Ethernet interface. |
| **Step 3** | **end** or **commit**<br>**Example:**<br>`RP/0/RSP0/CPU0:router(config-null0)# end`<br>or<br>`RP/0/RSP0/CPU0:router(config-null0)# commit` | Saves configuration changes.<br>• When you issue the **end** command, the system prompts you to commit changes:<br>`Uncommitted changes found, commit them before exiting(yes/no/cancel)? [cancel]:`<br>• Entering **yes** saves configuration changes to the running configuration file, exits the configuration session, and returns the router to EXEC mode.<br>• Entering **no** exits the configuration session and returns the router to EXEC mode without committing the configuration changes.<br>• Entering **cancel** leaves the router in the current configuration session without exiting or committing the configuration changes. |

| | Command or Action | Purpose |
|---|---|---|
| | | • Use the **commit** command to save the configuration changes to the running configuration file and remain within the configuration session. |

# Configuration Examples for Virtual Interfaces

This section provides the following configuration examples:

## Configuring a Loopback Interface: Example

The following example indicates how to configure a loopback interface:

```
RP/0/RSP0/CPU0:router# configure
RP/0/RSP0/CPU0:router(config)# interface Loopback 3
RP/0/RSP0/CPU0:router(config-if)# ipv4 address 172.18.189.38/32
RP/0/RSP0/CPU0:router(config-if)# end
Uncommitted changes found, commit them? [yes]: yes
RP/0/RSP0/CPU0:router# show interfaces Loopback 3

Loopback3 is up, line protocol is up
 Hardware is Loopback interface(s)
 Internet address is 172.18.189.38/32
 MTU 1514 bytes, BW Unknown
   reliability 0/255, txload Unknown, rxload Unknown
 Encapsulation Loopback, loopback not set
 Last clearing of "show interface" counters never
 5 minute input rate 0 bits/sec, 0 packets/sec
 5 minute output rate 0 bits/sec, 0 packets/sec
   0 packets input, 0 bytes, 0 total input drops
   0 drops for unrecognized upper-level protocol
   Received 0 broadcast packets, 0 multicast packets
   0 packets output, 0 bytes, 0 total output drops
   Output 0 broadcast packets, 0 multicast packets
```

## Configuring a Null Interface: Example

The following example indicates how to configure a null interface:

```
RP/0/RSP0/CPU0:router# configure
RP/0/RSP0/CPU0:router(config)# interface Null 0
RP/0/RSP0/CPU0:router(config-null0)# ipv4 unreachables
RP/0/RSP0/CPU0:router(config-null0)# end
Uncommitted changes found, commit them? [yes]: yes
RP/0/RSP0/CPU0:router# show interfaces Null 0

Null0 is up, line protocol is up
 Hardware is Null interface
 Internet address is Unknown
 MTU 1500 bytes, BW Unknown
   reliability 0/255, txload Unknown, rxload Unknown
 Encapsulation Null, loopback not set
 Last clearing of "show interface" counters never
```

```
 5 minute input rate 0 bits/sec, 0 packets/sec
 5 minute output rate 0 bits/sec, 0 packets/sec
   0 packets input, 0 bytes, 0 total input drops
   0 drops for unrecognized upper-level protocol
   Received 0 broadcast packets, 0 multicast packets
   0 packets output, 0 bytes, 0 total output drops
   Output 0 broadcast packets, 0 multicast packets
```

# Configuring a Virtual IPv4 Interface: Example

```
RP/0/RSP0/CPU0:router# configure
RP/0/RSP0/CPU0:router(config)# ipv4 virtual address 10.3.32.154/8
RP/0/RSP0/CPU0:router(config-null0)# commit
```

CHAPTER 11

# Configuring Channelized SONET/SDH

This module describes the configuration of Channelized SONET/SDH.

### Feature History for Configuring Channelized SONET/SDH

| Release | Modification |
|---|---|
| Release 3.9.0 | Support for the following SPA was introduced on the Cisco ASR 9000 Series Router:<br>• Cisco 2-Port Channelized OC-12/DS0 SPA |
| Release 4.0.0 | Support for the following SPA was introduced on the Cisco ASR 9000 Series Router:<br>• Cisco 1-Port Channelized OC-48/STM-16 SPA<br><br>Support for SDH, E3, E1, and POS channelization was added for the Cisco 2-Port Channelized OC-12/DS0 and Cisco 1-Port Channelized OC-48/STM-16 SPAs. |
| Release 4.0.1 | Support for the following SPA was introduced on the Cisco ASR 9000 Series Router:<br>• Cisco 1-Port Channelized OC-3/STM-1 SPA |


- Configuring Channelized SONET/SDH, on page 391
- Prerequisites for Configuring Channelized SONET/SDH, on page 392
- Information About Configuring Channelized SONET/SDH, on page 392
- How to Configure Channelized SONET/SDH, on page 403
- Configuration Examples for Channelized SONET, on page 431


# Configuring Channelized SONET/SDH

This module describes the configuration of Channelized SONET/SDH.

**Feature History for Configuring Channelized SONET/SDH**

| Release | Modification |
|---|---|
| Release 3.9.0 | Support for the following SPA was introduced on the Cisco ASR 9000 Series Router:<br>• Cisco 2-Port Channelized OC-12/DS0 SPA |
| Release 4.0.0 | Support for the following SPA was introduced on the Cisco ASR 9000 Series Router:<br>• Cisco 1-Port Channelized OC-48/STM-16 SPA<br><br>Support for SDH, E3, E1, and POS channelization was added for the Cisco 2-Port Channelized OC-12/DS0 and Cisco 1-Port Channelized OC-48/STM-16 SPAs. |
| Release 4.0.1 | Support for the following SPA was introduced on the Cisco ASR 9000 Series Router:<br>• Cisco 1-Port Channelized OC-3/STM-1 SPA |

# Prerequisites for Configuring Channelized SONET/SDH

You must be in a user group associated with a task group that includes the proper task IDs. The command reference guides include the task IDs required for each command. If you suspect user group assignment is preventing you from using a command, contact your AAA administrator for assistance.

Before configuring Channelized SONET/SDH, be sure that the following tasks and conditions are met:

- You have at least one of the following SPAs installed in your chassis:
  - Cisco 1-Port Channelized OC-3/STM-1 SPA
  - Cisco 2-Port Channelized OC-12c/DS0 SPA
  - Cisco 1-Port Channelized OC-48/STM-16 SPA
- You should know how to apply and specify the SONET controller name and *interface-path-id* with the generalized notation *rack/slot/module/port*. The SONET controller name and *interface-path-id* are required with the **controller sonet** command.

# Information About Configuring Channelized SONET/SDH

To configure Channelized SONET/SDH, you must understand these concepts:

# Channelized SONET Overview

Synchronous Optical Network (SONET) is an American National Standards Institute (ANSI) specification format used in transporting digital telecommunications services over optical fiber.

Synchronous Digital Hierarchy (SDH) is the international equivalent of SONET.

Channelized SONET provides the ability to transport SONET frames across multiplexed T3/E3 and virtual tributary group (VTG) channels.

Channelized SONET is supported on the following SPAs:

- Cisco 1-Port Channelized OC-48/STM-16 SPA
- Cisco 1-Port Channelized OC-3/STM-1 SPA
- Cisco 2-Port Channelized OC-12c/DS0 SPA

Channelized SDH is supported on the following SPAs:

- Cisco 1-Port Channelized OC-48/STM-16 SPA
- Cisco 1-Port Channelized OC-3/STM-1 SPA
- Cisco 2-Port Channelized OC-12c/DS0 SPA

SONET uses Synchronous Transport Signal (STS) framing. An STS is the electrical equivalent to an optical carrier 1 (OC-1).

SDH uses Synchronous Transport Mode (STM) framing. An STM-1 is the electrical equivalent to 3 optical carrier 1s (OC-1s).

A channelized SONET interface is a composite of STS streams, which are maintained as independent frames with unique payload pointers. The frames are multiplexed before transmission.

When a line is channelized, it is logically divided into smaller bandwidth channels called *paths*. These paths carry the SONET payload. The sum of the bandwidth on all paths cannot exceed the line bandwidth.

When a line is not channelized, it is called *clear channel*, and the full bandwidth of the line is dedicated to a single channel that carries broadband services.

An STS stream can be channelized into the following types of channels:

- T3/E3
- VT1.5 mapped T1
- Packet over SONET/SDH (POS) (OC12 and OC48 only)

The T3/E3 channels can be channelized further into T1s, and the T1s can be channelized into time slots (DS0s), except on the 1-Port Channelized OC-48/STM-16 SPA, which does not support T1 or DS0s.

Channelizing a SONET line consists of two primary processes:

- Configuring the controller
- Configuring the interface into channelized paths

You configure the controller first by setting the mode of the STS path. The mode can be set to T3, or VT1.5-mapped T1, or POS, depending on your hardware support.

**Note** POS is supported only on the STS-3c and STS-12c paths on the Cisco 1-Port Channelized OC-12/DS0 SPA and on the STS-3c, STS-12c, and STS-48c paths on the Cisco 1-Port Channelized OC-48/STM-16 SPA.

When the mode is specified, the respective controller is created, and the remainder of the configuration is applied on that controller. For example, mode T3 creates a T3 controller. The T3 controller can then be configured to a serial channel, or it can be further channelized to carry T1s, and those T1s can be configured to serial interfaces.

Depending on the support for your installed SPA, each STS path can be independently configured into T3s, E3s, or VTGs, and so on.

This figure shows an example of three STS paths for a SONET controller. However, the 2-Port Channelized OC-12/DS0 SPA supports up to 12 STS paths, and the 1-Port Channelized OC-48/STM-16 SPA supports up to 48 STS paths, but the 1-Port Channelized OC-48/STM-16 SPA does not support VTGs.

*Figure 34: SONET Controller STS Paths*

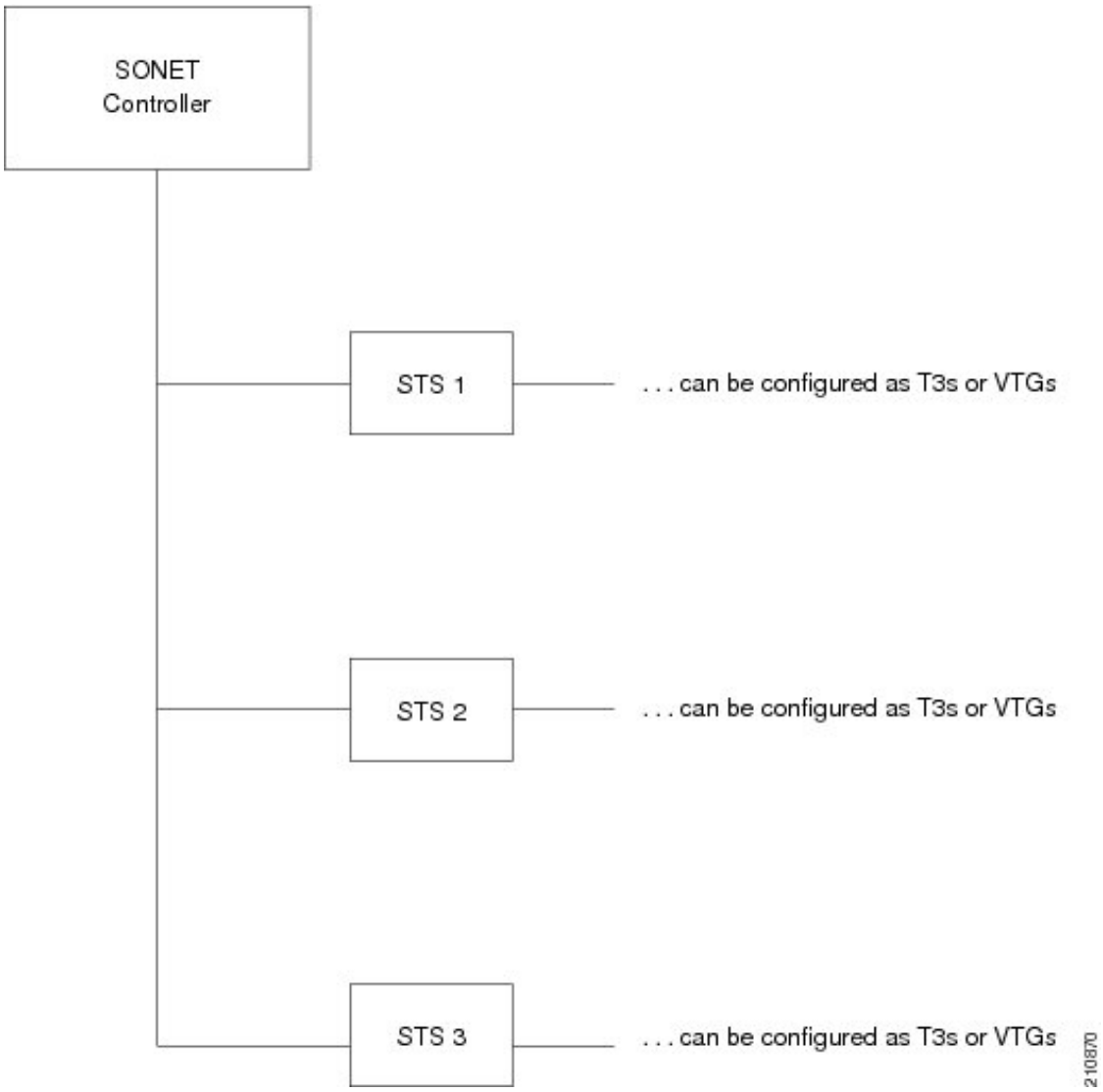


This figure shows an example of some SONET controller configuration combinations.

**Note** The 1-Port Channelized OC-48/STM-16 SPA on the Cisco ASR 9000 Series Router does not support VTGs.

***Figure 35: SONET Controller Configuration Combinations***

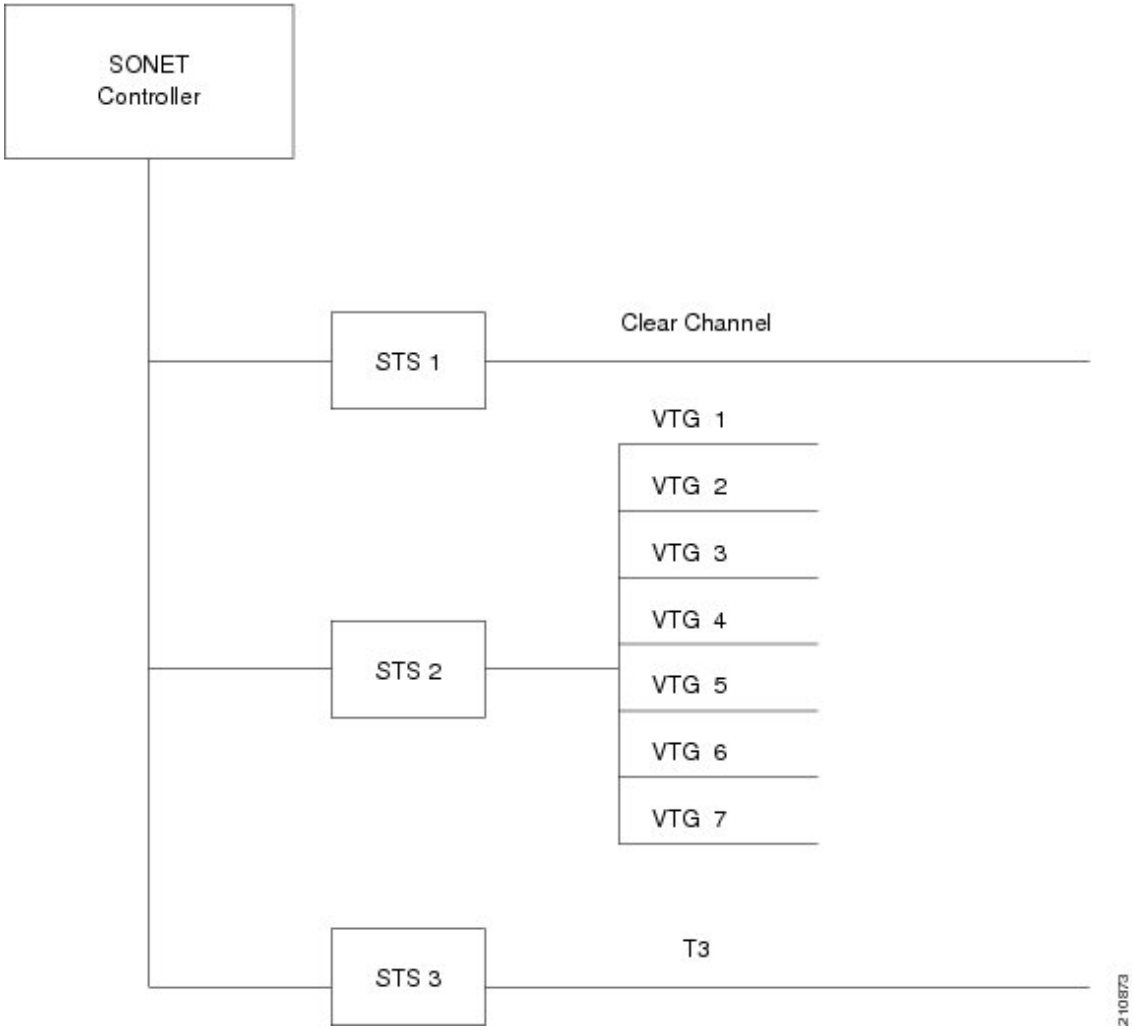


This figure shows the T3 paths that can be configured.

**Note** Channelized T3 paths are only supported on the 1-Port Channelized OC-3/STM-1 SPA and 2-Port Channelized OC-12c/DS0 SPA.

***Figure 36: SONET T3 Channelized Paths***

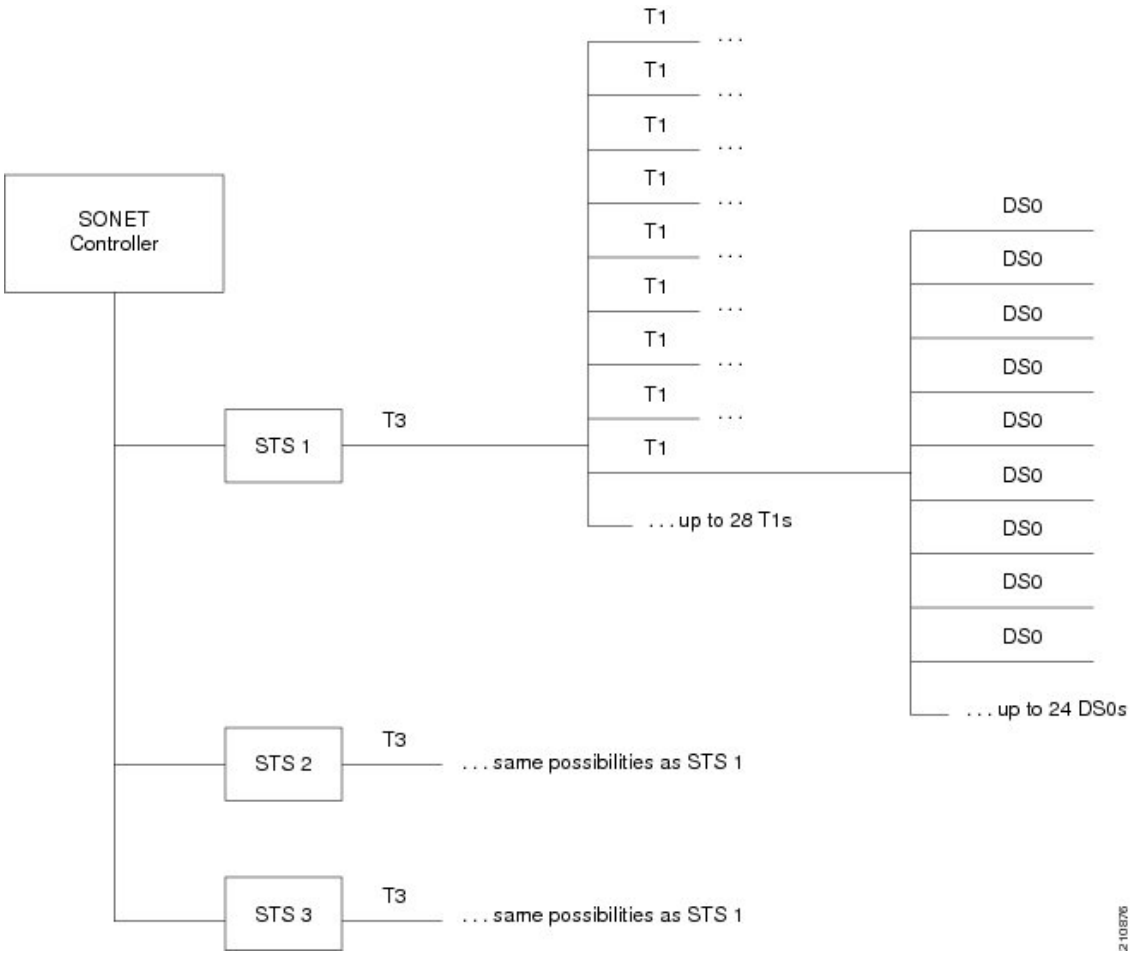


This figure shows the VTG paths that can be configured.

**Note** VTG paths are only supported on the Cisco 1-Port Channelized OC-3/STM-1 SPA and Cisco 2-Port Channelized OC-12c/DS0 SPA on the Cisco ASR 9000 Series Router.

***Figure 37: SONET VTG Channelized Paths***

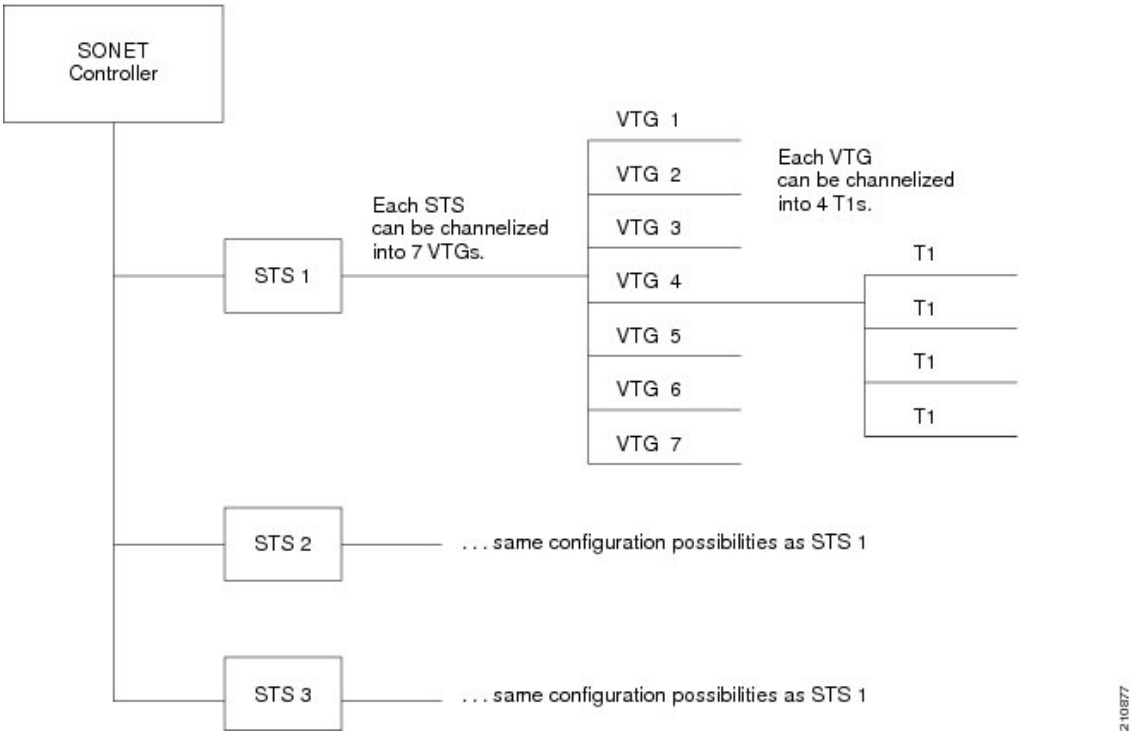


# Channelized SDH Overview

Synchronous Digital Hierarchy (SDH) is the international equivalent of SONET.

Channelized SDH is supported on the following SPAs:

- Cisco 1-Port Channelized OC-48/STM-16 SPA
- Cisco 1-Port Channelized OC-3/STM-1 SPA
- Cisco 2-Port Channelized OC-12/DS0 SPA

A Synchronous Transport Module (STM) signal is the Synchronous Digital Hierarchy (SDH) equivalent of the SONET STS, but the numbers are different for each bandwidth. In this guide, the STM term refers to both path widths and optical line rates. The paths within an STM signals are called administrative units (AUs).

A summary of the basic terminology differences between SONET and SDH is as follows:

- SONET STS is equivalent to SDH administrative unit (AU)
- SONET VT is equivalent to SDH tributary unit (TU)
- SDH basic building blocks are STM-1 (equivalent to STS-3) and STM-0 (equivalent to STS-1)

An administrative unit (AU) is the information structure that provides adaptation between the higher-order path layer and the multiplex section layer. It consists of an information payload (the higher-order virtual container) and an administrative unit pointer, which indicates the offset of the payload frame start relative to the multiplex section frame start.

An AU can be channelized into tributary units (TUs) and tributary unit groups (TUGs).

An administrative unit 4 (AU-4) consists of three STM-1s or an STM-3.

An administrative unit 3 (AU-3) consists of one STM-1.

An administrative unit group (AUG) consists of one or more administrative units occupying fixed, defined positions in an STM payload.

***Table 9: SONET and SDH Terminology Equivalencies***

| SONET Term | SDH Term |
|---|---|
| SONET | SDH |
| STS-3c | AU-4 |
| STS-1 | AU-3 |
| VT | TU |
| SPE | VC |
| Section | Regenerator Section |
| Line | Multiplex Section |
| Path | Path |

On the Cisco ASR 9000 Series Router, the following levels of SDH channelization are supported:

- 1-Port Channelized OC-3/STM-1 SPA
  - AU4 to TUG-3 to TUG-2 to VC-12 to E1 to NxDS0
  - AU4 to TUG-3 to VC-3 to DS3 (Clear Channel)
  - AU4 to TUG-3 to VC-3 to E3 (Clear Channel)
  - AU3 to TUG-2 to VC-11 to DS1 to NxDS0
- 2-Port Channelized OC-12/DS0 SPA
  - AU-4-4c (VC-4-4c)
  - AU-4 (VC-4)
  - AU-4 to TUG-3 to VC-3 to DS3
  - AU-4 to TUG-3 to VC-3 to E3
  - AU-4 to TUG-3 to TUG-2 to VC-11 to T1 to NxDS0
  - AU-4 to TUG-3 to TUG-2 to VC-12 to E1to NxDS0

    - AU-3 to VC-3 to DS3
    - AU-3 to TUG-2 to VC-11 to T1 to NxDS0
    - AU-3 to TUG-2 to VC-12 to E1to NxDS0
    - AU-3 to VC-3 to E3
    - AU-3 to VC-3 to DS3 to T1 to NxDS0
    - AU-3 to VC-3 to DS3 to E1 to NxDS0
- 1-Port Channelized OC-48/STM-16 SPA
    - DS3
    - E3
    - AU-3 (VC-3)
    - AU-4 (VC-4)
    - AU-4-4c (VC-4-4c)
    - AU-4-16c (VC-4-16c)

This figure shows an example of SDH AU-3 paths that can be configured on certain supported SPAs.

**Note** The 1-Port Channelized OC-48/STM-16 SPA does not support further channelization of AU-3 paths into T1s.

***Figure 38: SDH AU3 Paths***

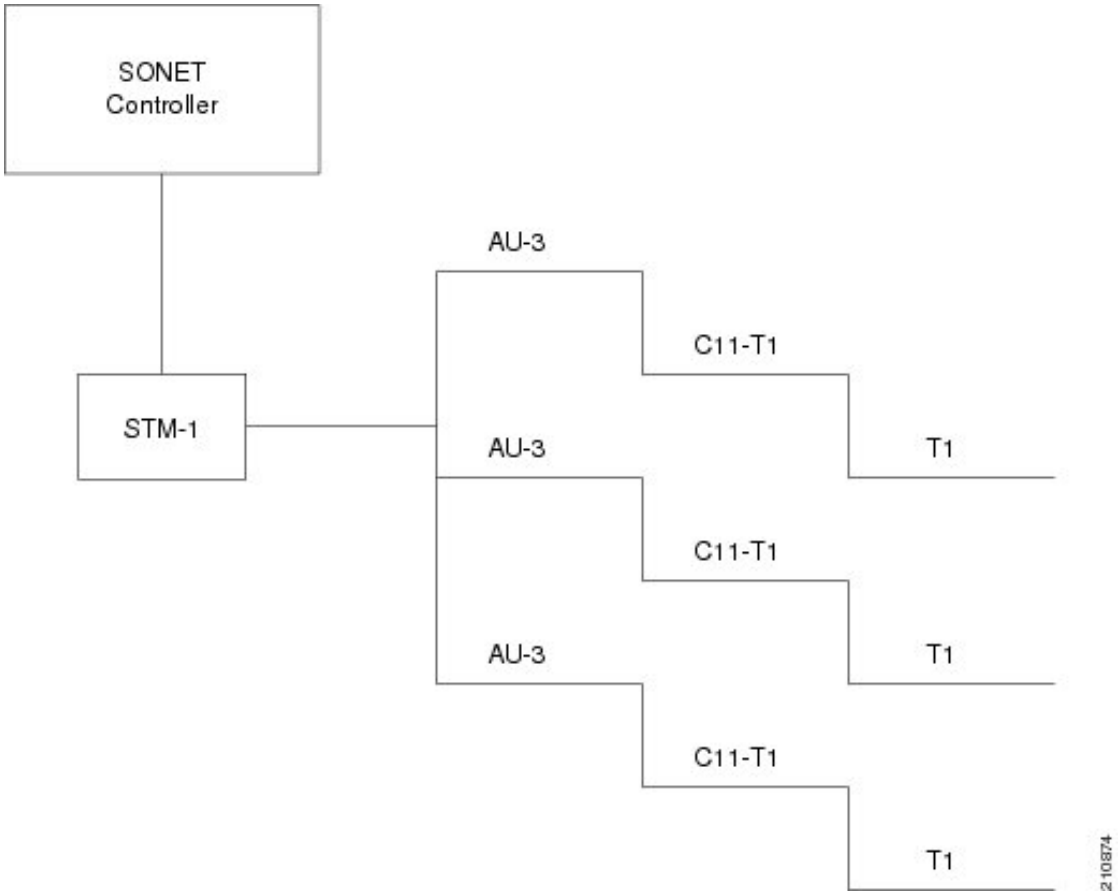


This figure shows the SDH AU4 paths that can be configured on supported SPAs.

**Note** The 1-Port Channelized OC-48/STM-16 SPA only supports channelization to the T3 or E3 level. Further channelization of AU-4 paths is not supported.

*Figure 39: SDH AU4 Paths*

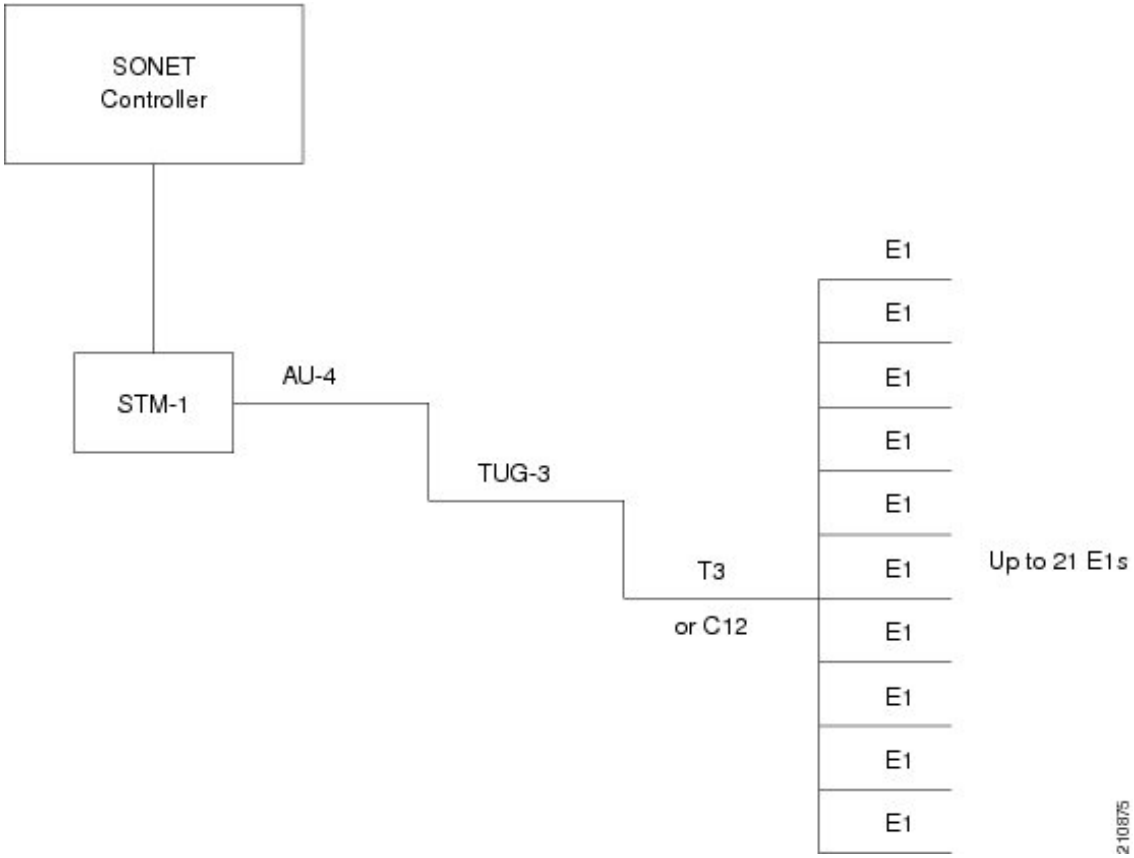


# Default Configuration Values for Channelized SONET/SDH

This table describes the default configuration parameters that are present on the Channelized SONET/SDH.

*Table 10: SONET/SDH Controller Default Cit onfiguration Values*

| Parameter | Default Value | Configuration File Entry |
|---|---|---|
| Clock source | line | **clock source** {**internal** \| **line**} |
| SONET framing | sonet | **framing** {**sdh** \| **sonet**} |

# How to Configure Channelized SONET/SDH

This section contains the following procedures:

## Configuring SONET T3 and VT1.5-Mapped T1 Channels

This task explains how to configure a SONET line into T3 and VT-mapped T1 Channels.

### Before you begin

- You should know how to configure the SONET controller as specified in the How to Configure Channelized SONET/SDH section of the *Configuring Clear Channel SONET Controllers* module.
- STS paths can be channelized into T3s on the following SPAs:
  - Cisco 1-Port Channelized OC-48/STM-16 SPA
  - Cisco 1-Port Channelized OC-3/STM-1 SPA
  - Cisco 2-Port Channelized OC-12/DS0 SPA
- STS paths can be channelized into VTG mapped T1s on the following SPA:
  - Cisco 1-Port Channelized OC-3/STM-1 SPA
  - Cisco 2-Port Channelized OC-12/DS0 SPA
- T3 paths can be channelized into T1s or E1s on the following SPA:
  - Cisco 1-Port Channelized OC-3/STM-1 SPA
  - Cisco 2-Port Channelized OC-12/DS0 SPA
- T1 paths can be channelized into NxDS0s on the Cisco 2-Port Channelized OC-12/DS0 SPA.

### Restrictions

T1s and E1s are not supported on the Cisco 1-Port Channelized OC-48/STM-16 SPA.

### SUMMARY STEPS

1. **configure**
2. **controller sonet** *interface-path-id*
3. **clock source** {**internal** | **line**}
4. **framing sonet**
5. **sts** *number*
6. **mode** *mode*
7. **width** *number*
8. **root**
9. **controller** *controllerName instance*
10. **mode** *mode*
11. **root**

12. **controller t1** *interface-path-id*
13. **channel-group** *number*
14. **timeslots** *num1:num2:num3:num4*
15. or
16. **timeslots** *range1-range2*
17. **show configuration**
18. **root**
19. **interface serial** *interface-path-id*
20. **encapsulation** {**frame-relay** | **hdlc** | **ppp**}
21. **ipv4** *ip-address mask*
22. **no shutdown**
23. **end** or **commit**
24. **show controllers sonet** *interface-path-id*

## DETAILED STEPS

| | Command or Action | Purpose |
|---|---|---|
| **Step 1** | **configure**<br>**Example:**<br>`RP/0/RSP0/CPU0:router# configure` | Enters global configuration mode. |
| **Step 2** | **controller sonet** *interface-path-id*<br>**Example:**<br>`RP/0/RSP0/CPU0:router(config)# controller sonet 0/1/1/0` | Enters SONET controller configuration submode and specifies the SONET controller name and *interface-path-id* with the *rack/slot/module/port* notation. |
| **Step 3** | **clock source** {**internal** \| **line**}<br>**Example:**<br>`RP/0/RSP0/CPU0:router(config-sonet)# clock source internal` | Configures the SONET port transmit clock source, where the **internal** keyword sets the internal clock and the **line** keyword sets the clock recovered from the line.<br>• Use the **line** keyword whenever clocking is derived from the network. Use the **internal** keyword when two routers are connected back to back or over fiber for which no clocking is available.<br>• **line** is the default keyword.<br>**Note** • Internal clocking is required for SRP interfaces. |
| **Step 4** | **framing sonet**<br>**Example:**<br>`RP/0/RSP0/CPU0:router(config-sonet)# framing sonet` | Configures the controller for SONET framing.<br>SONET framing (**sonet**) is the default. |

| | Command or Action | Purpose |
|---|---|---|
| **Step 5** | **sts** *number*<br>**Example:**<br>`RP/0/RSP0/CPU0:router(config-sonet)# sts 1` | Configures the STS stream specified by *number*. The ranges are:<br>• 1 to 48—1 Port Channelized OC-48/STM-16 SPA<br>• 1 to 3—1-Port Channelized OC-3/STM-1 SPA<br>• 1 to 12—2-Port Channelized OC-12/DS0 SPA |
| **Step 6** | **mode** *mode*<br>**Example:**<br>`RP/0/RSP0/CPU0:router(config-stsPath)# mode t3` | Sets the mode of interface at the STS level. The possible modes are:<br>• t3—SONET path carrying T3<br>• vt15-t1—SONET path carrying virtual tributary 1.5 T1s (VT15 T1) (1-Port Channelized OC-3/STM-1 SPA and 2-Port Channelized OC-12c/DS0 SPA only)<br>• pos—Packet over SONET |
| **Step 7** | **width** *number*<br>**Example:**<br>`RP/0/RSP0/CPU0:router(config-stsPath)# width 3` | Configures the number of the STS streams that are concatenated. The possible values for *number* are:<br>• 1—Indicating one STS stream<br>• 3—Indicating three STS streams (STS-3c)<br>• 12—Indicating concatenation of 12 STS streams (STS-12c)<br>• 48—Indicating concatenation of 48 STS streams (STS-48c). This is the default on the 1-Port Channelized OC-48/STM-16 SPA.<br><br>Widths 3, and 12, and 48 are configured on STS paths at natural boundaries, which coincide with the following path numbers:<br>• 1, 4, 7, 10, and so on, for STS-3c<br>• 1, 13, 25, and 37 for STS-12c<br>• 1 for STS-48c |
| **Step 8** | **root**<br>**Example:**<br>`RP/0/RSP0/CPU0:router(config-stsPath)# root` | Exits to global configuration mode. |
| **Step 9** | **controller** *controllerName instance*<br>**Example:** | Enters controller configuration submode and specifies the controller name and instance identifier with the *rack/slot/module/port/controllerName* notation. The controller names are: |

| | Command or Action | Purpose |
|---|---|---|
| | `RP/0/RSP0/CPU0:router(config)# controller t3 0/1/1/0/0` | • t3—SONET path carrying T3<br>• vt15-t1—SONET path carrying virtual tributary 1.5 T1s (VT15 T1) (1-Port Channelized OC-3/STM-1 SPA and 2-Port Channelized OC-12c/DS0 SPA only) |
| **Step 10** | **mode** *mode*<br>**Example:**<br>`RP/0/RSP0/CPU0:router(config-t3)# mode t1` | Sets the mode of interface at this level. The possible modes are:<br>• t1—Channelized into 28 T1s (1-Port Channelized OC-3/STM-1 SPA and 2-Port Channelized OC-12c/DS0 SPA only)<br>• e1—Channelized into 21 E1s (1-Port Channelized OC-3/STM-1 SPA and 2-Port Channelized OC-12c/DS0 SPA only)<br>• serial—Clear channel carrying an HDLC-like payload |
| **Step 11** | **root**<br>**Example:**<br>`RP/0/RSP0/CPU0:router(config-t3)# root` | Exits to global configuration mode. |
| **Step 12** | **controller t1** *interface-path-id*<br>**Example:**<br>`RP/0/RSP0/CPU0:router(config)# controller t1 0/1/1/0/0/0` | Enters T1 controller configuration submode and specifies the T1 controller name and *interface-path-id* with the *rack/slot/module/port/T3Num/T1num* notation.<br>(1-Port Channelized OC-3/STM-1 SPA and 2-Port Channelized OC-12c/DS0 SPA only) |
| **Step 13** | **channel-group** *number*<br>**Example:**<br>`RP/0/RSP0/CPU0:router(config-t1)# channel-group 1` | Sets the channel group number to which time slots are assigned. The range is from 1 to 24. |
| **Step 14** | **timeslots** *num1:num2:num3:num4* | |
| **Step 15** | or | |
| **Step 16** | **timeslots** *range1-range2*<br>**Example:**<br>`RP/0/0/CPU0:router(config-t1-channel_group)# timeslots 1:3:7:9`<br>`RP/0/0/CPU0:router(config-t1-channel_group)# timeslots 1-24` | Specifies the time slots for the interface by number with the *num1:num2:num3:num4* notation, or by range with the *range1-range2* notation. |
| **Step 17** | **show configuration**<br>**Example:** | Displays the contents of uncommitted configuration. |

| | Command or Action | Purpose |
|---|---|---|
| | `RP/0/RSP0/CPU0:router(config-t1-channel_group)# show configuration` | |
| **Step 18** | **root**<br>**Example:**<br>`RP/0/RSP0/CPU0:router(config-t3)# root` | Exits to global configuration mode. |
| **Step 19** | **interface serial** *interface-path-id*<br>**Example:**<br>`RP/0/RSP0/CPU0:router(config)# interface serial 0/1/1/0/0/0:0` | Specifies the complete interface number with the *rack/slot/module/port/T3Num/T1num:instance* notation. |
| **Step 20** | **encapsulation** {**frame-relay** \| **hdlc** \| **ppp**}<br>**Example:**<br>`RP/0/RSP0/CPU0:router(config-if)# encapsulation ppp` | Specifies the encapsulation type with the one of the following keywords:<br>• **frame-relay**—Frame Relay network protocol<br>• **hdlc**—High-level Data Link Control (HDLC) synchronous protocol<br>• **ppp**—Point-to-Point Protocol |
| **Step 21** | **ipv4** *ip-address mask*<br>**Example:**<br>`RP/0/RSP0/CPU0:router(config-if)# ip address 10.10.10.10 255.255.255.255` | Assigns an IP address and subnet mask to the interface. |
| **Step 22** | **no shutdown**<br>**Example:**<br>`RP/0/RSP0/CPU0:router(config-if)# no shutdown` | Removes the shutdown configuration.<br>**Note** • Removal of the shutdown configuration eliminates the forced administrative down on the interface, enabling it to move to an up or down state (assuming that the parent SONET layer is not configured administratively down). |
| **Step 23** | **end** or **commit**<br>**Example:**<br>`RP/0/0RSP0/CPU0:router(config-sonet)# end`<br>or<br>`RP/0/RSP0/CPU0:router(config-sonet)# commit` | Saves configuration changes.<br>• When you issue the **end** command, the system prompts you to commit changes:<br>`Uncommitted changes found, commit them before exiting(yes/no/cancel)? [cancel]:`<br>• Entering **yes** saves configuration changes to the running configuration file, exits the configuration session, and returns the router to EXEC mode. |

| | Command or Action | Purpose |
|---|---|---|
| | | • Entering **no** exits the configuration session and returns the router to EXEC mode without committing the configuration changes.<br>• Entering **cancel** leaves the router in the current configuration session without exiting or committing the configuration changes.<br>• Use the **commit** command to save the configuration changes to the running configuration file and remain within the configuration session. |
| **Step 24** | **show controllers sonet** *interface-path-id*<br>**Example:**<br>`RP/0/RSP0/CPU0:router# show controllers sonet 0/1/1/0` | Verifies the SONET controller configuration. |

# Configuring Packet over SONET Channels

This task explains how to configure Packet over SONET (POS) channels on SPAs supporting channelized SONET.

### Before you begin

You have one of the following SPAs installed:

- Cisco 1-Port Channelized OC-48/STM-16 SPA
- Cisco 2-Port Channelized OC-12/DS0 SPA

### SUMMARY STEPS

1. **configure**
2. **controller sonet** *interface-path-id*
3. **clock source** {**internal** | **line**}
4. **framing** {**sdh** | **sonet**}
5. **sts** *number*
6. **width** *number*
7. **mode** *mode* **scramble**
8. **root**
9. **interface pos** *interface-path-id*
10. **encapsulation** [**hdlc** | **ppp** | **frame-relay** [**IETF**]]
11. **pos crc** {**16** | **32**}
12. **mtu** *value*
13. **no shutdown**
14. **end** or **commit**
15. **show interfaces pos** *interface-path-id*

## DETAILED STEPS

| | Command or Action | Purpose |
|---|---|---|
| **Step 1** | **configure**<br>**Example:**<br>`RP/0/RSP0/CPU0:router# configure` | Enters global configuration mode. |
| **Step 2** | **controller sonet** *interface-path-id*<br>**Example:**<br>`RP/0/RSP0/CPU0:router(config)# controller sonet 0/1/1/0` | Enters SONET controller configuration submode and specifies the SONET controller name and *interface-path-id* with the *rack/slot/module/port* notation. |
| **Step 3** | **clock source** {**internal** \| **line**}<br>**Example:**<br>`RP/0/RSP0/CPU0:router(config-sonet)# clock source internal` | Configures the SONET port transmit clock source, where the **internal** keyword sets the internal clock and the **line** keyword sets the clock recovered from the line.<br>• Use the **line** keyword whenever clocking is derived from the network. Use the **internal** keyword when two routers are connected back to back or over fiber for which no clocking is available.<br>• **line** is the default keyword.<br>**Note** • Internal clocking is required for SRP interfaces. |
| **Step 4** | **framing** {**sdh** \| **sonet**}<br>**Example:**<br>`RP/0/RSP0/CPU0:router(config-sonet)# framing sonet` | (Optional) Configures the controller framing with either the **sdh** keyword for Synchronous Digital Hierarchy (SDH) framing or the **sonet** keyword for SONET framing.<br>SONET framing (**sonet**) is the default. |
| **Step 5** | **sts** *number*<br>**Example:**<br>`RP/0/RSP0/CPU0:router(config-sonet)# sts 1` | Configures the STS stream specified by *number*. The ranges are:<br>• 1 to 12 on the 2-Port Channelized OC12c/DS0 SPA<br>• 1 to 48 on the 1 Port Channelized OC48/DS3 SPA |
| **Step 6** | **width** *number*<br>**Example:**<br>`RP/0/RSP0/CPU0:router(config-stsPath)# width 3` | Configures the number of the STS streams that are concatenated. The possible values for *number* are:<br>• 3—Indicating three STS streams (STS-3c)<br>• 12—Indicating concatenation of 12 STS streams (STS-12c)<br>• 48—Indicating concatenation of 48 STS streams (STS-48c) |

| | Command or Action | Purpose |
|---|---|---|
| | | Widths 3, 12, and 48 are configured on STS paths at natural boundaries, which coincide with the following path numbers:<br>• 1, 4, 7, 10, and so on, for STS-3c<br>• 1, 13, 25, and 37 for STS-12c<br>• 1 for STS-48c<br>**Note** • POS interfaces are not supported when width is 1. |
| **Step 7** | **mode** *mode* **scramble**<br>**Example:**<br>`RP/0/RSP0/CPU0:router(config-stsPath)# mode pos scramble` | Sets the mode of interface at the STS level. Set the mode to pos to create POS interface (OC12 and OC48 only). |
| **Step 8** | **root**<br>**Example:**<br>`RP/0/RSP0/CPU0:router(config-stsPath)# root` | Exits to global configuration mode. |
| **Step 9** | **interface pos** *interface-path-id*<br>**Example:**<br>`RP/0/RSP0/CPU0:router(config)# interface POS 0/1/1/0` | Specifies the POS interface name and notation *rack/slot/module/port,* and enters interface configuration mode. |
| **Step 10** | **encapsulation** [**hdlc** \| **ppp** \| **frame-relay** [**IETF**]]<br>**Example:**<br>`RP/0/RSP0/CPU0:router(config-if)# encapsulation hdlc` | (Optional) Configures the interface encapsulation parameters and details such as HDLC or PPP. The default is HDLC. |
| **Step 11** | **pos crc** {**16** \| **32**}<br>**Example:**<br>`RP/0/RSP0/CPU0:router(config-if)# pos crc 32` | (Optional) Configures the CRC value for the interface. Enter the **16** keyword to specify 16-bit CRC mode, or enter the **32** keyword to specify 32-bit CRC mode.<br>The default CRC is **32**. |
| **Step 12** | **mtu** *value*<br>**Example:**<br>`RP/0/RSP0/CPU0:router(config-if)# mtu 4474` | (Optional) Configures the POS MTU value.<br>The range is 64–65535. |
| **Step 13** | **no shutdown**<br>**Example:** | Removes the shutdown configuration. |

| | Command or Action | Purpose |
|---|---|---|
| | `RP/0/RSP0/CPU0:router (config-if)# no shutdown` | **Note** • Removal of the shutdown configuration eliminates the forced administrative down on the interface, enabling it to move to an up or down state (assuming that the parent SONET layer is not configured administratively down). |
| **Step 14** | **end** or **commit**<br>**Example:**<br>`RP/0/RSP0/CPU0:router(config-sonet)# end`<br>or<br>`RP/0/RSP0/CPU0:router(config-sonet)# commit` | Saves configuration changes.<br>• When you issue the **end** command, the system prompts you to commit changes:<br>`Uncommitted changes found, commit them before exiting(yes/no/cancel)? [cancel]:`<br>• Entering **yes** saves configuration changes to the running configuration file, exits the configuration session, and returns the router to EXEC mode.<br>• Entering **no** exits the configuration session and returns the router to EXEC mode without committing the configuration changes.<br>• Entering **cancel** leaves the router in the current configuration session without exiting or committing the configuration changes.<br>• Use the **commit** command to save the configuration changes to the running configuration file and remain within the configuration session. |
| **Step 15** | **show interfaces pos** *interface-path-id*<br>**Example:**<br>`RP/0/0/CPU0:router# show interfaces pos 0/1/1/0` | (Optional) Displays the interface configuration. |

# Configuring a Clear Channel SONET Controller for T3

This task explains how to configure a SONET line into a single T3 serial channel called *clear channel*. Clear channel is established by setting the T3 controller mode to serial.

### Before you begin

- You should know how to configure the SONET controller as specified in the How to Configure Channelized SONET/SDH section of the *Configuring Clear Channel SONET Controllers* module.

## SUMMARY STEPS

1. **configure**
2. **controller sonet** *interface-path-id*
3. **clock source** {**internal** | **line**}
4. **framing sonet**
5. **sts** *number*
6. **mode t3**
7. **root**
8. **controller t3** *interface-path-id*
9. **mode serial**
10. **root**
11. **interface serial** *interface-path-id*
12. **encapsulation** {**frame-relay** | **hdlc** | **ppp**}
13. **ipv4** *ip-address mask*
14. **no shutdown**
15. **end** or **commit**
16. **show controllers sonet** *interface-path-id*

## DETAILED STEPS

| | Command or Action | Purpose |
|---|---|---|
| **Step 1** | **configure**<br>**Example:**<br>`RP/0/RSP0/CPU0:router# configure` | Enters global configuration mode. |
| **Step 2** | **controller sonet** *interface-path-id*<br>**Example:**<br>`RP/0/RSP0/CPU0:router(config)# controller sonet 0/1/1/0` | Enters SONET controller configuration submode and specifies the SONET controller name and *interface-path-id* with the *rack/slot/module/port* notation. |
| **Step 3** | **clock source** {**internal** | **line**}<br>**Example:**<br>`RP/0/RSP0/CPU0:router(config-sonet)# clock source internal` | Configures the SONET port transmit clock source, where the **internal** keyword sets the internal clock and the **line** keyword sets the clock recovered from the line.<br>• Use the **line** keyword whenever clocking is derived from the network. Use the **internal** keyword when two routers are connected back to back or over fiber for which no clocking is available.<br>• **line** is the default keyword.<br>**Note** • Internal clocking is required for SRP interfaces. |

| | Command or Action | Purpose |
|---|---|---|
| **Step 4** | **framing sonet**<br>**Example:**<br>`RP/0/RSP0/CPU0:router(config-sonet)# framing sonet` | Configures the controller for SONET framing. SONET framing (**sonet**) is the default. |
| **Step 5** | **sts** *number*<br>**Example:**<br>`RP/0/RSP0/CPU0:router(config-sonet)# sts 1` | Configures the STS stream specified by *number*. The ranges are:<br>• 1 to 48—1-Port Channelized OC-48/DS3 SPA<br>• 1 to 3—1-Port Channelized OC-3/STM-1 SPA<br>• 1 to 12—2-Port Channelized OC-12/DS0 SPA |
| **Step 6** | **mode t3**<br>**Example:**<br>`RP/0/RSP0/CPU0:router(config-stsPath)# mode t3` | Sets the mode of the interface at the STS level for T3. |
| **Step 7** | **root**<br>**Example:**<br>`RP/0/RSP0/CPU0:router(config-stsPath)# root` | Exits to global configuration mode. |
| **Step 8** | **controller t3** *interface-path-id*<br>**Example:**<br>`RP/0/RSP0/CPU0:router(config)# controller t3 0/1/1/0/0` | Enters T3 controller configuration submode and specifies the T3 controller name and interface-path-id identifier with the *rack/slot/module/port/T3Num* notation. |
| **Step 9** | **mode serial**<br>**Example:**<br>`RP/0/RSP0/CPU0:router(config-t3)# mode serial` | Sets the mode of the interface to serial to establish a clear channel. |
| **Step 10** | **root**<br>**Example:**<br>`RP/0/RSP0/CPU0:router(config-t3)# root` | Exits to global configuration mode. |
| **Step 11** | **interface serial** *interface-path-id*<br>**Example:**<br>`RP/0/RSP0/CPU0:router(config)# interface serial 0/1/1/0/0/0:0` | Specifies the complete interface number with the *rack/slot/module/port/T3Num/T1num:instance* notation. |
| **Step 12** | **encapsulation** {**frame-relay** \| **hdlc** \| **ppp**}<br>**Example:** | Specifies the encapsulation type with the one of the following keywords: |

| | Command or Action | Purpose |
|---|---|---|
| | `RP/0/RSP0/CPU0:router(config-if)# encapsulation ppp` | • **frame-relay**—Frame Relay network protocol<br>• **hdlc**—High-level Data Link Control (HDLC) synchronous protocol<br>• **ppp**—Point-to-Point Protocol |
| **Step 13** | **ipv4** *ip-address mask*<br>**Example:**<br>`RP/0/RSP0/CPU0:router(config-if)# ip address 10.10.10.10 255.255.255.255` | Assigns an IP address and subnet mask to the interface. |
| **Step 14** | **no shutdown**<br>**Example:**<br>`RP/0/RSP0/CPU0:router(config-if)# no shutdown` | Removes the shutdown configuration.<br>**Note** • Removal of the shutdown configuration eliminates the forced administrative down on the interface, enabling it to move to an up or down state (assuming that the parent SONET layer is not configured administratively down). |
| **Step 15** | **end** or **commit**<br>**Example:**<br>`RP/0/RSP0/CPU0:router(config-sonet)# end`<br>or<br>`RP/0/RSP0/CPU0:router(config-sonet)# commit` | Saves configuration changes.<br>• When you issue the **end** command, the system prompts you to commit changes:<br>`Uncommitted changes found, commit them before exiting(yes/no/cancel)? [cancel]:`<br>• Entering **yes** saves configuration changes to the running configuration file, exits the configuration session, and returns the router to EXEC mode.<br>• Entering **no** exits the configuration session and returns the router to EXEC mode without committing the configuration changes.<br>• Entering **cancel** leaves the router in the current configuration session without exiting or committing the configuration changes.<br>• Use the **commit** command to save the configuration changes to the running configuration file and remain within the configuration session. |
| **Step 16** | **show controllers sonet** *interface-path-id*<br>**Example:**<br>`RP/0//RSP0/CPU0:router# show controllers sonet 0/1/1/0` | Verifies the SONET controller configuration. |

# Configuring Channelized SONET APS

This task explains how to configure APS for channelized SONET lines.

### Before you begin

- You should know how to configure the SONET controller as specified in the How to Configure Channelized SONET/SDH section of the *Configuring Clear Channel SONET Controllers* module.
- You should know how to configure the SONET APS as specified in the Configuring SONET APS, on page 486 section of the *Configuring Clear Channel SONET Controllers* module.

### Restrictions

- SONET APS is not supported on the 1-Port Channelized OC-48/STM-16 SPA.
- The Cisco ASR 9000 Series Router supports multirouter APS only on the following SPAS:
  - 1-Port Channelized OC-3/STM-1 SPA
  - 2-Port Channelized OC-12c/DS0 SPA

## SUMMARY STEPS

1. **aps group** *number*
2. **channel 0 local sonet** *interface*
3. or
4. **channel 0 remote** *ip-address*
5. **channel 1 local sonet** *interface*
6. or
7. **channel 1 remote** *ip-address*
8. **signalling** {**sonet** | **sdh**}
9. **end** or **commit**
10. **show aps**
11. **show aps group** [*number*]

## DETAILED STEPS

| | Command or Action | Purpose |
|---|---|---|
| **Step 1** | **aps group** *number*<br>**Example:**<br>`RP/0/RSP0/CPU0:router(config)# aps group 1` | Adds an APS group with a specified number and enters APS group configuration mode.<br>• Use the **aps group** command in global configuration mode.<br>• To remove a group, use the **no** form of this command, as in: **no aps group** *number*, where the value range is from 1 to 255. |

| | Command or Action | Purpose |
|---|---|---|
| | | **Note** • To use the **aps group** command, you must be a member of a user group associated with the proper task IDs for APS commands.<br>• The **aps group** command is used even when a single protect group is configured. |
| **Step 2** | **channel 0 local sonet** *interface* | |
| **Step 3** | or | |
| **Step 4** | **channel 0 remote** *ip-address*<br>**Example:**<br>`RP/0/RSP0/CPU0:router(config-aps)# channel 0 local SONET 0/0/0/1`<br>`or`<br>`RP/0/RSP0/CPU0:router(config-aps)# channel 0 remote 172.18.69.123` | Creates a protect channel for the APS group, where **0** designates a protect channel.<br>**Note** • The protect channel must be assigned before the active channel can be assigned.<br>• To configure APS where both channels are on one router, use the **channel local** command for both the protect and active channels. To configure APS using two different routers where the active channel is on one router and the protect channel is on another router, use the **channel local** command for either the protect or the active channel, but use the **channel remote** command for the other channel. |
| **Step 5** | **channel 1 local sonet** *interface* | |
| **Step 6** | or | |
| **Step 7** | **channel 1 remote** *ip-address*<br>**Example:**<br>`RP/0/RSP0/CPU0:router(config-aps)# channel 1 local SONET 0/0/0/2`<br>`or`<br>`RP/0/0/CPU0:router(config-aps)# channel 1 remote 172.18.69.123` | Creates an active channel for the APS group, where **1** designates an active channel.<br>**Note** • The active channel must be assigned after the protect channel is assigned.<br>• To configure APS where both channels are on one router, use the **channel local** command for both the protect and active channels. To configure APS using two different routers where the active channel is on one router and the protect channel is on another router, use the **channel local** command for either the protect or the active channel, but use the **channel remote** command for the other channel. |

| | Command or Action | Purpose |
|---|---|---|
| **Step 8** | **signalling** {**sonet** \| **sdh**}<br>**Example:**<br>`RP/0/RSP0/CPU0:router(config-aps)# signalling sonet` | Configures the K1K2 overhead byte used for automatic protection switching (APS). The keyword options are:<br>• **sonet**—Sets signaling to SONET.<br>• **sdh**—Sets signaling to Synchronous Digital Hierarchy (SDH). |
| **Step 9** | **end** or **commit**<br>**Example:**<br>`RP/0/RSP0/CPU0:router(config-sonet)# end`<br>or<br>`RP/0/RSP0/CPU0:router(config-sonet)# commit` | Saves configuration changes.<br>• When you issue the **end** command, the system prompts you to commit changes:<br>`Uncommitted changes found, commit them before exiting(yes/no/cancel)? [cancel]:`<br>• Entering **yes** saves configuration changes to the running configuration file, exits the configuration session, and returns the router to EXEC mode.<br>• Entering **no** exits the configuration session and returns the router to EXEC mode without committing the configuration changes.<br>• Entering **cancel** leaves the router in the current configuration session without exiting or committing the configuration changes.<br>• Use the **commit** command to save the configuration changes to the running configuration file and remain within the configuration session. |
| **Step 10** | **show aps**<br>**Example:**<br>`RP/0/RSP0/CPU0:router# show aps` | (Optional) Displays the operational status for all configured SONET APS groups. |
| **Step 11** | **show aps group** [*number*]<br>**Example:**<br>`RP/0/RSP0/CPU0:router# show aps group 3` | (Optional) Displays the operational status for configured SONET APS groups.<br>**Note** • The **show aps group** command is more useful than the **show aps** command when multiple groups are defined. |

# Configuring SDH AU-3

This section includes the following tasks:

# Configuring SDH AU-3 Mapped to C11-T1 or C12-E1

This task explains how to configure SDH AU-3 with c11-t1 or c12-e1 mapping.

### Before you begin

- You should know how to configure the SONET controller as specified in the How to Configure Channelized SONET/SDH section of the *Configuring Clear Channel SONET Controllers* module.

### Restrictions

Channelized SDH AU-3 with c11-t1 or c12-e1 mapping is supported on the following SPAs:

- Cisco 1-Port Channelized OC-3/STM-1 SPA
- Cisco 2-Port Channelized OC-12c/DS0 SPA

## SUMMARY STEPS

1. **configure**
2. **controller sonet** *interface-path-id*
3. **clock source** {**internal** | **line**}
4. **framing sdh**
5. **au** *number*
6. **mode** *mode*
7. **root**
8. **controller t1** *interface-path-id*
9. **channel-group** *number*
10. **timeslots** *num1:num2:num3:num4*
11. or
12. **timeslots** *range1-range2*
13. **show configuration**
14. **root**
15. **interface serial** *interface-path-id*
16. **encapsulation** {**frame-relay** | **hdlc** | **ppp**}
17. **ipv4** *ip-address mask*
18. **no shutdown**
19. **end** or **commit**
20. **show controllers sonet** *interface-path-id*

## DETAILED STEPS

| | Command or Action | Purpose |
|---|---|---|
| **Step 1** | **configure**<br>**Example:**<br>`RP/0/RSP0/CPU0:router# configure` | Enters global configuration mode. |

| | Command or Action | Purpose |
|---|---|---|
| **Step 2** | **controller sonet** *interface-path-id*<br>**Example:**<br>`RP/0/RSP0/CPU0:router(config)# controller sonet 0/1/1/0` | Enters SONET controller configuration submode and specifies the SONET controller name and interface-path-id identifier with the *rack/slot/module/port* notation. |
| **Step 3** | **clock source** {**internal** \| **line**}<br>**Example:**<br>`RP/0/RSP0/CPU0:router(config-sonet)# clock source internal` | Configures the SONET port transmit clock source, where the **internal** keyword sets the internal clock and the **line** keyword sets the clock recovered from the line.<br>• Use the **line** keyword whenever clocking is derived from the network. Use the **internal** keyword when two routers are connected back to back or over fiber for which no clocking is available.<br>• **line** is the default keyword.<br>**Note** • Internal clocking is required for SRP interfaces. |
| **Step 4** | **framing sdh**<br>**Example:**<br>`RP/0/RSP0/CPU0:router(config-sonet)# framing sdh` | Configures the controller framing for Synchronous Digital Hierarchy (SDH) framing.<br>SONET framing (**sonet**) is the default. |
| **Step 5** | **au** *number*<br>**Example:**<br>`RP/0/RSP0/CPU0:router(config-sonet)# au 1` | Specifies the administrative unit (AU) group and enters AU path configuration mode. For AU-3, the valid range is:<br>• 1 to 3—1-Port Channelized OC-3/STM-1 SPA<br>• 1 to 12—2-Port Channelized OC-12c/DS0 SPA<br>**Note** • The **au** command does not specify the AU type. It specifies the number of the AU group for the AU type that you want to configure. The range for the AU command varies based on whether you are configuring AU-3 or AU-4. |
| **Step 6** | **mode** *mode*<br>**Example:**<br>`RP/0/RSP0/CPU0:router(config-auPath)# mode c11-t1` | Sets the mode of interface at the AU level. AU-3 paths can be mapped to c11-t1 or c12-e1 on supported SPAs. |
| **Step 7** | **root**<br>**Example:** | Exits to global configuration mode. |

| | Command or Action | Purpose |
|---|---|---|
| | `RP/0/RSP0/CPU0:router(config-auPath)# root` | |
| **Step 8** | **controller t1** *interface-path-id*<br>**Example:**<br>`RP/0/RSP0/CPU0:router(config)# controller T1 0/1/1/0/0/0/0` | Enters T1 controller configuration submode and specifies the T1 controller name and *interface-path-id* with the *rack/slot/module/port/auNum/t1Num* notation. |
| **Step 9** | **channel-group** *number*<br>**Example:**<br>`RP/0/RSP0/CPU0:router(config-t1)# channel-group 0` | Sets the channel-group number to which time slots are assigned. The range is from 1 to 28. |
| **Step 10** | **timeslots** *num1:num2:num3:num4* | |
| **Step 11** | or | |
| **Step 12** | **timeslots** *range1-range2*<br>**Example:**<br>`RP/0/RSP0/CPU0:router(config-t1-channel_group)# timeslots 1:3:7:9`<br>`RP/0/RSP0/CPU0:router(config-t1-channel_group)# timeslots 1-12` | Specifies time slots for the interface by number with the *num1:num2:num3:num4* notation, or by range with the *range1-range2* notation. |
| **Step 13** | **show configuration**<br>**Example:**<br>`RP/0/RSP0/CPU0:router(config-t1-channel_group)# show configuration` | Displays the contents of uncommitted configuration. |
| **Step 14** | **root**<br>**Example:**<br>`RP/0/RSP0/CPU0:router(config-t3)# root` | Exits to global configuration mode. |
| **Step 15** | **interface serial** *interface-path-id*<br>**Example:**<br>`RP/0/RSP0/CPU0:router(config)# interface serial 0/1/1/0/0/0:0` | Specifies the complete interface number with the *rack/slot/module/port/T3Num/T1num:instance* notation. |
| **Step 16** | **encapsulation** {**frame-relay** \| **hdlc** \| **ppp**}<br>**Example:**<br>`RP/0/RSP0/CPU0:router(config-if)# encapsulation frame-relay` | Specifies the encapsulation type with the one of the following keywords:<br>• **frame-relay**—Frame Relay network protocol<br>• **hdlc**—High-level Data Link Control (HDLC) synchronous protocol |

| | Command or Action | Purpose |
|---|---|---|
| | | • **ppp**—Point-to-Point Protocol |
| **Step 17** | **ipv4** *ip-address mask*<br>**Example:**<br>`RP/0/RSP0/CPU0:router(config-if)# ip address 10.10.10.10 255.255.255.255` | Assigns an IP address and subnet mask to the interface. |
| **Step 18** | **no shutdown**<br>**Example:**<br>`RP/0/RSP0/CPU0:router(config-if)# no shutdown` | Removes the shutdown configuration.<br>**Note** • Removal of the shutdown configuration eliminates the forced administrative down on the interface, enabling it to move to an up or down state (assuming that the parent SONET layer is not configured administratively down). |
| **Step 19** | **end** or **commit**<br>**Example:**<br>`RP/0/RSP0/CPU0:router(config-sonet)# end`<br>or<br>`RP/0/RSP0/CPU0:router(config-sonet)# commit` | Saves configuration changes.<br>• When you issue the **end** command, the system prompts you to commit changes:<br>`Uncommitted changes found, commit them before exiting(yes/no/cancel)? [cancel]:`<br>• Entering **yes** saves configuration changes to the running configuration file, exits the configuration session, and returns the router to EXEC mode.<br>• Entering **no** exits the configuration session and returns the router to EXEC mode without committing the configuration changes.<br>• Entering **cancel** leaves the router in the current configuration session without exiting or committing the configuration changes.<br>• Use the **commit** command to save the configuration changes to the running configuration file and remain within the configuration session. |
| **Step 20** | **show controllers sonet** *interface-path-id*<br>**Example:**<br>`RP/0/RSP0/CPU0:router# show controllers sonet 0/1/1/0` | Verifies the SONET controller configuration. |

# Configuring SDH AU-3 Mapped to T3 or E3

This task explains how to configure SDH AU-3 mapped to T3 or E3.

### Before you begin

- You should know how to configure the SONET controller as specified in the How to Configure Channelized SONET/SDH section of the *Configuring Clear Channel SONET Controllers* module.

### Restrictions

Channelized SDH AU-3 with T3 or E3 mapping is supported on the following SPAs:

- Cisco 1-Port Channelized OC-48/STM-16 SPA
- Cisco 1-Port Channelized OC-3/STM-1 SPA
- Cisco 2-Port Channelized OC-12c/DS0 SPA

## SUMMARY STEPS

1. **configure**
2. **controller sonet** *interface-path-id*
3. **clock source** {**internal** | **line**}
4. **framing sdh**
5. **au** *number*
6. **mode t3**
7. or
8. **mode e3**
9. **root**
10. **controller** {**t3** | **e3**} *interface-path-id*
11. **mode serial**
12. **show configuration**
13. **root**
14. **interface serial** *interface-path-id*
15. **encapsulation frame-relay** | **hdlc** | **ppp**
16. **ipv4** *ip-address mask*
17. **no shutdown**
18. **end** or **commit**
19. **show controllers sonet** *interface-path-id*

## DETAILED STEPS

| | Command or Action | Purpose |
|---|---|---|
| **Step 1** | **configure**<br>**Example:**<br>`RP/0/RSP0/CPU0:router# configure` | Enters global configuration mode. |

| | Command or Action | Purpose |
|---|---|---|
| **Step 2** | **controller sonet** *interface-path-id*<br>**Example:**<br>`RP/0/RSP0/CPU0:router(config)# controller sonet 0/1/1/0` | Enters SONET controller configuration submode and specifies the SONET controller name and interface-path-id identifier with the *rack/slot/module/port* notation. |
| **Step 3** | **clock source** {**internal** \| **line**}<br>**Example:**<br>`RP/0/RSP0/CPU0:router(config-sonet)# clock source internal` | Configures the SONET port transmit clock source, where the **internal** keyword sets the internal clock and the **line** keyword sets the clock recovered from the line.<br>• Use the **line** keyword whenever clocking is derived from the network. Use the **internal** keyword when two routers are connected back to back or over fiber for which no clocking is available.<br>• **line** is the default keyword.<br>**Note** • Internal clocking is required for SRP interfaces. |
| **Step 4** | **framing sdh**<br>**Example:**<br>`RP/0/RSP0/CPU0:router(config-sonet)# framing sdh` | Configures the controller framing for Synchronous Digital Hierarchy (SDH) framing.<br>SONET framing (**sonet**) is the default. |
| **Step 5** | **au** *number*<br>**Example:**<br>`RP/0/RSP0/CPU0:router(config-sonet)# au 1` | Specifies the administrative unit (AU) group and enters AU path configuration mode. For AU-3, the valid range is:<br>• 1 to 48—1-Port Channelized OC-48/DS3 SPA<br>• 1 to 3—1-Port Channelized OC-3/STM-1 SPA<br>• 1 to 12—2-Port Channelized OC-12c/DS0 SPA<br>**Note** • The **au** command does not specify the AU type. It specifies the number of the AU group for the AU type that you want to configure. The range for the AU command varies based on whether you are configuring AU-3 or AU-4. |
| **Step 6** | **mode t3** | |
| **Step 7** | or | |
| **Step 8** | **mode e3**<br>**Example:** | Sets the mode of interface at the AU level to T3 or E3. |

| | Command or Action | Purpose |
|---|---|---|
| | `RP/0/RSP0/CPU0:router(config-auPath)# mode t3` | |
| **Step 9** | **root**<br>**Example:**<br>`RP/0/RSP0/CPU0:router(config-auPath)# root` | Exits to global configuration mode. |
| **Step 10** | **controller** {**t3** \| **e3**} *interface-path-id*<br>**Example:**<br>`RP/0/RSP0/CPU0:router(config)# controller T3 0/1/1/0/0` | Enters T3 or E3 controller configuration submode and specifies the T3 or E3 controller name and *interface-path-id* with the *rack/slot/module/port/auNum* notation. |
| **Step 11** | **mode serial**<br>**Example:**<br>`RP/0/RSP0/CPU0:router(config-t3)# mode serial` | Configures the mode of the port to be clear channel serial. |
| **Step 12** | **show configuration**<br>**Example:**<br>`RP/0/RSP0/CPU0:router(config-t3)# show configuration` | Displays the contents of uncommitted configuration. |
| **Step 13** | **root**<br>**Example:**<br>`RP/0/RSP0/CPU0:router(config-t3)# root` | Exits to global configuration mode. |
| **Step 14** | **interface serial** *interface-path-id*<br>**Example:**<br>`RP/0/RSP0/CPU0:router(config)# interface serial 0/1/1/0/0/0:0` | Specifies the complete interface number with the *rack/slot/module/port/T3Num/T1num:instance* notation. |
| **Step 15** | **encapsulation frame-relay** \| **hdlc** \| **ppp**<br>**Example:**<br>`RP/0/RSP0/CPU0:router(config-if)# encapsulation frame-relay \| hdlc \| ppp` | Specifies the encapsulation type with the one of the following keywords:<br>• **frame-relay**—Frame Relay network protocol<br>• **hdlc**—High-level Data Link Control (HDLC) synchronous protocol<br>• **ppp**—Point-to-Point Protocol |
| **Step 16** | **ipv4** *ip-address mask*<br>**Example:** | Assigns an IP address and subnet mask to the interface. |

| | Command or Action | Purpose |
|---|---|---|
| | `RP/0/RSP0/CPU0:router(config-if)# ip address 10.10.10.10 255.255.255.255` | |
| **Step 17** | **no shutdown**<br>**Example:**<br>`RP/0/RSP0/CPU0:router(config-if)# no shutdown` | Removes the shutdown configuration.<br>**Note** • Removal of the shutdown configuration eliminates the forced administrative down on the interface, enabling it to move to an up or down state (assuming that the parent SONET layer is not configured administratively down). |
| **Step 18** | **end** or **commit**<br>**Example:**<br>`RP/0/RSP0/CPU0:router(config-sonet)# end`<br>or<br>`RP/0/RSP0/CPU0:router(config-sonet)# commit` | Saves configuration changes.<br>• When you issue the **end** command, the system prompts you to commit changes:<br>`Uncommitted changes found, commit them before exiting(yes/no/cancel)? [cancel]:`<br>• Entering **yes** saves configuration changes to the running configuration file, exits the configuration session, and returns the router to EXEC mode.<br>• Entering **no** exits the configuration session and returns the router to EXEC mode without committing the configuration changes.<br>• Entering **cancel** leaves the router in the current configuration session without exiting or committing the configuration changes.<br>• Use the **commit** command to save the configuration changes to the running configuration file and remain within the configuration session. |
| **Step 19** | **show controllers sonet** *interface-path-id*<br>**Example:**<br>`RP/0/RSP0/CPU0:router# show controllers sonet 0/1/1/0` | Verifies the SONET controller configuration. |

# Configuring SDH AU-4

This task explains how to configure an SDH AU-4 stream into a TUG-3 channel mapped to E3s.

### Before you begin

- You should know how to configure the SONET controller as specified in the How to Configure Channelized SONET/SDH section of the *Configuring Clear Channel SONET Controllers* module.

### Restrictions

- Channelized SDH is supported on the following SPAs:
  - Cisco 1-Port Channelized OC-48/STM-16 SPA
  - Cisco 1-Port Channelized OC-3/STM-1 SPA
  - Cisco 2-Port Channelized OC-12/DS0 SPA
- In this release, AU-4 paths can only be channelized into TUG-3s.
- The 1-Port Channelized OC-48/STM-16 SPA does not support T1 or E1 channelization.

## SUMMARY STEPS

1. **configure**
2. **controller sonet** *interface-path-id*
3. **clock source** {**internal** | **line**}
4. **framing sdh**
5. **au** *number*
6. **mode tug3**
7. **width** *number*
8. **tug3** *number*
9. **mode** *mode*
10. **root**
11. **controller** *name instance*
12. **mode** *mode*
13. **root**
14. **controller** *name instance*
15. **channel-group** *number*
16. **timeslots** *num1:num2:num3:num4*
17. or
18. **timeslots** *range1-range2*
19. **show configuration**
20. **root**
21. **interface serial** *interface-path-id*
22. **encapsulation** {**frame-relay** | **hdlc** | **ppp**}
23. **ipv4** *ip-address mask*
24. **no shutdown**
25. **end** or **commit**
26. **show controllers sonet** *interface-path-id*

## DETAILED STEPS

| | Command or Action | Purpose |
|---|---|---|
| **Step 1** | **configure**<br>**Example:**<br>`RP/0/0/CPU0:router# configure` | Enters global configuration mode. |
| **Step 2** | **controller sonet** *interface-path-id*<br>**Example:**<br>`RP/0/0/CPU0:router(config)# controller sonet 0/1/1/0` | Enters SONET controller configuration submode and specifies the SONET controller name and *interface-path-id* with the *rack/slot/module/port* notation. |
| **Step 3** | **clock source** {**internal** \| **line**}<br>**Example:**<br>`RP/0/0/CPU0:router(config-sonet)# clock source internal` | Configures the SONET port transmit clock source, where the **internal** keyword sets the internal clock and the **line** keyword sets the clock recovered from the line.<br>• Use the **line** keyword whenever clocking is derived from the network. Use the **internal** keyword when two routers are connected back to back or over fiber for which no clocking is available.<br>• **line** is the default keyword.<br>**Note** • Internal clocking is required for SRP interfaces. |
| **Step 4** | **framing sdh**<br>**Example:**<br>`RP/0/0/CPU0:router(config-sonet)# framing sdh` | Configures the controller for Synchronous Digital Hierarchy (SDH) framing.<br>SONET framing (**sonet**) is the default. |
| **Step 5** | **au** *number*<br>**Example:**<br>`RP/0/RSP0/CPU0:router(config-sonet)# au 1` | Specifies the administrative unit (AU) group and enters AU path configuration mode. For AU-4, the valid range is:<br>• 1 to 16—1-Port Channelized OC-48/DS3 SPA<br>• 1 to 3—1-Port Channelized OC-3/STM-1 SPA<br>• 1 to 4—2-Port Channelized OC-12c/DS0 SPA<br>**Note** • The **au** command does not specify the AU type. It specifies the number of the AU group for the AU type that you want to configure. The range for the AU command varies based on whether you are configuring AU-3 or AU-4. |

| | Command or Action | Purpose |
|---|---|---|
| **Step 6** | **mode tug3**<br>**Example:**<br>`RP/0/0/CPU0:router(config-auPath)# mode tug3` | Sets the mode of interface at the AU level. Currently only TUG3 is supported. |
| **Step 7** | **width** *number*<br>**Example:**<br>`RP/0/0/CPU0:router(config-auPath)# width 3` | Configures the number of the AU streams. |
| **Step 8** | **tug3** *number*<br>**Example:**<br>`RP/0/0/CPU0:router(config-auPath)#tug3 1` | Specifies the Tributary Unit Group (TUG) *number* and enters the config-tug3Path mode. The range is 1 to 3. |
| **Step 9** | **mode** *mode*<br>**Example:**<br>`RP/0/0/CPU0:router(config-tug3Path)# mode e3` | Sets the mode of interface at the tug3 level. The modes are:<br>• **c11**—TUG-3 path carrying TU-11<br>• **c11-t1**—TUG-3 path carrying TU-11 to T1<br>• **c12**—TUG-3 path carrying TU-12<br>• **c12-e1**—TUG-3 path carrying TU-12 to E1<br>• **e3**—TUG-3 path carrying E3<br>• **t3**—TUG-3 path carrying T3<br>**Note** • The 1-Port Channelized OC-48/STM-16 SPA only supports the **e3** and **t3** options. |
| **Step 10** | **root**<br>**Example:**<br>`RP/0/0/CPU0:router(config-tug3Path)# root` | Exits to global configuration mode. |
| **Step 11** | **controller** *name instance*<br>**Example:**<br>`RP/0/0/CPU0:router(config)# controller e3 0/1/1/0/0/0` | Enters controller configuration submode and specifies the controller name and instance identifier with the *rack/slot/module/port/name/instance* notation. The controller names are:<br>• **e3**—TUG3 path carrying E3<br>• **t3**—TUG3 path carrying T3<br>• **e1**—channelized E1 port |

| | Command or Action | Purpose |
|---|---|---|
| | | **Note** • In this step, you can create an E3 or T3 controller and add T1 channels under the T3 controller as shown inStep 14, or you can create a channelized E1 port at this point.<br>• E1 is not supported on the 1-Port Channelized OC-48/STM-16 SPA. |
| **Step 12** | **mode** *mode*<br>**Example:**<br>`RP/0/0/CPU0:router(config-e3)#mode e1` | Sets the mode of interface. The modes are:<br>• **e1**—Channelized into 21 E1s<br>• **serial**—Clear Channel carrying HDLC-like payload<br>• **t1**—Channelized into 28 T1s<br>**Note** • T1 and E1 are not supported on the 1-Port Channelized OC-48/STM-16 SPA. |
| **Step 13** | **root**<br>**Example:**<br>`RP/0/0/CPU0:router(config-e3)# root` | Exits to global configuration mode. |
| **Step 14** | **controller** *name instance*<br>**Example:**<br>`RP/0/0/CPU0:router(config)# controller E1 0/1/1/0/0/0/0/0` | Enters controller configuration submode and specifies the controller name and instance identifier with the *rack/slot/module/port/name/instance1/instance2* notation. The controller names are:<br>• serial—Clear Channel carrying HDLC-like payload.<br>• t1—Channelized into 24 T1s. |
| **Step 15** | **channel-group** *number*<br>**Example:**<br>`RP/0/0/CPU0:router(config-e1)# channel-group 0` | Sets the channel-group number to which time slots are assigned.<br>• For t1, the range is from 1 to 24.<br>• For e1, the range is from 1 to 32. |
| **Step 16** | **timeslots** *num1:num2:num3:num4* | |
| **Step 17** | or | |
| **Step 18** | **timeslots** *range1-range2*<br>**Example:**<br>`RP/0/0/CPU0:router(config-e1-channel_group)# timeslots 1:3:7:9` | Specifies time slots for the interface by number with the *num1:num2:num3:num4* notation, or by range with the *range1-range2* notation. |

| | Command or Action | Purpose |
|---|---|---|
| | `RP/0/0/CPU0:router(config-e1-channel_group)# timeslots 1-12` | |
| **Step 19** | **show configuration**<br>**Example:**<br>`RP/0/0/CPU0:router(config-e1-channel_group)# show configuration` | Displays the contents of uncommitted configuration. |
| **Step 20** | **root**<br>**Example:**<br>`RP/0/0/CPU0:router(config-e1-channel_group)# root` | Exits to global configuration mode. |
| **Step 21** | **interface serial** *interface-path-id*<br>**Example:**<br>`RP/0/0/CPU0:router(config)# interface serial 0/1/1/0/0/0:0` | Specifies the complete interface number with the *rack/slot/module/port/T3Num/T1num:instance* notation. |
| **Step 22** | **encapsulation** {**frame-relay** \| **hdlc** \| **ppp**}<br>**Example:**<br>`Router(config-if)# encapsulation frame-relay \| hdlc \| ppp` | Specifies the encapsulation type with the one of the following keywords:<br>• **frame-relay**—Frame Relay network protocol<br>• **hdlc**—High-level Data Link Control (HDLC) synchronous protocol<br>• **ppp**—Point-to-Point Protocol |
| **Step 23** | **ipv4** *ip-address mask*<br>**Example:**<br>`Router(config-if)# ip address 10.10.10.10 255.255.255.255` | Assigns an IP address and subnet mask to the interface. |
| **Step 24** | **no shutdown**<br>**Example:**<br>`RP/0/0/CPU0:router (config-if)# no shutdown` | Removes the shutdown configuration.<br>**Note** • Removal of the shutdown configuration eliminates the forced administrative down on the interface, enabling it to move to an up or down state (assuming that the parent SONET layer is not configured administratively down). |
| **Step 25** | **end** or **commit**<br>**Example:**<br>`RP/0/0/CPU0:router(config-sonet)# end` | Saves configuration changes.<br>• When you issue the **end** command, the system prompts you to commit changes: |

| | Command or Action | Purpose |
|---|---|---|
| | or<br><br>`RP/0/0/CPU0:router(config-sonet)# commit` | `Uncommitted changes found, commit them before exiting(yes/no/cancel)? [cancel]:`<br>• Entering **yes** saves configuration changes to the running configuration file, exits the configuration session, and returns the router to EXEC mode.<br>• Entering **no** exits the configuration session and returns the router to EXEC mode without committing the configuration changes.<br>• Entering **cancel** leaves the router in the current configuration session without exiting or committing the configuration changes.<br>• Use the **commit** command to save the configuration changes to the running configuration file and remain within the configuration session. |
| **Step 26** | **show controllers sonet** *interface-path-id*<br>**Example:**<br><br>`RP/0/0/CPU0:router# show controllers sonet 0/1/1/0` | Verifies the SONET controller configuration. |

# Configuration Examples for Channelized SONET

This section contains the following examples:

## Channelized SONET Examples

### Channelized SONET T3 to T1 Configuration: Example

This example shows SONET T3 to T1 configuration.

```
configure
controller sonet 0/1/1/0
  clock source internal
  framing sonet
  sts 1
  mode t3
  width 3
  root
 controller t3 0/1/1/0/0
  mode t1
framing auto-detect
  root
 controller t1 0/1/1/0/0/0
  framing esf
```

```
  channel-group 0
   timeslots 1:3:7:9
 show configuration
  root
 interface serial 0/1/1/0/0/0:0
 encapsulation hdlc
 ip address 10.10.10.10 255.255.255.255
 no shutdown
  commit
show controllers sonet 0/1/1/0
```

## Channelized SONET in VT1.5 Mode and T1 Channelization to NxDS0

**Note** This example is not supported on the 1-Port Channelized OC-48/STM-16 SPA.

This example shows how to configure SONET channelized to NxDS0s through SONET VT1.5 mode:

```
configure
controller sonet 0/1/1/0
  clock source internal
  framing sonet
  sts 1
  mode vt15-t1
  root
controller t1 0/1/1/0/0/0
 channel-group 0 timeslots 1
  channel-group 1 timeslots 2-3
  commit
```

## Channelized Packet over SONET Configuration: Example

This example shows Channelized Packet over SONET configuration.

```
configure
 controller sonet 0/1/1/0
  clock source internal
  framing sonet
  sts 1
  mode pos scramble
  width 3
  root
 interface POS 0/1/1/0
  encapsulation hdlc
  pos crc 32
  mtu 4474
  no shutdown
 commit
show interfaces pos 0/1/1/0
```

## SONET Clear Channel T3 Configuration: Example

This example shows SONET clear channel configuration for T3:

```
configure
 controller sonet 0/1/1/0
```

```
  clock source internal
  framing sonet
  sts 1
  mode t3
  root
 controller t3 0/1/1/0/0
  mode serial
  root
 interface serial 0/1/1/0/0/0:0
 encapsulation ppp
 ip address 10.10.10.10 255.255.255.255
 no shutdown
  commit
show controllers sonet 0/1/1/0
```

## Channelized SONET APS Multirouter Configuration: Example

This example shows SONET APS multirouter configuration.

```
 aps group 1
  channel 0 local SONET 0/0/0/1
  channel 1 remote 172.18.69.123

  signalling sonet

  commit
show aps
show aps group 3
```

# Channelized SDH Examples

## Channelized SDH AU-3 Configuration: Examples

This section includes the following configuration examples

## Channelized SDH AU-3 to VC-3 and Clear Channel T3/E3: Examples

This example shows how to configure SDH AU-3 to VC-3 and clear channel T3:

```
configure
 controller sonet 0/1/1/0
  clock source internal
  framing sdh
  au 1
  width 1
  mode t3
  root
 controller t3 0/1/1/0/1
  mode serial
  commit
```

This example shows how to configure SDH AU-3 to VC-3 and clear channel E3:

```
configure
 controller sonet 0/1/1/0
  clock source internal
```

```
  framing sdh
  au 1
  width 1
  mode e3
  root
 controller e3 0/1/1/0/1
  mode serial
  commit
```

## Channelized SDH AU-3 to TUG-2, VC-11, T1 and NxDS0s: Example

**Note** This example is not supported on the 1-Port Channelized OC-48/STM-16 SPA.

The following example shows how to configure SDH AU-3 to TUG-2, VC-11 and channelized T1 to NxDS0s:

```
configure
 controller sonet 0/1/1/0
  clock source internal
  framing sdh
  au 1
  mode c11-t1
  width 1
  root
 controller T1 0/1/1/0/0/1/1
  channel-group 0
   timeslots 1-12
   show configuration
  root
 interface serial 0/1/1/0/1/1:0
 encapsulation ppp
 ip address 10.10.10.10 255.255.255.255
 no shutdown
 commit
show controllers sonet 0/1/1/0
```

## Channelized SDH AU-3 to TUG-2, VC-12, E1 and NxDS0s: Example

**Note** This example is not supported on the 1-Port Channelized OC-48/STM-16 SPA.

The following example shows how to configure SDH AU-3 to TUG-2, VC-12 and channelized E1 to NxDS0s:

```
configure
 controller sonet 0/1/1/0
  clock source internal
  framing sdh
  au 1
  mode c12-e1
  width 1
  root
 controller e1 0/1/1/0/0/1/1
  channel-group 0
   timeslots 1-12
   show configuration
```

```
  root
 interface serial 0/1/1/0/1/1:0
 encapsulation ppp
 ip address 10.10.10.10 255.255.255.255
 no shutdown
 commit
show controllers sonet 0/1/1/0
```

## Channelized SDH AU-4 Configuration: Examples

This section includes the following configuration examples

## Channelized SDH AU-4 to TUG-3 and Clear Channel T3/E3: Examples

This example shows SDH AU-4 channelization to TUG-3 and clear channel T3:

```
configure
 controller sonet 0/4/0/0
  framing sdh
  au 1
  width 3
  mode tug3
  tug3 1
   mode t3
   root
 controller t3 0/4/0/0/1/1
  mode serial
  commit
```

This example shows SDH AU-4 channelization to TUG-3 and clear channel E3:

```
configure
 controller sonet 0/4/0/0
  framing sdh
  au 1
  width 3
  mode tug3
  tug3 1
   mode e3
   root
 controller e3 0/4/0/0/1/1
  mode serial
  commit
```

## Channelized SDH AU-4 to TUG-3, TUG-2, and T1/E1 and NxDS0: Examples

**Note** Channelization to T1/E1 and NxDS0s is not supported on the 1-Port Channelized OC-48/STM-16 SPA.

The following example shows SDH AU-4 configuration with unframed E1 controllers and serial interfaces:

```
configure
 controller sonet 0/1/2/0
  framing sdh
  au 1
  width 3
  mode tug3
```

```
  tug3 1
   mode c12-e1
!
  tug3 2
   mode c12-e1
!
  tug3 3
   mode c12-e1
!
controller E1 0/1/2/0/1/1/1/1
framing unframed
!
controller E1 0/1/2/0/1/1/1/2
framing unframed
!
controller E1 0/1/2/0/1/1/1/3
framing unframed
!
interface Serial0/1/2/0/1/1/1/1:0
encapsulation ppp
multilink
  group 1
!
interface Serial0/1/2/0/1/1/1/2:0
encapsulation ppp
multilink
  group 1
!
!
interface Serial0/1/2/0/1/1/1/3:0
encapsulation ppp
multilink
  group 1
!
```

The following example shows SDH AU-4 configuration with E1 controller channel groups and serial interfaces:

```
configure
 controller SONET0/3/2/0
   framing sdh
   au 1
   width 3
   mode tug3
   tug3 1
   mode c12-e1
!
   tug3 2
   mode c12-e1
!
   tug3 3
   mode c12-e1
!
controller E1 0/3/2/0/1/1/1/1
 framing crc4
 channel-group 0
  timeslots 1-4
!
controller E1 0/3/2/0/1/1/3/1
 framing crc4
 channel-group 0
  timeslots 1-31
!
controller E1 0/3/2/0/1/1/1/2
 framing crc4
```

```
 channel-group 0
  timeslots 1-31
!
controller E1 0/3/2/0/1/2/7/3
 framing crc4
 channel-group 0
  timeslots 1-5
!
 channel-group 1
  timeslots 6-31
!
interface Serial0/3/2/0/1/1/1/1:0
 encapsulation frame-relay IETF
 frame-relay lmi-type ansi
 frame-relay intf-type dce
!
interface Serial0/3/2/0/1/1/1/1:0.1 point-to-point
 ipv4 address 192.168.200.2 255.255.255.252
 ipv4 verify unicast source reachable-via rx
 pvc 100
  encap ietf
!
interface Serial0/3/2/0/1/1/3/1:0
 encapsulation ppp
 multilink
  group 1
!
interface Serial0/3/2/0/1/1/1/2:0
 encapsulation ppp
 multilink
  group 1
```

CHAPTER 12

# Configuring Circuit Emulation over Packet

This module describes the configuration of Circuit Emulation over Packet (CEoP) shared port adapters (SPAs) on the Cisco ASR 9000 Series Aggregation Services Routers.

### Feature History for Configuring CEoP on Cisco ASR 9000 Series Router

| Release | Modification |
|---|---|
| Release 4.2.0 | • Support for Circuit Emulation Service over Packet Switched Network was added in this SPA:<br>  • Cisco 1-port Channelized OC3/STM-1 SPA (SPA-1CHOC3-CE-ATM) |
| Release 4.3.0 | • Support for Circuit Emulation Service over Packet Switched Network was added in these SPAs:<br>  • Cisco 24-Port Channelized T1/E1 Circuit Emulation and Channelized ATM SPA (SPA-24CHT1-CE-ATM )<br>  • Cisco 2-Port Channelized T3/E3 Circuit Emulation and Channelized ATM SPA (SPA-2CHT3-CE-ATM) |


- Configuring Circuit Emulation over Packet, on page 440
- Prerequisites for Configuration, on page 440
- Overview of Circuit Emulation over Packet Service, on page 441
- Information About Configuring CEoP Channelized SONET/SDH, on page 442
- Clock Distribution, on page 446
- How to implement CEM, on page 448
- Configuration Examples for CEM, on page 473

# Configuring Circuit Emulation over Packet

This module describes the configuration of Circuit Emulation over Packet (CEoP) shared port adapters (SPAs) on the Cisco ASR 9000 Series Aggregation Services Routers.

**Feature History for Configuring CEoP on Cisco ASR 9000 Series Router**

| Release | Modification |
|---|---|
| Release 4.2.0 | • Support for Circuit Emulation Service over Packet Switched Network was added in this SPA:<br>  • Cisco 1-port Channelized OC3/STM-1 SPA (SPA-1CHOC3-CE-ATM) |
| Release 4.3.0 | • Support for Circuit Emulation Service over Packet Switched Network was added in these SPAs:<br>  • Cisco 24-Port Channelized T1/E1 Circuit Emulation and Channelized ATM SPA (SPA-24CHT1-CE-ATM )<br>  • Cisco 2-Port Channelized T3/E3 Circuit Emulation and Channelized ATM SPA (SPA-2CHT3-CE-ATM) |

# Prerequisites for Configuration

You must be in a user group associated with a task group that includes the proper task IDs. The command reference guides include the task IDs required for each command. If you suspect user group assignment is preventing you from using a command, contact your AAA administrator for assistance.

Before configuring the Circuit Emulation over Packet (CEoP) service on your router, ensure that these conditions are met:

- You must have one of these SPAs installed in your chassis:
  - Cisco 2-Port Channelized T3/E3 Circuit Emulation and Channelized ATM SPA
  - Cisco 24-Port Channelized T1/E1 Circuit Emulation and Channelized ATM SPA
  - Cisco 1-port Channelized OC3/STM-1 Circuit Emulation and ATM SPA
- You should know how to apply and specify the SONET controller name and *interface-path-id* with the generalized notation *rack/slot/module/port*. The SONET controller name and *interface-path-id* are required with the **controller sonet** command.

- You should know how to apply and specify the T3/E3 and T1/E1 controller name and *interface-path-id* with the generalized notation *rack/slot/module/port*. The T3/E3, T1/E1 controller name and *interface-path-id* are required with the **controller {T3|E3|T1|E1}** command.

# Overview of Circuit Emulation over Packet Service

Circuit Emulation over Packet (CEoP) is a way to carry TDM circuits over packet switched network. Circuit Emulation over Packet is an imitation of a physical connection. The goal of CEoP is to replace leased lines and legacy TDM networks. This feature allows network administrators to use their existing IP or MPLS network to provide leased-line emulation services or to carry data streams or protocols that do not meet the format requirements of other multiservice platform interfaces. CEoP puts TDM bits into packets, encapsulates them into an appropriate header and then sends that through PSN. The receiver side of CEoP restores the TDM bit stream from packets.

CEoP SPAs are half-height (HH) Shared Port Adapters (SPA) and the CEoP SPA family consists of 24xT1/E1/J1, 2xT3/E3, and 1xOC3/STM1 unstructured and structured (NxDS0) quarter rate, half height SPAs. The CEoP SPAs provide bit-transparent data transport that is completely protocol independent.

CEoP has two major modes:

- Unstructured mode is called SAToP (Structure Agnostic TDM over Packet) — SAToP does not look what is inside the incoming data and considers it as a pure bit stream.
- Structured mode is named CESoPSN (Circuit Emulation Service over Packet Switched Network) — CESoPSN is aware of the structure of the incoming TDM bit stream at DS0 level.

CESoPSN and SAToP can use MPLS, UDP/IP, and L2TPv3 for the underlying transport mechanism.

**Note** The Cisco IOS XR Release 4.2.x supports only MPLS transport mechanism.

These SPAs are the first Cisco router interfaces designed to meet the emerging standards for Circuit Emulation Services over Packet Switched Network (CESoPSN) and Structure-Agnostic Transport over Packet (SAToP) transport.

In SAToP mode, these SPAs do not assume that data has any predefined format or structure. They simply regard the data as an arbitrary bit stream. All data bits are simply transported to a defined destination encapsulated in IP/MPLS packets. In CESoPSN mode the carrier has defined format. The SPAs support a full range of E1 and T1 framing. CESoPSN applications can save utilized bandwidth by selecting only valid timeslots for transmission. Some primary applications include:

- Transporting 2G and 3G network traffic over packet networks, for mobile operators. Mobile service providers are implementing high-speed data networks with HSDPA to support new revenue-generating services. The SPA is uniquely positioned for multigenerational migration of mobile networks (2G and 3G), simultaneously carrying TDM and ATM traffic over IP/MPLS networks. This technology provides a mechanism to enable IP/MPLS to the cell site, which can eventually be in place to transport the mobile traffic over IP from end to end.
- T3/E3 circuit emulation for leased-line replacement.
- T1/E1 circuit emulation for leased-line replacement.

- PBX to PBX connectivity over PSN.
- High density SS7 backhaul over IP/MPLS.
- Inter-MSC connectivity.
- Preencrypted data for government, defense, or other high-security applications.
- Proprietary synchronous or asynchronous data protocols used in transportation, utilities, and other industries.
- Leased-line emulation service offerings in metropolitan (metro) Ethernet or WAN service provider environments.

For more information on Circuit Emulation service concepts, configuration, and example, see the *Implementing Point to Point Layer 2 Services* module in the *Cisco ASR 9000 Series Aggregation Services Router L2VPN and Ethernet Services Configuration Guide*.

# Information About Configuring CEoP Channelized SONET/SDH

To configure the Circuit Emulation over Packet Channelized SONET/SDH, you must understand the following concepts:

## Channelized SONET and SDH Overview

Synchronous Optical Network (SONET) is an American National Standards Institute (ANSI) specification format used in transporting digital telecommunications services over optical fiber.

Channelized SONET provides the ability to transport SONET frames across multiplexed T3/E3 and virtual tributary group (VTG) channels.

SONET uses Synchronous Transport Signal (STS) framing. An STS is the electrical equivalent to an optical carrier 1 (OC-1).

A channelized SONET interface is a composite of STS streams, which are maintained as independent frames with unique payload pointers. The frames are multiplexed before transmission.

When a line is channelized, it is logically divided into smaller bandwidth channels called *paths*. These paths carry the SONET payload. The sum of the bandwidth on all paths cannot exceed the line bandwidth.

When a line is not channelized, it is called *clear channel*, and the full bandwidth of the line is dedicated to a single channel that carries broadband services.

The T3/E3 channels can be channelized into T1s, and the T1s can be channelized further into DS0 time slots.

Channelizing a SONET line consists of two primary processes:

- Configuring the controller
- Configuring the interface into channelized paths

You configure the controller first by setting the mode of the STS path.

When the mode is specified, the respective controller is created, and the remainder of the configuration is applied on that controller. For example, mode T3 creates a T3 controller. The T3 controller can then be

configured to a serial channel, or it can be further channelized to carry T1s, and those T1s can be configured to serial interfaces.

Depending on the support for your installed SPA, each STS path can be independently configured into T3s, E3s, or VTGs, and so on.

The following level of SONET channelization modes are supported in CEoP SPA:

OC3->STS-1->VTG-> VT1.5 -> Unframed T1

OC3->STS-1->VTG-> VT1.5 -> T1 -> DS0

This figure shows the VTG paths that can be configured.

**Note** Only VTG paths are supported on the Cisco 1-Port Channelized OC-3/STM-1 SPA on the Cisco ASR 9000 Series Router.

***Figure 40: SONET VTG Channelized Paths***

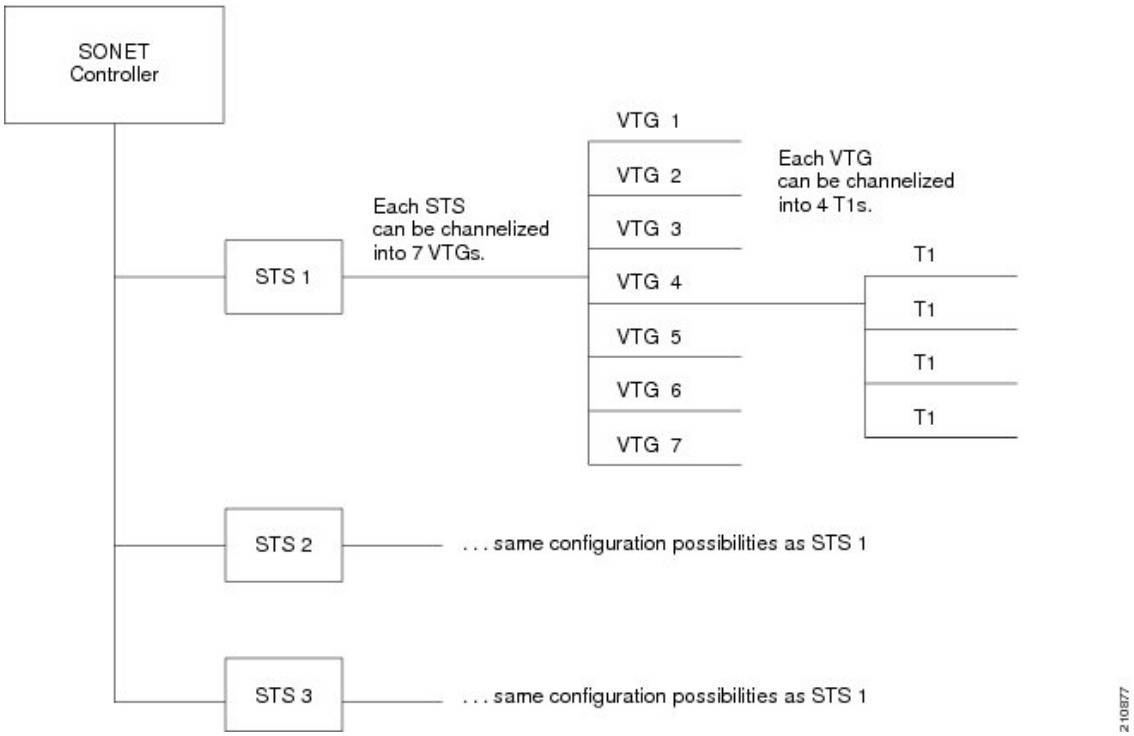


Synchronous Digital Hierarchy (SDH) is the international equivalent of SONET.

SDH uses Synchronous Transport Mode (STM) framing. An STM-1 is the electrical equivalent to 3 optical carrier 1s (OC-1s). A Synchronous Transport Module (STM) signal is the Synchronous Digital Hierarchy (SDH) equivalent of the SONET STS, but the numbers are different for each bandwidth. In this guide, the STM term refers to both path widths and optical line rates. The paths within an STM signals are called administrative units (AUs).

A summary of the basic terminology differences between SONET and SDH is as follows:

- SONET STS is equivalent to SDH administrative unit (AU)

- SONET VT is equivalent to SDH tributary unit (TU)
- SDH basic building blocks are STM-1 (equivalent to STS-3) and STM-0 (equivalent to STS-1)

An administrative unit (AU) is the information structure that provides adaptation between the higher-order path layer and the multiplex section layer. It consists of an information payload (the higher-order virtual container) and an administrative unit pointer, which indicates the offset of the payload frame start relative to the multiplex section frame start.

An AU can be channelized into tributary units (TUs) and tributary unit groups (TUGs).

An administrative unit 3 (AU-3) consists of one STM-1.

An administrative unit group (AUG) consists of one or more administrative units occupying fixed, defined positions in an STM payload.

This table shows the commonly used notations and terms in SONET standards and their SDH equivalents.

***Table 11: SONET and SDH Terminology Equivalencies***

| SONET Term | SDH Term |
|---|---|
| SONET | SDH |
| STS-3c | AU-4 |
| STS-1 | AU-3 |
| VT | TU |
| SPE | VC |
| Section | Regenerator Section |
| Line | Multiplex Section |
| Path | Path |

The following levels of SDH channelization are supported on the CEoP SPA:

- For E1 :
  - STM1-> AU-4 -> TUG-3 -> TUG-2 ->VC12-> Unframed E1
  - STM1-> AU-4 -> TUG-3 -> TUG-2 ->VC12-> E1 -> DS0
- For T1 :
  - STM1-> AU-3-> TUG-2 -> VC11->Unframed T1
  - STM1-> AU-3-> TUG-2 -> VC11->T1 -> DS0

This figure shows an example of SDH AU-3 paths that can be configured on the CEoP SPA.

*Figure 41: SDH AU3 Paths*

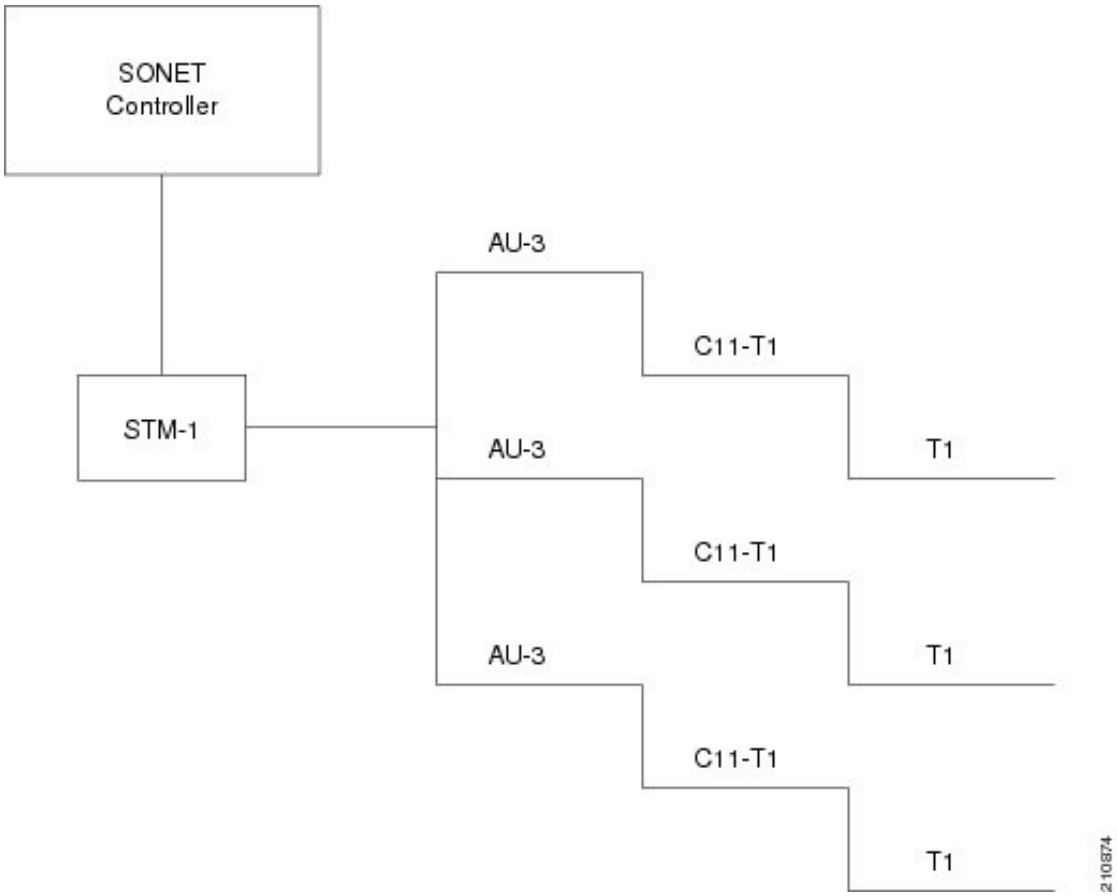


This figure shows the SDH AU4 paths that can be configured on the CEoP SPA.

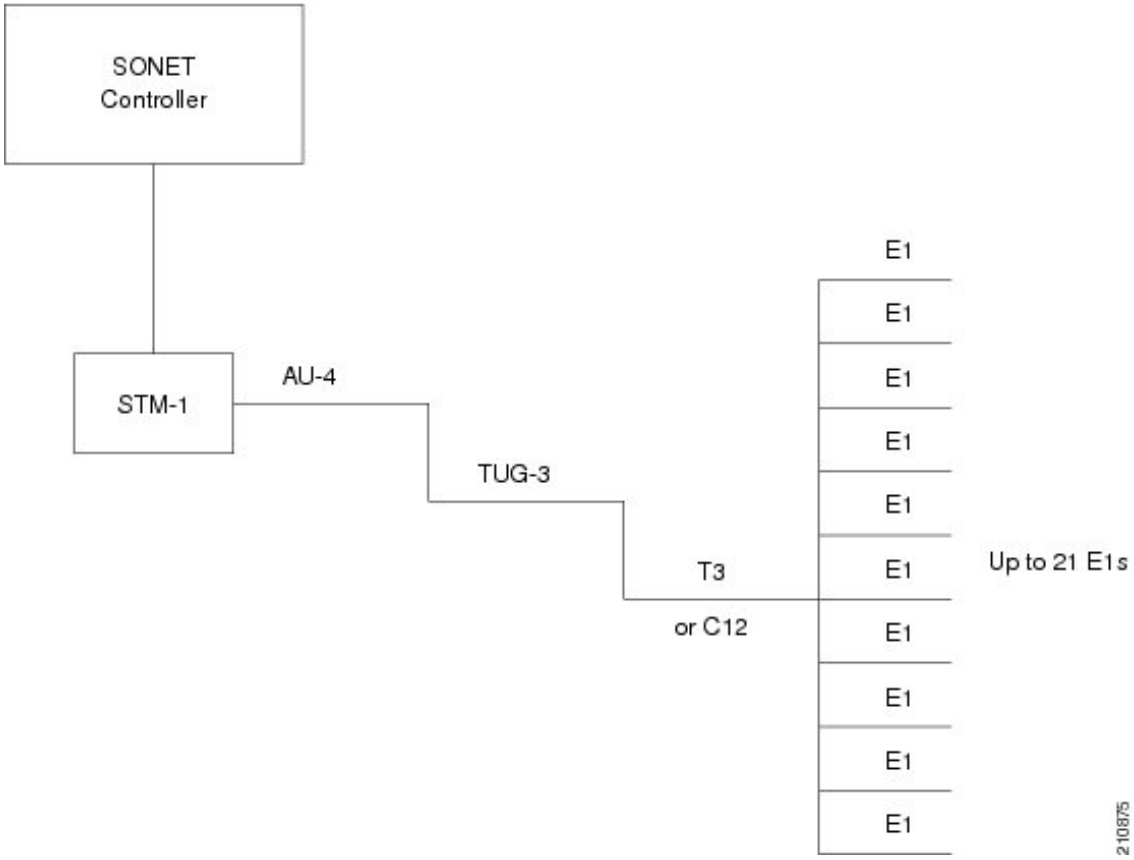


## Default Configuration Values for Channelized SONET/SDH

This Table describes the default configuration parameters that are present on the Channelized SONET/SDH.

***Table 12: SONET/SDH Controller Default Configuration Values***

| Parameter | Default Value | Configuration File Entry |
|---|---|---|
| Clock source | line | **clock source** {**internal** \| **line**} |
| SONET framing | sonet | **hw-module sub-slot** *node-id* **cardtype {sonet \| sdh}** |

# Clock Distribution

Clocking distribution in the CEoP SPA can be done in these ways:

- Synchronous Clocking — With synchronous clocking, TDM lines on source and destination are synchronized to the same clock delivered by some means of physical clock distribution (SONET/SDH, BITS, GPS, and so on). The clock to the particular TDM line can be delivered from
  - Line: the transmit clock is from the receiver of the same physical line

- Internal: the transmit clock is taken from line card and can be derived either from an internal free running oscillator or from another physical line
- Recovered: In-band pseudowire-based activeclock recovery on a CEM interface which is used to drive the transmit clock.

The number of recovered clocks that can be configured for CEoP SPA are:

- Cisco 24-Port Channelized T1/E1 Circuit Emulation and Channelized ATM SPA : 24 clocks for each SPA.
- Cisco 2-Port Channelized T3/E3 Circuit Emulation and Channelized ATM SPA : 10 clocks for each SPA in the T1/E1 mode and 2 clocks for each SPA in the T3/E3 mode.
- Cisco 1-port Channelized OC3/STM-1 Circuit Emulation and Channelized ATM SPA : 10 clocks per SPA in the T1/E1 mode.
- Adaptive Clocking — Adaptive clocking is used when the routers do not have a common clock source. See this figure. The clock is derived based on packet arrival rates. Two major types of adaptive clock recovery algorithms are:
  - Based on dejitter buffer fill level
  - Based on packet arrival rate

The clock quality depends on packet size, has less tolerance to packet loss/corruption and introduces unnecessary delay in order to have sufficient number of packets in the buffer for clock recovery. The dejitter buffer size determines the ability of the emulated circuit to tolerate network jitter. The dejitter buffer in CEoP software is configurable up to a maximum of 500 milliseconds.

**Note** The CEoP SPA hardware supports only the packet arrival rate algorithm.

***Figure 42: Adaptive Clock Recovery***

- Differential clocking — Differential clocking is used when the cell site and aggregation routers have a common clock source but TDM lines are clocked by a different source. The TDM clocks are derived from differential information in the RTP header of the packet with respect to the common clock. Differential clock recovery is based on time stamps received in RTP header. On the reference clock side, the difference of TDM clock and network clock is recorded into RTP header. On the subordinate clock side, these timestamps are read from RTP header, the clock recovery is done and this clock is used for synchronization. See Figure 5.

**Note** The Cisco 1-port Channelized OC3/STM-1 CEoP SPA hardware can recover only a maximum of ten unique clocks in as many CEM interfaces. The CEM interfaces where clock recovery is configured must be on unique T1s.

For information on CEM configuration and commands, see *Implementing Point to Point Layer 2 Services module* in the *Cisco ASR 9000 Series Aggregation Services Router L2VPN and Ethernet Services Configuration*

*Guide* and *Cisco ASR 9000 Series Aggregation Services Router L2VPN and Ethernet Services Command Reference*.

For a sample CEM interface configuration, refer Circuit Emulation Interface Configuration: Examples.

# How to implement CEM

This section contains the following procedures:

## Configuring SONET VT1.5-Mapped T1 Channels and Creating CEM Interface

In the case of Cisco 1-port Channelized OC3/STM-1 CEoP SPA, the STS stream can be channelized into the VT1.5 mapped T1 channel.

This task explains how to configure a SONET line into VT-mapped T1 Channels.

### Before you begin

None.

**Restrictions**

Channelized SONET STS stream with VT1.5-T1 mapping is supported on the following SPA:

- Cisco 1-Port Channelized OC-3/STM-1 SPA

### SUMMARY STEPS

1. **configure**
2. **hw-module subslot** *node-id* **cardtype {sonet| sdh}**
3. **commit**
4. **controller sonet** *interface-path-id*
5. **sts** *number*
6. **mode** *mode*
7. **root**
8. **controller t1** *interface-path-id*
9. **cem-group unframed**
10. **controller t1** *interface-path-id*
11. **cem-group framed** *group-number* **timeslots** *range1-range2*
12. **no shutdown**
13. **end** or **commit**
14. **show runn interface cem** *interface-path-id*

### DETAILED STEPS

| | Command or Action | Purpose |
|---|---|---|
| **Step 1** | **configure**<br>**Example:** | Enters global configuration mode. |

| | Command or Action | Purpose |
|---|---|---|
| | `RP/0/RSP0/CPU0:router# configure` | |
| **Step 2** | **hw-module subslot** *node-id* **cardtype {sonet\| sdh}**<br>**Example:**<br>`RP/0/RSP0/CPU0:router(config-sonet)# hw-module subslot 0/3/0 sonet` | Configures the controller for SONET framing.<br>SONET framing (**sonet**) is the default. Whenever there is a change in framing mode (sonet/sdh), the SPA will be reloaded automatically. Reload will happen only when all the CEM Interface, T1 Controller and Sonet Controller configurations are removed completely. This is not applicable when you configure the first time because T1 controller and interface configurations would not exist.<br>This configuration is mandatory for CEoP SPA to work normally in one of the framing modes. When you configure for the first time, it will not cause a SPA reload, if the cardtype is set to Sonet. |
| **Step 3** | **commit** | Use the **commit** command to save the configuration changes to the running configuration file and remain within the configuration session. |
| **Step 4** | **controller sonet** *interface-path-id* | Enters controller configuration submode and specifies the SONET controller name and instance identifier with the *rack/slot/module/port/controllerName* notation. |
| **Step 5** | **sts** *number*<br>**Example:**<br>`RP/0/RSP0/CPU0:router(config-sonet)# sts 1` | Configures the STS stream specified by *number*. The range is from1 to 3. |
| **Step 6** | **mode** *mode*<br>**Example:**<br>`RP/0/RSP0/CPU0:router(config-stsPath)# mode t1` | Sets the mode of interface at the STS level. The possible modes are:<br>• vt15-t1—SONET path carrying virtual tributary 1.5 T1s (VT15 T1) |
| **Step 7** | **root**<br>**Example:**<br>`RP/0/RSP0/CPU0:router(config-stsPath)# root` | Exits to global configuration mode. Go to step 7, if you want to create an structure agnostic CEM interface. Go to step 9, if you want to create a structure aware CEM interface. |
| **Step 8** | **controller t1** *interface-path-id*<br>**Example:**<br>`RP/0/RSP0/CPU0:router(config)# controller t1 0/0/1/0/1/4/1` | Enters T1 controller configuration submode and specifies the T1 controller name and *interface-path-id* with the *rack/slot/module/port/sts-num/vtg-num/T1-num* notation. |
| **Step 9** | **cem-group unframed**<br>**Example:** | Creates an structure agnostic CEM interface. |

| | Command or Action | Purpose |
|---|---|---|
| | `RP/0/RSP0/CPU0:router(config)# cem-group unframed` | |
| **Step 10** | **controller t1** *interface-path-id*<br>**Example:**<br>`RP/0/RSP0/CPU0:router(config)# controller t1 0/0/1/0/1/5/1` | Enters T1 controller configuration submode and specifies the T1 controller name and *interface-path-id* with the *rack/slot/module/port/sts-num/vtg-num/T1-num* notation. |
| **Step 11** | **cem-group framed** *group-number* **timeslots** *range1-range2*<br>**Example:**<br>`RP/0/RSP0/CPU0:router(config)# cem-group framed 0 timeslots 1` | Creates an structure aware CEM interface. The **timeslots** keyword specifies the time slots for the interface by range with the *range1-range2* notation. |
| **Step 12** | **no shutdown**<br>**Example:**<br>`RP/0/RSP0/CPU0:router(config-if)# no shutdown` | Removes the shutdown configuration.<br>**Note** • Removal of the shutdown configuration eliminates the forced administrative down on the interface, enabling it to move to an up or down state (assuming that the parent SONET layer is not configured administratively down). |
| **Step 13** | **end** or **commit**<br>**Example:**<br>`RP/0/0RSP0/CPU0:router(config-sonet)# end`<br>or<br>`RP/0/RSP0/CPU0:router(config-sonet)# commit` | Saves configuration changes.<br>• When you issue the **end** command, the system prompts you to commit changes:<br>`Uncommitted changes found, commit them before exiting(yes/no/cancel)? [cancel]:`<br>• Entering **yes** saves configuration changes to the running configuration file, exits the configuration session, and returns the router to EXEC mode.<br>• Entering **no** exits the configuration session and returns the router to EXEC mode without committing the configuration changes.<br>• Entering **cancel** leaves the router in the current configuration session without exiting or committing the configuration changes.<br>• Use the **commit** command to save the configuration changes to the running configuration file and remain within the configuration session. |

| | Command or Action | Purpose |
|---|---|---|
| **Step 14** | **show runn interface cem** *interface-path-id*<br>**Example:**<br>`RP/0/RSP0/CPU0:router# show runn interface cem 0/0/2/0/1/1/1/1:1` | Verifies the CEM interface configuration. |

# Configuring SDH AU-3 Mapped to C11-T1 or C12-E1

This section includes the following tasks:

## Configuring SDH AU-3 Mapped to C11-T1 and Creating CEM Interface

This task explains how to configure SDH AU-3 with c11-t1 mapping.

### Before you begin

- You should know how to configure the SONET/SDH controller.

### Restrictions

Channelized SDH AU-3 with c11-t1 mapping is supported on this SPA:

- Cisco 1-Port Channelized OC-3/STM-1 SPA

### SUMMARY STEPS

1. **configure**
2. **hw-module sub-slot** *node-id* **cardtype** *type*
3. **commit**
4. **controller sonet** *interface-path-id*
5. **au** *number*
6. **mode** *mode*
7. **root**
8. **controller t1** *interface-path-id*
9. **cem-group unframed**
10. **controller t1** *interface-path-id*
11. **cem-group framed** *group-number* timeslots *range1-range2*
12. **no shutdown**
13. **end** or **commit**
14. **show runn interface cem** *interface-path-id*

### DETAILED STEPS

| | Command or Action | Purpose |
|---|---|---|
| **Step 1** | **configure**<br>**Example:** | Enters global configuration mode. |

| | Command or Action | Purpose |
|---|---|---|
| | `RP/0/RSP0/CPU0:router# configure` | |
| **Step 2** | **hw-module sub-slot** *node-id* **cardtype** *type*<br>**Example:**<br>`RP/0/RSP0/CPU0:router(config-sonet)# hw-module sub-slot <> cardtype sdh` | Configures the controller for Synchronous Digital Hierarchy (SDH) framing. The **hw-module subslot** *node-id* **cardtype** *type* command configures the SPA to function in sonet/sdh mode.<br>This command when committed results in automatic reload of SPA. Reload happens only when all the CEM interface, T1 Controller and Sonet Controller configurations are removed completely. This is not applicable when you configure the first time because T1 controller and interface configurations would not exist.<br>This configuration is mandatory for CEoP SPA to work normally in one of the framing modes. SONET framing (**sonet**) is the default. |
| **Step 3** | **commit** | Use the **commit** command to save the configuration changes to the running configuration file and remain within the configuration session. |
| **Step 4** | **controller sonet** *interface-path-id* | Enters controller configuration submode and specifies the SDH controller name and instance identifier with the *rack/slot/module/port/controllerName* notation. |
| **Step 5** | **au** *number*<br>**Example:**<br>`RP/0/RSP0/CPU0:router(config-sonet)# au 1` | Specifies the administrative unit (AU) group and enters AU path configuration mode. For AU-3, the valid range is:<br>• 1 to 3—1-Port Channelized OC-3/STM-1 SPA<br>**Note** • The **au** command does not specify the AU type. It specifies the number of the AU group for the AU type that you want to configure. The range for the AU command varies based on whether you are configuring AU-3 or AU-4. |
| **Step 6** | **mode** *mode*<br>**Example:**<br>`RP/0/RSP0/CPU0:router(config-auPath)# mode c11-t1` | Sets the mode of interface at the AU level. AU-3 paths can be mapped to c11-t1 on supported SPAs. |
| **Step 7** | **root**<br>**Example:**<br>`RP/0/RSP0/CPU0:router(config-auPath)# root` | Exits to global configuration mode. |

| | Command or Action | Purpose |
|---|---|---|
| **Step 8** | **controller t1** *interface-path-id*<br>**Example:**<br>`RP/0/RSP0/CPU0:router(config)# controller T1 0/0/2/0/1/1/4` | Enters T1 controller configuration submode and specifies the T1 controller name and *interface-path-id* with the *rack/slot/module/port/auNum/t1Num* notation. |
| **Step 9** | **cem-group unframed**<br>**Example:**<br>`RP/0/RSP0/CPU0:router(config)# cem-group unframed` | Creates an structure agnostic CEM interface. |
| **Step 10** | **controller t1** *interface-path-id*<br>**Example:**<br>`RP/0/RSP0/CPU0:router(config)# controller t1 0/0/2/0/1/1/7` | Enters T1 controller configuration submode and specifies the T1 controller name and *interface-path-id* with the *rack/slot/module/port/auNum/t1Num* notation. |
| **Step 11** | **cem-group framed** *group-number* timeslots *range1-range2*<br>**Example:**<br>`RP/0/RSP0/CPU0:router(config)# cem-group framed 1 timeslots 2-3` | Creates an structure aware CEM interface. The **timeslots** keyword specifies the time slots for the interface by range with the *range1-range2* notation. |
| **Step 12** | **no shutdown**<br>**Example:**<br>`RP/0/RSP0/CPU0:router(config-if)# no shutdown` | Removes the shutdown configuration.<br>**Note** • Removal of the shutdown configuration eliminates the forced administrative down on the interface, enabling it to move to an up or down state (assuming that the parent SONET layer is not configured administratively down). |
| **Step 13** | **end** or **commit**<br>**Example:**<br>`RP/0/RSP0/CPU0:router(config-sonet)# end`<br>or<br>`RP/0/RSP0/CPU0:router(config-sonet)# commit` | Saves configuration changes.<br>• When you issue the **end** command, the system prompts you to commit changes:<br>`Uncommitted changes found, commit them before exiting(yes/no/cancel)? [cancel]:`<br>• Entering **yes** saves configuration changes to the running configuration file, exits the configuration session, and returns the router to EXEC mode.<br>• Entering **no** exits the configuration session and returns the router to EXEC mode without committing the configuration changes. |

| | Command or Action | Purpose |
|---|---|---|
| | | • Entering **cancel** leaves the router in the current configuration session without exiting or committing the configuration changes.<br>• Use the **commit** command to save the configuration changes to the running configuration file and remain within the configuration session. |
| **Step 14** | **show runn interface cem** *interface-path-id*<br>**Example:**<br>`RP/0/RSP0/CPU0:router# show runn interface cem 0/0/2/0/1/1/1/1:1` | Verifies the CEM interface configuration. |

## Configuring SDH AU-3 Mapped to C12-E1 and Creating CEM Interface

This task explains how to configure SDH AU-3 with c12-e1 mapping.

### Before you begin

- You should know how to configure the SONET/SDH controller.

### Restrictions

Channelized SDH AU-3 with c12-e1 mapping is supported on this SPA:

- Cisco 1-Port Channelized OC-3/STM-1 SPA

### SUMMARY STEPS

1. **configure**
2. **hw-module sub-slot** *node-id* **cardtype** *type*
3. **commit**
4. **controller sonet** *interface-path-id*
5. **au** *number*
6. **mode tug3**
7. **width** *number*
8. **tug3** *number*
9. **mode** *mode*
10. **root**
11. **controller e1** *interface-path-id*
12. **cem-group unframed**
13. **controller e1** *interface-path-id*
14. **cem-group framed** *group-number* **timeslots** *range1-range2*
15. **no shutdown**
16. **end** or **commit**

## DETAILED STEPS

| | Command or Action | Purpose |
|---|---|---|
| **Step 1** | **configure**<br>**Example:**<br>`RP/0/RSP0/CPU0:router# configure` | Enters global configuration mode. |
| **Step 2** | **hw-module sub-slot** *node-id* **cardtype** *type*<br>**Example:**<br>`RP/0/RSP0/CPU0:router(config-sonet)# hw-module sub-slot <> cardtype sdh` | Configures the controller framing for Synchronous Digital Hierarchy (SDH) framing. The **hw-module subslot** *node-id* **cardtype** *type* command configures the SPA to function in sonet/sdh mode. This command when committed results in automatic reload of SPA. Reload happens only when all the CEM interface, E1 Controller and Sonet Controller configurations are removed completely. |
| **Step 3** | **commit** | Use the **commit** command to save the configuration changes to the running configuration file and remain within the configuration session. |
| **Step 4** | **controller sonet** *interface-path-id* | Enters controller configuration submode and specifies the SDH controller name and instance identifier with the *rack/slot/module/port/controllerName* notation. |
| **Step 5** | **au** *number*<br>**Example:**<br>`RP/0/RSP0/CPU0:router(config-sonet)# au 1` | Specifies the administrative unit (AU) group and enters AU path configuration mode. For AU-3, the valid range is:<br>• 1 to 3—1-Port Channelized OC-3/STM-1 SPA<br>**Note** • The **au** command does not specify the AU type. It specifies the number of the AU group for the AU type that you want to configure. The range for the AU command varies based on whether you are configuring AU-3 or AU-4. |
| **Step 6** | **mode tug3**<br>**Example:**<br>`RP/0/RSP0/CPU0:router(config-auPath)# mode tug3` | Sets the mode of interface at the AU level. Currently only TUG3 is supported. |
| **Step 7** | **width** *number*<br>**Example:**<br>`RP/0/RSP0/CPU0:router(config-auPath)# width 3` | Configures the number of the AU streams. |
| **Step 8** | **tug3** *number*<br>**Example:** | Specifies the Tributary Unit Group (TUG) *number* and enters the config-tug3Path mode. The range is 1 to 3. |

| | Command or Action | Purpose |
|---|---|---|
| | `RP/0/RSP0/CPU0:router(config-auPath)#tug3 1` | |
| **Step 9** | **mode** *mode*<br>**Example:**<br>`RP/0/RSP0/CPU0:router(config-tug3Path)# mode c12-e1` | Sets the mode of interface at the tug3 level. The modes are:<br>• **c12-e1**—TUG-3 path carrying TU-12 to E1 |
| **Step 10** | **root**<br>**Example:**<br>`RP/0/RSP0/CPU0:router(config-auPath)# root` | Exits to global configuration mode. |
| **Step 11** | **controller e1** *interface-path-id*<br>**Example:**<br>`RP/0/RSP0/CPU0:router(config)# controller E1 0/0/2/0/1/1/1` | Enters E1 controller configuration submode and specifies the E1 controller name and *interface-path-id* with the *rack/slot/module/port/auNum/tugNum/t1Num* notation. |
| **Step 12** | **cem-group unframed**<br>**Example:**<br>`RP/0/RSP0/CPU0:router(config)# cem-group unframed` | Creates an structure agnostic CEM interface. |
| **Step 13** | **controller e1** *interface-path-id*<br>**Example:**<br>`RP/0/RSP0/CPU0:router(config)# controller E1 0/0/2/0/1/1/7` | Enters E1 controller configuration submode and specifies the E1 controller name and *interface-path-id* with the *rack/slot/module/port/auNum/tugNum/t1Num* notation. |
| **Step 14** | **cem-group framed** *group-number* **timeslots** *range1-range2*<br>**Example:**<br>`RP/0/RSP0/CPU0:router(config)# cem-group framed 0 timeslots 1` | Creates an structure aware CEM interface. |
| **Step 15** | **no shutdown**<br>**Example:**<br>`RP/0/RSP0/CPU0:router(config-if)# no shutdown` | Removes the shutdown configuration.<br>**Note** • Removal of the shutdown configuration eliminates the forced administrative down on the interface, enabling it to move to an up or down state (assuming that the parent SONET layer is not configured administratively down). |
| **Step 16** | **end** or **commit** | Saves configuration changes. |

| | Command or Action | Purpose |
|---|---|---|
| | **Example:**<br>`RP/0/RSP0/CPU0:router(config-sonet)# end`<br>or<br>`RP/0/RSP0/CPU0:router(config-sonet)# commit` | • When you issue the **end** command, the system prompts you to commit changes:<br>`Uncommitted changes found, commit them before exiting(yes/no/cancel)? [cancel]:`<br>• Entering **yes** saves configuration changes to the running configuration file, exits the configuration session, and returns the router to EXEC mode.<br>• Entering **no** exits the configuration session and returns the router to EXEC mode without committing the configuration changes.<br>• Entering **cancel** leaves the router in the current configuration session without exiting or committing the configuration changes.<br>• Use the **commit** command to save the configuration changes to the running configuration file and remain within the configuration session. |

# Configuring the Cisco 24-Port Channelized T1/E1 Circuit Emulation and Channelized ATM SPA and Creating CEM Interface

This task explains how to configure the Cisco 24-Port Channelized T1/E1 Circuit Emulation and Channelized ATM SPA.

## SUMMARY STEPS

1. **configure**
2. **hw-module subslot** *node-id* **cardtype {t1| e1}**
3. **controller t1|e1** *interface-path-id*
4. **cem-group unframed**
5. **controller t1|e1** *interface-path-id*
6. **cem-group framed** *group-number* **timeslots** *range1-range2*
7. **no shutdown**
8. **end** or **commit**
9. **show runn interface cem** *interface-path-id*

## DETAILED STEPS

| | Command or Action | Purpose |
|---|---|---|
| **Step 1** | **configure**<br>**Example:** | Enters global configuration mode. |

| | Command or Action | Purpose |
|---|---|---|
| | `RP/0/RSP0/CPU0:router# configure` | |
| **Step 2** | **hw-module subslot** *node-id* **cardtype {t1\| e1}**<br>**Example:**<br>`RP/0/RSP0/CPU0:router(config-t1)# hw-module subslot 0/3/0 cardtype t1` | The **hw-module subslot** *node-id* **cardtype** *type* command configures the SPA to function in t1/e1 mode.<br>Reload will happen only when all the CEM interface, T1 Controller configurations are removed completely. This is not applicable when you configure the first time because T1 controller and interface configurations would not exist. |
| **Step 3** | **controller t1\|e1** *interface-path-id*<br>**Example:**<br>`RP/0/RSP0/CPU0:router(config)# controller t1 0/0/1/0/1` | Enters T1 controller configuration submode and specifies the T1 controller name and *interface-path-id* with the *rack/slot/module/port/T1num* notation. |
| **Step 4** | **cem-group unframed**<br>**Example:**<br>`RP/0/RSP0/CPU0:router(config-t1)# cem-group unframed` | Creates an structure agnostic CEM interface. |
| **Step 5** | **controller t1\|e1** *interface-path-id*<br>**Example:**<br>`RP/0/RSP0/CPU0:router(config)# controller t1 0/0/1/0/1` | Enters T1 controller configuration submode and specifies the T1 controller name and *interface-path-id* with the *rack/slot/module/port/T1num* notation. |
| **Step 6** | **cem-group framed** *group-number* **timeslots** *range1-range2*<br>**Example:**<br>`RP/0/RSP0/CPU0:router(config-t1)# cem-group framed 0 timeslots 1` | Creates an structure aware CEM interface. The **timeslots** keyword specifies the time slots for the interface by range with the *range1-range2* notation. |
| **Step 7** | **no shutdown**<br>**Example:**<br>`RP/0/RSP0/CPU0:router(config-if)# no shutdown` | Removes the shutdown configuration.<br>**Note** • Removal of the shutdown configuration eliminates the forced administrative down on the interface, enabling it to move to an up or down state. |
| **Step 8** | **end** or **commit**<br>**Example:**<br>`RP/0/RSP0/CPU0:router(config-t1)# end`<br>or<br>`RP/0/RSP0/CPU0:router(config-t1)# commit` | Saves configuration changes.<br>• When you issue the **end** command, the system prompts you to commit changes:<br>`Uncommitted changes found, commit them before exiting(yes/no/cancel)? [cancel]:` |

| | Command or Action | Purpose |
|---|---|---|
| | | • Entering **yes** saves configuration changes to the running configuration file, exits the configuration session, and returns the router to EXEC mode.<br>• Entering **no** exits the configuration session and returns the router to EXEC mode without committing the configuration changes.<br>• Entering **cancel** leaves the router in the current configuration session without exiting or committing the configuration changes.<br>• Use the **commit** command to save the configuration changes to the running configuration file and remain within the configuration session. |
| **Step 9** | **show runn interface cem** *interface-path-id*<br>**Example:**<br>`RP/0/RSP0/CPU0:router# show runn interface cem 0/0/2/0/1:1` | Verifies the CEM interface configuration. |

# Configuring the Cisco 2-Port Channelized T3/E3 Circuit Emulation and Channelized ATM SPA and Creating CEM Interface

## T3/E3 Channelization Mode

This task explains how to configure the Cisco 2-Port Channelized T3/E3 Circuit Emulation and Channelized ATM SPA using T3 channelization.

**Note** The T3 channels can be channelized into T1s or E1s, and the T1s or E1s can be channelized further into DS0 time slots, on the Cisco 2-Port Channelized T3/E3 Circuit Emulation and Channelized ATM SPA.

### SUMMARY STEPS

1. **configure**
2. **hw-module subslot** *node-id* **cardtype {t3| e3}**
3. **commit**
4. **controller {t3|e3}** *interface-path-id*
5. **cem-group unframed**
6. **no shutdown**
7. **end** or **commit**
8. **show runn interface cem** *interface-path-id*

## DETAILED STEPS

| | Command or Action | Purpose |
|---|---|---|
| **Step 1** | **configure**<br>**Example:**<br>`RP/0/RSP0/CPU0:router# configure` | Enters global configuration mode. |
| **Step 2** | **hw-module subslot** *node-id* **cardtype {t3\| e3}**<br>**Example:**<br>`RP/0/RSP0/CPU0:router(config-t3)# hw-module subslot 0/3/0 cardtype t3` | The **hw-module subslot** *node-id* **cardtype** *type* command configures the SPA to function in t3/e3 mode.<br>Whenever there is a change in framing mode (t3/e3), the SPA will be reloaded automatically. Reload will happen only when all the CEM Interface, T3 Controller configurations are removed completely. This is not applicable when you configure the first time because T3 controller and interface configurations would not exist. |
| **Step 3** | **commit** | Use the **commit** command to save the configuration changes to the running configuration file and remain within the configuration session. |
| **Step 4** | **controller {t3\|e3}** *interface-path-id*<br>**Example:**<br>`RP/0/RSP0/CPU0:router(config)# controller t3 0/0/1/0/4` | Enters T3/E3 controller configuration submode and specifies the T3/E3 controller name and *interface-path-id* with the *rack/slot/module/port/T3Num* notation. |
| **Step 5** | **cem-group unframed**<br>**Example:**<br>`RP/0/RSP0/CPU0:router(config-t3)# cem-group unframed` | Creates an structure agnostic CEM interface. Only the unframed CEM interface is supported in this mode. |
| **Step 6** | **no shutdown**<br>**Example:**<br>`RP/0/RSP0/CPU0:router(config-if)# no shutdown` | Removes the shutdown configuration.<br>Removal of the shutdown configuration eliminates the forced administrative down on the interface, enabling it to move to an up or down state. |
| **Step 7** | **end** or **commit**<br>**Example:**<br>`RP/0/RSP0/CPU0:router(config-t3)# end`<br>or<br>`RP/0/RSP0/CPU0:router(config-t3)# commit` | Saves configuration changes.<br>• When you issue the **end** command, the system prompts you to commit changes:<br>`Uncommitted changes found, commit them before exiting(yes/no/cancel)? [cancel]:`<br>• Entering **yes** saves configuration changes to the running configuration file, exits the configuration session, and returns the router to EXEC mode. |

| | Command or Action | Purpose |
|---|---|---|
| | | • Entering **no** exits the configuration session and returns the router to EXEC mode without committing the configuration changes.<br>• Entering **cancel** leaves the router in the current configuration session without exiting or committing the configuration changes.<br>• Use the **commit** command to save the configuration changes to the running configuration file and remain within the configuration session. |
| **Step 8** | **show runn interface cem** *interface-path-id*<br>**Example:**<br>`RP/0/RSP0/CPU0:router# show runn interface cem 0/0/1/0/4:1` | Verifies the CEM interface configuration. |

## T1/E1 Channelization Mode

This task explains how to configure the Cisco 2-Port Channelized T3/E3 Circuit Emulation and Channelized ATM SPA using T1/E1 channelization.

### SUMMARY STEPS

1. **configure**
2. **hw-module subslot** *node-id* **cardtype {t3| e3}**
3. **commit**
4. **controller t3** *interface-path-id*
5. **mode {t1|e1}**
6. **controller t1** *interface-path-id*
7. **cem-group unframed**
8. **controller t1** *interface-path-id*
9. **cem-group framed** *group-number* **timeslots** *range1-range2*
10. **no shutdown**
11. **end** or **commit**
12. **show runn interface cem** *interface-path-id*

### DETAILED STEPS

| | Command or Action | Purpose |
|---|---|---|
| **Step 1** | **configure**<br>**Example:**<br>`RP/0/RSP0/CPU0:router# configure` | Enters global configuration mode. |

| | Command or Action | Purpose |
|---|---|---|
| **Step 2** | **hw-module subslot** *node-id* **cardtype {t3\| e3}**<br>**Example:**<br>`RP/0/RSP0/CPU0:router(config-sonet)# hw-module subslot 0/3/0 t3` | The **hw-module subslot** *node-id* **cardtype** *type* command configures the SPA to function in t3/e3 mode.<br>Whenever there is a change in framing mode (t3/e3), the SPA will be reloaded automatically. Reload will happen only when all the CEM Interface, T3 Controller configurations are removed completely. This is not applicable when you configure the first time because T3 controller and interface configurations would not exist. |
| **Step 3** | **commit** | Use the **commit** command to save the configuration changes to the running configuration file and remain within the configuration session. |
| **Step 4** | **controller t3** *interface-path-id*<br>**Example:**<br>`RP/0/RSP0/CPU0:router(config)# controller t3 0/0/1/0/4` | Enters T3 controller configuration submode and specifies the T3 controller name and *interface-path-id* with the *rack/slot/module/port/T3Num* notation. |
| **Step 5** | **mode {t1\|e1}** | Sets the mode of interface. The possible modes are T1 and E1 channelization mode. |
| **Step 6** | **controller t1** *interface-path-id*<br>**Example:**<br>`RP/0/RSP0/CPU0:router(config)# controller t1 0/0/1/0/4/1` | Enters T1 controller configuration submode and specifies the T1 controller name and *interface-path-id* with the *rack/slot/module/port/T3Num/T1num* notation. |
| **Step 7** | **cem-group unframed**<br>**Example:**<br>`RP/0/RSP0/CPU0:router(config-t1)# cem-group unframed` | Creates an structure agnostic CEM interface. |
| **Step 8** | **controller t1** *interface-path-id*<br>**Example:**<br>`RP/0/RSP0/CPU0:router(config)# controller t1 0/0/1/0/4/1` | Enters T1 controller configuration submode and specifies the T1 controller name and *interface-path-id* with the *rack/slot/module/port/T3Num/T1num* notation. |
| **Step 9** | **cem-group framed** *group-number* **timeslots** *range1-range2*<br>**Example:**<br>`RP/0/RSP0/CPU0:router(config-t1)# cem-group framed 0 timeslots 1` | Creates an structure aware CEM interface. The **timeslots** keyword specifies the time slots for the interface by range with the *range1-range2* notation. |
| **Step 10** | **no shutdown**<br>**Example:** | Removes the shutdown configuration. |

| | Command or Action | Purpose |
|---|---|---|
| | `RP/0/RSP0/CPU0:router(config-if)# no shutdown` | **Note** • Removal of the shutdown configuration eliminates the forced administrative down on the interface, enabling it to move to an up or down state. |
| **Step 11** | **end** or **commit**<br>**Example:**<br>`RP/0/RSP0/CPU0:router(config-t1)# end`<br>or<br>`RP/0/RSP0/CPU0:router(config-t1)# commit` | Saves configuration changes.<br>• When you issue the **end** command, the system prompts you to commit changes:<br>`Uncommitted changes found, commit them before exiting(yes/no/cancel)? [cancel]:`<br>• Entering **yes** saves configuration changes to the running configuration file, exits the configuration session, and returns the router to EXEC mode.<br>• Entering **no** exits the configuration session and returns the router to EXEC mode without committing the configuration changes.<br>• Entering **cancel** leaves the router in the current configuration session without exiting or committing the configuration changes.<br>• Use the **commit** command to save the configuration changes to the running configuration file and remain within the configuration session. |
| **Step 12** | **show runn interface cem** *interface-path-id*<br>**Example:**<br>`RP/0/RSP0/CPU0:router# show runn interface cem 0/0/2/0/1/1/1/1:1` | Verifies the CEM interface configuration. |

# Configuring CEM Interface

This section provides information about how to configure CEM. CEM provides a bridge between a time-division multiplexing (TDM) network and a packet network using Multiprotocol Label Switching (MPLS). The router encapsulates the TDM data in the MPLS packets and sends the data over a CEM pseudowire to the remote provider edge (PE) router.

The following sections describe how to configure CEM:

## Configuration Guidelines and Restrictions

All combinations of payload size and dejitter buffer size are not supported. If you apply an incompatible payload size or dejitter buffer configuration, the router rejects it and reverts to the previous configuration.

## Configuring a Global CEM Class

This task explains how to configure a global CEM class.

**Note** Any interface configuration would have higher precedence over configuration applied through attaching a CEM class. Also, CEM class attached to an interface would have higher precedence than CEM class attached to the parent controller. For example, if the dummy pattern value of *0xcf* is applied directly to an interface and then a CEM class which contains dummy pattern value of *0xaa* is attached to the same interface, then the dummy pattern value would be *0xcf*. The new configuration would not be applied until the dummy pattern value applied directly to the interface is removed.

### SUMMARY STEPS

1. **configure**
2. **cem class** *class-name*
3. **payload** *value*
4. **dejitter** *value*
5. **idle pattern** *value*
6. **dummy mode**
7. **dummy pattern** *value*
8. **end** or **commit**

### DETAILED STEPS

| | Command or Action | Purpose |
|---|---|---|
| **Step 1** | **configure**<br>**Example:**<br>`RP/0/RSP0/CPU0:router# configure` | Enters global configuration mode. |
| **Step 2** | **cem class** *class-name*<br>**Example:**<br>`RP/0/RSP0/CPU0:router(config)# cem class Default` | Creates a new CEM class. |
| **Step 3** | **payload** *value*<br>**Example:**<br>`RP/0/RSP0/CPU0:router(config-cem-class)# payload 512` | Enter the payload size for the CEM class. |
| **Step 4** | **dejitter** *value*<br>**Example:**<br>`RP/0/RSP0/CPU0:router(config-cem-class)# dejitter 10` | Enter the dejitter buffer size for the CEM class. |

| | Command or Action | Purpose |
|---|---|---|
| **Step 5** | **idle pattern** *value*<br>**Example:**<br>`RP/0/RSP0/CPU0:router(config-cem-class)# idle pattern 0x55` | Enter the idle pattern value for the CEM class. |
| **Step 6** | **dummy mode**<br>**Example:**<br>`RP/0/RSP0/CPU0:router(config-cem-class)# dummy mode last-frame` | Enter the dummy mode for the CEM class. The options are last-frame or user-defined. |
| **Step 7** | **dummy pattern** *value*<br>**Example:**<br>`RP/0/RSP0/CPU0:router(config-cem-class)# dummy pattern` | Enter the dummy pattern value for the CEM class. This value is applied only when the dummy mode is user-defined. |
| **Step 8** | **end** or **commit**<br>**Example:**<br>`RP/0/RSP0/CPU0:router(config-cem-class)# end`<br>or<br>`RP/0/RSP0/CPU0:router(config-cem-class)# commit` | Saves configuration changes.<br>• When you issue the **end** command, the system prompts you to commit changes:<br>`Uncommitted changes found, commit them before exiting(yes/no/cancel)? [cancel]:`<br>Entering **yes** saves configuration changes to the running configuration file, exits the configuration session, and returns the router to EXEC mode.<br>Entering **no** exits the configuration session and returns the router to EXEC mode without committing the configuration changes.<br>Entering **cancel** leaves the router in the current configuration session without exiting or committing the configuration changes.<br>• Use the **commit** command to save the configuration changes to the running configuration file and remain within the configuration session. |

## Attaching a CEM Class

This task explains how to attach a global CEM class.

**Note** You can attach a CEM class either to a CEM interface or to a T1/E1 controller.

## SUMMARY STEPS

1. **configure**
2. **interface cem** *interface-path-id*
3. (or)
4. **controller {t1|e1}** *interface-path-id*
5. **cem class-attach** *class-name*
6. **end** or **commit**

## DETAILED STEPS

| | Command or Action | Purpose |
|---|---|---|
| **Step 1** | **configure**<br>**Example:**<br>`RP/0/RSP0/CPU0:router# configure` | Enters global configuration mode. |
| **Step 2** | **interface cem** *interface-path-id* | |
| **Step 3** | (or) | |
| **Step 4** | **controller {t1\|e1}** *interface-path-id*<br>**Example:**<br>`RP/0/RSP0/CPU0:router(config)# controller t1 0/0/2/0/1/1` | Specifies the CEM interface or the T1/E1 controller. |
| **Step 5** | **cem class-attach** *class-name*<br>**Example:**<br>`RP/0/RSP0/CPU0:router(config)# cem class-attach Default` | Attaches the CEM class to an interface or controller. |
| **Step 6** | **end** or **commit**<br>**Example:**<br>`RP/0/RSP0/CPU0:router(config-cem-class)# end`<br>or<br>`RP/0/RSP0/CPU0:router(config-cem-class)# commit` | Saves configuration changes.<br>• When you issue the **end** command, the system prompts you to commit changes:<br>`Uncommitted changes found, commit them before exiting(yes/no/cancel)? [cancel]:`<br>• Entering **yes** saves configuration changes to the running configuration file, exits the configuration session, and returns the router to EXEC mode.<br>• Entering **no** exits the configuration session and returns the router to EXEC mode without committing the configuration changes.<br>• Entering **cancel** leaves the router in the current configuration session without exiting or committing the configuration changes. |

| | Command or Action | Purpose |
|---|---|---|
| | | • Use the **commit** command to save the configuration changes to the running configuration file and remain within the configuration session. |

## Configuring Payload Size

To specify the number of bytes encapsulated into a single IP packet, use the **cem payload** command. The size argument specifies the number of bytes in the payload of each packet. The range is from 32 to 1312 bytes.

Default payload sizes for an unstructured CEM channel are as follows:

- E1 = 256 bytes
- T1 = 192 bytes
- E3 = 1024 bytes
- T3 = 1024 bytes

Default payload sizes for a structured CEM channel depend on the number of time slots that constitute the channel. Payload (L in bytes), number of time slots (N), and packetization delay (D in milliseconds) have the following relationship: L = 8*N*D.

The default payload size is calculated using the packetization latency depending on the number of time slots the cem interface represents. The relationship between the number of time slots and the packetization latency is provided below:

- For N = 1, D is 8 milliseconds (with the corresponding packet payloadsize of 64 bytes)
- For 2 <=N <= 4, D is 4 milliseconds (with the corresponding packetpayload size of 32*N bytes)
- For N >= 5, D is 1 millisecond (with the corresponding packet payloadsize of 8*N octets).

Support of 5 ms packetization latency for N = 1 is recommended.

## Setting the Dejitter Buffer Size

To specify the size of the dejitter buffer used to compensate for the network filter, use the **cem dejitter** command. The configured dejitter buffer size is converted from milliseconds to packets and rounded up to the next integral number of packets. Use the size argument to specify the size of the buffer, in milliseconds. The range is from 1 to 500 ms. The following is an example:

Router(config-cem)# cem dejitter 5

The default dejitter buffer for a CEM channel, irrespective of CESoPSN or SAToP, is as follows:

- E1 = 16 milliseconds
- T1 = 16 milliseconds
- E3 = 5 milliseconds
- T3 = 5 milliseconds

**Note** Refer the T1/E1 SAToP lines:Payload and jitter limits table, the T3/E3 SAToP lines:Payload and jitter limits table, and the ICESoPSN DSo lines:Payload and jitter limits table for the relationship between payload and dejitter buffer on SAToP T1/E1, T3/E3, and CESoPSN lines. Configuration of payload and dejitter should be in accordance with the minimum and maximum values as mentioned in the table.

The maximum and minimum dejitter buffer value, that is the range is fixed for a given payload value.

## Setting an Idle Pattern

To specify an idle pattern, use the [no] **cem idle pattern pattern** command. The payload of each lost CESoPSN data packet must be replaced with the equivalent amount of the replacement data. The range for pattern is from 0x0 to 0xff; the default idle pattern is 0xff. This is an example:

Router(config-cem)# cem idle pattern 0xff

If the expected CEM packets are not received for a given CEM interface and are considered as being lost, then the CEoP SPA will play out the idle pattern towards the TDM attachment circuit in the respective timeslots configured in the CEM group.

## Enabling Dummy Mode

Dummy mode enables a bit pattern for filling in for lost or corrupted frames. To enable dummy mode, use the **cem dummy mode** [**last-frame** | **user-defined**] command. The default is **last-frame**. This is an example:

```
Router(config-cem)# cem dummy mode last-frame
```

When packets are lost due to misordering or where reordering of packets is not successful, the CEoP SPA will play out the Dummy pattern towards the TDM attachment circuit in respective timeslots configured in the CEM group.

## Setting a Dummy Pattern

If dummy mode is set to user-defined, you can use the **cem dummy-pattern** command to configure the dummy pattern. The range for pattern is from 0x0 to 0xff. The default dummy pattern is 0xff. This is an example:

```
Router(config-cem)# cem dummy-pattern 0xff
```

This Table shows the relationship between payload and dejitter for T1/E1 SAToP lines.

T1/E1 SAToP lines: Payload and Jitter Limits

***Table 13:***

| T1/E1 | Maximum Payload | Maximum Jitter | Minimum Jitter | Minimum Payload | Maximum Jitter | Minimun Jitter |
|---|---|---|---|---|---|---|
| T1 | 960 | 320 | 10 | 192 | 64 | 2 |
| E1 | 1280 | 320 | 10 | 256 | 64 | 2 |

This table shows the relationship between payload and dejitter for T3/E3 SAToP lines.

T3/E3 SAToP lines: Payload and Jitter Limits

***Table 14:***

| T3/E3 | Maximum Payload | Maximum Jitter | Minimum Jitter | Minimum Payload | Maximum Jitter | Minimun Jitter |
|---|---|---|---|---|---|---|
| T3 | 1312 | 8 | 2 | 672 | 8 | 2 |
| E3 | 1312 | 16 | 2 | 512 | 8 | 2 |

This table shows the relationship between payload and dejitter for DS0 lines.

CESoPSN DS0 Lines: Payload and Jitter Limits

***Table 15:***

| DS0 | Maximum Payload | Maximum Jitter | Minimum Jitter | Minimum Payload | Maximum Jitter | Minimun Jitter |
|---|---|---|---|---|---|---|
| 1 | 40 | 320 | 10 | 32 | 256 | 8 |
| 2 | 80 | 320 | 10 | 32 | 128 | 4 |
| 3 | 120 | 320 | 10 | 33 | 128 | 4 |
| 4 | 160 | 320 | 10 | 32 | 64 | 2 |
| 5 | 200 | 320 | 10 | 40 | 64 | 2 |
| 6 | 240 | 320 | 10 | 48 | 64 | 2 |
| 7 | 280 | 320 | 10 | 56 | 64 | 2 |
| 8 | 320 | 320 | 10 | 64 | 64 | 2 |
| 9 | 360 | 320 | 10 | 72 | 64 | 2 |
| 10 | 400 | 320 | 10 | 80 | 64 | 2 |
| 11 | 440 | 320 | 10 | 88 | 64 | 2 |
| 12 | 480 | 320 | 10 | 96 | 64 | 2 |
| 13 | 520 | 320 | 10 | 104 | 64 | 2 |
| 14 | 560 | 320 | 10 | 112 | 64 | 2 |
| 15 | 600 | 320 | 10 | 120 | 64 | 2 |
| 16 | 640 | 320 | 10 | 128 | 64 | 2 |
| 17 | 680 | 320 | 10 | 136 | 64 | 2 |
| 18 | 720 | 320 | 10 | 144 | 64 | 2 |
| 19 | 760 | 320 | 10 | 152 | 64 | 2 |

| DS0 | Maximum Payload | Maximum Jitter | Minimum Jitter | Minimum Payload | Maximum Jitter | Minimun Jitter |
|---|---|---|---|---|---|---|
| 20 | 800 | 320 | 10 | 160 | 64 | 2 |
| 21 | 840 | 320 | 10 | 168 | 64 | 2 |
| 22 | 880 | 320 | 10 | 176 | 64 | 2 |
| 23 | 920 | 320 | 10 | 184 | 64 | 2 |
| 24 | 960 | 320 | 10 | 192 | 64 | 2 |
| 25 | 1000 | 320 | 10 | 200 | 64 | 2 |
| 26 | 1040 | 320 | 10 | 208 | 64 | 2 |
| 27 | 1080 | 320 | 10 | 216 | 64 | 2 |
| 28 | 1120 | 320 | 10 | 224 | 64 | 2 |
| 29 | 1160 | 320 | 10 | 232 | 64 | 2 |
| 30 | 1200 | 320 | 10 | 240 | 64 | 2 |
| 31 | 1240 | 320 | 10 | 248 | 64 | 2 |
| 32 | 1280 | 320 | 10 | 256 | 64 | 2 |

# Configuring Clocking

Each SPA port shall be configured either to use system clock from the host card or loop timed independently. Each SPA also supplies a reference clock to the host which can be selected among the received port clocks. This section provides information about how to configure clocking on the 1xOC3 SPA.

This section describes the following topics:

## Configuring Clock Recovery

When configuring clock recovery, consider the following guidelines:

## Adaptive Clock Recovery

- Clock source:
  - In Cisco IOS XR Release 4.2.x and later, recovered clock from a CEM interface on the 1-Port Channelized OC-3/STM1 CEoP SPA can be used as a clock source on the SPA itself.
- Number of clock sources allowed:
  - Refer the section Clock Distribution for more information.
- The clock must be the same as used by the router as the network clock. Any pseudowire in this case can carry the clock.

- The minimum bundle size of CEM pseudowires on the network that delivers robust clock recovery is 4 DS0s.
- The minimum packet size of CEM pseudowires on the network that delivers robust clock recovery is 64 bytes.

## Differential Clocking

- The maximum number of differential clocks sourced from a 1-Port Channelized OC-3/STM1 CEoP SPA is 10.
- The 1-Port Channelized OC-3/STM1 CEoP SPA can recover up to 10 T1/E1 clocks.
- There are several bundles sent from the same port. The bundle that is used for carrying the clock of the port is the first created bundle of the port. Only pseudowires that include the first DS0 of a port can carry differential clock.
- You must have a Stratum-1 clock, a common clock going to both PE routers. If not, the recovery will not work as expected.

To configure clock recovery on the CEoP SPA and to apply the recovered clock to the controller, use the following procedure:

### SUMMARY STEPS

1. **configure**
2. **interface cem** rack/slot/subslot/port:cem-group
3. **transmit-clock** {**differential**}
4. **recover-clock** *clock-id* **{adaptive | differential}**
5. **controller** *name instance*
6. **clock source recovered** *clock-id*

### DETAILED STEPS

| | Command or Action | Purpose |
|---|---|---|
| **Step 1** | **configure**<br>**Example:**<br>`RP/0/RSP0/CPU0:router# configure` | Enters global configuration mode. |
| **Step 2** | **interface cem** rack/slot/subslot/port:cem-group<br>**Example:**<br>`RP/0/RSP0/CPU0:router(config)# interface cem 0/1/0/0:2` | Specifies the complete CEM interface instance. |
| **Step 3** | **transmit-clock** {**differential**}<br>**Example:**<br>`RP/0/RSP0/CPU0:router(config-if)# transmit-clock source internal` | Configures the CEM port transmit clock source. This is typically configured at the node acting as primary to send the clock. This command is not required for Adaptive Clock Recovery. |

| | Command or Action | Purpose |
|---|---|---|
| **Step 4** | **recover-clock** *clock-id* **{adaptive \| differential}**<br>**Example:**<br>`RP/0/RSP0/CPU0:router(config-if)# recover-clock clock-id <> adaptive` | Specifies the recovered clock number and the clock recovery type. This is typically configured at the node acting as subordinate that recovers the clock from incoming CEM packets from core. |
| **Step 5** | **controller** *name instance*<br>**Example:**<br>`RP/0/RSP0/CPU0:router(config)# controller t1 0/1/1/0/0/0` | Enters controller configuration submode and specifies the controller name and instance identifier with the *rack/slot/module/port/name/instance1/instance2* notation. |
| **Step 6** | **clock source recovered** *clock-id*<br>**Example:**<br>`RP/0/RSP0/CPU0:router(config-t1)# clock source recovered 3` | Specifies the recovered clock number. This applies the recovered clock from a CEM interface on a T1/E1 Controller. |

## Verifying Clock recovery

To verify clock recovery, use the **show recovered-clock** command.

```
Router# show recovered-clock sublsot 0/3/0
Recovered clock status for subslot 0/3/0
----------------------------------------
Clock    Mode         Port CEM  Status     Frequency Offset(ppb)
1        ADAPTIVE     0    1    HOLDOVER   0
Router# show recovered-clock
Recovered clock status for subslot 3/0
----------------------------------------
Clock    Mode         Port CEM  Status     Frequency Offset(ppb)
1        ADAPTIVE     0    1    ACQUIRING  -694
```

# Show Commands for CEM

You can use the command **show controller cem** <*forward interface instance*> to verify the CEM parameter information. The following example provides a sample output for the command.

## Ouput of show controller cem forward interface instance command

```
RP/0/RSP0/CPU0:Router# show controllers cem 0/4/1/0:0

Interface                : CEM0/4/1/0:0
Admin state              : Up
Driver link state        : Up
Port bandwidth(kbps)     : 1984
Dejitter buffer          : 16
Payload size             : 248
Dummy mode               : last-frame
Dummy pattern            : 0xff
Idle pattern             : 0xff
Signalling               : No CAS
```

```
RTP                      : Enabled
Ingress packets          : 1638960097, Ingress packets drop     : 0
Egress packets           : 1207954294, Egress packets drop      : 287140468
Missing packets          : 160475876, Reordered packets        : 50092
Malformed packets        : 73, Misorder drops           : 7
Jitter buffer underrun   : 28, Error seconds            : 79673
Severely error seconds   : 25721, Unavailable seconds      : 160361
Failure counts           : 2
```

# Configuration Examples for CEM

This section contains the following examples:

## Circuit Emulation Interface Configuration: Examples

The following example shows a sample CEM interface configuration on the Cisco 1-port Channelized OC3/STM-1 SPA.

### Channelized Sonet / SDH Configurations and CEM Interface Creation

The following examples shows a Channelized Sonet/ SDH Configurations and CEM Interface Creation.

### Sonet - T1 Channelization and CEM Interface Creation

```
hw-module subslot  <loc> cardtype sonet
controller SONET 0/0/1/0
 sts 1
  mode vt15-t1
sts 2
  mode vt15-t1
sts 3
  mode vt15-t1
commit
```

**In case of structure agnostic cem interface**:

```
controller T1 0/0/1/0/1/4/1
 cem-group unframed
```

**In case of structure aware cem interface**:

```
controller T1 0/0/1/0/1/5/1
 cem-group framed 0 timeslots 1
 cem-group framed 1 timeslots 2-3
 cem-group framed 2 timeslots 4-6
 cem-group framed 3 timeslots 7-10
 cem-group framed 4 timeslots 11-15
 cem-group framed 5 timeslots 16-21
 cem-group framed 6 timeslots 22-24
```

### SDH - T1 Channelization and CEM Interface Creation

```
hw-module subslot  <loc> cardtype sdh
controller SONET0/0/2/0
```

```
 au 1
  mode c11-t1
 au 2
  mode c11-t1
 au 3
  mode c11-t1
commit
```

**In case of structure agnostic cem interface**:

```
controller T1 0/0/2/0/1/1/4
 cem-group unframed
```

**In case of structure aware cem interface**:

```
controller T1 0/0/2/0/1/7/1
 cem-group framed 0 timeslots 1
 cem-group framed 1 timeslots 2-3
 cem-group framed 2 timeslots 4-6
 cem-group framed 3 timeslots 7-10
 cem-group framed 4 timeslots 11-15
 cem-group framed 5 timeslots 16-21
 cem-group framed 6 timeslots 22-24
```

## SDH - E1 Channelization and CEM Interface Creation

```
hw-module subslot  <loc> cardtype sdh
controller SONET 0/0/2/0
 au 1
  mode tug3
  width 3
  tug3 1
   mode c12-e1
tug3 2
   mode c12-e1
 tug3 3
   mode c12-e1
commit
```

**In case of structure agnostic cem interface**:

```
controller E1 0/0/2/0/1/1/1/1
 cem-group unframed
```

**In case of structure aware cem interface**:

```
controller E1 0/0/2/0/1/1/7/1
 cem-group framed 0 timeslots 1
 cem-group framed 1 timeslots 2-3
 cem-group framed 2 timeslots 4-6
 cem-group framed 3 timeslots 7-10
 cem-group framed 4 timeslots 11-15
 cem-group framed 5 timeslots 16-21
 cem-group framed 6 timeslots 22-31
```

## CEM Interface Configuration

```
RP/0/RSP0/CPU0:CEOP-01#show runn interface cem 0/0/2/0/1/1/1/1:1

interface CEM0/0/2/0/1/1/1/1:1
```

```
 l2transport
 !
CEM Interface Config Options :

RP/0/RSP0/CPU0:CEOP-01(config)#interface cem 0/0/2/0/1/1/1/1:1
RP/0/RSP0/CPU0:CEOP-01(config-if)#cem ?
  class-attach  Attach a CEM class to this interface
  clock         Configure clocks on this CEM interface
  dejitter      Configure dejitter buffer
  dummy         Configure dummy frame parameters
  idle          Configure idle frame parameters
  payload       Configure payload size of CEM frames
```

## SAToP CEM interface creation on T3 / E3 on Cisco 2-Port Channelized T3/E3 Circuit Emulation and Channelized ATM SPA

```
RP/0/0/CPU0:router(config)#controller t3 0/4/2/0
RP/0/0/CPU0:router(config-t3)#cem-group ?
  unframed  clear channel carrying CEM
RP/0/0/CPU0:router(config-t3)#cem-group unframed
RP/0/0/CPU0:router(config-t3)#commit
RP/0/0/CPU0:router(config-t3)#
```

## SAToP CEM interface creation on T1 / E1 on Cisco 2-Port Channelized T3/E3 Circuit Emulation and Channelized ATM SPA

```
RP/0/0/CPU0:router(config)#controller t3 0/4/2/0
RP/0/0/CPU0:router(config-t3)#mode ?
  atm     clear channel carrying atm
  e1      channelize into 21 E1s
  serial  clear channel carrying hdlc like payload
  t1      channelized into 28 T1s
RP/0/0/CPU0:router(config-t3)#mode e1
RP/0/0/CPU0:router(config-t3)#commit

RP/0/0/CPU0:router(config)#controller e1 0/4/2/0/1
RP/0/0/CPU0:router(config-e1)#cem-group ?
  framed    Configure a framed CEM interface on T1/E1
  unframed  Configure a unframed CEM interface on T1/E1
RP/0/0/CPU0:router(config-e1)#cem-group unframed ?
  <cr>
RP/0/0/CPU0:router(config-e1)#cem-group unframed
RP/0/0/CPU0:router(config-e1)#commit
```

## CESoPSN CEM interface creation on T1/E1 on Cisco 2-Port Channelized T3/E3 Circuit Emulation and Channelized ATM SPA

```
RP/0/0/CPU0:router(config)#controller t3 0/4/2/1
RP/0/0/CPU0:router(config-t3)#mode ?
  atm     clear channel carrying atm
  e1      channelize into 21 E1s
  serial  clear channel carrying hdlc like payload
  t1      channelized into 28 T1s
RP/0/0/CPU0:router(config-t3)#mode t1
RP/0/0/CPU0:router(config-t3)#commit

RP/0/0/CPU0:router(config)#controller t1 0/4/2/1/1
RP/0/0/CPU0:router(config-t1)#cem-group ?
```

```
  framed    Configure a framed CEM interface on T1/E1
  unframed  Configure a unframed CEM interface on T1/E1
RP/0/0/CPU0:router(config-t1)#cem-group framed ?
  <0-23>  CEM group number
RP/0/0/CPU0:router(config-t1)#cem-group framed 0 ?
  timeslots  List of timeslots in the CEM group
RP/0/0/CPU0:router(config-t1)#cem-group framed 0 timeslots ?
  WORD  timeslot string seprated by (:) or (-) from 1 to 24. (:) indicates individual
timeslot and (-) represent range
RP/0/0/CPU0:router(config-t1)#cem-group framed 0 timeslots 1:23
RP/0/0/CPU0:router(config-t1)#commit
```

## SAToP CEM interface creation on T1 / E1 on Cisco 24-Port Channelized T1/E1 Circuit Emulation and Channelized ATM SPA

```
RP/0/0/CPU0:router(config)#controller e1 0/4/1/2
RP/0/0/CPU0:router(config-e1)#cem-group ?
  framed    Configure a framed CEM interface on T1/E1
  unframed  Configure a unframed CEM interface on T1/E1
RP/0/0/CPU0:router(config-e1)#cem-group unframed ?
  <cr>
RP/0/0/CPU0:router(config-e1)#cem-group unframed
RP/0/0/CPU0:router(config-e1)#commit
```

## CESoPSN CEM interface creation on T1 / E1 on Cisco 24-Port Channelized T1/E1 Circuit Emulation and Channelized ATM SPA

```
RP/0/0/CPU0:router(config)#controller e1 0/4/1/1
RP/0/0/CPU0:router(config-e1)#cem-group framed ?
  <0-30>  CEM group number
RP/0/0/CPU0:router(config-e1)#cem-group framed 1 ?
  timeslots  List of timeslots in the CEM group
RP/0/0/CPU0:router(config-e1)#cem-group framed 1 timeslots ?
  WORD  timeslot string seprated by (:) or (-) from 1 to 31. (:) indicates individual
timeslot and (-) represent range
RP/0/0/CPU0:router(config-e1)#cem-group framed 1 timeslots 1:20
RP/0/0/CPU0:router(config-e1)#commit
```

# Clock Recovery: Example

## Adaptive Clock Recovery Configuration:

(E1 configurations are similar to T1s given below)

```
CE1
----
Router (config)#controller t1 0/0/2/0/1/1/4
Router (config-t1)#clock source internal

PE1 (Acts as source of clock, but no specific configuration under CEM Interface is needed
here)
-----------------------------------------------------------------------------------------
Router (config)#controller t1 0/0/2/0/1/1/4
Router (config-t1)#clock source line
```

```
PE2 (On PE node where clock recovery is done):
----------------------------------------
```

To recover the adaptive clock:

```
Router(config)# interface cem 0/0/2/0/1/1/4:0
Router(config-if)#cem clock recover <clock-id> adaptive
```

To apply the recovered clock,

```
Router (config)#controller t1 0/0/2/0/1/1/4
Router (config-t1)#clock source recovered <clock-id>

CE2
----
Router (config)#controller t1 0/0/2/0/1/1/4
Router (config-t1)#clock source line
```

## Differential Clock Recovery Configuration:

```
CE1
----
Router (config)#controller t1 0/0/2/0/1/1/4
Router (config-t1)#clock source internal

PE1 (Acts as source of clock)
-----------------------------
Router (config)#controller t1 0/0/2/0/1/1/4
Router (config-t1)#clock source line
Router(config)# interface cem 0/0/2/0/1/1/4:0
Router(config-if)#cem clock transmit differential

PE2 (To recover the differential clock):
---------------------------------------
Router (config)#interface cem 0/0/2/0/1/1/4:0
Router (config-t1)#cem clock recover <clock-id> differential
```

To apply the recovered clock:

```
Router (config)#controller t1 0/0/2/0/1/1/4
Router (config-t1)#cem clock recovered <clock-id>

CE2
----
Router (config)#controller t1 0/0/2/0/1/1/4
Router (config-t1)#clock source line
```

**Differential Clock Recovery Configuration:**

CHAPTER 13

# Configuring Clear Channel SONET Controllers

This module describes the configuration of clear channel SONET controllers.

SONET controller configuration is a prerequisite for configuring Inter-Chassis Stateful Switchover (ICSSO) for Point-to-Point Protocol (PPP) and Multilink PPP (MLPPP), channelized SONET, or serial interfaces on the Cisco ASR 9000 Series Router.

SONET allows you to define optical signals and a synchronous frame structure for multiplexed digital traffic. It is a set of standards defining the rates and formats for optical networks specified in American National Standards Institute (ANSI) T1.105, ANSI T1.106, and ANSI T1.117.

For more information about configuring a channelized SONET controller, see the module.

The commands for configuring the Layer 1 SONET controllers are provided in the *Cisco IOS XR Interface and Hardware Component Command Reference*.

### Feature History for Configuring SONET Controllers on Cisco IOS XR Software

| Release | Modification |
|---|---|
| Release 3.9.0 | Support for the following SPA was introduced on the Cisco ASR 9000 Series Router:<br>• Cisco 2-Port Channelized OC-12c/DS0 SPA |
| Release 4.0.0 | Support for the following SPAs was introduced on the Cisco ASR 9000 Series Router:<br>• Cisco 1-Port Channelized OC-48/STM-16 SPA<br>• Cisco 1-Port OC-192c/STM-64 POS/RPR XFP SPA<br>• Cisco 2-Port OC-48c/STM-16 POS/RPR SPA<br>• Cisco 8-Port OC-12c/STM-4 POS SPA |
| Release 4.0.1 | Support for the following SPAs was introduced on the Cisco ASR 9000 Series Router:<br>• Cisco 4-Port OC-3c/STM-1 POS SPA<br>• Cisco 8-Port OC-3c/STM-1 POS SPA |

• Prerequisites for Configuring Clear Channel SONET Controllers, on page 480
• Information About Configuring SONET Controllers, on page 480
• How to Configure Clear Channel SONET Controllers, on page 482
• Configuration Examples for SONET Controllers, on page 492

# Prerequisites for Configuring Clear Channel SONET Controllers

You must be in a user group associated with a task group that includes the proper task IDs. The command reference guides include the task IDs required for each command. If you suspect user group assignment is preventing you from using a command, contact your AAA administrator for assistance.

Before configuring SONET controllers, be sure that the following tasks and conditions are met:

- 
- You have one of the following SPAs installed:
  - Cisco 2-Port Channelized OC-12c/DS0 SPA
  - Cisco 1-Port Channelized OC-48/STM-16 SPA
  - Cisco 4-Port OC-3c/STM-1 POS SPA
  - Cisco 8-Port OC-3c/STM-1 POS SPA
  - Cisco 1-Port OC-192c/STM-64 POS/RPR XFP SPA
  - Cisco 2-Port OC-48c/STM-16 POS/RPR SPA
  - Cisco 8-Port OC-12c/STM-4 POS SPA
- You know how to apply the specify the SONET controller name and instance identifier with the generalized notation *rack/slot/module/port*. The SONET controller name and instance identifier are required with the **controller sonet** command.

# Information About Configuring SONET Controllers

To configure SONET controllers, you must understand the following concepts:

## SONET Controller Overview

In routers supporting Cisco IOS XR software, the physical ports on certain line cards are called controllers. Before you can configure channelized SONET or a serial interface, you need to configure the SONET controller.

The commands used to configure the physical SONET port are grouped under the SONET controller configuration mode. To get to the SONET controller configuration mode, enter the **controller sonet** command in global configuration mode. You can also preconfigure a SONET controller using the **controller preconfigure sonet** global configuration command.

The router uses SONET controllers for Layer 1 and Layer 2 processing.

# Default Configuration Values for SONET Controllers

The table below describes some default configuration parameters that are present on SONET controllers.

*Table 16: SONET Controller Default Configuration Values*

| Parameter | Default Value | Configuration File Entry |
|---|---|---|
| Reporting of the following alarms for a SONET controller:<br>• Bit 1 (B1) bit error rate (BER) threshold crossing alert (TCA) errors<br>• Bit 2 (B2) BER TCA errors<br>• Signal failure BER errors<br>• Section loss of frame (SLOF) errors<br>• Section loss of signal (SLOS) errors | **enabled** | To disable reporting of any alarms enabled by default, use the **no report** [**b1-tca** \| **b2-tca** \| **sf-ber** \| **slof** \| **slos**] command in SONET/SDH configuration mode.<br>To enable reporting of line alarm indication signal (LAIS), line remote defect indication (LRDI), or signal degradation BER errors, use the **report** [**lais** \| **lrdi** \| **sd-ber**] command in SONET/SDH configuration mode. |
| Reporting of the following alarms for a SONET path controller:<br>• Bit 3 (B3) BER TCA errors<br>• Path loss of pointer (PLOP) errors | **enabled** | To disable B3 BER TCA or PLOP reporting on the SONET path controller, enter the **no report b3-tca** or **no report plop** command in SONET/SDH path configuration submode.<br>To enable reporting of path alarm indication signal (PAIS), path payload mismatch (PPLM), path remote defect indication (PRDI), or path trace identity mismatch (PTIM) errors, use the **report** [ **pais** \| **pplm** \| **prdi** \| **ptim** command in SONET/SDH path configuration submode. |
| Synchronous payload envelope (SPE) scrambling | **enabled** | To disable SPE scrambling on a SONET controller, enter the **path scrambling disable** command in SONET controller configuration submode. |
| Keepalive timer | **enabled** | To turn off the keepalive timer, enter the **keepalive disable** command in interface configuration mode. |

# SONET APS

The automatic protection switching (APS) feature allows switchover of interfaces in the event of failure, and is often required when connecting SONET equipment to telco equipment. APS refers to the mechanism of using a *protect* interface in the SONET network as the backup for *working* interface. When the working interface fails, the protect interface quickly assumes its traffic load. The working interfaces and their protect interfaces make up an *APS group*.

In Cisco IOS XR software, SONET APS configuration defines a working line and a protection line for each redundant line pair. The working line is the primary or preferred line, and communications take place over that line as long as the line remains operative. If a failure occurs on the working line, APS initiates a switchover to the protection line. For proper APS operation between two routers, a working line on one router must also be the working line on the other router, and the same applies to the protection line.

In a SONET APS group, each connection may be bidirectional or unidirectional, and revertive or non-revertive. The same signal payload is sent to the working and protect interfaces. The working and protect interfaces terminate in two different routers.

The protect interface directs the working interface to activate or deactivate in the case of degradation, loss of channel signal, or manual intervention. If communication between the working and protect interfaces is lost, the working router assumes full control of the working interface as if no protect circuit existed.

In an APS group, each line is called a *channel*. In bidirectional mode, the receive and transmit channels are switched as a pair. In unidirectional mode, the transmit and receive channels are switched independently. For example, in bidirectional mode, if the receive channel on the working interface has a loss of channel signal, both the receive and transmit channels are switched.

# How to Configure Clear Channel SONET Controllers

This section contains the following procedures:

## Configuring a Clear Channel SONET Controller

This task explains how to configure SONET controllers as a prerequisite to configuring POS or serial interfaces.

### Before you begin

- You need to have a supported POS SPA or channelized SPA installed in a router that is running the corresponding supported Cisco IOS XR software release.
- If you want to ensure recovery from fiber or equipment failures, then configure SONET APS on the router as describe in the Configuring SONET APS.

### SUMMARY STEPS

1. **configure**
2. **controller sonet** *interface-path-id*
3. **clock source** {**internal** | **line**}
4. **line delay trigger** *value*
5. **line delay clear** *value*
6. **framing** {**sdh** | **sonet**}

7. **loopback** {**internal** | **line**}
8. **overhead** {**j0** | **s1s0**} *byte-value*
9. **path** *keyword [values]*
10. **end** or **commit**
11. **show controllers sonet** *interface-path-id*

## DETAILED STEPS

| | Command or Action | Purpose |
|---|---|---|
| **Step 1** | **configure**<br>**Example:**<br>`RP/0/RSP0/CPU0:router# configure` | Enters global configuration mode. |
| **Step 2** | **controller sonet** *interface-path-id*<br>**Example:**<br>`RP/0/RSP0/CPU0:router(config)# controller sonet 0/1/0/0` | Enters SONET controller configuration submode and specifies the SONET controller name and instance identifier with the *rack/slot/module/port* notation. |
| **Step 3** | **clock source** {**internal** \| **line**}<br>**Example:**<br>`RP/0/RSP0/CPU0:router(config-sonet)# clock source internal` | Configures the SONET port transmit clock source, where the **internal** keyword sets the internal clock and **line** keyword sets the clock recovered from the line.<br>• Use the **line** keyword whenever clocking is derived from the network. Use the **internal** keyword when two routers are connected back-to-back or over fiber for which no clocking is available.<br>• The **line** clock is the default. |
| **Step 4** | **line delay trigger** *value*<br>**Example:**<br>`RP/0/RSP0/CPU0:router(config-sonet)# line delay trigger 3000` | (Optional) Configures the SONET line delay trigger values, where the trigger values are in the range from 0 through 60000 milliseconds, and the default delay trigger value is 0 milliseconds. |
| **Step 5** | **line delay clear** *value*<br>**Example:**<br>`RP/0/RSP0/CPU0:router(config-sonet)# line delay clear 4000` | (Optional) Configures the amount of time before a SONET line delay trigger alarm is cleared. The range is from 1000 through 180000 milliseconds, and the default is 10 seconds. |
| **Step 6** | **framing** {**sdh** \| **sonet**}<br>**Example:**<br>`RP/0/RSP0/CPU0:router(config-sonet)# framing sonet` | (Optional) Configures the controller framing with either the **sdh** keyword for Synchronous Digital Hierarchy (SDH) framing or the **sonet** keyword for SONET framing.<br>SONET framing (**sonet**) is the default. |

| | Command or Action | Purpose |
|---|---|---|
| **Step 7** | **loopback** {**internal** \| **line**}<br>**Example:**<br>`RP/0/RSP0/CPU0:router(config-sonet)# loopback internal` | (Optional) Configures the SONET controller for loopback, where the **internal** keyword selects internal (terminal) loopback, or the **line** keyword selects line (facility) loopback. |
| **Step 8** | **overhead** {**j0** \| **s1s0**} *byte-value*<br>**Example:**<br>`RP/0/RSP0/CPU0:router(config-sonet)# overhead s1s0` | (Optional) Configures the controller's overhead, where the **j0** keyword specifies the STS identifier (J0/C1) byte, and the **s1s0** keyword specifies bits s1 and s0 of H1 byte.<br>• The default byte value for the **j0** keyword is 0xcc, and the default byte value for the **s1s0** keyword is 0.<br>• The range of valid values for **j0** and **s1s0** is 0 through 255. |
| **Step 9** | **path** *keyword [values]*<br>**Example:**<br>`RP/0/RSP0/CPU0:router(config-sonet)# path delay trigger 25` | (Optional) Configures SONET controller path values.<br>Keyword definitions are as follows:<br>• **ais-shut**—Set sending path alarm indication signal (PAIS) when shut down.<br>• **b3-ber-prdi**—Enable sending of a path-level remote defect indication (PRDI) when the bit error rate (BER) bit interleaved parity (BIP) threshold is exceeded.<br>• **delay clear** *value*—Set the amount of time before a Synchronous Transport Signal (STS) path delay trigger alarm is cleared. Replace the *value* argument with a number in the range from 0 through 180000 milliseconds. The default value is 10 seconds.<br>• **delay trigger** *value* —Set SONET path delay values or delay trigger value. Replace the *value* argument with a number in the range from 0 through 60000 milliseconds. The default value is 0 milliseconds.<br>• **overhead** [**c2** *byte-value* \| **j1** *line*] —Set SONET POH byte or bit values. Enter the **c2** keyword to specify STS SPE content (C2) byte, and replace the *byte-value* argument with a number in the range from 0 through 255. Enter the **j1** keyword to configure the SONET path trace (J1) buffer, and replace the *line* argument with the path trace buffer identifier (in ASCII text).<br>• **report [b3-tca** \| **pais** \| **plop** \| **pplm** \| **prdi** \| **ptim**]—Set SONET path alarm reporting. Specifies which alarms are reported and which bit error rate (BER) thresholds will signal an alarm. By default, B3 BER threshold crossing alert (TCA) and path loss of pointer (PLOP) reporting are enabled. Specifying the **pais** keyword sets PAIS reporting status; **pplm** sets path payload |

| | Command or Action | Purpose |
|---|---|---|
| | | mismatch (PPLM) defect reporting status; **prdi** sets path remote defect indication reporting status; and **ptim** sets path trace identity mismatch (PTIM) defect reporting status.<br><br>The **no report b3-tca** and **no report plop** commands in SONET/SDH path configuration submode disable B3 BER TCA and PLOP reporting status, respectively.<br><br>• **scrambling disable**—Disable SPE scrambling. Note that SPE scrambling is enabled by default.<br><br>• **threshold b3-tca** *BER*—Set SONET path BER threshold value. Replace the *BER* argument with a number in the range from 3 through 9. The threshold value is interpreted as a negative exponent of 10 when determining the bit error rate. For example, a value of 5 implies a bit error rate of 10 to the minus 5. The default BER threshold value is 6.<br><br>• **uneq-shut**—Sets sending Unequipped (UNEQ) when shut down. |
| **Step 10** | **end** or **commit**<br><br>**Example:**<br><br>`RP/0/RSP0/CPU0:router(config-sonet)# end`<br><br>or<br><br>`RP/0/RSP0/CPU0:router(config-sonet)# commit` | Saves configuration changes.<br><br>• When you issue the **end** command, the system prompts you to commit changes:<br><br>`Uncommitted changes found, commit them before exiting(yes/no/cancel)? [cancel]:`<br><br>- Entering **yes** saves configuration changes to the running configuration file, exits the configuration session, and returns the router to EXEC mode.<br><br>- Entering **no** exits the configuration session and returns the router to EXEC mode without committing the configuration changes.<br><br>- Entering **cancel** leaves the router in the current configuration session without exiting or committing the configuration changes.<br><br>• Use the **commit** command to save the configuration changes to the running configuration file and remain within the configuration session. |
| **Step 11** | **show controllers sonet** *interface-path-id*<br><br>**Example:** | Verifies the SONET controller configuration. |

| | Command or Action | Purpose |
|---|---|---|
| | `RP/0/RSP0/CPU0:router# show controllers sonet 0/1/0/0` | |

# Configuring SONET APS

SONET APS offers recovery from fiber (external) or equipment (interface and internal) failures at the SONET line layer. This task explains how to configure basic automatic protection switching (APS) on the router and how to configure more than one protect or working interface on a router by using the **aps group** command.

To verify the configuration or to determine if a switchover has occurred, use the **show aps** command.

### Before you begin

Before you configure SONET APS, be sure that you have a supported channelized SPA installed in a router that is running Cisco IOS XR software.

On the Cisco ASR 9000 Series Router, you must have a 2-Port Channelized OC-12c/DS0 SPA installed.

**Restrictions**

Before you configure SONET APS, consider the following restictions:

- The POS SPAs on the Cisco ASR 9000 Series Router do not support either single router or multirouter APS.
- The Cisco ASR 9000 Series Router supports multirouter APS on the 2-Port Channelized OC-12/DS0 SPA.
- For proper APS operation between two routers, a working line on one router must also be the working line on the other router, and the same applies to the protection line.

## SUMMARY STEPS

1. **configure**
2. **aps group** *number*
3. **channel** {**0** | **1**} **local sonet** *interface*
4. Repeat Step 3 for each channel in the group.
5. **exit**
6. **interface loopback** *number*
7. **ipv4 address** *ip-address mask*
8. **exit**
9. Execute any one the following commands:
   - **interface pos** *interface-path-id*
   - **interface serial** *interface-path-id*
10. **ipv4 address** *ip-address mask*
11. Execute any one the following commands:
   - **pos crc** {**16** | **32**}
   - **crc** {**16** | **32**}

12. **encapsulation** {**frame-relay** | **hdlc** | **ppp**}
13. **keepalive** {*interval* | **disable**}[*retry*]
14. **no shutdown**
15. Repeat Step 9 through Step 13 for each channel in the group.
16. **exit**
17. **controller sonet** *interface-path-id*
18. **ais-shut**
19. **path scrambling disable**
20. **clock source** {**internal** | **line**}
21. Repeat Step 16 through Step 19 for each channel in the group.
22. **end** or **commit**
23. **exit**
24. **exit**
25. **show aps**
26. **show aps group** [*number*]

## DETAILED STEPS

| | Command or Action | Purpose |
|---|---|---|
| **Step 1** | **configure**<br>**Example:**<br>`RP/0/RSP0/CPU0:router# configure` | Enters global configuration mode. |
| **Step 2** | **aps group** *number*<br>**Example:**<br>`RP/0/RSP0/CPU0:router(config)# aps group 1` | Adds an APS group with a specified number and enters APS group configuration mode.<br>• Use the **aps group** command in global configuration mode.<br>• To remove a group, use the **no** form of this command, as in: **no aps group** *number*, where the value range is from 1–255.<br>**Note** • To use the **aps group** command, you must be a member of a user group associated with the proper task IDs for aps commands.<br>• The **aps group** command is used even when a single protect group is configured. |
| **Step 3** | **channel** {**0** \| **1**} **local sonet** *interface*<br>**Example:** | Creates a channel for the APS group. **0** designates a protect channel, and **1** designates a working channel. |

| | Command or Action | Purpose |
|---|---|---|
| | `RP/0/RSP0/CPU0:router(config-aps)# channel 0 local SONET 0/0/0/1` | **Note** • If the protect channel is local, it must be assigned using the **channel** command *before* any of the working channels is assigned. |
| **Step 4** | Repeat Step 3 for each channel in the group. | — |
| **Step 5** | **exit** | Exits APS group configuration mode and enters global configuration mode. |
| **Step 6** | **interface loopback** *number*<br>**Example:**<br>`RP/0/RSP0/CPU0:router(config)# interface loopback 1` | (Optional) Configures a loopback interface if a two-router APS is desired and enters interface configuration mode for a loopback interface.<br>**Note** • In this example, the loopback interface is used as the interconnect. |
| **Step 7** | **ipv4 address** *ip-address mask*<br>**Example:**<br>`RP/0/RSP0/CPU0:router(config-if)# ipv4 address 172.18.0.1 255.255.255.224` | Assigns an IPV4 address and subnet mask to the loopback interface. |
| **Step 8** | **exit** | Exits interface configuration mode for a loopback interface, and enters global configuration mode. |
| **Step 9** | Execute any one the following commands:<br>• **interface pos** *interface-path-id*<br>• **interface serial** *interface-path-id*<br>**Example:**<br>`RP/0/RSP0/CPU0:router(config)# interface POS 0/2/0/0`<br>`or`<br>`RP/0/RSP0/CPU0:router(config)# interface serial 0/1/1/0/0/0:0` | Connects the interface for the channel selected in Step 3, and enters interface configuration mode.<br>For serial interfaces, specifies the complete interface number with the *rack/slot/module/port/T3Num/T1num:instance* notation. |
| **Step 10** | **ipv4 address** *ip-address mask*<br>**Example:**<br>`RP/0//CPU0:router(config-if)# ipv4 address 172.18.0.1 255.255.255.224` | Assigns an IPv4 address and subnet mask to the interface. |
| **Step 11** | Execute any one the following commands:<br>• **pos crc** {**16** \| **32**}<br>• **crc** {**16** \| **32**}<br>**Example:** | Selects a CRC value for the channel. Enter the **16** keyword to specify 16-bit CRC mode, or enter the **32** keyword to specify 32-bit CRC mode. For POS interfaces, the default CRC is 32. For serial interfaces, the default is 16. |

| | Command or Action | Purpose |
|---|---|---|
| | `RP/0/RSP0/CPU0:router(config-if)# pos crc 32`<br>or<br>`RP/0/RSP0/CPU0:router(config-if)# crc 32` | |
| **Step 12** | **encapsulation** {**frame-relay** \| **hdlc** \| **ppp**}<br>**Example:**<br>`RP/0/RSP0/CPU0:router(config-if)# encapsulation ppp` | (Serial interfaces only) Set the Layer 2 encapsulation of an interface. |
| **Step 13** | **keepalive** {*interval* \| **disable**}[*retry*]<br>**Example:**<br>`RP/0/RSP0/CPU0:router(config-if)# keepalive disable` | Sets the keepalive timer for the channel, where:<br>• *interval*—Number of seconds (from 1 to 30) between keepalive messages. The default is 10.<br>• **disable**—Turns off the keepalive timer.<br>• *retry*—(Optional) Number of keepalive messages (from 1 to 255) that can be sent to a peer without a response before transitioning the link to the down state. The default is 5 for interfaces with PPP encapsulation, and 3 for interfaces with HDLC encapsulation.<br>The **keepalive** command does not apply to interfaces using Frame Relay encapsulation. |
| **Step 14** | **no shutdown**<br>**Example:**<br>`RP/0/RSP0/CPU0:router(config-if)# no shutdown` | Removes the shutdown configuration.<br>• The removal of the shutdown configuration removes the forced administrative down on the interface, enabling that interface to move to an up or down state (assuming the parent SONET layer is not configured administratively down). |
| **Step 15** | Repeat Step 9 through Step 13 for each channel in the group. | — |
| **Step 16** | **exit** | Exits interface configuration mode, and enters global configuration mode. |
| **Step 17** | **controller sonet** *interface-path-id*<br>**Example:**<br>`RP/0/RSP0/CPU0:router(config)# controller sonet 0/1/0/0` | Enters SONET controller configuration mode and specifies the SONET controller name and instance identifier with the *rack/slot/module/port* notation. |
| **Step 18** | **ais-shut**<br>**Example:**<br>`RP/0/RSP0/CPU0:router(config-sonet)# ais-shut` | Configures SONET path values such as alarm indication signal (AIS) at shut down. |

| | Command or Action | Purpose |
|---|---|---|
| **Step 19** | **path scrambling disable**<br>**Example:**<br>`RP/0/RSP0/CPU0:router(config-sonet)# path scrambling disable` | (Optional) Disables synchronous payload envelope (SPE) scrambling.<br>**Note** • SPE scrambling is enabled by default. |
| **Step 20** | **clock source** {**internal** \| **line**}<br>**Example:**<br>`RP/0/RSP0/CPU0:router(config-sonet)# clock source internal` | Configures the SONET port TX clock source, where the **internal** keyword sets the internal clock and the **line** keyword sets the clock recovered from the line.<br>• Use the **line** keyword whenever clocking is derived from the network; use the **internal** keyword when two routers are connected back-to-back or over fiber for which no clocking is available.<br>• The line clock (**line**) is the default. |
| **Step 21** | Repeat Step 16 through Step 19 for each channel in the group. | — |
| **Step 22** | **end** or **commit**<br>**Example:**<br>`RP/0/RSP0/CPU0:router(config-sonet)# end`<br>or<br>`RP/0/RSP0/CPU0:router(config-sonet)# commit` | Saves configuration changes.<br>• When you issue the **end** command, the system prompts you to commit changes:<br>`Uncommitted changes found, commit them before exiting(yes/no/cancel)? [cancel]:`<br>- Entering **yes** saves configuration changes to the running configuration file, exits the configuration session, and returns the router to EXEC mode.<br>- Entering **no** exits the configuration session and returns the router to EXEC mode without committing the configuration changes.<br>- Entering **cancel** leaves the router in the current configuration session without exiting or committing the configuration changes.<br>• Use the **commit** command to save the configuration changes to the running configuration file and remain within the configuration session. |
| **Step 23** | **exit** | Exits SONET controller configuration mode, and enters global configuration mode. |
| **Step 24** | **exit** | Exits global configuration mode, and enters EXEC mode. |
| **Step 25** | **show aps**<br>**Example:** | (Optional) Displays the operational status for all configured SONET APS groups. |

| | Command or Action | Purpose |
|---|---|---|
| | `RP/0/RSP0/CPU0:router# show aps` | |
| **Step 26** | **show aps group** [*number*]<br>**Example:**<br>`RP/0/RSP0/CPU0:router# show aps group 3` | (Optional) Displays the operational status for configured SONET APS groups.<br>**Note** • The **show aps group** command is more useful than the **show aps** command when multiple groups are defined. |

# Configuring a Hold-off Timer to Prevent Fast Reroute from Being Triggered

When APS is configured on a router, it does not offer protection for tunnels; because of this limitation, fast reroute (FRR) still remains the protection mechanism for Multiprotocol Label Switching (MPLS) traffic-engineering.

When APS is configured in a SONET core network, an alarm might be generated toward a router downstream. If the router downstream is configured with FRR, you may want to configure a hold-off timer at the SONET level to prevent FRR from being triggered while the CORE network is doing a restoration. Perform this task to configure the delay.

### Before you begin

Configure SONET APS, as describe in the *Configuring SONET APS* section.

## SUMMARY STEPS

1. **configure**
2. **controller sonet** *interface-path-id*
3. **line delay trigger** *value* or **path delay trigger** *value*
4. **end** or **commit**

## DETAILED STEPS

| | Command or Action | Purpose |
|---|---|---|
| **Step 1** | **configure**<br>**Example:**<br>`RP/0/RSP0/CPU0:router# configure` | Enters global configuration mode. |
| **Step 2** | **controller sonet** *interface-path-id*<br>**Example:**<br>`RP/0/RSP0/CPU0:router(config)# controller sonet 0/6/0/0` | Enters SONET configuration mode. |
| **Step 3** | **line delay trigger** *value* or **path delay trigger** *value*<br>**Example:** | Configures SONET port delay trigger values in milliseconds. |

| | Command or Action | Purpose |
|---|---|---|
| | `RP/0/RSP0/CPU0:router(config-sonet)# line delay trigger 250`<br>or<br>`RP/0/RSP0/CPU0:router(config-sonet)# path delay trigger 300` | • Tip The commands in Step 2 and Step 3 can be combined in one command string and entered from global configuration mode like this: **controller sonet** *r/s/m/p* **line delay trigger** or **controller sonet** *r/s/m/p* **path delay trigger**. |
| **Step 4** | **end** or **commit**<br>**Example:**<br>`RP/0/RSP0/CPU0:router(config-sonet)# end`<br>or<br>`RP/0/RSP0/CPU0:router(config-sonet)# commit` | Saves configuration changes.<br>• When you issue the **end** command, the system prompts you to commit changes:<br>`Uncommitted changes found, commit them before exiting(yes/no/cancel)? [cancel]:`<br>- Entering **yes** saves configuration changes to the running configuration file, exits the configuration session, and returns the router to EXEC mode.<br>- Entering **no** exits the configuration session and returns the router to EXEC mode without committing the configuration changes.<br>- Entering **cancel** leaves the router in the current configuration session without exiting or committing the configuration changes.<br>• Use the **commit** command to save the configuration changes to the running configuration file and remain within the configuration session. |

# Configuration Examples for SONET Controllers

This section contains the following examples:

## SONET Controller Configuration: Example

The following example shows the commands and output generated when you are performing the configuration of a SONET controllers following the steps outlined in the *Configuring a Clear Channel SONET Controller* section. This example shows the usage of every optional command, along with listings of options within commands where relevant. An actual configuration may or may not include all these commands.

```
configure
controller sonet 0/1/0/0
 ais-shut
 clock source internal
 framing sonet
 loopback internal
Loopback is a traffic-effecting operation
 overhead s1s0 1
```

```
 path ais-shut
 path delay trigger 0
 path overhead j1 line l1
 path report pais
 path scrambling disable
 path threshold b3-tca 6
 path uneq-shut
 report pais
 threshold b2-tca 4
 commit
```

# SONET APS Group Configuration: Example

The following example shows SONET Remote (two routers) APS configuration.

```
RP/0/0/CPU0:router(config)# aps group 1
 channel 0 local SONET 0/0/0/1
 channel 1 remote 172.18.69.123
 signalling sonet
 commit
show aps
show aps group 3
RP/0/0/CPU0:router(config)#
```

CHAPTER 14

# Configuring Clear Channel T3/E3 Controllers and Channelized T3 and T1/E1 Controllers

This module describes the configuration of clear channel T3/E3 controllers and channelized T3 and T1/E1 controllers.

You must configure the T3/E3 controller before you can configure an associated serial interface.

### Feature History for Configuring T3/E3 Controller Interfaces

| Release | Modification |
|---|---|
| Release 3.9.0 | This feature was introduced on the Cisco ASR 9000 Series Router for the Cisco 2-Port Channelized OC-12c/DS0 SPA. |
| Release 4.0.0 | Support for the following features was added on the Cisco 2-Port Channelized OC-12c/DS0 SPA:<br>• NxDS0 channelization<br>• Link Noise Monitoring<br><br>Support for clear channel T3 controllers on the 1-Port Channelized OC-48/STM-16 SPA was introduced. |
| Release 4.0.1 | Support for the following SPAs was added:<br>• Cisco 1-Port Channelized OC-3/STM-1 SPA<br>• Cisco 2-Port and 4-Port Clear Channel T3/E3 SPA |

| | |
|---|---|
| Release 4.1.0 | • Support for the following SPAs was added:<br>  • Cisco 4-Port Channelized T3/DS0 SPA<br>  • Cisco 8-Port Channelized T1/E1 SPA<br>• Support for a Link Noise Monitoring enhancement was added on the Cisco 2-Port Channelized OC-12c/DS0 SPA to set thresholds for noise errors on T1/E1 links that are used to signal the Noise Attribute to PPP for removal of an MLPPP bundle link. |


- Prerequisites for Configuring T3/E3 Controllers, on page 496
- Information About T3/E3 Controllers and Serial Interfaces, on page 497
- How to Configure Clear Channel T3/E3 Controllers and Channelized T1/E1 Controllers, on page 507
- Configuration Examples, on page 534


# Prerequisites for Configuring T3/E3 Controllers

You must be in a user group associated with a task group that includes the proper task IDs. The command reference guides include the task IDs required for each command. If you suspect user group assignment is preventing you from using a command, contact your AAA administrator for assistance.

Before configuring T3/E3 controllers, be sure that you have one of the following supported SPAs installed in the router:

- Cisco 2-Port and 4-Port Clear Channel T3/E3 SPA
- Cisco 4-Port Channelized T3/DS0 SPA

**Note** The 4-Port Channelized T3/DS0 SPA can run in clear channel mode, or it can be channelized into 28 T1 or 21 E1 controllers.

- Cisco 1-Port Channelized OC-3/STM-1 SPA
- Cisco 2-Port Channelized OC-12c/DS0 SPA
- Cisco 1-Port Channelized OC-48/STM-16 SPA
- Cisco 8-Port Channelized T1/E1 SPA
- Before you can configure a clear channel T3 controller on the channelized SONET SPAs, you must configure the SPA for an STS stream channelized for T3. For more information, see the Configuring Channelized SONET/SDH, on page 391 module.

# Information About T3/E3 Controllers and Serial Interfaces

The 2-Port and 4-Port Clear Channel T3/E3 SPAs support clear channel services over serial lines only. The 4-Port Channelized T3/DS0 SPA supports clear channel services and channelized serial lines.

If a controller is not channelized, then it is a clear channel controller, and the full bandwidth of its associated serial line is dedicated to a single channel that carries serial services.

When a T3 controller is channelized, it is logically divided into smaller bandwidth T1 or E1 controllers, depending on which mode of channelization you select. The sum of the bandwidth of the serial interfaces on the T1 or E1 controllers cannot exceed the bandwidth of the T3 controller that contains those channelized T1 or E1 controllers.

When you channelize a T3 controller, each individual T1 or E1 controller is automatically further channelized into DS0 time slots. A single T1 controller carries 24 DS0 time slots, and a single E1 controller carries 31 DS0 time slots. Users can divide these DS0 time slots up into individual channel groups. Each channel group can support a single serial interface.

When a controller is channelized, and channel groups have been created, services are provisioned on the associated serial interfaces.

The channelization feature in this release allows the following types of channelization:

- A single T3 controller into 28 T1 controllers, for a total controller size of 44210 kbps.
- A single T3 controller into 21 E1 controllers, for a total controller size of 43008 kbps.
- A single T1 controller supports up to 1.536 MB.
- A single E1 controller supports up to 2.048 MB.

**Note** A single shared port adapter (SPA) can support up to 448 channel groups.

This section includes the following additional topics:

**Supported Features**

This table shows a summary of some of the supported features by SPA type.

*Table 17: Supported Features on Channelized T3/E3, T1/E1, and Clear Channel SPAs*

| | **1-Port Channelized OC-3/STM-1 SPA** | **2-Port Channelized OC-12c/DS0 SPA** | **1-Port Channelized OC-48/STM-16 SPA** | **4-Port Channelized T3/DS0 SPA** | **8-Port Channelized T1/E1 SPA** | **2-Port and 4-Port Clear Channel T3/E3 SPA** |
|---|---|---|---|---|---|---|
| Bit Error Ratio Test (BERT) | T3, T1, E3, E1, and DS0 channels<br>Maximum of 12 sessionsFootnote.<br>Maximum 1 session for T1 | T3 channels | T3 and E3<br>Maximum of 2 simultaneous BERT tests are possible per STS-12. | T3, T1, E1 and DS0 channels | T1, E1, and DS0 channels | T3 and E3<br>1 session per port |
| Channelization and<br>Clear Channel Modes | Channelized SONET/SDH<br>Channelized T1/E1 to DS0s<br>Clear channel SONET<br>Clear channel T3 and E3 in SDH mode for serial interfaces | Channelized SONET/SDH<br>Channelized T3/E3<br>Channelized T1/E1 to DS0s<br>Clear channel SONET | Channelized SONET/SDH<br>Channelized T3/E3<br>Clear channel SONET | Channelized T3<br>Channelized T1/E1<br>T3 clear channel | Channelized T1/E1 to DS0s.<br>Clear channel T1 and E1 | Clear channel T3 or E3 only |
| DSU Modes | Adtran Digital-link Cisco Kentrox Larscom Verilink<br>For E3<br>Cisco (Default) Digital Link Kentrox | Adtran Digital-link Cisco Kentrox Larscom Verilink | Adtran Digital-link Cisco Kentrox Larscom Verilink<br>**Note** Subrate for E3 is not supported. | Adtran Digital-link Cisco Kentrox Larscom Verilink | Adtran Digital-link Cisco Kentrox Larscom Verilink | Adtran Digital-link Cisco Kentrox Larscom Verilink |
| Encapsulations | Frame Relay HDLC PPP | HDLC PPP | Frame Relay HDLC PPP | Frame Relay HDLC PPP | Frame Relay HDLC PPP | Frame Relay HDLC PPP |

| | 1-Port Channelized OC-3/STM-1 SPA | 2-Port Channelized OC-12c/DS0 SPA | 1-Port Channelized OC-48/STM-16 SPA | 4-Port Channelized T3/DS0 SPA | 8-Port Channelized T1/E1 SPA | 2-Port and 4-Port Clear Channel T3/E3 SPA |
|---|---|---|---|---|---|---|
| Equal Cost Multipath (ECMP) | Yes | ECMP support for egress paths over T3 or T1 speed channels with either PPP or HDLC encapsulation<br>ECMP support for paths on multiple controllers, SPAs, and SIPs | Yes | Yes | Yes | Yes |
| Facility Data Link (FDL) | Yes | Yes | Yes | Yes | Yes | No |
| Far End Alarm Control (FEAC) | For T3 C-bit framing | For T3 C-bit framing | For T3 C-bit framing | For T3 C-bit framing | | For T3 C-bit framing |
| Inter-Chassis Stateful Switchover (ICSSO)Footnote. | For PPP on T3, T1, and E1 channels only (not DS0)<br>For MLPPP on T1 and E1 sessions | For PPP on T3 channels<br>For T1 when T3 channels are configured on the same system, SIP, SPA or port | No | T3, T1, and E1 channels only (not DS0) | T1 and E1 channels only (not DS0) | No |
| IP Fast Reroute (IP-FRR) | No | For PPP only | No | T3, T1, and E1 channels | T1 and E1 channels | No |
| Link Noise Monitoring | No | Yes | No | No | No | No |
| LoopbackFootnote. | Yes | Yes | Yes | Yes—Not DS0 | Yes—Not DS0 | Yes |

| | 1-Port Channelized OC-3/STM-1 SPA | 2-Port Channelized OC-12c/DS0 SPA | 1-Port Channelized OC-48/STM-16 SPA | 4-Port Channelized T3/DS0 SPA | 8-Port Channelized T1/E1 SPA | 2-Port and 4-Port Clear Channel T3/E3 SPA |
|---|---|---|---|---|---|---|
| Maintenance Data Link (MDL) Message Support | Yes | Yes | Yes | Yes | N/A | Yes |
| Circuit Emulation Service Over Packet Switched Network Support | Yes | Yes | No | No | No | No |
| Mixed Channel Support | No—T3 and E3 cannot be mixed.<br>T1 and E1 cannot coexist on single STS-1. | Yes—T3 and T1 channels supported on the same SIP, SPA, or port | Yes | Yes | No—All channels must be either in T1 or E1 mode. | No—All ports must be either T3 or E3. |
| Scalability | 1000 channels per SPA | 48 T3 channels per SIP<br>24 T3 channels per SPA<br>12 T3 channels per interface | 48 T3/E3 channels | 1000 channels per SPA | 8 T1 or E1 ports<br>Up to 256 full-duplex HDLC channels<br>*N*x64 K channel speed for E1 where *N* is less than or equal to 32 AND *N*x64 K or *N*x56K channel speeds for T1, where *N* is less than or equal to 24. | 2 or 4 T3 or E3 ports |

[1] (1)
[2] (2)
[3] (3)

6 simultaneous BERT sessions among first three physical ports and 6 simultaneous BERT sessions on 4th port.

All interfaces configured on a SONET/SDH controller for the 1-Port Channelized OC-3/STM-1 SPA should be IC-SSO protected or none of them should be IC-SSO protected.

For detailed information about loopback support, see the “Loopback Support” section.

# Loopback Support

This section describes the types of loopback support on the 1-Port Channelized OC-3/STM-1 SPA.

### Cisco 1-Port Channelized OC-3/STM-1 SPA

This section describes the types of loopback supported on the 1-Port Channelized OC-3/STM-1 SPA:

- For SONET controller:
  - Local loopback
  - Network line loopback
- For T3:
  - Local loopback
  - Network loopback
  - Remote loopback line (Use FEAC in C-Bit mode for T3)
  - Remote loopback payload (Use FEAC in C-Bit mode for T3)
- For E3:
  - Local loopback
  - Network loopback
- For T1:
  - Local loopback
  - Network line loopback
  - Remote line FDL ANSI loopback (also known as Remote CSU loopback - ESF mode)
  - Remote line FDL Bellcore loopback (also known as Remote SmartJack loopback - ESF mode)
  - Remote line inband loopback (SF inband loopback)
  - Remote payload FDL ANSI loopback (ESF remote payload loopback)
- For E1:
  - Local loopback
  - Network line loopback

### Cisco 2-Port Channelized OC-12c/DS0 SPA

This section describes the types of loopback supported on the 2-Port Channelized OC-12c/DS0 SPA:

- For T3
  - Local loopback
  - Network line loopback
- For ports
  - Local line loopback
  - Network line loopback

### Cisco 1-Port Channelized OC-48/STM-16 SPA

This section describes the types of loopback supported on the 1-Port Channelized OC-48/STM-16 SPA:

- For SONET:
  - Local line loopback
  - Network line loopback
- For T3:
  - Local loopback
  - Network line loopback
  - Network payload loopback
- For E3:
  - Local loopback
  - Network loopback

### Cisco 4-Port Channelized T3/DS0 SPA

This section describes the types of loopback supported on the 4-Port Channelized T3/DS0 SPA:

- For T3:
  - Local loopback
  - Network loopback
  - Remote loopback line
- For T1:
  - Local loopback
  - Network line loopback
  - Remote line FDL ANSI loopback (also known as Remote CSU loopback - ESF mode)

    - Remote line FDL Bellcore loopback (also known as Remote SmartJack loopback - ESF mode)

- For E1:
    - Local loopback
    - Network line loopback

### Cisco 8-Port Channelized T1/E1 SPA

This section describes the types of loopback supported on the 8-Port Channelized T1/E1 SPA:

- For T1:
    - Local loopback
    - Networkl line loopback
    - Remote line FDL ANSI loopback (also known as Remote CSU loopback - ESF mode)
    - Remote line FDL Bellcore loopback (also known as Remote SmartJack loopback - ESF mode)
- For E1:
    - Local loopback

### Cisco 2-Port and 4-Port Clear Channel T3/E3 SPA

This section describes the types of loopback supported on the 2-Port and 4-Port Clear Channel T3/E3 SPA:

- Local loopback
- Network payload loopback (Configure the local framer to send all data received from the remote side back to the remote side.)
- Network line loopback (Configure the local LIU to send all data received from the remote side back to the remote side.)
- Remote line loopback (Use FEAC to request the remote interface to loop back to SPA—T3 only)

## Configuration Overview

Configuring a channelized T3 controller and its associated serial interfaces is a 4-step process:

1. Configure the T3 controller, and set the mode for that controller to T1 or E1.
2. Configure the T1 or E1 controller.
3. Create channel groups and assign DS0 time slots to these channel groups as desired.
4. Configure the serial interfaces that are associated with the individual channel groups, as described in the Configuring Serial Interfaces, on page 591 module later in this document.

# Default Configuration Values for T3 and E3 Controllers

This table describes the default configuration parameters that are present on the T3 and E3 controllers.

**Note**

- Auto-detect framing is not supported on the 2-Port Channelized OC-12c/DS0 SPA.
- E3 is not supported on the 4-Port Channelized T3/DS0 SPA.

*Table 18: T3 and E3 Controller Default Configuration Values*

| Parameter | Default Value | Configuration File Entry |
|---|---|---|
| Frame type for the data line | For T3: C-bit framing<br>For E3: G.751 | **framing** {**auto-detect** \| |
| Clocking for individual T3/E3 links | **internal** | **clock source** {**internal** \| **line**} |
| Cable length | 224 feet | **cablelength** *feet* |
| Maintenance data link (MDL) messages<br>(T3 only) | **disable** | **mdl transmit** {**idle-signal** \| **path** \| **test-signal**} {**disable** \| **enable**} |
| National reserved bits for an E3 port<br>(E3 only) | **enable**, and the bit pattern value is 1. | **national bits** {**disable** \| **enable**} |

**Note** When configuring clocking on a serial link, you must configure one end to be **internal**, and the other end to be **line**. If you configure **internal** clocking on both ends of a connection, framing slips occur. If you configure **line** clocking on both ends of a connection, the line does not come up.

# Default Configuration Values for T1 and E1 Controllers

This table describes the default configuration parameters that are present on the T1 and E1 controllers.

*Table 19: T1 and E1 Controller Default Configuration Values*

| Parameter | Default Value | Configuration File Entry |
|---|---|---|
| Frame type for the data line | For T1: extended superframe (**esf**)<br>For E1: framing with CRC-4 error monitoring capabilities (**crc4**). | For T1: **framing** {**sf** \| **esf**}<br>For E1: **framing** {**crc4 \| no-crc4 \| unframed** |

| Parameter | Default Value | Configuration File Entry |
|---|---|---|
| Detection and generation of T1 yellow alarms.<br>(T1 only) | Yellow alarms are detected and generated on the T1 channel. | **yellow** {**detection** \| **generation**} {**disable** \| **enable**} |
| Clocking for individual T1 and E1 links | **internal** | **clock source** {**internal** \| **line**} |
| Cable length<br>(T1 only) | For **cablelength long** command: *db-gain-value*: gain26; *db-loss-value*: 0db.<br>For **cablelength short** command: 533 feet. | To set a cable length of longer than 655 feet: **cablelength long** *db-gain-value db-loss-value*<br>To set a cable length of 655 feet or shorter: **cablelength short** *length* |
| Transmission of ANSI T1.403 or AT&T TR54016 once-per-second performance reports through Facility Data Link (FDL) for a T1 channel<br>(T1 only) | **disable** | **fdl** {**ansi** \| **att**} {**enable** \| **disable**} |
| National reserved bits for an E1 port<br>(E1 only) | 0 (which corresponds to *0x1f* in hexadecimal format) | **national bits** *bits* |

**Note** When configuring clocking on a serial link, you must configure one end to be **internal**, and the other end to be **line**. If you configure **internal** clocking on both ends of a connection, framing slips occur. If you configure **line** clocking on both ends of a connection, the line does not come up.

# Link Noise Monitoring on T1 or E1 Links

Link Noise Monitoring (LNM) provides the ability to monitor Path Code Violation (PCV) errors on T1 and E1 links on the 2-Port Channelized OC-12c/DS0 SPA on the Cisco ASR 9000 Series Router, and to signal events and alarms on these links when noise continuously meets or exceeds configured thresholds (the **set** threshold values) for those errors. Events are also signaled when noise falls below configured improved thresholds (the **clear** threshold values).

Beginning in Cisco IOS XR Release 4.1, the LNM feature supports the **lnm remove** command to signal the Noise Attribute to PPP to remove an MLPPP bundle member link when specified thresholds are crossed.

**Note** An LCV is an occurrence of either a Bi-Polar Violation (BPV) or Excessive Zeroes (EXZ) error, and a PCV is an occurrence of a CRC error in a timeslot. However, the LNM feature currently only monitors PCV errors. The LCV values are only used to calculate an expected PCV if the PCV values are not specified. If the PCV values are specified, then the LCV values are ignored.

## LNM Events

There are two basic types of monitoring events produced by LNM:

- Crossed events—A *crossed* event signals when PCV threshold values continuously meet or exceed the specified **set** values for major and minor warnings for a specified period of time (**duration**). When a crossed event occurs, the major or minor monitoring type for the controller is reported as the *alarm* state. When the crossed event is no longer present, the monitoring type returns to the *stable* state.

  The following are examples of crossed events:

```
RP/0/RSP0/CPU0:Router#0/1/CPU0:May 13 9:54:10.980 : g_spa_1[181]:
%L2-T1E1_LNM-3-MINWARNNOISE :
Interface T10/1/1/0/1/1/1, noise crossed minor warning threshold

RP/0/RSP0/CPU0:Router#0/1/CPU0:May 13 9:54:11.980 : g_spa_1[181]:
%L2-T1E1_LNM-3-MAJWARNNOISE :
Interface T10/1/1/0/1/1/1, noise crossed major warning threshold
```

- Cleared events—A *cleared* event signals when threshold values that were crossed have fallen below the specified **clear** values for major and minor warnings.

  The following are examples of cleared events:

```
RP/0/RSP0/CPU0:Router#LC/0/1/CPU0:May 13 10:27:25.809 : g_spa_1[181]:
%L2-T1E1_LNM-3-MAJWARNNOISE :
Interface T10/1/1/0/1/1/1, noise cleared major warning threshold

RP/0/RSP0/CPU0:Router#LC/0/1/CPU0:May 13 10:28:14.810 : g_spa_1[181]:
%L2-T1E1_LNM-3-MINWARNNOISE :
Interface T10/1/1/0/1/1/1, noise cleared minor warning threshold
```

## LNM Logging

When you enable syslog messages for LNM events using the **lnm syslog** command, LNM messages will appear in both the system log and in the log events buffer. You can display LNM events in the log events buffer using the **show logging events buffer bistate-alarms-set** command, and also using the show logging command, which are described in the *Cisco ASR 9000 Series Aggregation Services Router System Monitoring Command Reference.*

LNM supports hierarchical level alarm reporting as defined in the Telcordia (Bellcore) GR-253 standard. Hierarchical alarm reporting means that whenever a higher alarm is asserted, the lower alarm state is suppressed. When the high alarm is cleared, the lower alarm will re-assert if the condition still exists.

For LNM, this means that if a major warning threshold is continuously met or exceeded resulting in a crossed event and alarm state, then a minor warning alarm state is suppressed and returned to stable state. The minor crossed event also is removed from the bistate log. When the major warning is cleared, the minor warning alarm is asserted if the condition still exists.

Only a single crossed event for major warnings will appear in the bistate log for the controller. Therefore, you will see only a single log message for a controller if noise exists above configured threshold values.

# How to Configure Clear Channel T3/E3 Controllers and Channelized T1/E1 Controllers

The T3/E3 controllers are configured in the physical layer control element of the Cisco IOS XR software configuration space. This configuration is described in the following tasks:

## Configuring a Clear Channel E3 Controller

**Before you begin**

**Restrictions**

- If you configure an option that is not valid for your controller type, you receive an error when you commit the configuration.
- A single SPA cannot support a mixture of T3 and E3 interfaces.
- E3 is not supported on the 4-Port Channelized T3/DS0 SPA.

### SUMMARY STEPS

1. **configure**
2. **controller e3** *interface-path-id*
3. **mode serial**
4. **no shutdown**
5. **end** or **commit**
6. **show controllers e3** *interface-path-id*

### DETAILED STEPS

| | Command or Action | Purpose |
|---|---|---|
| **Step 1** | **configure**<br>**Example:**<br>`RP/0/RSP0/CPU0:router# configure` | Enters global configuration mode. |
| **Step 2** | **controller e3** *interface-path-id*<br>**Example:**<br>`RP/0/RSP0/CPU0:router(config)# controller t3 0/1/0/0` | Specifies the E3 controller name in the notation *rack/slot/module/port* and enters E3 configuration mode. |
| **Step 3** | **mode serial**<br>**Example:**<br>`RP/0/RSP0/CPU0:router(config-e3)# mode serial` | Configures the mode of the port to be clear channel serial.<br>**Note** • This step is required for the 2-Port and 4-Port Channelized T3 SPA only. The 2-Port and 4-Port Clear Channel T3/E3 SPA run in serial mode by default. |

| | Command or Action | Purpose |
|---|---|---|
| **Step 4** | **no shutdown**<br>**Example:**<br>`RP/0/RSP0/CPU0:router(config-e3)# no shutdown` | Removes the shutdown configuration.<br>• The removal of the shutdown configuration removes the forced administrative down on the controller, enabling the controller to move to an up or a down state. |
| **Step 5** | **end** or **commit**<br>**Example:**<br>`RP/0/RSP0/CPU0:router(config-e3)# end`<br>or<br>`RP/0/RSP0/CPU0:router(config-e3)# commit` | Saves configuration changes.<br>• When you issue the **end** command, the system prompts you to commit changes:<br>`Uncommitted changes found, commit them before exiting(yes/no/cancel)? [cancel]:`<br>- Entering **yes** saves configuration changes to the running configuration file, exits the configuration session, and returns the router to EXEC mode.<br>- Entering **no** exits the configuration session and returns the router to EXEC mode without committing the configuration changes.<br>- Entering **cancel** leaves the router in the current configuration session without exiting or committing the configuration changes.<br>• Use the **commit** command to save the configuration changes to the running configuration file and remain within the configuration session. |
| **Step 6** | **show controllers e3** *interface-path-id*<br>**Example:**<br>`RP/0/RSP0/CPU0:router# show controllers e3 0/1/0/0` | (Optional) Displays information about the E3 controllers. |

### What to do next

- Modify the default configuration that is running on the E3 controller you just configured, as described in the “Modifying the Default E3 Controller Configuration” section later in this module.
- Configure a bit error rate test (BERT) on the controller to test its integrity, as described in the “Configuring BERT” section later in this module.
- Configure the associated serial interface, as described in the Configuring Serial Interfaces on the Cisco ASR 9000 Series Router module later in this document.

# Modifying the Default E3 Controller Configuration

**Restrictions**

- E3 is not supported on the 4-Port Channelized T3/DS0 SPA.

This task explains how to modify the default E3 controller configuration, which is described in the "Default Configuration Values for T3 and E3 Controllers" section earlier in this module.

## SUMMARY STEPS

1. **configure**
2. **controller e3** *interface-path-id*
3. **clock source {internal | line}**
4. **cablelength** *feet*
5. **framing {g751 | g832}**
6. **national bits** {**disable** | **enable**}
7. **no shutdown**
8. **end** or **commit**
9. **show controllers e3** *interface-path-id*

## DETAILED STEPS

| | Command or Action | Purpose |
|---|---|---|
| **Step 1** | **configure**<br>**Example:**<br>`RP/0/RSP0/CPU0:router# configure` | Enters global configuration mode. |
| **Step 2** | **controller e3** *interface-path-id*<br>**Example:**<br>`RP/0/RSP0/CPU0:router(config)# controller t3 0/1/0/0` | Specifies the E3 controller name in the notation *rack/slot/module/port* and enters E3 configuration mode. |
| **Step 3** | **clock source {internal \| line}**<br>**Example:**<br>`RP/0/RSP0/CPU0:router(config-e3)# clock source internal` | (Optional) Sets the clocking for individual E3 links.<br>**Note** • The default clock source is **internal**.<br>• When configuring clocking on a serial link, you must configure one end to be **internal**, and the other end to be **line**. If you configure **internal** clocking on both ends of a connection, framing slips occur. If you configure **line** clocking on both ends of a connection, the line does not come up. |
| **Step 4** | **cablelength** *feet*<br>**Example:** | (Optional) Specifies the distance of the cable from the router to the network equipment. |

| | Command or Action | Purpose |
|---|---|---|
| | `RP/0/RSP0/CPU0:router(config-e3)# cablelength 250` | **Note** • The default cable length is 224 feet. |
| **Step 5** | **framing {g751 \| g832}**<br>**Example:**<br>`RP/0/RSP0/CPU0:router(config-e3)# framing g832` | (Optional) Selects the frame type for the E3 port. Possible E3 frame types are G.751 and G.832.<br>**Note** • The default framing for E3 is G.751. |
| **Step 6** | **national bits** {**disable** \| **enable**}<br>**Example:**<br>`RP/0/RSP0/CPU0:router(config-e3)# national bits enable` | (Optional) Enables or disables the 0x1F national reserved bit pattern on the E3 port.<br>**Note** • The E3 national bit is enabled by default, and the bit pattern value is 1. |
| **Step 7** | **no shutdown**<br>**Example:**<br>`RP/0/RSP0/CPU0:router(config-e3)# no shutdown` | Removes the shutdown configuration.<br>• The removal of the shutdown configuration removes the forced administrative down on the controller, enabling the controller to move to an up or a down state. |
| **Step 8** | **end** or **commit**<br>**Example:**<br>`RP/0/RSP0/CPU0:router(config-e3)# end`<br>or<br>`RP/0/RSP0/CPU0:router(config-e3)# commit` | Saves configuration changes.<br>• When you issue the **end** command, the system prompts you to commit changes:<br>`Uncommitted changes found, commit them before exiting(yes/no/cancel)? [cancel]:`<br>- Entering **yes** saves configuration changes to the running configuration file, exits the configuration session, and returns the router to EXEC mode.<br>- Entering **no** exits the configuration session and returns the router to EXEC mode without committing the configuration changes.<br>- Entering **cancel** leaves the router in the current configuration session without exiting or committing the configuration changes.<br>• Use the **commit** command to save the configuration changes to the running configuration file and remain within the configuration session. |
| **Step 9** | **show controllers e3** *interface-path-id*<br>**Example:**<br>`RP/0/RSP0/CPU0:router# show controllers e3 0/1/0/0` | (Optional) Displays information about the E3 controllers. |

### What to do next

- Modify the default configuration that is running on the T3 controller you just configured, as described in the "Modifying the Default T3 Controller Configuration" section later in this module.
- Configure BERT on the controller to test its integrity, as described in the "Configuring BERT" section later in this module.
- Configure the associated serial interface, as described in the *Configuring Serial Interfaces on the Cisco ASR 9000 Series Router* module later in this document.

# Configuring a Clear Channel T3 Controller

### Before you begin

Before you can configure a clear channel T3 controller on a channelized SPA, you must configure the SPA for an STS stream channelized for T3. For more information, see the Configuring Channelized SONET/SDH on Cisco XR Software Cisco ASR 9000 Series Router module.

**Restrictions**

- If you configure an option that is not valid for your controller type, you receive an error when you commit the configuration.
- A single SPA cannot support a mixture of T3 and E3 interfaces.

## SUMMARY STEPS

1. **configure**
2. **controller t3** *interface-path-id*
3. **mode serial**
4. **no shutdown**
5. **end** or **commit**
6. **show controllers t3** *interface-path-id*

## DETAILED STEPS

| | Command or Action | Purpose |
|---|---|---|
| **Step 1** | **configure**<br>**Example:**<br>`RP/0/RSP0/CPU0:router# configure` | Enters global configuration mode. |
| **Step 2** | **controller t3** *interface-path-id*<br>**Example:**<br>`RP/0/RSP0/CPU0:router(config)# controller t3 0/1/0/0` | Specifies the T3 controller name in the *rack/slot/module/port* notation and enters T3 configuration mode. |

| | Command or Action | Purpose |
|---|---|---|
| **Step 3** | **mode serial**<br>**Example:**<br>`RP/0/RSP0/CPU0:router(config-t3)# mode serial` | Configures the mode of the port to be clear channel serial. |
| **Step 4** | **no shutdown**<br>**Example:**<br>`RP/0/RSP0/CPU0:router(config-t3)# no shutdown` | Removes the shutdown configuration.<br>• The removal of the shutdown configuration removes the forced administrative down on the controller, enabling the controller to move to an up or a down state. |
| **Step 5** | **end** or **commit**<br>**Example:**<br>`RP/0/RSP0/CPU0:router(config-t3)# end`<br>or<br>`RP/0/RSP0/CPU0:router(config-t3)# commit` | Saves configuration changes.<br>• When you issue the **end** command, the system prompts you to commit changes:<br>`Uncommitted changes found, commit them before exiting(yes/no/cancel)? [cancel]:`<br>- Entering **yes** saves configuration changes to the running configuration file, exits the configuration session, and returns the router to EXEC mode.<br>- Entering **no** exits the configuration session and returns the router to EXEC mode without committing the configuration changes.<br>- Entering **cancel** leaves the router in the current configuration session without exiting or committing the configuration changes.<br>• Use the **commit** command to save the configuration changes to the running configuration file and remain within the configuration session. |
| **Step 6** | **show controllers t3** *interface-path-id*<br>**Example:**<br>`RP/0/RSP0/CPU0:router# show controllers t3 0/1/0/0` | (Optional) Displays information about the T3 controllers. |

### What to do next

- Modify the default configuration that is running on the T3 controller you just configured, as described in the “Modifying the Default T3 Controller Configuration” section later in this module.
- Configure BERT on the controller to test its integrity, as described in the “Configuring BERT” section later in this module.

- Configure the associated serial interface, as described in the Configuring Serial Interfaces on the Cisco ASR 9000 Series Router module.
- When a T3 controller is in clear channel mode, it carries a single serial interface.
- The T3 controllers are configured in the T3 configuration mode.

# Configuring a Channelized T3 Controller

The SPAs that support channelized T3 support channelization to T1, E1, and DS0. The steps in this section describe how to channelize a single T3 controller into 28 T1 controllers or 21 E1 controllers. Once you have created T1 or E1 controllers, you can further channelize those controllers into DS0 time slots, as described in the following sections:

- Configuring a T1 Controller
- Configuring an E1 Controller

Each individual T1 controller supports a total of 24 DS0 time slots, and each individual E1 controller supports a total of 31 DS0 time slots.

### Before you begin

Before you configure a channelized T3 controller, be sure that the following requirements are met:

- You have one of the following SPAs installed:
  - 1-Port Channelized OC-3/STM-1 SPA
  - 2-Port Channelized OC-12/DS0 SPA
  - 4-Port Channelized T3/DS0 SPA
- For the channelized SONET SPAs, you have configured the SPA for an STS stream channelized for T3. For more information, see the Configuring Channelized SONET/SDH, on page 391 module.

**Note** If you configure an option that is not valid for your controller type, you receive an error when you commit the configuration.

### SUMMARY STEPS

1. **configure**
2. **controller T3** *interface-path-id*
3. **mode t1**
4. **no shutdown**
5. **end** or **commit**
6. **show controllers t3** *interface-path-id*

## DETAILED STEPS

| | Command or Action | Purpose |
|---|---|---|
| **Step 1** | **configure**<br>**Example:**<br>`RP/0/RSP0/CPU0:router# configure` | Enters global configuration mode. |
| **Step 2** | **controller T3** *interface-path-id*<br>**Example:**<br>`RP/0/RSP0/CPU0:router(config)# controller t3 0/1/0/0` | Specifies the T3 controller name in the notation *rack/slot/module/port* and enters T3 configuration mode. |
| **Step 3** | **mode t1**<br>**Example:**<br>`RP/0/RSP0/CPU0:router(config-t3)# mode t1` | Sets the mode of the channelized controllers to be T1, and creates 28 T1 controllers. |
| **Step 4** | **no shutdown**<br>**Example:**<br>`RP/0/RSP0/CPU0:router(config-t3)# no shutdown` | Removes the shutdown configuration.<br>• The removal of the shutdown configuration removes the forced administrative down on the controller, enabling the controller to move to an up or a down state. |
| **Step 5** | **end** or **commit**<br>**Example:**<br>`RP/0/RSP0/CPU0:router(config-t3)# end`<br>or<br>`RP/0/RSP0/CPU0:router(config-t3)# commit` | Saves configuration changes.<br>• When you issue the **end** command, the system prompts you to commit changes:<br>`Uncommitted changes found, commit them before exiting(yes/no/cancel)? [cancel]:`<br>- Entering **yes** saves configuration changes to the running configuration file, exits the configuration session, and returns the router to EXEC mode.<br>- Entering **no** exits the configuration session and returns the router to EXEC mode without committing the configuration changes.<br>- Entering **cancel** leaves the router in the current configuration session without exiting or committing the configuration changes.<br>• Use the **commit** command to save the configuration changes to the running configuration file and remain within the configuration session. |
| **Step 6** | **show controllers t3** *interface-path-id*<br>**Example:** | (Optional) Displays information about the T3 controllers. |

| | Command or Action | Purpose |
|---|---|---|
| | `RP/0/RSP0/CPU0:router# show controllers t3 0/1/0/0` | |

### What to do next

- Modify the default configuration that is running on the T3 controller you just configured, as described in the "Modifying the Default T3 Controller Configuration" section on page 464.
- If you channelized your T3 controller into 28 T1 controllers, configure the T1 controllers and assign DS0 time slots to them, as described in the "Configuring a T1 Controller" section on page 466.
- If you channelized your T3 controller into 21 E1 controllers, configure the E1 controllers and assign DS0 time slots to them, as described in the "Configuring an E1 Controller" section on page 470.

# Modifying the Default T3 Controller Configuration

This task explains how to modify the default T3 controller configuration, which is described in the Default Configuration Values for T3 and E3 Controllers section.

### Before you begin

You must configure a clear channel or channelized T3 controller, as described in one of the following sections:

- Configuring a Clear Channel T3 Controller
- Configuring a Channelized T3 Controller

## SUMMARY STEPS

1. **configure**
2. **controller T3** *interface-path-id*
3. **clock source {internal | line}**
4. **cablelength** *feet*
5. **framing** {**auto-detect** | **c-bit** | **m23**}
6. **mdl transmit** {**idle-signal** | **path** | **test-signal**} {**disable** | **enable**}
7. **mdl string** {**eic** | **fi** | **fic** | **gen-number** | **lic** | **port-number** | **unit**} *string*
8. **no shutdown**
9. **end** or **commit**
10. **show controllers t3** *interface-path-id*

## DETAILED STEPS

| | Command or Action | Purpose |
|---|---|---|
| **Step 1** | **configure**<br>**Example:**<br>`RP/0/RSP0/CPU0:router# configure` | Enters global configuration mode. |

| | Command or Action | Purpose |
|---|---|---|
| **Step 2** | **controller T3** *interface-path-id*<br>**Example:**<br>`RP/0/RSP0/CPU0:router(config)# controller t3 0/1/0/0` | Specifies the T3 controller name in the notation *rack/slot/module/port* and enters T3 configuration mode. |
| **Step 3** | **clock source {internal \| line}**<br>**Example:**<br>`RP/0/RSP0/CPU0:router(config-t3)# clock source internal` | (Optional) Sets the clocking for the T3 port.<br>**Note** • The default clock source is **internal**.<br>• When configuring clocking on a serial link, you must configure one end to be **internal**, and the other end to be **line**. If you configure **internal** clocking on both ends of a connection, framing slips occur. If you configure **line** clocking on both ends of a connection, the line does not come up. |
| **Step 4** | **cablelength** *feet*<br>**Example:**<br>`RP/0/RSP0/CPU0:router(config-t3)# cablelength 250` | (Optional) Specifies the distance of the cable from the router to the network equipment.<br>**Note** • The default cable length is 224 feet. |
| **Step 5** | **framing** {**auto-detect** \| **c-bit** \| **m23**}<br>**Example:**<br>`RP/0/RSP0/CPU0:router(config-t3)# framing c-bit` | (Optional) Selects the frame type for the T3 port.<br>**Note** • The default frame type for T3 is C-bit. Auto-detect is not supported on the 2-Port Channelized OC-12c/DS0 SPA. |
| **Step 6** | **mdl transmit** {**idle-signal** \| **path** \| **test-signal**} {**disable** \| **enable**}<br>**Example:**<br>`RP/0/RSP0/CPU0:router(config-t3)# mdl transmit path enable` | (Optional) Enables Maintenance Data Link (MDL) messages on the T3 port.<br>**Note** • MDL messages are supported only when the T3 framing is C-bit parity.<br>• MDL message are disabled by default. |
| **Step 7** | **mdl string** {**eic** \| **fi** \| **fic** \| **gen-number** \| **lic** \| **port-number** \| **unit**} *string*<br>**Example:**<br>`RP/0/RSP0/CPU0:router(config-t3)# mdl fi facility identification code` | (Optional) Specifies the values of the strings sent in the MDL messages. |
| **Step 8** | **no shutdown**<br>**Example:**<br>`RP/0/RSP0/CPU0:router(config-t3)# no shutdown` | Removes the shutdown configuration.<br>• The removal of the shutdown configuration removes the forced administrative down on the controller, |

| | Command or Action | Purpose |
|---|---|---|
| | | enabling the controller to move to an up or a down state. |
| **Step 9** | **end** or **commit**<br>**Example:**<br>`RP/0/RSP0/CPU0:router(config-t3)# end`<br>or<br>`RP/0/RSP0/CPU0:router(config-t3)# commit` | Saves configuration changes.<br>• When you issue the **end** command, the system prompts you to commit changes:<br>`Uncommitted changes found, commit them before exiting(yes/no/cancel)? [cancel]:`<br>- Entering **yes** saves configuration changes to the running configuration file, exits the configuration session, and returns the router to EXEC mode.<br>- Entering **no** exits the configuration session and returns the router to EXEC mode without committing the configuration changes.<br>- Entering **cancel** leaves the router in the current configuration session without exiting or committing the configuration changes.<br>• Use the **commit** command to save the configuration changes to the running configuration file and remain within the configuration session. |
| **Step 10** | **show controllers t3** *interface-path-id*<br>**Example:**<br>`RP/0/RSP0/CPU0:router# show controllers t3 0/1/0/0` | (Optional) Displays information about the T3 controllers. |

### What to do next

- If you configured a clear channel T3 controller, perform the following tasks:
  - Configure BERT on the controller to test its integrity, as described in the “Configuring BERT” section on page 474 later in this module.
  - Configure the associated serial interface, as described in the *Configuring Serial Interfaces on the Cisco ASR 9000 Series Router* module.
- If you channelized your T3 controller into 28 T1 controllers, configure the T1 controllers and assign DS0 time slots to them, as described in the “Configuring a T1 Controller” section on page 466.
- If you channelized your T3 controller into 21 E1 controllers, configure the E1 controllers and assign DS0 time slots to them, as described in the “Configuring an E1 Controller” section on page 470.

# Configuring a T1 Controller

This task describes how to configure an individual T1 controller and channelize it into 24 individual DS0 timeslots.

### Before you begin

Before you configure a T1 controller, be sure that the following requirements are met:

- You have one of the following SPAs installed:
  - 1-Port Channelized OC-3/STM-1 SPA
  - 2-Port Channelized OC-12/DS0 SPA
  - 4-Port Channelized T3/DS0 SPA
  - 8-Port Channelized T1/E1 SPA
- If you have a 1-Port Channelized OC-3/STM-1 SPA or 2-Port Channelized OC-12/DS0 SPA, you must complete the following configuration:
  - Configure an STS stream channelized for T3. For more information, see the Configuring Channelized SONET/SDH, on page 391 module.
  - Configure a channelized T3 controller running in T1 mode, as described in the Configuring a Channelized T3 Controller.
- If you have a 4-Port Channelized T3/DS0 SPA, you must configure a channelized T3 controller to run in T1 mode, as described in the Configuring a Channelized T3 Controller.

### Restrictions

If you configure an option that is not valid for your controller type, you receive an error when you commit the configuration.

Before you configure a T1 controller on the 8-Port Channelized T1/E1 SPA, consider the following restrictions:

## SUMMARY STEPS

1. **show controllers t1** *interface-path-id*
2. **configure**
3. **controller t1** *interface-path-id*
4. **framing** {**sf** | **esf**
5. **yellow** {**detection** | **generation**} {**disable** | **enable**
6. **clock source** {**internal** | **line**
7. **fdl** {**ansi** | **att**} {**enable** | **disable**
8. **no shutdown**
9. **channel-group** *channel-group-number*
10. **timeslots** *range*
11. **speed** *kbps*
12. **exit**
13. Repeat Step 9 through Step 12 to assign time slots to a channel group. Each controller can contain up to 24 time slots.

14. **exit**
15. Repeat Step 2 through Step 14 to assign more channel groups to a controller as desired.
16. **end** or **commit**

## DETAILED STEPS

| | Command or Action | Purpose |
|---|---|---|
| **Step 1** | **show controllers t1** *interface-path-id*<br>**Example:**<br>`RP/0/RSP0/CPU0:router# show controllers t3 0/1/0/0` | (Optional) Displays information about the T1 controllers you created in Step 3. |
| **Step 2** | **configure**<br>**Example:**<br>`RP/0/RSP0/CPU0:router# configure` | Enters global configuration mode. |
| **Step 3** | **controller t1** *interface-path-id*<br>**Example:**<br>`RP/0/RSP0/CPU0:router(config)# controller t1 0/3/0/0/0` | Enters T1 configuration mode. |
| **Step 4** | **framing** {**sf** \| **esf**<br>**Example:**<br>`RP/0/RSP0/CPU0:router(config-t1)# framing esf` | (Optional) Selects the frame type for the T1 data line:<br>• **sf**—Superframe<br>• **esf**—Extended super frame |
| **Step 5** | **yellow** {**detection** \| **generation**} {**disable** \| **enable**<br>**Example:**<br>`RP/0/RSP0/CPU0:router(config-t1e1)# yellow detection enable` | (Optional) Enables or disables the detection and generation of T1 yellow alarms.<br>Yellow alarms are detected and generated on the T1 channel by default. |
| **Step 6** | **clock source** {**internal** \| **line**<br>**Example:**<br>`RP/0/RSP0/CPU0:router(config-t1e1)# clock source internal` | (Optional) Sets the clocking for individual T1 links.<br>The default clock source is **internal**.<br>When configuring clocking on a serial link, you must configure one end to be **internal**, and the other end to be **line**. If you configure **internal** clocking on both ends of a connection, framing slips occur. If you configure **line** clocking on both ends of a connection, the line does not come up. |
| **Step 7** | **fdl** {**ansi** \| **att**} {**enable** \| **disable**<br>**Example:**<br>`RP/0/RSP0/CPU0:router(config-t1e1)# fdl ansi enable` | (Optional) Enables the transmission of ANSI T1.403 or AT&T TR54016 once-per-second performance reports through Facility Data Link (FDL).<br>FDL ansi and att are disabled by default. |

| | Command or Action | Purpose |
|---|---|---|
| **Step 8** | **no shutdown**<br>**Example:**<br>`RP/0/RSP0/CPU0:router(config-t1e1)# no shutdown` | Removes the shutdown configuration.<br>• The removal of the shutdown configuration removes the forced administrative down on the controller, enabling the controller to move to an up or a down state. |
| **Step 9** | **channel-group** *channel-group-number*<br>**Example:**<br>`RP/0/RSP0/CPU0:router(config-t1)# channel-group 0` | Creates a T1 channel group and enters channel group configuration mode for that channel group. |
| **Step 10** | **timeslots** *range*<br>**Example:**<br>`RP/0/RSP0/CPU0:router(config-t1-channel_group)# timeslots 7-12` | Associates DS0 time slots to a channel group and creates an associated serial subinterface on that channel group.<br>• Range is from 1 to 24 time slots.<br>• You can assign all 24 time slots to a single channel group, or you can divide the time slots among several channel groups.<br>**Note** Each individual T1 controller supports a total of 24 DS0 time slots. |
| **Step 11** | **speed** *kbps*<br>**Example:**<br>`RP/0/RSP0/CPU0:router(config-t1e1-channel_group)# speed 64` | (Optional) Specifies the speed of the DS0s in kilobits per second. Valid values are 56 and 64.<br>The default speed is 64 kbps. |
| **Step 12** | **exit**<br>**Example:**<br>`RP/0/RSP0/CPU0:router(config-t1-channel_group)# exit` | Exits channel group configuration mode. |
| **Step 13** | Repeat Step 9 through Step 12 to assign time slots to a channel group. Each controller can contain up to 24 time slots. | — |
| **Step 14** | **exit**<br>**Example:**<br>`RP/0/RSP0/CPU0:router(config-t1)# exit` | Exits T1 configuration mode and enters global configuration mode. |
| **Step 15** | Repeat Step 2 through Step 14 to assign more channel groups to a controller as desired. | — |
| **Step 16** | **end** or **commit**<br>**Example:** | Saves configuration changes. |

| | Command or Action | Purpose |
|---|---|---|
| | `RP/0/RSP0/CPU0:router(config-sonet)# end`<br>or<br>`RP/0/RSP0/CPU0:router(config-sonet)# commit` | • When you issue the **end** command, the system prompts you to commit changes:<br>`Uncommitted changes found, commit them before exiting(yes/no/cancel)? [cancel]:`<br>- Entering **yes** saves configuration changes to the running configuration file, exits the configuration session, and returns the router to EXEC mode.<br>- Entering **no** exits the configuration session and returns the router to EXEC mode without committing the configuration changes.<br>- Entering **cancel** leaves the router in the current configuration session without exiting or committing the configuration changes.<br>• Use the **commit** command to save the configuration changes to the running configuration file and remain within the configuration session. |

# Configuring an E1 Controller

This task describes how to configure an individual E1 controller and channelize it into 31 individual DS0 timeslots.

### Before you begin

Before you configure an E1 controller, be sure that the following requirements are met:

- You have one of the following SPAs installed:
  - 1-Port Channelized OC-3/STM-1 SPA
  - 2-Port Channelized OC-12/DS0 SPA
  - 4-Port Channelized T3/DS0 SPA
  - 8-Port Channelized T1/E1 SPA
- If you have a 1-Port Channelized OC-3/STM-1 SPA or 2-Port Channelized OC-12/DS0 SPA, you must complete the following configuration:
  - Configure an STS stream channelized for T3. For more information, see the Configuring Channelized SONET/SDH, on page 391 module.
  - Configure a channelized T3 controller running in E1 mode, as described in the Configuring a Channelized T3 Controller.
- If you have a 4-Port Channelized T3/DS0 SPA, you must configure a channelized T3 controller to run in E1 mode, as described in the Configuring a Channelized T3 Controller.

### Restrictions

If you configure an option that is not valid for your controller type, you receive an error when you commit the configuration.

Before you configure an E1 controller on the 8-Port Channelized T1/E1 SPA, consider the following restrictions:

- The SPA controller is not visible until it is explicitly configured for E1 mode.
- For each individual SPA, the SPA ports must all be in the same mode (all E1).

## SUMMARY STEPS

1. **show controllers e1** *interface-path-id*
2. **configure**
3. **controller e1** *interface-path-id*
4. **clock source** {**internal** | **line**}
5. **framing** {**crc4** | **no-crc4** | **unframed**}
6. **national bits** *bits*
7. **no shutdown**
8. **channel-group** *channel-group-number*
9. **timeslots** *range*
10. **exit**
11. Repeat Step 8 through Step 11 to assign time slots to a channel group.
12. **exit**
13. Repeat Step 2 through Step 13 to assign more channel groups to a controller as desired.
14. **end** or **commit**

## DETAILED STEPS

| | Command or Action | Purpose |
|---|---|---|
| **Step 1** | **show controllers e1** *interface-path-id*<br>**Example:**<br>`RP/0/RSP0/CPU0:router# show controllers e1 0/1/0/0` | (Optional) Displays information about the E1 controllers. |
| **Step 2** | **configure**<br>**Example:**<br>`RP/0/RSP0/CPU0:router# configure` | Enters global configuration mode. |
| **Step 3** | **controller e1** *interface-path-id*<br>**Example:**<br>`RP/0/RSP0/CPU0:router(config)# controller e1 0/3/0/0/0` | Enters E1 configuration mode. |
| **Step 4** | **clock source** {**internal** \| **line**}<br>**Example:** | (Optional) Sets the clocking for individual E1 links. |

| | Command or Action | Purpose |
|---|---|---|
| | `RP/0/RSP0/CPU0:router(config-e1)# clock source internal` | **Note** • The default clock source is **internal**.<br>• When configuring clocking on a serial link, you must configure one end to be **internal**, and the other end to be **line**. If you configure **internal** clocking on both ends of a connection, framing slips occur. If you configure **line** clocking on both ends of a connection, the line does not come up. |
| **Step 5** | **framing** {**crc4** \| **no-crc4** \| **unframed**}<br>**Example:**<br>`RP/0/RSP0/CPU0:router(config-e1)# framing unframed` | (Optional) Selects the frame type for the E1 data line. The following frame types are valid for E1:<br>• **crc4**—Framing with CRC-4 error monitoring capabilities<br>• **no-crc4**—Framing without CRC-4 error monitoring capabilities<br>• **unframed**—Unframed E1<br>**Note** • The default frame type for E1 is **crc4**. |
| **Step 6** | **national bits** *bits*<br>**Example:**<br>`RP/0/RSP0/CPU0:router(config-e1)# national bits 10` | (Optional) Specifies the national reserved bits for an E1 port. Range is from 0 to 31.<br>**Note** • The default bit pattern is 0, which corresponds to the hexadecimal value *0x1f*. |
| **Step 7** | **no shutdown**<br>**Example:**<br>`RP/0/RSP0/CPU0:router(config-e1)# no shutdown` | Removes the shutdown configuration.<br>• The removal of the shutdown configuration removes the forced administrative down on the controller, enabling the controller to move to an up or a down state. |
| **Step 8** | **channel-group** *channel-group-number*<br>**Example:**<br>`RP/0/RSP0/CPU0:router(config-e1)# channel-group 0` | Creates an E1 channel group and enters channel group configuration mode for that channel group. |
| **Step 9** | **timeslots** *range*<br>**Example:**<br>`RP/0/RSP0/CPU0:router(config-e1-channel_group)# timeslots 1-16` | Associates one or more time slots to a channel group and creates an associated serial subinterface on that channel group.<br>• Range is from 1 to 31 time slots. |

| | Command or Action | Purpose |
|---|---|---|
| | | • You can assign all 31 time slots to a single channel group, or you can divide the time slots among several channel groups.<br>**Note** • Each E1 controller supports a total of 31 DS0 time slots. |
| **Step 10** | **exit**<br>**Example:**<br>`RP/0/RSP0/CPU0:router(config-e1-channel_group)# exit` | Exits channel group configuration mode |
| **Step 11** | Repeat Step 8 through Step 11 to assign time slots to a channel group. | — |
| **Step 12** | **exit**<br>**Example:**<br>`RP/0/RSP0/CPU0:router(config-e1)# exit` | Exits E1 configuration mode |
| **Step 13** | Repeat Step 2 through Step 13 to assign more channel groups to a controller as desired. | — |
| **Step 14** | **end** or **commit**<br>**Example:**<br>`RP/0/RSP0/CPU0:router(config-e3)# end`<br>or<br>`RP/0/RSP0/CPU0:router(config-e3)# commit` | Saves configuration changes.<br>• When you issue the **end** command, the system prompts you to commit changes:<br>`Uncommitted changes found, commit them before exiting(yes/no/cancel)? [cancel]:`<br>- Entering **yes** saves configuration changes to the running configuration file, exits the configuration session, and returns the router to EXEC mode.<br>- Entering **no** exits the configuration session and returns the router to EXEC mode without committing the configuration changes.<br>- Entering **cancel** leaves the router in the current configuration session without exiting or committing the configuration changes.<br>• Use the **commit** command to save the configuration changes to the running configuration file and remain within the configuration session. |

### What to do next

- Configure BERT on the controller to test its integrity, as described in the "Configuring BERT" section on page 474 in this module.
- Configure the associated serial interface, as described in the *Configuring Serial Interfaces on the Cisco ASR 9000 Series Router* module later in this document.

# Configuring BERT

Depending on your hardware support, BERT is supported on each of the T3/E3 or T1/E1 controllers, and on the DS0 channel groups. It is done only over an unframed T3/E3 or T1/E1 signal and is run on only one port at a time. It is also supported on individual channel groups.

To view the BERT results, use the **show controllers t1** or **show controllers t3** command in EXEC mode. The BERT results include the following information:

- Type of test pattern selected
- Status of the test
- Interval selected
- Time remaining on the BER test
- Total bit errors
- Total bits received

BERT is data intrusive. Regular data cannot flow on a line while the test is in progress. The line is put in an alarm state when BERT is in progress and restored to a normal state after BERT has been terminated.

## Configuring BERT on T3/E3 and T1/E1 Controllers

This task explains how to enable a bit error rate test (BERT) pattern on a T3/E3 or T1/E1 line or an individual channel group.

You must have configured a clear channel T3/E3 controller, or a channelized T3-to-T1/E1 controller.

**Restrictions**

Before configuring BERT on the 1-Port Channelized OC-48/STM-16 SPA, consider the following restrictions:

Only two simultaneous BERT tests are possible per STS-12 stream.

These test patterns are supported:

2^15-1 (O.151)

2^20-1 (O.151) - QRSS

2^23-1 (O.151)

Fixed Patterns (all 0s, all 1s etc.)

Single bit error injection

Data inversion

Before configuring BERT on the 4-Port Channelized T3/DS0 SPA, consider the following restrictions:

A maximum of 12 BERT sessions is supported.

6 simultaneous BERT sessions among the first three physical ports and 6 simultaneous BERT sessions on the fourth port are supported.

Only one BERT session per T1 is supported.

These test patterns are supported on the 4-Port Channelized T3/DS0 SPA:

2^11-1—T1/E1/DS0 only

2^15-1 (O.151)

2^20-1 (O.153)—T3 only

2^20-1 (QRSS)

2^23-1 (O.151)

Alternating 0s/1s

Fixed Patterns (all 0s, all 1s etc.)

1 in 8 DS1 insertion—T1/E1/DS0 only

3 in 24 DS1 insertion—T1/E1/DS0 only

These test patterns are supported on the 8-Port Channelized T1/E1 SPA for T1/E1/DS0:

2^11-1

2^15-1 (O.153)

2^20-1 (QRSS)

2^23-1 (O.151)

Alternating 0s/1s

Fixed Patterns (all 0s, all 1s etc.)

For other cards, valid patterns for all controllers and channel groups include: 0s, 1s, 2^15, 2^20, 2^20-QRSS, 2^23, and alt-0-1.

Additional valid patterns for T1 and E1 controllers include: 1in8, 3in24, 55Daly, and 55Octet. Additional valid patterns for channel groups include: 2^11, 2^9, ds0-1, ds0-2, ds0-3, and ds0-4.

### Before you begin

You must have configured a clear channel T3/E3 controller, or a channelized T3-to-T1/E1 controller.

## SUMMARY STEPS

1. **configure**
2. **controller [t3 | e3** `| t1 | e1]` *interface-path-id*
3. **bert pattern** *pattern*
4. **bert interval** *time*
5. **bert error** [*number*]
6. **end** or **commit**
7. **exit**
8. **exit**

9. **bert [t3 | e3** | t1 | e1] *interface-path-id* [**channel-group** *channel-group-number]* [**error**] **start**
10. **bert [t3 | e3** | t1 | e1] *interface-path-id* [**channel-group** *channel-group-number]* **stop**
11. **show controllers** [**t3 | e3** `| t1 | e1]` *interface-path-id*

## DETAILED STEPS

| | Command or Action | Purpose |
|---|---|---|
| **Step 1** | **configure**<br>**Example:**<br>`RP/0/RSP0/CPU0:router# configure` | Enters global configuration mode. |
| **Step 2** | **controller [t3 \| e3** `\| t1 \| e1]` *interface-path-id*<br>**Example:**<br>`RP/0/RSP0/CPU0:router(config)# controller t3 0/1/0/0` | Specifies the controller name and instance in the notation *rack/slot/module/port*, and enters T3, E3, T1, or E1 controller configuration mode. |
| **Step 3** | **bert pattern** *pattern*<br>**Example:**<br>`RP/0/RSP0/CPU0:router(config-t3)# bert pattern 2^15` | Enables a specific bit error rate test (BERT) pattern on a controller.<br>**Note** You must use the **bert** command in EXEC mode to start the BER test. |
| **Step 4** | **bert interval** *time*<br>**Example:**<br>`RP/0/RSP0/CPU0:router(config-t3)# bert pattern 2^15` | (Optional) Specifies the duration of a bit error rate test (BERT) pattern on a T3/E3 or T1/E1 line. The interval can be a value from 1 to 14400. |
| **Step 5** | **bert error** [*number*]<br>**Example:**<br>`RP/0/RSP0/CPU0:router(config-t3)# bert error 10` | Specifies the number of BERT errors to introduce into the bit stream. Range is from 1 to 255. |
| **Step 6** | **end** or **commit**<br>**Example:**<br>`RP/0/RSP0/CPU0:router(config-t3)# end`<br>or<br>`RP/0/RSP0/CPU0:router(config-t3)# commit` | Saves configuration changes.<br>• When you issue the **end** command, the system prompts you to commit changes:<br>`Uncommitted changes found, commit them before exiting(yes/no/cancel)? [cancel]:`<br>- Entering **yes** saves configuration changes to the running configuration file, exits the configuration session, and returns the router to EXEC mode.<br>- Entering **no** exits the configuration session and returns the router to EXEC mode without committing the configuration changes. |

| | Command or Action | Purpose |
|---|---|---|
| | | - Entering **cancel** leaves the router in the current configuration session without exiting or committing the configuration changes.<br>• Use the **commit** command to save the configuration changes to the running configuration file and remain within the configuration session. |
| **Step 7** | **exit**<br>**Example:**<br>`RP/0/RSP0/CPU0:router(config-t3)# exit` | Exits T3/E3 or T1/E1 controller configuration mode. |
| **Step 8** | **exit**<br>**Example:**<br>`RP/0/RSP0/CPU0:router(config)# exit` | Exits global configuration mode. |
| **Step 9** | **bert [t3 \| e3** \| t1 \| e1] *interface-path-id* [**channel-group** *channel-group-number]* [**error**] **start**<br>**Example:**<br>`RP/0/RSP0/CPU0:router# bert t3 0/3/0/0 start`<br>`RP/0/RSP0/CPU0:router# bert t3 0/3/0/0 error` | Starts the configured BERT test on the specified T3/E3 or T1/E1 controller.<br>**Note** • You can include the optional **error** keyword to inject errors into the running BERT stream. |
| **Step 10** | **bert [t3 \| e3** \| t1 \| e1] *interface-path-id* [**channel-group** *channel-group-number]* **stop**<br>**Example:**<br>`RP/0/RSP0/CPU0:router# bert t3 0/3/0/0 stop` | Stops the configured BERT test on the specified T3/E3 or T1/E1 controller. |
| **Step 11** | **show controllers** [**t3 \| e3** `\| t1 \| e1]` *interface-path-id*<br>**Example:**<br>`RP/0/RSP0/CPU0:router# show controllers t3 0/3/0/0` | Displays the results of the configured BERT.<br>Configure the serial interfaces that are associate with the controllers you tested, as described in the Configuring Serial Interfaces on the Cisco ASR 9000 Series Router module. |

### What to do next

Configure the serial interfaces that are associate with the controllers you tested, as described in the *Configuring Serial Interfaces on the Cisco ASR 9000 Series Router* module.

## Configuring BERT on a DS0 Channel Group

This task explains how to enable a bit error rate test (BERT) pattern on an individual DS0 channel group.

### Before you begin

You must have configured a clear channel T1/E1 controller, or a channelized T3-to-T1/E1 controller.

## SUMMARY STEPS

1. **configure**
2. **controller {t1 | e1}** *interface-path-id*
3. **channel-group** *channel-group-number*
4. **bert pattern** *pattern*
5. **bert interval** *time*
6. **end** or **commit**
7. **exit**
8. **exit**
9. **exit**
10. **bert [t1 | e1]** *interface-path-id* [**channel-group** *channel-group-number]* **[error] start**
11. **bert [t1 | e1]** *interface-path-id* **[channel-group** *channel-group-number]* **stop**
12. **show controllers [t1 | e1]** *interface-path-id*

## DETAILED STEPS

| | Command or Action | Purpose |
|---|---|---|
| **Step 1** | **configure**<br>**Example:**<br>`RP/0/RSP0/CPU0:router# configure` | Enters global configuration mode. |
| **Step 2** | **controller {t1 \| e1}** *interface-path-id*<br>**Example:**<br>`RP/0/RSP0/CPU0:router(config)# controller t3 0/1/0/0` | Specifies the controller name and instance in the notation *rack/slot/module/port*, and enters T1 or E1 controller configuration mode. |
| **Step 3** | **channel-group** *channel-group-number*<br>**Example:**<br>`RP/0/RSP0/CPU0:router(config-t1)# channel-group 1`<br>`RP/0/RSP0/CPU0:router(config-t1-channel_group)#` | Enters channel group configuration mode for a specific channel group. Replace *channel-group-number* with the number that identifies the channel group on which you want to configure a BERT. |
| **Step 4** | **bert pattern** *pattern*<br>**Example:**<br>`RP/0/RSP0/CPU0:router(config-t1-channel_group)# bert pattern 2^15` | Enables a specific bit error rate test (BERT) pattern on a T1 line. Valid patterns for all controllers and channel groups include: **0s**, **1s**, **2^15**, **2^20**, **2^20-QRSS**, **2^23**, and **alt-0-1**. Additional valid patterns for T1 and E1 controllers include: **1in8**, **3in24**, **55Daly**, and **55Octet**. Additional valid patterns for channel groups include: **2^11**, **2^9**, **ds0-1**, **ds0-2**, **ds0-3**, and **ds0-4.**<br>**Note** • You must use the **bert** command in EXEC mode to start the BER test. |

| | Command or Action | Purpose |
|---|---|---|
| **Step 5** | **bert interval** *time*<br>**Example:**<br>`RP/0/RSP0/CPU0:router(config-t1-channel_group)# bert interval 5` | (Optional) Specifies the duration, in minutes, of a bit error rate test (BERT) pattern on a T1/E1 line. The interval can be a value from 1 to 14400. |
| **Step 6** | **end** or **commit**<br>**Example:**<br>`RP/0/RSP0/CPU0:router(config-t1-channel_group)# end`<br>or<br>`RP/0/RSP0/CPU0:router(config-t1-channel_group)# commit` | Saves configuration changes.<br>• When you issue the **end** command, the system prompts you to commit changes:<br>`Uncommitted changes found, commit them before exiting(yes/no/cancel)? [cancel]:`<br>- Entering **yes** saves configuration changes to the running configuration file, exits the configuration session, and returns the router to EXEC mode.<br>- Entering **no** exits the configuration session and returns the router to EXEC mode without committing the configuration changes.<br>- Entering **cancel** leaves the router in the current configuration session without exiting or committing the configuration changes.<br>• Use the **commit** command to save the configuration changes to the running configuration file and remain within the configuration session. |
| **Step 7** | **exit**<br>**Example:**<br>`RP/0/RSP0/CPU0:router(config-t1-channel_group)# exit` | Exits channel group configuration mode. |
| **Step 8** | **exit**<br>**Example:**<br>`RP/0/RSP0/CPU0:router(config-t1)# exit` | Exits T1 or E1 configuration mode. |
| **Step 9** | **exit**<br>**Example:**<br>`RP/0/RSP0/CPU0:router(config)# exit` | Exits global configuration mode. |
| **Step 10** | **bert [t1 \| e1]** *interface-path-id* [**channel-group** *channel-group-number]* **[error] start**<br>**Example:** | Starts the configured BERT test on the specified channel group. |

| | Command or Action | Purpose |
|---|---|---|
| | `RP/0/RSP0/CPU0:router# bert t1 0/3/0/0/0 start`<br>`RP/0/RSP0/CPU0:router# bert t1 0/3/0/0/0 error` | **Note** • You can include the optional **error** keyword to inject errors into the running BERT stream. |
| **Step 11** | **bert [t1 \| e1]** *interface-path-id* **[channel-group** *channel-group-number]* **stop**<br>**Example:**<br>`RP/0/RSP0/CPU0:router# bert t1 0/3/0/0/0 stop` | Stops the configured BERT test on the specified channel group. |
| **Step 12** | **show controllers [t1 \| e1]** *interface-path-id*<br>**Example:**<br>`RP/0/RSP0/CPU0:router# show controllers t3 0/3/0/0` | Displays the results of the configured BERT. |

### What to do next

Configure the serial interfaces that are associate with the controllers you tested, as described in the *Configuring Serial Interfaces on the Cisco ASR 9000 Series Router* module later in this document.

# Configuring Link Noise Monitoring on a T1 or E1 Channel

This section describes how to configure Link Noise Monitoring (LNM) on a T1 or E1 channel on the Cisco ASR 9000 Series Router.

### Before you begin

Before you configure LNM on the Cisco ASR 9000 Series Router, be sure that these requirements are met:

- A 2-Port Channelized OC-12c/DS0 SPA is installed.
- The 2-Port Channelized OC-12/DS0 SPA is configured as a channelized T3 controller running in T1 or E1 mode, as described in the Configuring a Channelized T3 Controller.
- The T1 or E1 controller is configured as a single channel supporting the full 24 or 31 DS0 time slots, as described in the Configuring a T1 Controller or Configuring an E1 Controller. LNM is not supported on a fractional T1 or E1 link.

### Restrictions

Before you configure LNM on the Cisco ASR 9000 Series Router, consider these restrictions:

- The **lnm major-warning** and **lnm remove** commands are mutually exclusive. You can only configure one of these LNM functions on a controller.
- The **lnm minor-warning** command can be configured with the **lnm major-warning** or **lnm remove** commands on a controller.
- When the **lnm remove** command is configured, links in an MLPPP bundle are removed only up to the threshold set by the **ppp multilink minimum-active links** command.

## SUMMARY STEPS

1. **configure**
2. **controller** {**t1** | **e1**} *interface-path-id*
3. **lnm** {**major-warning** | **remove**}[**clear** | **set**][**line-code-violation** *lcv-value* [**path-code-violation** *pcv-value*]][**duration** *seconds*]
4. **lnm minor-warning** [**clear** | **set**][**line-code-violation** *lcv-value* [**path-code-violation** *pcv-value*]][**duration** *seconds*]
5. **lnm syslog**
6. **end** or **commit**

## DETAILED STEPS

| | Command or Action | Purpose |
|---|---|---|
| **Step 1** | **configure**<br>**Example:**<br>`RP/0/RSP0/CPU0:router# configure` | Enters global configuration mode. |
| **Step 2** | **controller** {**t1** \| **e1**} *interface-path-id*<br>**Example:**<br>`RP/0/RSP0/CPU0:router(config)# controller t1 0/1/1/0/1/1` | Enters T1 or E1 configuration mode. |
| **Step 3** | **lnm** {**major-warning** \| **remove**}[**clear** \| **set**][**line-code-violation** *lcv-value* [**path-code-violation** *pcv-value*]][**duration** *seconds*]<br>**Example:**<br>`RP/0/RSP0/CPU0:router(config-t1)# lnm major-warning` | (Optional) Enables link noise monitoring and specifies thresholds for noise errors on T1/E1 links that are used to signal major warning events or link removal and recovery from those events.<br>The default values for both set and clear thresholds are:<br>• For T1 links—**line-code-violation** is 1544, **path-code-violation** is 320, and **duration** is 10.<br>• For E1 links—**line-code-violation** is 2048, **path-code-violation** is 831, and **duration** is 10. |
| **Step 4** | **lnm minor-warning** [**clear** \| **set**][**line-code-violation** *lcv-value* [**path-code-violation** *pcv-value*]][**duration** *seconds*]<br>**Example:**<br>`RP/0/RSP0/CPU0:router(config-t1)# lnm minor-warning` | (Optional) Enables link noise monitoring and specifies thresholds for noise errors on T1/E1 links that are used to signal minor warning events and recovery from those events.<br>The default values for both set and clear thresholds are:<br>• For T1 links—**line-code-violation** is 154, **path-code-violation** is 145, and **duration** is 10.<br>• For E1 links—**line-code-violation** is 205, **path-code-violation** is 205, and **duration** is 10. |
| **Step 5** | **lnm syslog**<br>**Example:** | (Optional) Enables logging of link noise monitoring major and minor events and alarms. |

| | Command or Action | Purpose |
|---|---|---|
| | `RP/0/RSP0/CPU0:router(config-t1)# lnm syslog` | **Note** You must use this command for LNM messages to appear in both the system log and in the log events buffer. |
| **Step 6** | **end** or **commit**<br>**Example:**<br>`RP/0/RSP0/CPU0:router(config-sonet)# end`<br>or<br>`RP/0/RSP0/CPU0:router(config-sonet)# commit` | Saves configuration changes.<br>• When you issue the **end** command, the system prompts you to commit changes:<br>`Uncommitted changes found, commit them before exiting(yes/no/cancel)? [cancel]:`<br>- Entering **yes** saves configuration changes to the running configuration file, exits the configuration session, and returns the router to EXEC mode.<br>- Entering **no** exits the configuration session and returns the router to EXEC mode without committing the configuration changes.<br>- Entering **cancel** leaves the router in the current configuration session without exiting or committing the configuration changes.<br>• Use the **commit** command to save the configuration changes to the running configuration file and remain within the configuration session. |

## Verifying Link Noise Monitoring Configuration and Status

To verify LNM configuration and state information, as well as statistics and events, use the **show controllers lnm** command as shown in the following example:

**Note** When the **lnm remove** command is configured, the word “Remove” appears in the show controllers output headers and events in place of “major-warning” and “Major-Warn.”

```
RP/0/RSP0/CPU0:Router# show controllers t1 0/1/1/0/1/1 lnm all
Thu May 13 10:28:26.474 PDT

Controller T1 0/1/1/0/1/1

Syslog   Monitoring type  State     Thresholds (lcv/pcv/duration)
-------------------------------------------------------------------
enabled   minor-warning   stable    Set(  15/  15/   4) Clear(  15/  15/   4)
          major-warning   stable    Set( 154/ 145/   4) Clear( 154/ 145/   4)

  Monitoring type            Minor-Warn      Major-Warn
  ---------------            ------------    ------------
  Create                     1               1
  Update                     0               0
  Delete                     0               0
```

```
  Clear                     0               0
  Noise Crossed             1               1
  Noise Cleared             1               1

Last Five Events
-------------------------------------------------------------------
MINWARNCROSS: Noise crossed minor-warn threshold at Thu May 13 09:54:10 2010
MAJWARNCROSS: Noise crossed major-warn threshold at Thu May 13 09:54:11 2010
MAJWARNCLEAR: Noise cleared major-warn threshold at Thu May 13 10:27:25 2010
MINWARNCLEAR: Noise cleared minor-warn threshold at Thu May 13 10:28:14 2010
```

## Clearing Link Noise Monitoring States and Statistics

You can use the **clear controller lnm** command to reset LNM states or clear statistics and reset them to zero.

There should not normally be any need to clear the LNM controller states. The **state** option resets the LNM configuration which causes an update of the current LNM states in the system. Therefore, under normal conditions, if the controller is in alarm state, the reset should continue to report the alarm state; alternatively, if the controller is clear of any alarms, the reset will show the stable state. The use of the **clear controller lnm state** command does not actually clear any alarms, but causes a refresh of their values in the system. Therefore, this command can be used if the reported controller state should happen to be out of synchronization with the actual controller state.

To reset LNM states, use the **clear controller lnm** command as shown in the following example:

```
RP/0/RSP0/CPU0:Router# clear controller t1 0/1/0/0/1/1 lnm state
```

To clear LNM statistics and reset counters to zero, use the **clear controller lnm** command as shown in the following example:

```
RP/0/RSP0/CPU0:Router# clear controller t1 0/1/0/0/1/1 lnm statistics

RP/0/RSP0/CPU0:Router# show controller T1 0/1/0/1/1/1 lnm statistics
Thu May 13 11:26:20.991 PDT

Controller T1 0/1/0/1/1/1

  Monitoring type           Minor-Warn      Major-Warn
  ---------------           ------------    ------------
  Create                    0               0
  Update                    0               0
  Delete                    0               0
  Clear                     0               0
  Noise Crossed             0               0
  Noise Cleared             0               0
```

# Configuration Examples

This section contains the following examples:

## Configuring a Clear Channel T3 Controller: Example

The following example shows configuration for a clear channel T3 controller:

```
RP/0/RSP0/CPU0:router# configure
```

```
RP/0/RSP0/CPU0:router(config)#controller T3 0/3/2/0
RP/0/RSP0/CPU0:router(config-t3)#clock source internal
RP/0/RSP0/CPU0:router(config-t3)#mode serial
RP/0/RSP0/CPU0:router(config-t3)#cablelength 4
RP/0/RSP0/CPU0:router(config-t3)#framing c-bit
RP/0/RSP0/CPU0:router(config-t3)#commit
```

# Configuring a T3 Controller with Channelized T1 Controllers: Example

The following example shows how to configure a T3 controller that has been channelized 28 T1 controllers:

```
RP/0/RSP0/CPU0:router# configure
RP/0/RSP0/CPU0:router(config)# controller T3 0/3/0/0
RP/0/RSP0/CPU0:router(config-t3)# mode t1
RP/0/RSP0/CPU0:router(config-t3)# framing m23
RP/0/RSP0/CPU0:router(config-t3)# cablelength 11
RP/0/RSP0/CPU0:router(config-t3)# clock source line
RP/0/RSP0/CPU0:router(config-t3)#commit
RP/0/RSP0/CPU0:router(config-t3)#exit
RP/0/RSP0/CPU0:router(config)# exit
RP/0/RSP0/CPU0:router# show controllers T1 ?

  0/3/0/0/0   T1 Interface Instance
  0/3/0/0/1   T1 Interface Instance
  0/3/0/0/10  T1 Interface Instance
  0/3/0/0/11  T1 Interface Instance
  0/3/0/0/12  T1 Interface Instance
  0/3/0/0/13  T1 Interface Instance
  0/3/0/0/14  T1 Interface Instance
  0/3/0/0/15  T1 Interface Instance
  0/3/0/0/16  T1 Interface Instance
  0/3/0/0/17  T1 Interface Instance
  0/3/0/0/18  T1 Interface Instance
  0/3/0/0/19  T1 Interface Instance
  0/3/0/0/2   T1 Interface Instance
  0/3/0/0/20  T1 Interface Instance
  0/3/0/0/21  T1 Interface Instance
  0/3/0/0/22  T1 Interface Instance
  0/3/0/0/23  T1 Interface Instance
  0/3/0/0/24  T1 Interface Instance
  0/3/0/0/25  T1 Interface Instance
  0/3/0/0/26  T1 Interface Instance
  0/3/0/0/27  T1 Interface Instance
  0/3/0/0/3   T1 Interface Instance
  0/3/0/0/4   T1 Interface Instance
  0/3/0/0/5   T1 Interface Instance
 --More--
!
RP/0/RSP0/CPU0:router#
RP/0/RSP0/CPU0:router(config)#configure
RP/0/RSP0/CPU0:router(config)# controller t1 0/3/0/0/0
RP/0/RSP0/CPU0:router(config-t1)# channel-group 0
RP/0/RSP0/CPU0:router(config-t1-channel_group)# timeslots 1-24
RP/0/RSP0/CPU0:router(config-t1-channel_group)# exit
RP/0/RSP0/CPU0:router(config-t1)# exit
RP/0/RSP0/CPU0:router(config)# controller t1 0/3/0/0/1
RP/0/RSP0/CPU0:router(config-t1)# channel-group 0
RP/0/RSP0/CPU0:router(config-t1-channel_group)# timeslots 1-24
RP/0/RSP0/CPU0:router(config-t1-channel_group)# exit
RP/0/RSP0/CPU0:router(config-t1)# exit
RP/0/RSP0/CPU0:router(config)# controller t1 0/3/0/0/2
```

```
RP/0/RSP0/CPU0:router(config-t1)# channel-group 0
RP/0/RSP0/CPU0:router(config-t1-channel_group)# timeslots 1-12
RP/0/RSP0/CPU0:router(config-t1-channel_group)# exit
RP/0/RSP0/CPU0:router(config-t1)# channel-group 1
RP/0/RSP0/CPU0:router(config-t1-channel_group)# timeslots 13-24
RP/0/RSP0/CPU0:router(config-t1-channel_group)# exit
RP/0/RSP0/CPU0:router(config-t1)# exit
RP/0/RSP0/CPU0:router(config)# controller t1 0/3/0/0/3
RP/0/RSP0/CPU0:router(config-t1)# channel-group 0
RP/0/RSP0/CPU0:router(config-t1-channel_group)# timeslots 1-6
RP/0/RSP0/CPU0:router(config-t1-channel_group)# exit
RP/0/RSP0/CPU0:router(config-t1)# channel-group 1
RP/0/RSP0/CPU0:router(config-t1-channel_group)# timeslots 7-12
RP/0/RSP0/CPU0:router(config-t1-channel_group)# exit
RP/0/RSP0/CPU0:router(config-t1)# channel-group 2
RP/0/RSP0/CPU0:router(config-t1-channel_group)# timeslots 13-18
RP/0/RSP0/CPU0:router(config-t1-channel_group)# exit
RP/0/RSP0/CPU0:router(config-t1)# channel-group 3
RP/0/RSP0/CPU0:router(config-t1-channel_group)# timeslots 19-24
RP/0/RSP0/CPU0:router(config-t1-channel_group)# exit
RP/0/RSP0/CPU0:router(config-t1-channel_group)#commit
```

# Configuring BERT on a T3 Controller: Example

The following example shows how to configure a BERT on a T3 controller, and then display the results of the BERT:

```
RP/0/RSP0/CPU0:router# config
RP/0/RSP0/CPU0:router(config)# controller t3 0/3/0/1
RP/0/RSP0/CPU0:router(config-t3)# bert pattern 0s

Run bert from exec mode for the bert config to take effect

RP/0/RSP0/CPU0:router(config-t3)#exit
RP/0/RSP0/CPU0:router(config)# exit

Uncommitted changes found, commit them before exiting(yes/no/cancel)? [cancel]
RP/0/RSP0/CPU0:router# bert t3 0/3/0/1 start


RP/0/RSP0/CPU0:router# bert t3 0/3/0/1 stop


RP/0/RSP0/CPU0:router# show controllers t3 0/3/0/1

  T30/3/0/1 is up
  No alarms detected.
  MDL transmission is disabled
    EIC: , LIC: , FIC: , UNIT:
     Path FI:
     Idle Signal PORT_NO:
     Test Signal GEN_NO:
  FEAC code received: No code is being received
  Framing is C-BIT Parity, Line Code is B3ZS, Clock Source is Internal
  Data in current interval (108 seconds elapsed):
     0 Line Code Violations, 0 P-bit Coding Violation
     0 C-bit Coding Violation, 0 P-bit Err Secs
     0 P-bit Severely Err Secs, 0 Severely Err Framing Secs
     0 Unavailable Secs, 0 Line Errored Secs
     0 C-bit Errored Secs, 0 C-bit Severely Errored Secs
  Data in Interval 1:
```

```
    0 Line Code Violations, 0 P-bit Coding Violation
    0 C-bit Coding Violation, 0 P-bit Err Secs
    0 P-bit Severely Err Secs, 0 Severely Err Framing Secs
    0 Unavailable Secs, 0 Line Errored Secs
    0 C-bit Errored Secs, 0 C-bit Severely Errored Secs
  Data in Interval 2:
    0 Line Code Violations, 0 P-bit Coding Violation
    0 C-bit Coding Violation, 0 P-bit Err Secs
    0 P-bit Severely Err Secs, 0 Severely Err Framing Secs
    0 Unavailable Secs, 0 Line Errored Secs
    0 C-bit Errored Secs, 0 C-bit Severely Errored Secs
  Data in Interval 3:
    0 Line Code Violations, 0 P-bit Coding Violation
    0 C-bit Coding Violation, 0 P-bit Err Secs
    0 P-bit Severely Err Secs, 0 Severely Err Framing Secs
    0 Unavailable Secs, 0 Line Errored Secs
    0 C-bit Errored Secs, 0 C-bit Severely Errored Secs
```

# Configuring Link Noise Monitoring on a T1 Controller: Examples

The following example shows how to configure a channelized T3 controller for T1 configuration mode using the full 24 DS0 timeslots as a single channel before configuring LNM on the link. In this example, the values shown are actually the system defaults for the set thresholds:

```
RP/0/RSP0/CPU0:router# configure
RP/0/RSP0/CPU0:router(config)# controller T3 0/1/1/0/1
RP/0/RSP0/CPU0:router(config-t3)# mode t1
RP/0/RSP0/CPU0:router(config-t3)# framing m23
RP/0/RSP0/CPU0:router(config-t3)# cablelength 11
RP/0/RSP0/CPU0:router(config-t3)# clock source line
RP/0/RSP0/CPU0:router(config-t3)#commit
RP/0/RSP0/CPU0:router(config-t3)#exit
RP/0/RSP0/CPU0:router(config)# controller t1 0/1/1/0/1/1
RP/0/RSP0/CPU0:router(config-t1)# channel-group 0
RP/0/RSP0/CPU0:router(config-t1-channel_group)# timeslots 1-24
RP/0/RSP0/CPU0:router(config-t1-channel_group)# exit
RP/0/RSP0/CPU0:router(config-t1)# lnm syslog
RP/0/RSP0/CPU0:router(config-t1)# lnm major-warning set line-code-violation 1544
path-code-violation 320 duration 10
RP/0/RSP0/CPU0:router(config-t1)# lnm minor-warning set line-code-violation 154
path-code-violation 145 duration 10
```

The following example shows how to configure a channelized T3 controller for T1 configuration mode using the full 24 DS0 timeslots as a single channel before configuring LNM on the link. In this example, the values shown are actually the system defaults for the set thresholds, and LNM is configured to signal the Noise Attribute to PPP for MLPPP link removal when those thresholds are crossed:

```
RP/0/RSP0/CPU0:router# configure
RP/0/RSP0/CPU0:router(config)# controller T3 0/1/1/0/1
RP/0/RSP0/CPU0:router(config-t3)# mode t1
RP/0/RSP0/CPU0:router(config-t3)# framing m23
RP/0/RSP0/CPU0:router(config-t3)# cablelength 11
RP/0/RSP0/CPU0:router(config-t3)# clock source line
RP/0/RSP0/CPU0:router(config-t3)#commit
RP/0/RSP0/CPU0:router(config-t3)#exit
RP/0/RSP0/CPU0:router(config)# controller t1 0/1/1/0/1/1
RP/0/RSP0/CPU0:router(config-t1)# channel-group 0
RP/0/RSP0/CPU0:router(config-t1-channel_group)# timeslots 1-24
RP/0/RSP0/CPU0:router(config-t1-channel_group)# exit
```

```
RP/0/RSP0/CPU0:router(config-t1)# lnm syslog
RP/0/RSP0/CPU0:router(config-t1)# lnm remove set line-code-violation 1544 path-code-violation
 320 duration 10
RP/0/RSP0/CPU0:router(config-t1)# lnm minor-warning set line-code-violation 154
path-code-violation 145 duration 10
```

# QoS on T3 Channels: Example

QoS on the T3 channels is supported for both PPP and HDLC encapsulation. The following example shows a typical QoS configuration for T3 interfaces:

```
class-map VOIP
match dscp EF
end-class-map
class-map OAM
match dscp AF43
end-class-map
!
Policy-map T3-no-priority
class OAM
bandwidth percent 30
!
class class-default
!
end-policy-map
!
Policy-map T3-priority
class VOIP
priority level 1
     police rate percent 60
!
class OAM
bandwidth percent 30
!
class class-default
!
end-policy-map
```

CHAPTER 15

# Configuring Dense Wavelength Division Multiplexing Controllers

This module describes the configuration of dense wavelength division multiplexing (DWDM) controllers.

DWDM is an optical technology that is used to increase bandwidth over existing fiber-optic backbones. DWDM can be configured on supported 10-Gigabit Ethernet (GE) line cards. After you configure the DWDM controller, you can configure an associated 10-Gigabit Ethernet interface.

### Feature History for Configuring DWDM Controller Interfaces

| Release | Modification |
|---|---|
| Release 3.9.0 | This feature was introduced on the Cisco ASR 9000 Series Router on the following cards:<br>• Cisco 8-Port 10 Gigabit Ethernet Line Card (A9K-8T-L and -E)<br>• Cisco 2-port 10 Gigabit Ethernet + 20-port Gigabit Ethernet Combination Line Card (A9K-2T20GE-L) |
| Release 3.9.1 | Support for the following cards was added:<br>• Cisco 8-Port 10 Gigabit Ethernet Line Card (A9K-8T-B)<br>• Cisco 2-port 10 Gigabit Ethernet + 20-port Gigabit Ethernet Combination Line Card (A9K-2T20GE-B and -E) |
| Release 4.0.0 | Support for IPoDWDM Proactive Protection was added on these cards:<br>• Cisco 8-Port 10 Gigabit Ethernet Line Card (A9K-8T-L, -B, and -E)<br>• Cisco 2-port 10 Gigabit Ethernet + 20-port Gigabit Ethernet Combination Line Card (A9K-2T20GE-L, -B, and -E) |

| | |
|---|---|
| Release 4.2.1 | Support for IPoDWDM Proactive Protection was added on these Module Port Adaptors:<br>• A9K-MPA-4x10GE<br>• A9K-MPA-2X10GE |
| Release 4.2.3 | Support for IPoDWDM Proactive Protection was added on these Module Port Adaptors:<br>• A9K-MPA-2X40GE<br>• A9K-MPA-1X40GE |

• Configuring Dense Wavelength Division Multiplexing Controllers, on page 540
• Prerequisites for Configuring DWDM Controller Interfaces, on page 541
• Information About the DWDM Controllers, on page 541
• CFP2 DCO Optics Version Compatibility, on page 542
• Information about IPoDWDM, on page 543
• How to Configure DWDM Controllers, on page 544
• How to Perform Performance Monitoring on DWDM Controllers, on page 550
• Configuring IPoDWDM, on page 554
• Configuration Examples, on page 559

# Configuring Dense Wavelength Division Multiplexing Controllers

This module describes the configuration of dense wavelength division multiplexing (DWDM) controllers.

DWDM is an optical technology that is used to increase bandwidth over existing fiber-optic backbones. DWDM can be configured on supported 10-Gigabit Ethernet (GE) line cards. After you configure the DWDM controller, you can configure an associated 10-Gigabit Ethernet interface.

### Feature History for Configuring DWDM Controller Interfaces

| Release | Modification |
|---|---|
| Release 3.9.0 | This feature was introduced on the Cisco ASR 9000 Series Router on the following cards:<br>• Cisco 8-Port 10 Gigabit Ethernet Line Card (A9K-8T-L and -E)<br>• Cisco 2-port 10 Gigabit Ethernet + 20-port Gigabit Ethernet Combination Line Card (A9K-2T20GE-L) |

| | |
|---|---|
| Release 3.9.1 | Support for the following cards was added:<br>• Cisco 8-Port 10 Gigabit Ethernet Line Card (A9K-8T-B)<br>• Cisco 2-port 10 Gigabit Ethernet + 20-port Gigabit Ethernet Combination Line Card (A9K-2T20GE-B and -E) |
| Release 4.0.0 | Support for IPoDWDM Proactive Protection was added on these cards:<br>• Cisco 8-Port 10 Gigabit Ethernet Line Card (A9K-8T-L, -B, and -E)<br>• Cisco 2-port 10 Gigabit Ethernet + 20-port Gigabit Ethernet Combination Line Card (A9K-2T20GE-L, -B, and -E) |
| Release 4.2.1 | Support for IPoDWDM Proactive Protection was added on these Module Port Adaptors:<br>• A9K-MPA-4x10GE<br>• A9K-MPA-2X10GE |
| Release 4.2.3 | Support for IPoDWDM Proactive Protection was added on these Module Port Adaptors:<br>• A9K-MPA-2X40GE<br>• A9K-MPA-1X40GE |

# Prerequisites for Configuring DWDM Controller Interfaces

You must be in a user group associated with a task group that includes the proper task IDs. The command reference guides include the task IDs required for each command. If you suspect user group assignment is preventing you from using a command, contact your AAA administrator for assistance.

Before configuring a DWDM controller, be sure that you have installed one of these cards that support DWDM:

- Cisco 8-Port 10 Gigabit Ethernet Line Card
- Cisco 2-port 10 Gigabit Ethernet + 20-port Gigabit Ethernet Combination Line Card

# Information About the DWDM Controllers

DWDM support in Cisco IOS XR software is based on the Optical Transport Network (OTN) protocol that is specified in ITU-T G.709. This standard combines the benefits of SONET/SDH technology with the multiwavelength networks of DWDM. It also provides for forward error correction (FEC) that can allow a reduction in network costs by reducing the number of regenerators used.

To enable multiservice transport, OTN uses the concept of a wrapped overhead (OH). To illustrate this structure:

- Optical channel payload unit (OPU) OH information is added to the information payload to form the OPU. The OPU OH includes information to support the adaptation of client signals.
- Optical channel data unit (ODU) OH is added to the OPU to create the ODU. The ODU OH includes information for maintenance and operational functions to support optical channels.
- Optical channel transport unit (OTU) OH together with the FEC is added to form the OTU. The OTU OH includes information for operational functions to support the transport by way of one or more optical channel connections.
- Optical channel (OCh) OH is added to form the OCh. The OCh provides the OTN management functionality and contains four subparts: the OPU, ODU, OTU, and frame alignment signal (FAS). See figure below.

***Figure 43: OTN Optical Channel Structure***

# CFP2 DCO Optics Version Compatibility

There are two hardware versions of the CFP2 DCO optics (A0 and B0). The following table shows hardware version compatibility.

You can identify the version using **show inventory** command and looking at the **version ID** (VID):

V01 = A0

V02 = B0

***Table 20: Hardware Version Compatibility***

| FEC Mode | CFP2 DCO Versions | Supported |
|---|---|---|
| 15sdfec | A0 -> A0 / B0 -> B0 | Yes |
| | A0 -> B0 / B0 -> A0 | Yes |
| 15sdfecde | A0 -> A0 / B0 -> B0 | Yes |
| | A0 -> B0 / B0 -> A0 | Yes |
| Staircase FEC | A0 -> A0 / B0 -> B0 | Yes |
| | A0 -> B0 / B0 -> A0 | No |
| | B0 -> A9K-400G-DWDM-TR | Yes |
| | A0 -> A9K-400G-DWDM-TR | No |

**Note**

- A9K-400G-DWDM-TR (2x100G (CFP2) + 20x10GE (SFP+) Combination IPoDWDM) supports 100G ACO optics (ONS-CFP2-WDM).
- A9K-MPA-2X100GE (2x100G CFP2) supports CFP2 DCO, but only at 100G.
- CFP2 DCO A0 version optics do not support 100G, 7% Staircase FEC mode as per the required standard and therefore is non-compatible with CFP2 DCO B0 version and A9K-400G-DWDM-TR (2x100G (CFP2) + 20x10GE (SFP+) Combination IPoDWDM) ACO Optics.

# Information about IPoDWDM

Cisco IOS XR software includes the IP over Dense Wavelength Division Multiplexing (IPoDWDM) feature.

IPoDWDM is supported on these hardware devices:

- Cisco 8-Port 10 Gigabit Ethernet Line Card
- Cisco 2-port 10 Gigabit Ethernet + 20-port Gigabit Ethernet Combination Line Card

**Note** The **ONS-C2-WDM-DE-1HL** Line Card supports only the OTN mode. To make **ONS-C2-WDM-DE-1HL** work in the OTN mode, use the following configuration:

```
Set port to OTN mode
(config)#controller dwdm 0/2/0/0
(config-dwdm)#g709 enable
(config-dwdm)#admin-state in-service
(config-dwdm)#commit
```

IPoDWDM currently provides these software features:

- Proactive Maintenance

### Proactive Maintenance

Proactive maintenance automatically triggers Forward Error Correction-Fast Re-Route (FEC-FRR). Proactive maintenance requires coordinated maintenance between Layer 0 (L0) and Layer 3 (L3). L0 is the DWDM optical layer. FEC-FRR is an L3 protection mechanism. FEC-FRR detects failures before they happen and corrects errors introduced during transmission or that are due to a degrading signal.

### Shared Risk Link Group (SRLG)

System administrators can configure the following IPoDWDM features:

- Optical Layer DWDM port, see Configuring the Optical Layer DWDM Ports.
- Administrative state of DWDM optical ports, see Configuring the Administrative State of DWDM Optical Ports.

- FEC-FRR trigger threshold, window size, revert threshold, and revert window size, see Configuring Proactive FE-FRR Triggering.

### FEC-FRR Triggering

FEC-FRR can be configure to be triggered by the following alarms:

- ais – Alarm Indication Signal (AIS)
- bdi – Backward Defect Indication (BDI)
- *bdiO – Backward Defect Indication - Overhead (BDI-O)
- *bdiP – Backward Defect Indication - Payload (BDI-P)
- *deg – Degraded (DEG)
- lck – Locked (LCK)
- lof – Loss of Frame (LOF)
- lom – Loss of Multi Frame
- los – Loss of Signal (LOS)
- *losO – Loss of Signal - Overhead (LOS-O)
- *losP – Loss of Signal - Payload (LOS-P)
- oci – Open Connection Indication (OCI)
- plm – Payload Mismatch (PLM)
- *ssf – Server Signal Failure (SSF)
- *ssfO – Server Signal Failure - Overhead (SSF-O)
- *ssfP – Server Signal Failure - Payload (SSF-P)
- tim – Trace Identifier Mismatch (TIM)

### Signal Logging

DWDM statistic data, such as EC, UC and alarms, are collected and stored in the log file on the DWDM line card.

# How to Configure DWDM Controllers

The DWDM controllers are configured in the physical layer control element of the Cisco IOS XR software configuration space. This configuration is done using the **controller dwdm** command, and is described in the following task:

**Note** All interface configuration tasks for Gigabit Ethernet interfaces still must be performed in interface configuration mode.

# Configuring the Optical Parameters

This task describes how to configure the receive power threshold and the wavelength parameters for the DWDM controller. You should verify that the optical parameters are configured correctly for your DWDM installation and if necessary, perform this task.

### Before you begin

The **rx-los-threshold**, **wavelength** and **transmit-power** commands can be used only when the controller is in the shutdown state. Use the **shutdown** command.

### Restrictions

The transmit power level and receive LOS threshold are configurable only on the Cisco Cisco 1-Port OC-768c/STM-256c DWDM PLIM.

## SUMMARY STEPS

1. **configure**
2. **controller dwdm** *interface-path-id*
3. **admin-state {maintenance | out-of-service}**
4. **commit**
5. **rx-los-threshold** *power-level*
6. **wavelength** *channel-number*
7. **transmit-power** *power-level*
8. **end** or **commit**
9. **admin-state in-service**
10. **show controllers dwdm** *interface-path-id* **[optics | wavelength-map]**

## DETAILED STEPS

| | Command or Action | Purpose |
|---|---|---|
| **Step 1** | **configure**<br>**Example:**<br>`RP/0/RP0/CPU0:Router# configure` | Enters global configuration mode. |
| **Step 2** | **controller dwdm** *interface-path-id*<br>**Example:**<br>`RP/0/RP0/CPU0:Router(config)# controller dwdm 0/1/0/0` | Specifies the DWDM controller name in the notation *rack/slot/module/port* and enters DWDM configuration mode. |
| **Step 3** | **admin-state {maintenance \| out-of-service}**<br>**Example:**<br>`RP/0/RP0/CPU0:Router(config-dwdm)# admin-state maintenance` | Specifies the DWDM interface administrative state. You must put the controller in **maintenance** or **out-of-service** state before you can use the DWDM configuration commands. |

| | Command or Action | Purpose |
|---|---|---|
| **Step 4** | **commit**<br>**Example:**<br>`RP/0/RP0/CPU0:Router(config-dwdm)# commit` | Saves configuration changes. This performs the shutdown from the previous step. When the controller has been shut down, you can proceed with the configuration. |
| **Step 5** | **rx-los-threshold** *power-level*<br>**Example:**<br>`RP/0/RP0/CPU0:Router(config-dwdm)# rx-los-threshold -10` | Configures the transponder receive power threshold. Values are in units of 0.1 dBm and can range from -350 to 50. This corresponds to a range of -35 dBm to 5 dBm. |
| **Step 6** | **wavelength** *channel-number*<br>**Example:**<br>`RP/0/RP0/CPU0:Router(config-dwdm)# wavelength  1` | Configures the channel number corresponding to the first wavelength. Values can range from 1 to 185, but not all channels are supported on all PLIMs. Use the **show controller dwdm** command with the **wavelength-map** keyword to determine which channels and wavelengths are supported on a specific controller.<br>**Note** • There is no cross-checking to determine if the chosen wavelength is being used on another port on the same PLIM or on another PLIM in the system. |
| **Step 7** | **transmit-power** *power-level*<br>**Example:**<br>`RP/0/RP0/CPU0:Router(config-dwdm)# transmit-power 10` | Configures the transponder transmit power. Values are in units of 0.1 dBm and can range from -190 to +10. This corresponds to a range of -19 dBm to +1 dBm. |
| **Step 8** | **end** or **commit**<br>**Example:**<br>`RP/0/RP0/CPU0:Router(config-dwdm)# end`<br>or<br>`RP/0/RP0/CPU0:Router(config-dwdm)# commit` | Saves configuration changes.<br>• When you issue the **end** command, the system prompts you to commit changes:<br>`Uncommitted changes found, commit them before exiting(yes/no/cancel)? [cancel]:`<br>• Entering **yes** saves configuration changes to the running configuration file, exits the configuration session, and returns the router to EXEC mode.<br>• Entering **no** exits the configuration session and returns the router to EXEC mode without committing the configuration changes.<br>• Entering **cancel** leaves the router in the current configuration session without exiting or committing the configuration changes. |

| | Command or Action | Purpose |
|---|---|---|
| | | • Use the **commit** command to save the configuration changes to the running configuration file and remain within the configuration session. |
| **Step 9** | **admin-state in-service**<br>**Example:**<br>`RP/0/RP0/CPU0:Router(config-dwdm)# admin-state in-service` | Places the DWDM port in In Service (IS) state, to support all normal operation. |
| **Step 10** | **show controllers dwdm** *interface-path-id* **[optics \| wavelength-map]**<br>**Example:**<br>`RP/0/RP0/CPU0:Router# show controller dwdm 0/1/0/0 optics` | Displays the output power level, input power level, wavelength, and laser bias current monitoring information. |

## Troubleshooting Tips

You will get an error message if you try to commit configuration changes to the controller when it is in the up state. You must use the **admin-states maintenance** or **admin-states out-of-service** command before you can use the DWDM configuration commands.

# Configuring G.709 Parameters

### Before you begin

The , and **g709 fec** commands can be used only when the controller is in the shutdown state. Use the **admin-state** command.

### SUMMARY STEPS

1. **configure**
2. **controller dwdm** *interface-path-id*
3. **admin-state maintenance** or **admin-state out-of-service**
4. **commit**
5. **g709 disable**
6. **loopback {internal | line}**
7. **g709 fec** {**disable** | **standard**}
8. **g709** {**odu** | **otu**} **report** *alarm* **disable**
9. **g709 otu overhead tti** {**expected** | **sent**} {**ascii** | **hex**} *tti-string*
10. **end** or **commit**
11. **admin-state in-service**
12. **show controllers dwdm** *interface-path-id* **g709**

## DETAILED STEPS

| | Command or Action | Purpose |
|---|---|---|
| **Step 1** | **configure**<br>**Example:**<br>`RP/0/RSP0/CPU0:Router# configure` | Enters global configuration mode. |
| **Step 2** | **controller dwdm** *interface-path-id*<br>**Example:**<br>`RP/0/RSP0/CPU0:Router(config)# controller dwdm 0/1/0/0` | Specifies the DWDM controller name in the notation *rack/slot/module/port* and enters DWDM configuration mode. |
| **Step 3** | **admin-state maintenance** or **admin-state out-of-service**<br>**Example:**<br>`RP/0/RSP0/CPU0:Router(config-dwdm)# admin-state out-of-service` | Disables the DWDM controller. You must disable the controller before you can use the DWDM configuration commands. |
| **Step 4** | **commit**<br>**Example:**<br>`RP/0/RSP0/CPU0:Router(config-dwdm)# commit` | Saves configuration changes. This performs the shutdown from the previous step. When the controller has been shut down, you can proceed with the configuration. |
| **Step 5** | **g709 disable**<br>**Example:**<br>`RP/0/RP0/CPU0:Router(config-dwdm)# g709 disable` | (Optional) Disables the G.709 wrapper. The wrapper is enabled by default.<br>**Note** • The **g709 disable** command is available on the Cisco 4-Port 10-Gigabit Ethernet DWDM PLIM only. |
| **Step 6** | **loopback {internal \| line}**<br>**Example:**<br>`RP/0/RSP0/CPU0:Router(config-dwdm)# loopback internal` | (Optional) Configures the DWDM controller for loopback mode. |
| **Step 7** | **g709 fec** {**disable** \| **standard**}<br>**Example:**<br>`RP/0/RSP0/CPU0:Router(config-dwdm)# g709 fec disable` | (Optional) Configures the forward error correction mode (FEC) for the DWDM controller. By default, enhanced FEC is enabled. |
| **Step 8** | **g709** {**odu** \| **otu**} **report** *alarm* **disable**<br>**Example:**<br>`RP/0/RSP0/CPU0:Router(config-dwdm)# g709 odu bdi disable` | (Optional) Disables the logging of selected optical channel data unit (ODU) alarms or optical channel transport unit (OTU) alarms to the console for a DWDM controller. By default, all alarms are logged to the console. |

| | Command or Action | Purpose |
|---|---|---|
| **Step 9** | **g709 otu overhead tti** {**expected** \| **sent**} {**ascii** \| **hex**} *tti-string*<br>**Example:**<br>`RP/0/RSP0/CPU0:Router(config-dwdm)# g709 otu overhead tti expected ascii test OTU 5678` | Configures a transmit or expected Trail Trace Identifier (TTI) that is displayed in the **show controller dwdm** command. |
| **Step 10** | **end** or **commit**<br>**Example:**<br>`RP/0/RSP0/CPU0:Router(config-dwdm)# end`<br>or<br>`RP/0/RSP0/CPU0:Router(config-dwdm)# commit` | Saves configuration changes.<br>• When you issue the **end** command, the system prompts you to commit changes:<br>`Uncommitted changes found, commit them before exiting(yes/no/cancel)? [cancel]:`<br>• Entering **yes** saves configuration changes to the running configuration file, exits the configuration session, and returns the router to EXEC mode.<br>• Entering **no** exits the configuration session and returns the router to EXEC mode without committing the configuration changes.<br>• Entering **cancel** leaves the router in the current configuration session without exiting or committing the configuration changes.<br>• Use the **commit** command to save the configuration changes to the running configuration file and remain within the configuration session. |
| **Step 11** | **admin-state in-service**<br>**Example:**<br>`RP/0/RSP0/CPU0:Router(config-dwdm)# admin-state in-service` | Places the DWDM port in In Service (IS) state, to support all normal operation. |
| **Step 12** | **show controllers dwdm** *interface-path-id* **g709**<br>**Example:**<br>`RP/0/RSP0/CPU0:Router# show controller dwdm 0/1/0/0 optics` | Displays the G.709 Optical Transport Network (OTN) protocol alarms and counters for Bit Errors, along with the FEC statistics and threshold-based alerts. |

### What to do next

All interface configuration tasks for the POS or Gigabit Ethernet interfaces still must be performed in interface configuration mode. Refer to the corresponding modules in this book for more information.

This task describes how to customize the alarm display and the thresholds for alerts and forward error correction (FEC). You need to use this task only if the default values are not correct for your installation.

# How to Perform Performance Monitoring on DWDM Controllers

Performance monitoring parameters are used to gather, store, set thresholds for, and report performance data for early detection of problems. Thresholds are used to set error levels for each performance monitoring parameter. During the accumulation cycle, if the current value of a performance monitoring parameter reaches or exceeds its corresponding threshold value, a threshold crossing alert (TCA) can be generated. The TCAs provide early detection of performance degradation.

Performance monitoring statistics are accumulated on a 15-minute basis, synchronized to the start of each quarter-hour. They are also accumulated on a daily basis starting at midnight. Historical counts are maintained for thirty-three 15-minute intervals and two daily intervals.

Performance monitoring is described in the following task:

## Configuring DWDM Controller Performance Monitoring

This task describes how to configure performance monitoring on DWDM controllers and how to display the performance parameters.

### SUMMARY STEPS

1. **configure**
2. **controller dwdm** *interface-path-id*
3. **pm** {**15-min** | **24-hour**} **fec threshold** {**ec-bits** | **uc-words**} *threshold*
4. **pm** {**15-min** | **24-hour**} **optics threshold** {**lbc** | **opr** | **opt**} {**max** | **min**} *threshold*
5. **pm** {**15-min** | **24-hour**} **otn threshold** *otn-parameter threshold*
6. **pm** {**15-min** | **24-hour**} **fec report** {**ec-bits** | **uc-words**} **enable**
7. **pm** {**15-min** | **24-hour**} **optics report** {**lbc** | **opr** | **opt**} {**max-tca** | **min-tca**} **enable**
8. **pm** {**15-min** | **24-hour**} **otn report** *otn-parameter* **enable**
9. **end** or **commit**

### DETAILED STEPS

| | Command or Action | Purpose |
|---|---|---|
| **Step 1** | **configure**<br>**Example:**<br>`RP/0/RSP0/CPU0:Router# configure` | Enters global configuration mode. |
| **Step 2** | **controller dwdm** *interface-path-id*<br>**Example:**<br>`RP/0/RSP0/CPU0:Router(config)# controller dwdm 0/1/0/0` | Specifies the DWDM controller name in the notation *rack/slot/module/port* and enters DWDM configuration mode. |
| **Step 3** | **pm** {**15-min** \| **24-hour**} **fec threshold** {**ec-bits** \| **uc-words**} *threshold*<br>**Example:** | Configures a performance monitoring threshold for specific parameters on the FEC layer. |

| | Command or Action | Purpose |
|---|---|---|
| | `RP/0/RSP0/CPU0:Router(config-dwdm)# pm 15-min fec threshold ec-bits 49000000`<br>`RP/0/RSP0/CPU0:Router(config-dwdm)# pm 15-min fec threshold uc-words xxxxxx` | |
| **Step 4** | **pm** {**15-min** \| **24-hour**} **optics threshold** {**lbc** \| **opr** \| **opt**} {**max** \| **min**} *threshold*<br>**Example:**<br>`RP/0/RSP0/CPU0:Router(config-dwdm)# pm 15-min optics threshold opt max xxx`<br>`RP/0/RSP0/CPU0:Router(config-dwdm)# pm 15-min optics threshold lbc min xxx` | Configures a performance monitoring threshold for specific parameters on the optics layer. |
| **Step 5** | **pm** {**15-min** \| **24-hour**} **otn threshold** *otn-parameter threshold*<br>**Example:**<br>`RP/0/RSP0/CPU0:Router(config-dwdm)# pm 15-min otn threshold bbe-pm-ne xxx`<br>`RP/0/RSP0/CPU0:Router(config-dwdm)# pm 15-min otn threshold es-sm-fe xxx` | Configures a performance monitoring threshold for specific parameters on the optical transport network (OTN) layer. OTN parameters can be as follows:<br>• **bbe-pm-fe**—Far-end path monitoring background block errors (BBE-PM)<br>• **bbe-pm-ne**—Near-end path monitoring background block errors (BBE-PM)<br>• **bbe-sm-fe**—Far-end section monitoring background block errors (BBE-SM)<br>• **bbe-sm-ne**—Near-end section monitoring background block errors (BBE-SM)<br>• **bber-pm-fe**—Far-end path monitoring background block errors ratio (BBER-PM)<br>• **bber-pm-ne**—Near-end path monitoring background block errors ratio (BBER-PM)<br>• **bber-sm-fe**—Far-end section monitoring background block errors ratio (BBER-SM)<br>• **bber-sm-ne**—Near-end section monitoring background block errors ratio (BBER-SM)<br>• **es-pm-fe**—Far-end path monitoring errored seconds (ES-PM)<br>• **es-pm-ne**—Near-end path monitoring errored seconds (ES-PM)<br>• **es-sm-fe**—Far-end section monitoring errored seconds (ES-SM)<br>• **es-sm-ne**—Near-end section monitoring errored seconds (ES-SM) |

| | Command or Action | Purpose |
|---|---|---|
| | | • **esr-pm-fe**—Far-end path monitoring errored seconds ratio (ESR-PM)<br>• **esr-pm-ne**—Near-end path monitoring errored seconds ratio (ESR-PM)<br>• **esr-sm-fe**—Far-end section monitoring errored seconds ratio (ESR-SM)<br>• **esr-sm-ne**—Near-end section monitoring errored seconds ratio (ESR-SM)<br>• **fc-pm-fe**—Far-end path monitoring failure counts (FC-PM)<br>• **fc-pm-ne**—Near-end path monitoring failure counts (FC-PM)<br>• **fc-sm-fe**—Far-end section monitoring failure counts (FC-SM)<br>• **fc-sm-ne**—Near-end section monitoring failure counts (FC-SM)<br>• **ses-pm-fe**—Far-end path monitoring severely errored seconds (SES-PM)<br>• **ses-pm-ne**—Near-end path monitoring severely errored seconds (SES-PM)<br>• **ses-sm-fe**—Far-end section monitoring severely errored seconds (SES-SM)<br>• **ses-sm-ne**—Near-end section monitoring severely errored seconds (SES-SM)<br>• **sesr-pm-fe**—Far-end path monitoring severely errored seconds ratio (SESR-PM)<br>• **sesr-pm-ne**—Near-end path monitoring severely errored seconds ratio (SESR-PM)<br>• **sesr-sm-fe**—Far-end section monitoring severely errored seconds ratio (SESR-SM)<br>• **sesr-sm-ne**—Near-end section monitoring severely errored seconds ratio (SESR-SM)<br>• **uas-pm-fe**—Far-end path monitoring unavailable seconds (UAS-PM)<br>• **uas-pm-ne**—Near-end path monitoring unavailable seconds (UAS-PM)<br>• **uas-sm-fe**—Far-end section monitoring unavailable seconds (UAS-SM) |

| | Command or Action | Purpose |
|---|---|---|
| | | • **uas-sm-ne**—Near-end section monitoring unavailable seconds (UAS-SM) |
| **Step 6** | **pm** {**15-min** \| **24-hour**} **fec report** {**ec-bits** \| **uc-words**} **enable**<br>**Example:**<br>`RP/0/RSP0/CPU0:Router(config-dwdm)# pm 15-min fec report ec-bits enable`<br>`RP/0/RSP0/CPU0:Router(config-dwdm)# pm 15-min fec report uc-words enable` | Configures threshold crossing alert (TCA) generation for specific parameters on the FEC layer. |
| **Step 7** | **pm** {**15-min** \| **24-hour**} **optics report** {**lbc** \| **opr** \| **opt**} {**max-tca** \| **min-tca**} **enable**<br>**Example:**<br>`RP/0/RSP0/CPU0:Router(config-dwdm)# pm 15-min optics report opt enable`<br>`RP/0/RSP0/CPU0:Router(config-dwdm)# pm 15-min optics report lbc enable` | Configures TCA generation for specific parameters on the optics layer. |
| **Step 8** | **pm** {**15-min** \| **24-hour**} **otn report** *otn-parameter* **enable**<br>**Example:**<br>`RP/0/RSP0/CPU0:Router(config-dwdm)# pm 15-min otn report bbe-pm-ne enable`<br>`RP/0/RSP0/CPU0:Router(config-dwdm)# pm 15-min otn report es-sm-fe enable` | Configures TCA generation for specific parameters on the optical transport network (OTN) layer. OTN parameters are shown in Step 5. |
| **Step 9** | **end** or **commit**<br>**Example:**<br>`RP/0/RSP0/CPU0:Router(config-dwdm)# end`<br>or<br>`RP/0/RSP0/CPU0:Router(config-dwdm)# commit` | Saves configuration changes.<br>• When you issue the **end** command, the system prompts you to commit changes:<br>`Uncommitted changes found, commit them before exiting(yes/no/cancel)? [cancel]:`<br>• Entering **yes** saves configuration changes to the running configuration file, exits the configuration session, and returns the router to EXEC mode.<br>• Entering **no** exits the configuration session and returns the router to EXEC mode without committing the configuration changes.<br>• Entering **cancel** leaves the router in the current configuration session without exiting or committing the configuration changes.<br>• Use the **commit** command to save the configuration changes to the running configuration file and remain within the configuration session. |

# Configuring IPoDWDM

This section provides the following configuration procedures:

## Configuring the Optical Layer DWDM Ports

Use this procedure to configure the Optical Layer DWDM ports.

### SUMMARY STEPS

1. **configure**
2. **controller dwdm** *interface-path-id*
3. **network srlg** *value1 value2 value3*
4. **network port id** *id-number*
5. **network connection id** *id-number*
6. **end** or **commit**

### DETAILED STEPS

| | Command or Action | Purpose |
|---|---|---|
| **Step 1** | **configure**<br>**Example:**<br>`RP/0/RSP0/CPU0:Router# config` | Enters global configuration mode. |
| **Step 2** | **controller dwdm** *interface-path-id*<br>**Example:**<br>`RP/0/RSP0/CPU0:Router(config)# controller dwdm 0/1/0/1` | Specifies the DWDM controller and enters DWDM controller mode. |
| **Step 3** | **network srlg** *value1 value2 value3*<br>**Example:**<br>`RP/0//CPU0:Router(config-dwdm)# network srlg value1 value2 value3` | Configures the Shared Risk Link Group (SRLG). |
| **Step 4** | **network port id** *id-number*<br>**Example:**<br>`RP/0/RSP0/CPU0:Router(config-dwdm)# network port id 1/0/1/1` | Assigns an identifier number to a port for the Multi Service Transport Protocol (MSTP). |
| **Step 5** | **network connection id** *id-number*<br>**Example:** | Configures a connection identifier for the Multi Service Transport Protocol (MSTP). |

| | Command or Action | Purpose |
|---|---|---|
| | `RP/0/RSP0/CPU0:Router(config-dwdm)# network connection id 1/1/1/1` | |
| **Step 6** | **end** or **commit**<br>**Example:**<br>`RP/0/RSP0/CPU0:Router(config-dwdm)# end`<br>or<br>`RP/0/RSP0/CPU0:Router(config-dwdm)# commit` | Saves configuration changes.<br>• When you issue the **end** command, the system prompts you to commit changes:<br>`Uncommitted changes found, commit them before exiting(yes/no/cancel)? [cancel]:`<br>• Entering **yes** saves configuration changes to the running configuration file, exits the configuration session, and returns the router to EXEC mode.<br>• Entering **no** exits the configuration session and returns the router to EXEC mode without committing the configuration changes.<br>• Entering **cancel** leaves the router in the current configuration session without exiting or committing the configuration changes.<br>• Use the **commit** command to save the configuration changes to the running configuration file and remain within the configuration session. |

# Configuring the Administrative State of DWDM Optical Ports

Use this procedure to configure the administrative state and optionally set the maintenance embargo flag.

### SUMMARY STEPS

1. **configure**
2. **controller dwdm** *interface-path-id*
3. **admin-state** {**in-service** | **maintenance** | **out-of-service**}
4. **exit**
5. **interface pos** *interface-path-id*
6. or
7. **interface tengige** *interface-path-id*
8. **maintenance disable**
9. **end** or **commit**

### DETAILED STEPS

| | Command or Action | Purpose |
|---|---|---|
| **Step 1** | **configure**<br>**Example:** | Enters global configuration mode. |

| | Command or Action | Purpose |
|---|---|---|
| | `RP/0/RSP0/CPU0:Router# config` | |
| **Step 2** | **controller dwdm** *interface-path-id*<br>**Example:**<br>`RP/0/RSP0/CPU0:Routerconfig)# controller dwdm 0/1/0/1` | Specifies the DWDM controller and enters DWDM controller mode. |
| **Step 3** | **admin-state** {**in-service** \| **maintenance** \| **out-of-service**}<br>**Example:**<br>`RP/0/RSP0/CPU0:Router(config-dwdm)# admin-state maintenance` | Specifies the transport administration state. |
| **Step 4** | **exit**<br>**Example:**<br>`RP/0/RSP0/CPU0:Router(config-dwdm)# exit` | Exits to the previous mode. |
| **Step 5** | **interface pos** *interface-path-id* | |
| **Step 6** | or | |
| **Step 7** | **interface tengige** *interface-path-id*<br>**Example:**<br>`RP/0/RSP0/CPU0:Router(config)# interface pos 1/0/1/1`<br>`or`<br>`RP/0/RSP0/CPU0:Router(config)# interface tengige 1/0/1/1` | Specifies the interface and enters interface configuration mode. |
| **Step 8** | **maintenance disable**<br>**Example:**<br>`RP/0/RSP0/CPU0:Router(config-if)# maintenance disable` | Provisions the maintenance embargo flag, which prevents maintenance activities from being performed on an interface. |
| **Step 9** | **end** or **commit**<br>**Example:**<br>`RP/0/RSP0/CPU0:Router(config-dwdm)# end`<br>or<br>`RP/0/RSP0/CPU0:Router(config-dwdm)# commit` | Saves configuration changes.<br>• When you issue the **end** command, the system prompts you to commit changes:<br>`Uncommitted changes found, commit them before exiting(yes/no/cancel)? [cancel]:`<br>• Entering **yes** saves configuration changes to the running configuration file, exits the configuration session, and returns the router to EXEC mode. |

| | Command or Action | Purpose |
|---|---|---|
| | | • Entering **no** exits the configuration session and returns the router to EXEC mode without committing the configuration changes.<br>• Entering **cancel** leaves the router in the current configuration session without exiting or committing the configuration changes.<br>• Use the **commit** command to save the configuration changes to the running configuration file and remain within the configuration session. |

# Configuring Proactive FEC-FRR Triggering

Use this procedure to configure automatic triggering of Forward Error Correction-Fast Re-Route (FEC-FRR).

### SUMMARY STEPS

1. **configure**
2. **controller dwdm** *interface-path-id*
3. **proactive**
4. **logging signal** *file-name*
5. **proactive trigger threshold** *x-coefficient y-power*
6. **proactive trigger window** *window*
7. **proactive revert threshold** *x-coefficient y-power*
8. **proactive revert window** *window*
9. **end** or **commit**

### DETAILED STEPS

| | Command or Action | Purpose |
|---|---|---|
| **Step 1** | **configure**<br>**Example:**<br>`RP/0/RSP0/CPU0:Router# config` | Enters global configuration mode. |
| **Step 2** | **controller dwdm** *interface-path-id*<br>**Example:**<br>`RP/0/RSP0/CPU0:Router(config)# controller dwdm 0/1/0/1` | Specifies the DWDM controller and enters DWDM controller mode. |
| **Step 3** | **proactive**<br>**Example:**<br>`RP/0/RSP0/CPU0:Router(config-dwdm)# proactive enable` | Enables automatic triggering of FEC-FRR. |

| | Command or Action | Purpose |
|---|---|---|
| **Step 4** | **logging signal** *file-name*<br>**Example:**<br>`RP/0/RSP0/CPU0:Router(config-dwdm)# logging signal LogFile1` | Enables10 millisecond proactive monitoring of FEC-FRR. |
| **Step 5** | **proactive trigger threshold** *x-coefficient y-power*<br>**Example:**<br>`RP/0/RSP0/CPU0:Routerconfig-dwdm)# proactive trigger threshold 1 9` | Configures the trigger threshold of FEC-FRR in the form of *x*E-*y*. |
| **Step 6** | **proactive trigger window** *window*<br>**Example:**<br>`RP/0/RSP0/CPU0:Router(config-dwdm)# proactive trigger window 10000` | Configures the trigger window (in milliseconds) in which FRR may be triggered. |
| **Step 7** | **proactive revert threshold** *x-coefficient y-power*<br>**Example:**<br>`RP/0/RSP0/CPU0:Router(config-dwdm)# proactive revert threshold 1 9` | Configures the revert threshold (in the form of *x*E-*y*) to trigger reverting from the FEC-FRR route back to the original route. |
| **Step 8** | **proactive revert window** *window*<br>**Example:**<br>`RP/0/RSP0/CPU0:Router(config-dwdm)# proactive revert window 600000` | Configures the revert window in which reverting from the FEC-FRR route back to the original route is triggered. |
| **Step 9** | **end** or **commit**<br>**Example:**<br>`RP/0/RSP0/CPU0:Router(config-dwdm)# end`<br>or<br>`RP/0/RSP0/CPU0:Router(config-dwdm)# commit` | Saves configuration changes.<br>• When you issue the **end** command, the system prompts you to commit changes:<br>`Uncommitted changes found, commit them before exiting(yes/no/cancel)? [cancel]:`<br>• Entering **yes** saves configuration changes to the running configuration file, exits the configuration session, and returns the router to EXEC mode.<br>• Entering **no** exits the configuration session and returns the router to EXEC mode without committing the configuration changes.<br>• Entering **cancel** leaves the router in the current configuration session without exiting or committing the configuration changes. |

| | Command or Action | Purpose |
|---|---|---|
| | | • Use the **commit** command to save the configuration changes to the running configuration file and remain within the configuration session. |

# Configuration Examples

This section includes these examples:

## Turning On the Laser: Example

**Note** This is a required configuration. The DWDM cards will not operate without this configuration.

This example shows how to turn on the laser and place a DWDM port in In Service (IS) state:

```
RP/0/RP0/CPU0:router# configure
RP/0/RP0/CPU0:Router(config)# controller dwdm 0/1/0/1
RP/0/RP0/CPU0:Router(config-dwdm)# admin-state in-service
RP/0/RP0/CPU0:Router(config-dwdm)# commit
```

## Turning Off the Laser: Example

This example shows how to turn off the laser, stop all traffic and place a DWDM port in Out of Service (OOS) state:

```
RP/0/RP0/CPU0:router# configure
RP/0/RP0/CPU0:Router(config)# controller dwdm 0/1/0/1
RP/0/RP0/CPU0:Router(config-dwdm)# admin-state out-of-service
RP/0/RP0/CPU0:Router(config-dwdm)# commit
```

## DWDM Controller Configuration: Examples

This example shows how to customize the alarm display and the thresholds for alerts and forward error correction (FEC):

```
RP/0/RSP0/CPU0:Router# configure
RP/0/RSP0/CPU0:Router(config)# controller dwdm 0/1/0/0
RP/0/RSP0/CPU0:Router(config-dwdm)# maintenance out-of-service
RP/0/RSP0/CPU0:Router(config-dwdm)# commit
RP/0/RSP0/CPU0:Router(config-dwdm)# g709 disable
RP/0/RSP0/CPU0:Router(config-dwdm)# loopback internal
RP/0/RSP0/CPU0:Router(config-dwdm)# g709 fec standard
RP/0/RSP0/CPU0:Router(config-dwdm)# g709 odu bdi disable
RP/0/RSP0/CPU0:Router(config-dwdm)# maintenance in-service
RP/0/RSP0/CPU0:Router(config-dwdm)# commit
```

# DWDM Performance Monitoring: Examples

This example shows how to configure performance monitoring for the optics parameters and how to display the configuration and current statistics:

```
RP/0/RSP0/CPU0:Router# configure
RP/0/RSP0/CPU0:Router(config)# controller dwdm 0/2/0/0

RP/0/RSP0/CPU0:Router(config-dwdm)# pm 15-min optics threshold opt max 2000000
RP/0/RSP0/CPU0:Router(config-dwdm)# pm 15-min optics threshold opt min 200
RP/0/RSP0/CPU0:Router(config-dwdm)# pm 15-min optics threshold lbc max 3000000
RP/0/RSP0/CPU0:Router(config-dwdm)# pm 15-min optics threshold lbc min 300
RP/0/RSP0/CPU0:Router(config-dwdm)# pm 15-min optics threshold opr max 4000000
RP/0/RSP0/CPU0:Router(config-dwdm)# pm 15-min optics threshold opr min 400
RP/0/RSP0/CPU0:Router(config-dwdm)# pm 15-min optics report opt max-tca enable
RP/0/RSP0/CPU0:Router(config-dwdm)# pm 15-min optics report opt min-tca enable
RP/0/RSP0/CPU0:Router(config-dwdm)# pm 15-min optics report opr max-tca enable
RP/0/RSP0/CPU0:Router(config-dwdm)# pm 15-min optics report opr min-tca enable
RP/0/RSP0/CPU0:Router(config-dwdm)# pm 15-min optics report lbc max-tca enable
RP/0/RSP0/CPU0:Router(config-dwdm)# pm 15-min optics report lbc min-tca enable
RP/0/RSP0/CPU0:Router(config-dwdm)# exit
RP/0/RSP0/CPU0:Router(config)# exit

Uncommitted changes found, commit them before exiting(yes/no/cancel)? [cancel]:y

LC/0/2/CPU0:Jul 12 04:10:47.252 : plim_4p_10ge_dwdm[194]: %L1-PMENGINE-4-TCA : Port DWDM
0/2/0/0 reports OPTICS TX-PWR-MIN(NE) PM TCA with current value 0, threshold 200 in current
 15-min interval window
LC/0/2/CPU0:Jul 12 04:10:47.255 : plim_4p_10ge_dwdm[194]: %L1-PMENGINE-4-TCA : Port DWDM
0/2/0/0 reports OPTICS RX-PWR-MIN(NE) PM TCA with current value 68, threshold 400 in current
 15-min interval window
RP/0/RP1/CPU0:Jul 12 04:09:05.443 : config[65678]: %MGBL-CONFIG-6-DB_COMMIT : Configuration
 committed by user 'lab'. Use 'show configuration commit changes 1000000001' to view the
changes.
RP/0/RP1/CPU0:Jul 12 04:09:05.604 : config[65678]: %MGBL-SYS-5-CONFIG_I : Configured from
console by lab

RP/0/RSP0/CPU0:Router# show controllers dwdm 0/2/0/0 pm interval 15-min optics 0

Optics in the current interval [ 4:15:00 - 04:26:02 Wed Jul 12 2006]
             MIN     AVG     MAX  Threshold  TCA  Threshold  TCA
                                  (min)  (enable) (max)  (enable)
LBC[mA ] :  3605    4948    6453    300        YES     3000000   YES
OPT[uW]  :  2593    2593    2593    200        YES     2000000   YES
OPR[uW]  :  69      69      70      400        YES     4000000   YES
```

# IPoDWDM Configuration: Examples

This section includes the following examples:

## Optical Layer DWDM Port Configuration: Examples

This example shows how to configure Optical Layer DWDM ports.

```
RP/0/RSP0/CPU0:Router# configure
RP/0/RSP0/CPU0:Router(config)# controller dwdm 0/1/0/1
RP/0/RP0/CPU0:Router(config-dwdm)# network srlg value1 value2 value3
```

```
RP/0/RSP0/CPU0:Router(config-dwdm)# network port id 1/0/1/1
RP/0/RSP0/CPU0:Router(config-dwdm)# network connection id 1/1/1/1
```

## Administrative State of DWDM Optical Ports Configuration: Examples

The following examples show how to configure the administrative state and optionally set the maintenance embargo flag:

### For TenGigabit Interface

```
RP/0/RSP0/CPU0:Router# configure
RP/0/RSP0/CPU0:Router(config)# controller dwdm 0/1/0/1
RP/0/RSP0/CPU0:Router(config-dwdm)# admin-state in-service
RP/0/RSP0/CPU0:Router(config-dwdm)# exit
RP/0/RSP0/CPU0:Router(config)# interface tengige 1/0/1/1
RP/0/RSP0/CPU0:Router(config-if)# maintenance disable
RP/0/RSP0/CPU0:Router(config-if)# commit
```

## Proactive FEC-FRR Triggering Configuration: Examples

This example shows how to configure automatic triggering of Forward Error Correction-Fast Re-Route (FEC-FRR):

```
RP/0/RSP0/CPU0:Router# configure
RP/0/RSP0/CPU0:Router(config)# controller dwdm 0/1/0/1
RP/0/RSP0/CPU0:Router(config-dwdm)#proactive
RP/0/RSP0/CPU0:Router(config-dwdm)# logging signal LogFile1
RP/0/RSP0/CPU0:Router(config-dwdm)# proactive trigger threshold 1 9
RP/0/RSP0/CPU0:Router(config-dwdm)# proactive trigger window 10000
RP/0/RSP0/CPU0:Router(config-dwdm)# proactive revert threshold 1 9
RP/0/RSP0/CPU0:Router(config-dwdm)# proactive revert window 600000
```

CHAPTER 16

# Configuring POS Interfaces

This module describes the configuration of Packet-over-SONET/SDH (POS) interfaces.

POS interfaces provide secure and reliable data transmission over SONET and Synchronous Digital Hierarchy (SDH) frames using Cisco High-Level Data Link Control (HDLC) protocol or Point-to-Point Protocol (PPP) encapsulation. In addition to Cisco HDLC and PPP encapsulation, the Cisco ASR 9000 Series Router supports Frame Relay encapsulation.

The commands for configuring Layer 1 POS interfaces are provided in the *Cisco IOS XR Interface and Hardware Component Command Reference*.

### Feature History for Configuring POS Interfaces

| Release | Modification |
|---|---|
| Release 4.0.0 | This feature was introduced on the Cisco ASR 9000 Series Router on the following SPAs:<br>• Cisco 1-Port Channelized OC-48/STM-16 SPA<br>• Cisco 2-Port Channelized OC-12c/DS0 SPA<br>• Cisco 1-Port OC-192c/STM-64 POS/RPR XFP SPA<br>• Cisco 2-Port OC-48c/STM-16 POS/RPR SPA<br>• Cisco 8-Port OC-12c/STM-4 POS SPA |
| Release 4.0.1 | Support for the following SPAs was added on the Cisco ASR 9000 Series Router:<br>• Cisco 4-Port OC-3c/STM-1 POS SPA<br>• Cisco 8-Port OC-3c/STM-1 POS SPA |


- Prerequisites for Configuring POS Interfaces, on page 564
- Information About Configuring POS Interfaces, on page 564
- How to Configure a POS Interface, on page 569
- How to Configure a Layer 2 Attachment Circuit, on page 580
- Configuration Examples for POS Interfaces, on page 586

# Prerequisites for Configuring POS Interfaces

You must be in a user group associated with a task group that includes the proper task IDs. The command reference guides include the task IDs required for each command. If you suspect user group assignment is preventing you from using a command, contact your AAA administrator for assistance.

Before configuring POS interfaces, be sure that the following conditions are met:

- You know the IP address of the interface you will assign to the new POS interface configuration.
- You have configured a clear channel or channelized SONET controller, as described in the Configuring Clear Channel SONET Controllers, on page 479 or Configuring Channelized SONET/SDH, on page 391 modules.

# Information About Configuring POS Interfaces

To configure POS interfaces, you must understand the following concepts:

On the Cisco ASR 9000 Series Router, a single POS interface carries data using PPP, Cisco HDLC, or Frame Relay encapsulation.

The router identifies the POS interface address by the physical layer interface module (PLIM) card rack number, slot number, bay number, and port number that are associated with that interface. If a subinterface and permanent virtual circuits (PVCs) are configured under the POS interface, then the router includes the subinterface number in the POS interface path ID.

## Default Settings for POS Interfaces

When a POS interface is brought up and no additional configuration commands are applied, the default interface settings shown in this table are present. These default settings can be changed by configuration.

***Table 21: POS Modular Services Card and PLIM Default Interface Settings***

| Parameter | Configuration File Entry | Default Settings |
|---|---|---|
| Keepalive<br>**Note** The **keepalive** command applies to POS interfaces using HDLC or PPP encapsulation. It does not apply to POS interfaces using Frame Relay encapsulation. | **keepalive** {*interval* [*retry*] \| **disable**} **no keepalive** | Interval of 10 seconds<br>Retry of:<br>• 5 (with PPP encapsulation)<br>• 3 (with HDLC encapsulation) |
| Encapsulation | **encapsulation** [**hdlc** \| **ppp** \| **frame-relay** [**IETF**]] | **hdlc** |
| Maximum transmission unit (MTU) | **mtu** *bytes* | 4474 bytes |

| Parameter | Configuration File Entry | Default Settings |
|---|---|---|
| Cyclic redundancy check (CRC) | **crc** [**16** \| **32**] | **32** |

**Note** Default settings do not appear in the output of the **show running-config** command.

# Cisco HDLC Encapsulation

*Cisco High-Level Data Link Controller* (HDLC) is the Cisco proprietary protocol for sending data over synchronous serial links using HDLC. Cisco HDLC also provides a simple control protocol called Serial Line Address Resolution Protocol (SLARP) to maintain serial link keepalives. HDLC is the default encapsulation type for serial interfaces under Cisco IOS XR software. Cisco HDLC is the default for data encapsulation at Layer 2 (data link) of the Open System Interconnection (OSI) stack for efficient packet delineation and error control.

**Note** Cisco HDLC is the default encapsulation type for the serial interfaces.

Cisco HDLC uses keepalives to monitor the link state, as described in the Keepalive Timer.

# PPP Encapsulation

PPP is a standard protocol used to send data over synchronous serial links. PPP also provides a Link Control Protocol (LCP) for negotiating properties of the link. LCP uses echo requests and responses to monitor the continuing availability of the link.

**Note** When an interface is configured with PPP encapsulation, a link is declared down, and full LCP negotiation is re-initiated after three ECHOREQ packets are sent without receiving an ECHOREP response.

PPP provides the following Network Control Protocols (NCPs) for negotiating the properties of data protocols that run on the link:

- IP Control Protocol (IPCP)—negotiates IP properties
- Multiprotocol Label Switching control processor (MPLSCP)—negotiates MPLS properties
- Cisco Discovery Protocol control processor (CDPCP)—negotiates CDP properties
- IPv6CP—negotiates IP Version 6 (IPv6) properties
- Open Systems Interconnection control processor (OSICP)—negotiates OSI properties

PPP uses keepalives to monitor the link state, as described in the Keepalive Timer.

PPP supports the following authentication protocols, which require a remote device to prove its identity before allowing data traffic to flow over a connection:

- Challenge Handshake Authentication Protocol (CHAP)—CHAP authentication sends a challenge message to the remote device. The remote device encrypts the challenge value with a shared secret and returns the encrypted value and its name to the local router in a response message. The local router attempts to match the remote device's name with an associated secret stored in the local username or remote security server database; it uses the stored secret to encrypt the original challenge and verify that the encrypted values match.
- Microsoft Challenge Handshake Authentication Protocol (MS-CHAP)—MS-CHAP is the Microsoft version of CHAP. Like the standard version of CHAP, MS-CHAP is used for PPP authentication; in this case, authentication occurs between a personal computer using Microsoft Windows NT or Microsoft Windows 95 and a Cisco router or access server acting as a network access server.
- Password Authentication Protocol (PAP)—PAP authentication requires the remote device to send a name and a password, which are checked against a matching entry in the local username database or in the remote security server database.

**Note** For more information on enabling and configuring PPP authentication protocols, see the Configuring PPP Authentication, on page 669 module later in this manual.

Use the **ppp authentication** command in interface configuration mode to enable CHAP, MS-CHAP, and PAP on a POS interface.

**Note** Enabling or disabling PPP authentication does not effect the local router's willingness to authenticate itself to the remote device.

# Keepalive Timer

Cisco keepalives are useful for monitoring the link state. Periodic keepalives are sent to and received from the peer at a frequency determined by the value of the keepalive timer. If an acceptable keepalive response is not received from the peer, the link makes the transition to the down state. As soon as an acceptable keepalive response is obtained from the peer or if keepalives are disabled, the link makes the transition to the up state.

If three keepalives are sent to the peer and no response is received from peer, then the link makes the transition to the down state. ECHOREQ packets are sent out only when LCP negotiation is complete (for example, when LCP is open).

**Note** The **keepalive** command applies to POS interfaces using HDLC or PPP encapsulation. It does not apply to POS interfaces using Frame Relay encapsulation.

Use the **keepalive** command in interface configuration mode to set the frequency at which LCP sends ECHOREQ packets to its peer. To restore the system to the default keepalive interval of 10 seconds, use the **keepalive** command with **no** argument. To disable keepalives, use the **keepalive disable** command. For both PPP and Cisco HDLC, a keepalive of 0 disables keepalives and is reported in the **show running-config** command output as **keepalive disable**.

To remove the **keepalive** command from the configuration entirely, use the **no keepalive** command. You must remove the **keepalive** command from an interface configuration before you can configure Frame Relay encapsulation on that interface. Frame Relay interfaces do not support keepalives.

**Note** During MDR, the keepalive interval must be 10 seconds or more.

When LCP is running on the peer and receives an ECHOREQ packet, it responds with an echo reply (ECHOREP) packet, regardless of whether keepalives are enabled on the peer.

Keepalives are independent between the two peers. One peer end can have keepalives enabled while the other end has them disabled. Even if keepalives are disabled locally, LCP still responds with ECHOREP packets to the ECHOREQ packets it receives. Similarly, LCP also works if the period of keepalives at each end is different.

**Note** Use the **debug chdlc slarp packet** command and other Cisco HDLC **debug** commands to display information about the Serial Line Address Resolution Protocol (SLARP) packets that are sent to the peer after the keepalive timer has been configured.

# Frame Relay Encapsulation

On the Cisco ASR 9000 Series Router, Frame Relay encapsulated POS interface configuration is hierarchical and comprises the following elements:

1. The POS main interface is comprised of the physical interface and port. If you are not using the POS interface to support Cisco HDLC and PPP encapsulated connections, then you must configure subinterfaces with PVCs under the POS main interface. Frame Relay connections are supported on PVCs only.
2. POS subinterfaces are configured under the POS main interface. A POS subinterface does not actively carry traffic until you configure a PVC under the POS subinterface.
3. Point-to-point and Layer 2 attachment circut (AC) PVCs are configured under a POS subinterface. You cannot configure a PVC directly under a main interface. A single point-to-point or L2 AC PVC is allowed per subinterface. PVCs use a predefined circuit path and fail if the path is interrupted. PVCs remain active until the circuit is removed. Connections on the POS PVC support Frame Relay encapsulation only.
4. Layer 3 configuration typically takes place on the subinterface.

**Note** The administrative state of a parent interface drives the state of the subinterface and its PVC. When the administrative state of a parent interface or subinterface changes, so does the administrative state of any child PVC configured under that parent interface or subinterface.

On the Cisco ASR 9000 Series Router, the following SPAs support Frame Relay encapsulation:

- Cisco 4-Port OC-3c/STM-1 POS SPA
- Cisco 8-Port OC-3c/STM-1 POS SPA

- Cisco 1-Port OC-192c/STM-64 POS/RPR XFP SPA
- Cisco 2-Port OC-48c/STM-16 POS/RPR SPA
- Cisco 8-Port OC-12c/STM-4 POS SPA

To configure Frame Relay encapsulation on POS interfaces, use the encapsulation frame-relay command.

Frame Relay interfaces support two types of encapsulated frames:

- Cisco (this is the default)
- IETF

Use the **encap** command in PVC configuration mode to configure Cisco or IETF encapsulation on a PVC. If the encapsulation type is not configured explicitly for a PVC, then that PVC inherits the encapsulation type from the main POS interface

**Note** Cisco encapsulation is required on POS main interfaces that are configured for MPLS. IETF encapsulation is not supported for MPLS.

Before you configure Frame Relay encapsulation on an interface, you must verify that all prior Layer 3 configuration is removed from that interface. For example, you must ensure that there is no IP address configured directly under the main interface; otherwise, any Frame Relay configuration done under the main interface will not be viable.

## LMI on Frame Relay Interfaces

The Local Management Interface (LMI) protocol monitors the addition, deletion, and status of PVCs. LMI also verifies the integrity of the link that forms a Frame Relay UNI interface. By default, **cisco** LMI is enabled on all PVCs. However, you can modify the default LMI type to be ANSI or Q.933, as described in the Modifying the Default Frame Relay Configuration on an Interface, on page 636 module later in this manual.

If the LMI type is **cisco** (the default LMI type), the maximum number of PVCs that can be supported under a single interface is related to the MTU size of the main interface. Use the following formula to calculate the maximum number of PVCs supported on a card or SPA:

```
(MTU - 13)/8 = maximum number of PVCs
```

**Note** The default setting of the **mtu** command for a POS interface is 4474 bytes. Therefore, the default numbers of PVCs supported on a POS interface configured with **cisco** LMI is 557.

You must configure the LMI interface type on Frame Relay interfaces; otherwise, the POS interface does not come up. For connections between Provider Edge (PE) and Customer Edge (CE) routers, the PE end must be DCE and the CE end must be DTE for LMI to come up. For more information about configuring the LMI interface type on a Frame Relay interface, see the Configuring Frame Relay, on page 625 module.

# How to Configure a POS Interface

This section contains the following procedures:

## Bringing Up a POS Interface

This task describes the commands you can use to bring up a POS interface.

**Before you begin**

You must have a POS line card or SPA installed in a router that is running Cisco IOS XR software.

**Restrictions**

The configuration on both ends of the POS connection must match for the interface to be active.

### SUMMARY STEPS

1. **show interfaces**
2. **configure**
3. **interface pos** *interface-path-id*
4. **ipv4 address** *ipv4_address/prefix*
5. **no shutdown**
6. **end** or **commit**
7. **exit**
8. **exit**
9. Repeat Step 1 through Step 8 to bring up the interface at the other end of the connection.
10. **show ipv4 interface brief**
11. **show interfaces pos** *interface-path-id*

### DETAILED STEPS

| | Command or Action | Purpose |
|---|---|---|
| **Step 1** | **show interfaces**<br>**Example:**<br>`RP/0/RSP0/CPU0:router# show interfaces` | (Optional) Displays configured interfaces.<br>• Use this command to also confirm that the router recognizes the PLIM card. |
| **Step 2** | **configure**<br>**Example:**<br>`RP/0/RSP0/CPU0:router# configure` | Enters global configuration mode. |
| **Step 3** | **interface pos** *interface-path-id*<br>**Example:**<br>`RP/0/RSP0/CPU0:router(config)# interface POS 0/3/0/0` | Specifies the POS interface name and notation *rack/slot/module/port*, and enters interface configuration mode. |

| | Command or Action | Purpose |
|---|---|---|
| **Step 4** | **ipv4 address** *ipv4_address/prefix*<br>**Example:**<br>`RP/0/RSP0/CPU0:router (config)#ipv4 address 10.46.8.6/24` | Assigns an IP address and subnet mask to the interface.<br>**Note** • Skip this step if you are configuring Frame Relay encapsulation on this interface. For Frame Relay, the IP address and subnet mask are configured under the subinterface. |
| **Step 5** | **no shutdown**<br>**Example:**<br>`RP/0/RSP0/CPU0:router (config-if)# no shutdown` | Removes the shutdown configuration.<br>**Note** • Removal of the shutdown configuration eliminates the forced administrative down on the interface, enabling it to move to an up or down state (assuming the parent SONET layer is not configured administratively down). |
| **Step 6** | **end** or **commit**<br>**Example:**<br>`RP/0/RSP0/CPU0:router (config-if)# end`<br>or<br>`RP/0/RSP0/CPU0:router(config-if)# commit` | Saves configuration changes.<br>• When you issue the **end** command, the system prompts you to commit changes:<br>`Uncommitted changes found, commit them before exiting(yes/no/cancel)? [cancel]:`<br>- Entering **yes** saves configuration changes to the running configuration file, exits the configuration session, and returns the router to EXEC mode.<br>- Entering **no** exits the configuration session and returns the router to EXEC mode without committing the configuration changes.<br>- Entering **cancel** leaves the router in the current configuration session without exiting or committing the configuration changes.<br>• Use the **commit** command to save the configuration changes to the running configuration file and remain within the configuration session. |
| **Step 7** | **exit**<br>**Example:**<br>`RP/0/RSP0/CPU0:router (config-if)# exit` | Exits interface configuration mode and enters global configuration mode. |
| **Step 8** | **exit**<br>**Example:**<br>`RP/0/RSP0/CPU0:router (config)# exit` | Exits global configuration mode and enters EXEC mode. |

| | Command or Action | Purpose |
|---|---|---|
| **Step 9** | Repeat Step 1 through Step 8 to bring up the interface at the other end of the connection.<br>**Example:**<br>`RP/0/RSP0/CPU0:router# show interfaces`<br>`RP/0/RSP0/CPU0:router# configure`<br>`RP/0/RSP0/CPU0:router (config)# interface pos 0/3/0/0`<br>`RP/0/RSP0/CPU0:router (config-if)# no shutdown`<br>`RP/0/RSP0/CPU0:router (config-if)# commit`<br>`RP/0/RSP0/CPU0:router (config-if)# exit`<br>`RP/0/RSP0/CPU0:router (config)# exit` | **Note** • The configuration on both ends of the POS connection must match. |
| **Step 10** | **show ipv4 interface brief**<br>**Example:**<br>`RP/0/RSP0/CPU0:router # show ipv4 interface brief` | Verifies that the interface is active and properly configured.<br>If you have brought up a POS interface properly, the "Status" field for that interface in the **show ipv4 interface brief** command output shows "Up." |
| **Step 11** | **show interfaces pos** *interface-path-id*<br>**Example:**<br>`RP/0/RSP0/CPU0:router# show interfaces pos 0/3/0/0` | (Optional) Displays the interface configuration. |

### What to do next

To modify the default configuration of the POS interface you just brought up, see the "Configuring Optional POS Interface Parameters" section on page 594.

# Configuring Optional POS Interface Parameters

This task describes the commands you can use to modify the default configuration on a POS interface.

### Before you begin

Before you modify the default POS interface configuration, you must bring up the POS interface and remove the shutdown configuration, as described in the Bringing Up a POS Interface.

### Restrictions

The configuration on both ends of the POS connection must match for the interface to be active.

## SUMMARY STEPS

1. **configure**
2. **interface pos** *interface-path-id*
3. **encapsulation** [**hdlc** | **ppp** | **frame-relay** [**IETF**]]
4. **pos crc** {**16** | **32**}

5. **mtu** *value*
6. **end** or **commit**
7. **exit**
8. **exit**
9. **show interfaces pos** [*interface-path-id*]

## DETAILED STEPS

| | Command or Action | Purpose |
|---|---|---|
| **Step 1** | **configure**<br>**Example:**<br>`RP/0/RSP0/CPU0:router# configure` | Enters global configuration mode. |
| **Step 2** | **interface pos** *interface-path-id*<br>**Example:**<br>`RP/0/RSP0/CPU0:router(config)# interface POS 0/3/0/0` | Specifies the POS interface name and notation *rack/slot/module/port*, and enters interface configuration mode. |
| **Step 3** | **encapsulation** [**hdlc** \| **ppp** \| **frame-relay** [**IETF**]]<br>**Example:**<br>`RP/0/RSP0/CPU0:router(config-if)# encapsulation hdlc` | (Optional) Configures the interface encapsulation parameters and details such as HDLC or PPP.<br>**Note** • The default encapsulation is **hdlc**. |
| **Step 4** | **pos crc** {**16** \| **32**}<br>**Example:**<br>`RP/0/RSP0/CPU0:router(config-if)# pos crc 32` | (Optional) Configures the CRC value for the interface. Enter the **16** keyword to specify 16-bit CRC mode, or enter the **32** keyword to specify 32-bit CRC mode.<br>**Note** • The default CRC is **32**. |
| **Step 5** | **mtu** *value*<br>**Example:**<br>`RP/0/RSP0/CPU0:router(config-if)# mtu 4474` | (Optional) Configures the MTU value.<br>• The default value is 4474.<br>• The POS MTU range is 64–9216. |
| **Step 6** | **end** or **commit**<br>**Example:**<br>`RP/0/RSP0/CPU0:router (config-if)# end`<br>or<br>`RP/0/RSP0/CPU0:router(config-if)# commit` | Saves configuration changes.<br>• When you issue the **end** command, the system prompts you to commit changes:<br>`Uncommitted changes found, commit them before exiting(yes/no/cancel)? [cancel]:`<br>- Entering **yes** saves configuration changes to the running configuration file, exits the configuration session, and returns the router to EXEC mode. |

| | Command or Action | Purpose |
|---|---|---|
| | | - Entering **no** exits the configuration session and returns the router to EXEC mode without committing the configuration changes.<br>- Entering **cancel** leaves the router in the current configuration session without exiting or committing the configuration changes.<br>• Use the **commit** command to save the configuration changes to the running configuration file and remain within the configuration session. |
| **Step 7** | **exit**<br>**Example:**<br>`RP/0/RSP0/CPU0:router (config-if)# exit` | Exits interface configuration mode and enters global configuration mode. |
| **Step 8** | **exit**<br>**Example:**<br>`RP/0/RSP0/CPU0:router (config)# exit` | Exits global configuration mode and enters EXEC mode. |
| **Step 9** | **show interfaces pos** [*interface-path-id*]<br>**Example:**<br>`RP/0/RSP0/CPU0:router# show interface pos 0/3/0/0` | (Optional) Displays general information for the specified POS interface. |

### What to do next

- To create a point-to-point Frame Relay subinterface with a PVC on the POS interface you just brought up, see the “Creating a Point-to-Point POS Subinterface with a PVC” section on page 596.
- To configure PPP authentication on POS interfaces where PPP encapsulation is enabled, see the Configuring PPP on the Cisco ASR 9000 Series Router module later in this manual.
- To modify the keepalive interval on POS interfaces that have Cisco HDLC or PPP encapsulation enabled, see the “Modifying the Keepalive Interval on POS Interfaces” section on page 601.
- To modify the default Frame Relay configuration on POS interfaces that have Frame Relay encapsulation enabled, see the “Modifying the Default Frame Relay Configuration on an Interface” of the Configuring Frame Relay on the Cisco ASR 9000 Series Router module in this manual.

## Creating a Point-to-Point POS Subinterface with a PVC

The procedure in this section creates a point-to-point POS subinterface and configures a permanent virtual circuit (PVC) on that POS subinterface.

**Note** Subinterface and PVC creation is supported on interfaces with Frame Relay encapsulation only.

### Before you begin

Before you can create a subinterface on a POS interface, you must bring up the main POS interface with Frame Relay encapsulation, as described in the Bringing Up a POS Interface.

### Restrictions

Only one PVC can be configured for each point-to-point POS subinterface.

## SUMMARY STEPS

1. **configure**
2. **interface pos** *interface-path-id.subinterface* **point-to-point**
3. **ipv4 address** *ipv4_address/prefix*
4. **pvc** *dlci*
5. **end** or **commit**
6. Repeat Step 1 through Step 5 to bring up the POS subinterface and any associated PVC at the other end of the connection.

## DETAILED STEPS

| | Command or Action | Purpose |
|---|---|---|
| **Step 1** | **configure**<br>**Example:**<br>`RP/0/RSP0/CPU0:router# configure` | Enters global configuration mode. |
| **Step 2** | **interface pos** *interface-path-id.subinterface* **point-to-point**<br>**Example:**<br>`RP/0/RSP0/CPU0:router (config)# interface pos 0/3/0/0.1 point-to-point` | Enters POS subinterface configuration mode.<br>Replace *subinterface* with a subinterface ID, in the range from 1 through 4294967295. |
| **Step 3** | **ipv4 address** *ipv4_address/prefix*<br>**Example:**<br>`RP/0/RSP0/CPU0:router (config-subif)#ipv4 address 10.46.8.6/24` | Assigns an IP address and subnet mask to the subinterface. |
| **Step 4** | **pvc** *dlci*<br>**Example:**<br>`RP/0/RSP0/CPU0:router (config-subif)# pvc 20` | Creates a POS permanent virtual circuit (PVC) and enters Frame Relay PVC configuration submode.<br>Replace *dlci* with a PVC identifier, in the range from 16 to 1007.<br>**Note** • Only one PVC is allowed per subinterface. |

| | Command or Action | Purpose |
|---|---|---|
| **Step 5** | **end** or **commit**<br>**Example:**<br>`RP/0/RSP0/CPU0:router (config-fr-vc)# end`<br>or<br>`RP/0/RSP0/CPU0:router(config-fr-vc)# commit` | Saves configuration changes.<br>• When you issue the **end** command, the system prompts you to commit changes:<br>`Uncommitted changes found, commit them before exiting(yes/no/cancel)? [cancel]:`<br>- Entering **yes** saves configuration changes to the running configuration file, exits the configuration session, and returns the router to EXEC mode.<br>- Entering **no** exits the configuration session and returns the router to EXEC mode without committing the configuration changes.<br>- Entering **cancel** leaves the router in the current configuration session without exiting or committing the configuration changes.<br>• Use the **commit** command to save the configuration changes to the running configuration file and remain within the configuration session. |
| **Step 6** | Repeat Step 1 through Step 5 to bring up the POS subinterface and any associated PVC at the other end of the connection.<br>**Example:**<br>`RP/0/RSP0/CPU0:router# configure`<br>`RP/0/RSP0/CPU0:router (config)# interface pos 0/3/0/1.1`<br>`RP/0/RSP0/CPU0:router (config-subif)#ipv4 address 10.46.8.5/24`<br>`RP/0/RSP0/CPU0:router (config-subif)# pvc 20`<br>`RP/0/RSP0/CPU0:router (config-fr-vc)# commit` | **Note** When assigning an IP address and subnet mask to the subinterface at the other end of the connection, keep in mind that the addresses at both ends of the connection must be in the same subnet.<br>The DLCI (or PVC identifier) must match on both ends of the subinterface connection. |

### What to do next

- To configure optional PVC parameters, see the “Configuring Optional PVC Parameters” section on page 598.
- To modify the default Frame Relay configuration on POS interfaces that have Frame Relay encapsulation enabled, see the “Modifying the Default Frame Relay Configuration on an Interface” of the “Configuring Frame Relay on the Cisco ASR 9000 Series Router” module.
- To attach a Layer 3 QOS service policy to the PVC under the PVC submode, refer to the appropriate Cisco IOS XR software configuration guide.

# Configuring Optional PVC Parameters

This task describes the commands you can use to modify the default configuration on a POS PVC.

### Before you begin

Before you can modify the default PVC configuration, you must create the PVC on a POS subinterface, as described in the Creating a Point-to-Point POS Subinterface with a PVC.

**Restrictions**

- The DLCI (or PVC identifier) must match on both ends of the PVC for the connection to be active.
- To change the PVC DLCI, you must delete the PVC and then add it back with the new DLCI.

## SUMMARY STEPS

1. **configure**
2. **interface pos** *interface-path-id.subinterface*
3. **pvc** *dlci*
4. **encap** [**cisco** | **ietf**]
5. **service-policy** {**input** | **output**} *policy-map*
6. **end** or **commit**
7. Repeat Step 1 through Step 6 to bring up the POS subinterface and any associated PVC at the other end of the connection.
8. **show frame-relay pvc** *dlci-number*
9. **show policy-map interface pos** *interface-path-id.subinterface* {**input** | **output**} or **show policy-map type qos interface pos** *interface-path-id.subinterface* {**input** | **output**}

## DETAILED STEPS

| | Command or Action | Purpose |
|---|---|---|
| **Step 1** | **configure**<br>**Example:**<br>`RP/0/RSP0/CPU0:router# configure` | Enters global configuration mode. |
| **Step 2** | **interface pos** *interface-path-id.subinterface*<br>**Example:**<br>`RP/0/RSP0/CPU0:router (config)# interface pos 0/3/0/0.1` | Enters POS subinterface configuration mode. |
| **Step 3** | **pvc** *dlci*<br>**Example:**<br>`RP/0/RSP0/CPU0:router (config-subif)# pvc 20` | Enters subinterface configuration mode for the PVC.<br>Replace *dlci* with the DLCI number used to identify the PVC. Range is from 16 to 1007. |
| **Step 4** | **encap** [**cisco** | **ietf**]<br>**Example:** | (Optional) Configures the encapsulation for a Frame Relay PVC. |

| | Command or Action | Purpose |
|---|---|---|
| | `RP/0/RSP0/CPU0:router (config-fr-vc)# encap ietf` | **Note** • If the encapsulation type is not configured explicitly for a PVC, then that PVC inherits the encapsulation type from the main POS interface. |
| **Step 5** | **service-policy** {**input** \| **output**} *policy-map*<br>**Example:**<br>`RP/0/RSP0/CPU0:router (config-fr-vc)# service-policy output policy1` | Attaches a policy map to an input subinterface or output subinterface. Once attached, the policy map is used as the service policy for the subinterface.<br>**Note** • For information on creating and configuring policy maps, refer to the *Cisco IOS XR Modular Quality of Service Configuration Guide*, |
| **Step 6** | **end** or **commit**<br>**Example:**<br>`RP/0/RSP0/CPU0:router (config-fr-vc)# end`<br>or<br>`RP/0/RSP0/CPU0:router(config-fr-vc)# commit` | Saves configuration changes.<br>• When you issue the **end** command, the system prompts you to commit changes:<br>`Uncommitted changes found, commit them before exiting(yes/no/cancel)? [cancel]:`<br>- Entering **yes** saves configuration changes to the running configuration file, exits the configuration session, and returns the router to EXEC mode.<br>- Entering **no** exits the configuration session and returns the router to EXEC mode without committing the configuration changes.<br>- Entering **cancel** leaves the router in the current configuration session without exiting or committing the configuration changes.<br>• Use the **commit** command to save the configuration changes to the running configuration file and remain within the configuration session. |
| **Step 7** | Repeat Step 1 through Step 6 to bring up the POS subinterface and any associated PVC at the other end of the connection.<br>**Example:**<br>`RP/0/RSP0/CPU0:router# configure`<br>`RP/0/RSP0/CPU0:router (config)# interface pos 0/3/0/1.1`<br>`RP/0/RSP0/CPU0:router (config-subif)# pvc 20` | **Note** • The configuration on both ends of the subinterface connection must match. |

| | Command or Action | Purpose |
|---|---|---|
| | `RP/0/RSP0/CPU0:router (config-fr-vc)# encap cisco`<br>`RP/0/RSP0/CPU0:router (config-fr-vc)# commit` | |
| **Step 8** | **show frame-relay pvc** *dlci-number*<br>**Example:**<br>`RP/0/RSP0/CPU0:router# show frame-relay pvc 20` | (Optional) Verifies the configuration of specified POS interface. |
| **Step 9** | **show policy-map interface pos** *interface-path-id.subinterface* {**input** \| **output**} or **show policy-map type qos interface pos** *interface-path-id.subinterface* {**input** \| **output**}<br>**Example:**<br>`RP/0/RSP0/CPU0:router# show policy-map interface pos 0/3/0/0.1 output`<br>or<br>`RP/0/RSP0/CPU0:router# show policy-map type qos interface pos 0/3/0/0.1 output` | (Optional) Displays the statistics and the configurations of the input and output policies that are attached to a subinterface. |

### What to do next

To modify the default Frame Relay configuration on POS interfaces that have Frame Relay encapsulation enabled, see the “Modifying the Default Frame Relay Configuration on an Interface” of the “Configuring Frame Relay on the Cisco ASR 9000 Series Router” module.

# Modifying the Keepalive Interval on POS Interfaces

Perform this task to modify the keepalive interval on POS interfaces that have Cisco HDLC or PPP encapsulation enabled.

**Note** When you enable Cisco HDLC or PPP encapsulation on a POS interface, the default keepalive interval is 10 seconds. Use this procedure to modify that default keepalive interval.

Cisco HDLC is enabled by default on POS interfaces.

### Before you begin

Before you can modify the keepalive timer configuration, you must ensure that Cisco HDLC or PPP encapsulation is enabled on the interface. Use the **encapsulation** command to enable Cisco HDLC or PPP encapsulation on the interface, as described in the Configuring Optional POS Interface Parameters.

### Restrictions

During MDR, the keepalive interval must be 10 seconds or more.

## SUMMARY STEPS

1. **configure**
2. **interface pos** *interface-path-id*
3. **keepalive** {*seconds* [*retry-count*] | **disable**} or **no keepalive**
4. **end** or **commit**
5. **show interfaces pos** *interface-path-id*

## DETAILED STEPS

| | Command or Action | Purpose |
|---|---|---|
| **Step 1** | **configure**<br>**Example:**<br>`RP/0/RSP0/CPU0:router# configure` | Enters global configuration mode. |
| **Step 2** | **interface pos** *interface-path-id*<br>**Example:**<br>`RP/0/RSP0/CPU0:router(config)# interface POS 0/3/0/0` | Specifies the POS interface name and notation *rack/slot/module/port* and enters interface configuration mode. |
| **Step 3** | **keepalive** {*seconds* [*retry-count*] \| **disable**} or **no keepalive**<br>**Example:**<br>`RP/0/RSP0/CPU0:router(config-if)# keepalive 3`<br>or<br>`RP/0/RSP0/CPU0:router(config-if)# no keepalive` | Specifies the number of seconds between keepalive messages, and optionally the number of keepalive messages that can be sent to a peer without a response before transitioning the link to the down state.<br>• Use the **keepalive disable** command, the **no keepalive**, or the **keepalive** command with an argument of 0 to disable the keepalive feature entirely.<br>• If keepalives are configured on an interface, use the **no keepalive** command to disable the keepalive feature before you configure Frame Relay encapsulation on that interface. |
| **Step 4** | **end** or **commit**<br>**Example:**<br>`RP/0/RSP0/CPU0:router(config-if)# end`<br>or<br>`RP/0/RSP0/CPU0:router(config-if)# commit` | Saves configuration changes.<br>• When you issue the **end** command, the system prompts you to commit changes:<br>`Uncommitted changes found, commit them before exiting(yes/no/cancel)? [cancel]:`<br>- Entering **yes** saves configuration changes to the running configuration file, exits the configuration session, and returns the router to EXEC mode.<br>- Entering **no** exits the configuration session and returns the router to EXEC mode without committing the configuration changes. |

| | Command or Action | Purpose |
|---|---|---|
| | | - Entering **cancel** leaves the router in the current configuration session without exiting or committing the configuration changes.<br>• Use the **commit** command to save the configuration changes to the running configuration file and remain within the configuration session. |
| **Step 5** | **show interfaces pos** *interface-path-id*<br>**Example:**<br>`RP/0/RSP0/CPU0:router# show interfaces POS 0/3/0/0` | (Optional) Verifies the interface configuration. |

# How to Configure a Layer 2 Attachment Circuit

The Layer 2 AC configuration tasks are described in the following procedures:

**Note** After you configure an interface for Layer 2 switching, no routing commands such as **ipv4 address** are permissible.

Layer 2 ACs are not supported on interfaces configured with HDLC or PPP encapsulation.

## Creating a Layer 2 Frame Relay Subinterface with a PVC

The procedure in this section creates a Layer 2 Frame Relay subinterface with a PVC.

### Before you begin

Before you can create a subinterface on a POS interface, you must bring up a POS interface, as described in the Bringing Up a POS Interface.

**Note** You must skip Step 4 of the Bringing Up a POS Interface configuration steps when configuring an interface for Layer 2 switching. The **ipv4 address** command is not permissible on Frame Relay encapsulated interface.

**Restrictions**

- Only one PVC can be configured for each subinterface.
- The configuration on both ends of the PVC must match for the connection to operate properly.
- The **ipv4 address** command is not permissible on Frame Relay encapsulated interface. Any previous configuration of an IP address must be removed before you can configure an interface for Layer 2 transport mode.

- Layer 2 configuration is supported on Frame Relay PVCs only. Layer 2 Port mode, where Layer 2 configuration is applied directly under the main POS interface, is not supported.

## SUMMARY STEPS

1. **configure**
2. **interface pos** *interface-path-id.subinterface* **l2transport**
3. **pvc** dlci
4. **end** or **commit**
5. Repeat Step 1 through Step 4 to bring up the subinterface and any associated PVC at the other end of the AC.

## DETAILED STEPS

| | Command or Action | Purpose |
|---|---|---|
| **Step 1** | **configure**<br>**Example:**<br>`RP/0/RSP0/CPU0:router# configure` | Enters global configuration mode. |
| **Step 2** | **interface pos** *interface-path-id.subinterface* **l2transport**<br>**Example:**<br>`RP/0/RSP0/CPU0:router(config)# interface pos 0/3/0/0.1 l2transport` | Creates a subinterface and enters POS subinterface configuration mode for that subinterface.<br>**Note** • The *subinterface* must be unique to any other subinterfaces configured under a single main interface. |
| **Step 3** | **pvc** dlci<br>**Example:**<br>`RP/0/RSP0/CPU0:router(config-if)# pvc 100` | Creates a Frame Relay permanent virtual circuit (PVC) and enters Layer 2 transport PVC configuration mode.<br>Replace *dlci* with the DLCI number used to identify the PVC. Range is from 16 to 1007.<br>**Note** • Only one PVC is allowed per subinterface. |
| **Step 4** | **end** or **commit**<br>**Example:**<br>`RP/0/RSP0/CPU0:router(config-fr-vc)# end`<br>or<br>`RP/0/RSP0/CPU0:router(config-fr-vc)# commit` | Saves configuration changes.<br>• When you issue the **end** command, the system prompts you to commit changes:<br>`Uncommitted changes found, commit them before exiting(yes/no/cancel)? [cancel]:`<br>- Entering **yes** saves configuration changes to the running configuration file, exits the configuration session, and returns the router to EXEC mode.<br>- Entering **no** exits the configuration session and returns the router to EXEC mode without committing the configuration changes. |

| | Command or Action | Purpose |
|---|---|---|
| | | - Entering **cancel** leaves the router in the current configuration session without exiting or committing the configuration changes.<br>• Use the **commit** command to save the configuration changes to the running configuration file and remain within the configuration session. |
| **Step 5** | Repeat Step 1 through Step 4 to bring up the subinterface and any associated PVC at the other end of the AC. | Brings up the AC.<br>**Note** • The configuration on both ends of the AC must match. |

### What to do next

- To configure optional subinterface parameters, see the "Configuring Optional Layer 2 Subinterface Parameters" section on page 608.
- To configure optional PVC parameters, see the "Configuring Optional Layer 2 PVC Parameters" section on page 606.
- For more information about configuring Layer 2 services on the Cisco ASR 9000 Series Router, see the "Implementing Point to Point Layer 2 Services" module of the Cisco ASR 9000 Series Aggregation Services Router L2VPN and Ethernet Services Configuration Guide.

# Configuring Optional Layer 2 PVC Parameters

This task describes the commands you can use to modify the default configuration on a Frame Relay Layer 2 PVC.

### Before you begin

You must create the PVC on a Layer 2 subinterface, as described in the Creating a Layer 2 Frame Relay Subinterface with a PVC.

## SUMMARY STEPS

1. **configure**
2. **interface pos** *interface-path-id.subinterface* **l2transport**
3. **pvc** *dlci*
4. **encap** {**cisco** | **ietf**}
5. **service-policy** {**input** | **output**} *policy-map*
6. **end** or **commit**
7. Repeat Step 1 through Step 5 to configure the PVC at the other end of the AC.
8. **show policy-map interface pos** *interface-path-id.subinterface* {**input** | **output**} or **show policy-map type qos interface pos** *interface-path-id.subinterface* {**input** | **output**}

## DETAILED STEPS

| | Command or Action | Purpose |
|---|---|---|
| **Step 1** | **configure**<br>**Example:**<br>`RP/0/RSP0/CPU0:router# configure` | Enters global configuration mode. |
| **Step 2** | **interface pos** *interface-path-id.subinterface* **l2transport**<br>**Example:**<br>`RP/0/RSP0/CPU0:router(config)# interface pos 0/6/0/1.10 l2transport` | Enters POS subinterface configuration mode for a Layer 2 Frame Relay subinterface. |
| **Step 3** | **pvc** *dlci*<br>**Example:**<br>`RP/0/RSP0/CPU0:router(config-if)# pvc 100` | Enters Frame Relay PVC configuration mode for the specified PVC.<br>Replace *dlci* with the DLCI number used to identify the PVC. Range is from 16 to 1007. |
| **Step 4** | **encap** {**cisco** \| **ietf**}<br>**Example:**<br>`RP/0/RSP0/CPU0:router(config-fr-vc)# encap ietf` | Configures the encapsulation for a Frame Relay PVC.<br>The encapsulation type must match on both ends of the PVC. |
| **Step 5** | **service-policy** {**input** \| **output**} *policy-map*<br>**Example:**<br>`RP/0/RSP0/CPU0:router (config-fr-vc)# service-policy output policy1` | Attaches a policy map to an input subinterface or output subinterface. Once attached, the policy map is used as the service policy for the subinterface.<br>**Note** • For information on creating and configuring policy maps, refer to the *Cisco IOS XR Modular Quality of Service Configuration Guide*, |
| **Step 6** | **end** or **commit**<br>**Example:**<br>`RP/0/RSP0/CPU0:router(config-pos-l2transport-pvc)# end`<br>or<br>`RP/0/RSP0/CPU0:router(config-pos-l2transport-pvc)# commit` | Saves configuration changes.<br>• When you issue the **end** command, the system prompts you to commit changes:<br>`Uncommitted changes found, commit them before exiting(yes/no/cancel)? [cancel]:`<br>- Entering **yes** saves configuration changes to the running configuration file, exits the configuration session, and returns the router to EXEC mode.<br>- Entering **no** exits the configuration session and returns the router to EXEC mode without committing the configuration changes. |

| | Command or Action | Purpose |
|---|---|---|
| | | - Entering **cancel** leaves the router in the current configuration session without exiting or committing the configuration changes.<br>• Use the **commit** command to save the configuration changes to the running configuration file and remain within the configuration session.<br><br>Use the **commit** command to save the configuration changes to the running configuration file and remain within the configuration session. |
| **Step 7** | Repeat Step 1 through Step 5 to configure the PVC at the other end of the AC. | Brings up the AC.<br>**Note** • The configuration on both ends of the connection must match. |
| **Step 8** | **show policy-map interface pos** *interface-path-id.subinterface* {**input** \| **output**} or **show policy-map type qos interface pos** *interface-path-id.subinterface* {**input** \| **output**}<br>**Example:**<br>`RP/0/RSP0/CPU0:router# show policy-map interface pos 0/6/0/1.10 output`<br>or<br>`RP/0/RSP0/CPU0:router# show policy-map type qos interface pos 0/6/0/1.10 output` | (Optional) Displays the statistics and the configurations of the input and output policies that are attached to a subinterface. |

# Configuring Optional Layer 2 Subinterface Parameters

This task describes the commands you can use to modify the default configuration on a Frame Relay Layer 2 subinterface.

### Before you begin

Before you can modify the default PVC configuration, you must create the PVC on a Layer 2 subinterface, as described in the Creating a Layer 2 Frame Relay Subinterface with a PVC.

### Restrictions

In most cases, the MTU that is configured under the subinterface has priority over the MTU that is configured under the main interface. The exception to this rule is when the subinterface MTU is higher than main interface MTU. In such cases, the subinterface MTU displays the configured value in the CLI output, but the actual operational MTU is the value that is configured under the main interface value. To avoid confusion when troubleshooting and optimizing your Layer 2 connections, we recommend always configuring a higher MTU on main interface.

## SUMMARY STEPS

1. **configure**
2. **interface pos** *interface-path-id.subinterface*
3. **mtu** *value*
4. **end** or **commit**
5. Repeat Step 1 through Step 4 to configure the PVC at the other end of the AC.

## DETAILED STEPS

| | Command or Action | Purpose |
|---|---|---|
| **Step 1** | **configure**<br>**Example:**<br>`RP/0/RSP0/CPU0:router# configure` | Enters global configuration mode. |
| **Step 2** | **interface pos** *interface-path-id.subinterface*<br>**Example:**<br>`RP/0/RSP0/CPU0:router(config)# interface pos 0/3/0/1.1` | Enters POS subinterface configuration mode for a Layer 2 Frame Relay subinterface. |
| **Step 3** | **mtu** *value*<br>**Example:**<br>`RP/0/RSP0/CPU0:router(config-if)# mtu 5000` | (Optional) Configures the MTU value. Range is from 64 through 65535. |
| **Step 4** | **end** or **commit**<br>**Example:**<br>`RP/0/RSP0/CPU0:router(config-pos-l2transport-pvc)# end`<br>or<br>`RP/0/RSP0/CPU0:router(config-pos-l2transport-pvc)# commit` | Saves configuration changes.<br>• When you issue the **end** command, the system prompts you to commit changes:<br>`Uncommitted changes found, commit them before exiting(yes/no/cancel)? [cancel]:`<br>- Entering **yes** saves configuration changes to the running configuration file, exits the configuration session, and returns the router to EXEC mode.<br>- Entering **no** exits the configuration session and returns the router to EXEC mode without committing the configuration changes.<br>- Entering **cancel** leaves the router in the current configuration session without exiting or committing the configuration changes.<br>• Use the **commit** command to save the configuration changes to the running configuration file and remain within the configuration session. |

| | Command or Action | Purpose |
|---|---|---|
| | | Use the **commit** command to save the configuration changes to the running configuration file and remain within the configuration session. |
| **Step 5** | Repeat Step 1 through Step 4 to configure the PVC at the other end of the AC. | Brings up the AC.<br>**Note** • The configuration on both ends of the connection must match. |

# Configuration Examples for POS Interfaces

This section provides the following configuration examples:

## Bringing Up and Configuring a POS Interface with Cisco HDLC Encapsulation: Example

The following example shows how to bring up a basic POS interface with Cisco HDLC encapsulation:

```
RP/0/RSP0/CPU0:router# configure
RP/0/RSP0/CPU0:router(config)# interface POS 0/3/0/0
RP/0/RSP0/CPU0:router(config-if)# ipv4 address 172.18.189.38 255.255.255.224
RP/0/RSP0/CPU0:router(config-if)# no shutdown
RP/0/RSP0/CPU0:router(config-if)# end
Uncommitted changes found, commit them? [yes]: yes
```

The following example shows how to configure the interval between keepalive messages to be 10 seconds:

```
RP/0/RSP0/CPU0:router# configure
RP/0/RSP0/CPU0:router(config)# interface POS 0/3/0/0
RP/0/RSP0/CPU0:router(config-if)# keepalive 10
RP/0/RSP0/CPU0:router(config-if)# commit
```

## Configuring a POS Interface with Frame Relay Encapsulation: Example

The following example shows how to create a POS interface with Frame Relay encapsulation and a point-to-point POS subinterface with a PVC on router 1:

```
RP/0/RSP0/CPU0:router# configure
RP/0/RSP0/CPU0:router(config)# interface POS 0/3/0/0
RP/0/RSP0/CPU0:router(config-if)# encapsulation frame-relay
RP/0/RSP0/CPU0:router(config-if)# no shutdown
RP/0/RSP0/CPU0:router(config-if)# end
Uncommitted changes found, commit them? [yes]: yes

RP/0/RSP0/CPU0:router# configure
```

```
RP/0/RSP0/CPU0:router (config)# interface pos 0/3/0/0.1 point-to-point

RP/0/RSP0/CPU0:router (config-subif)#ipv4 address 10.20.3.1/24

RP/0/RSP0/CPU0:router (config-subif)# pvc 100

RP/0/RSP0/CPU0:router(config-if)# end
Uncommitted changes found, commit them? [yes]: yes
RP/0/RSP0/CPU0:router# show interface POS 0/3/0/0

Wed Oct  8 04:20:30.248 PST DST
POS0/3/0/0 is up, line protocol is up
  Interface state transitions: 1
  Hardware is Packet over SONET/SDH
  Internet address is 10.20.3.1/24
  MTU 4474 bytes, BW 155520 Kbit
     reliability 255/255, txload 0/255, rxload 0/255
  Encapsulation FRAME-RELAY, crc 32, controller loopback not set,
  LMI enq sent  116, LMI stat recvd 76, LMI upd recvd 0, DTE LMI up
  LMI enq recvd 0, LMI stat sent  0, LMI upd sent  0
  LMI DLCI 1023  LMI type is CISCO  frame relay DTE
  Last clearing of "show interface" counters 00:00:06
  5 minute input rate 0 bits/sec, 0 packets/sec
  5 minute output rate 0 bits/sec, 0 packets/sec
     1 packets input, 13 bytes, 0 total input drops
     0 drops for unrecognized upper-level protocol
     Received 0 runts, 0 giants, 0 throttles, 0 parity
     0 input errors, 0 CRC, 0 frame, 0 overrun, 0 ignored, 0 abort
     1 packets output, 13 bytes, 0 total output drops
     0 output errors, 0 underruns, 0 applique, 0 resets
     0 output buffer failures, 0 output buffers swapped out
```

The following example shows how to create a POS interface with Frame Relay encapsulation and a point-to-point POS subinterface with a PVC on router 2, which is connected to router 1:

```
RP/0/RSP0/CPU0:router# configure
RP/0/RSP0/CPU0:router(config)# interface POS 0/3/0/1
RP/0/RSP0/CPU0:router(config-if)# encapsulation frame-relay
RP/0/RSP0/CPU0:router(config-if)# frame-relay intf-type dce
RP/0/RSP0/CPU0:router(config-if)# no shutdown
RP/0/RSP0/CPU0:router(config-if)# end
Uncommitted changes found, commit them? [yes]: yes

RP/0/RSP0/CPU0:router# configure

RP/0/RSP0/CPU0:router (config)# interface pos 0/3/0/1.1 point-to-point

RP/0/RSP0/CPU0:router (config-subif)#ipv4 address 10.20.3.2/24

RP/0/RSP0/CPU0:router (config-subif)# pvc 100

RP/0/RSP0/CPU0:router(config-if)# end
Uncommitted changes found, commit them? [yes]: yes
```

```
RP/0/RSP0/CPU0:router# show interface POS 0/3/0/1

Wed Oct  8 04:20:38.037 PST DST
POS0/3/0/1 is up, line protocol is up
  Interface state transitions: 1
  Hardware is Packet over SONET/SDH
  Internet address is 10.20.3.2/24
  MTU 4474 bytes, BW 155520 Kbit
     reliability 255/255, txload 0/255, rxload 0/255
  Encapsulation FRAME-RELAY, crc 32, controller loopback not set,
  LMI enq sent  0, LMI stat recvd 0, LMI upd recvd 0
  LMI enq recvd 77, LMI stat sent  77, LMI upd sent  0 , DCE LMI up
  LMI DLCI 1023  LMI type is CISCO  frame relay DCE
  Last clearing of "show interface" counters 00:00:14
  5 minute input rate 0 bits/sec, 0 packets/sec
  5 minute output rate 0 bits/sec, 0 packets/sec
     2 packets input, 26 bytes, 0 total input drops
     0 drops for unrecognized upper-level protocol
     Received 0 runts, 0 giants, 0 throttles, 0 parity
     0 input errors, 0 CRC, 0 frame, 0 overrun, 0 ignored, 0 abort
     2 packets output, 26 bytes, 0 total output drops
     0 output errors, 0 underruns, 0 applique, 0 resets
     0 output buffer failures, 0 output buffers swapped out
```

The following example shows how create a Layer 2 POS subinterface with a PVC on the main POS interface:

```
RP/0/RSP0/CPU0:router# configure

RP/0/RSP0/CPU0:router (config)# interface pos 0/3/0/0.1 l2transport

RP/0/RSP0/CPU0:router (config-subif)# pvc 100

RP/0/RSP0/CPU0:router(config-subif)# commit
```

# Configuring a POS Interface with PPP Encapsulation: Example

The following example shows how to create and configure a POS interface with PPP encapsulation:

```
RP/0/RSP0/CPU0:router# configure
RP/0/RSP0/CPU0:router(config)# interface POS 0/3/0/0
RP/0/RSP0/CPU0:router(config-if)# ipv4 address 172.18.189.38 255.255.255.224
RP/0/RSP0/CPU0:router(config-if)# encapsulation ppp
RP/0/RSP0/CPU0:router(config-if)# no shutdown
RP/0/RSP0/CPU0:router(config-if)# end
Uncommitted changes found, commit them? [yes]: yes

RP/0/RSP0/CPU0:router# show interfaces POS 0/3/0/0

POS0/3/0/0 is down, line protocol is down
  Hardware is Packet over SONET
  Internet address is 172.18.189.38/27
  MTU 4474 bytes, BW 2488320 Kbit
     reliability 0/255, txload Unknown, rxload Unknown
  Encapsulation PPP, crc 32, controller loopback not set, keepalive set (
10 sec)
```

```
LCP Closed
Closed: IPCP
Last clearing of "show interface" counters never
5 minute input rate 0 bits/sec, 0 packets/sec
5 minute output rate 0 bits/sec, 0 packets/sec
   0 packets input, 0 bytes, 0 total input drops
   0 drops for unrecognized upper-level protocol
   Received 0 broadcast packets, 0 multicast packets
            0 runts, 0 giants, 0 throttles, 0 parity
   0 input errors, 0 CRC, 0 frame, 0 overrun, 0 ignored, 0 abort
   0 packets output, 0 bytes, 0 total output drops
   Output 0 broadcast packets, 0 multicast packets
   0 output errors, 0 underruns, 0 applique, 0 resets
   0 output buffer failures, 0 output buffers swapped out
   0 carrier transitions
```

CHAPTER 17

# Configuring Serial Interfaces

This module describes the configuration of serial interfaces.

### Feature History for Configuring Serial Controller Interfaces

| Release | Modification |
|---|---|
| Release 3.9.0 | Support for serial interfaces was added on the Cisco ASR 9000 Series Router for the 2-Port Channelized OC-12c/DS0 SPA. |
| Release 4.0.0 | Support for the following features and SPAs was added on the Cisco ASR 9000 Series Router:<br>• Support for IPv4 multicast was added for serial interfaces. For more information about multicast configuration on an interface, see the *Cisco ASR 9000 Series Aggregation Services Router Multicast Configuration Guide*.<br>• IPHC was added on the Cisco 2-Port Channelized OC-12c/DS0 SPA.<br>• Support for the Cisco 1-Port Channelized OC-48/STM-16 SPA was introduced. |
| Release 4.0.1 | Support for the following SPAs was added:<br>• Cisco 1-Port Channelized OC-3/STM-1 SPA<br>• Cisco 2-Port and 4-Port Clear Channel T3/E3 SPA |

| | |
|---|---|
| Release 4.1.0 | Support for the following SPAs was added:<br>• Cisco 4-Port Channelized T3/DS0 SPA<br>• Cisco 8-Port Channelized T1/E1 SPA<br>Support for IPHC was added on the following SPAs:<br>• Cisco 1-Port Channelized OC-3/STM-1 SPA<br>• Cisco 4-Port Channelized T3/DS0 SPA<br>• Cisco 8-Port Channelized T1/E1 SPA<br>• Cisco 2-Port and 4-Port Clear Channel T3/E3 SPA |

• Prerequisites for Configuring Serial Interfaces, on page 592
• Information About Configuring Serial Interfaces, on page 593
• How to Configure Serial Interfaces, on page 602
• Configuration Examples for Serial Interfaces, on page 619

# Prerequisites for Configuring Serial Interfaces

Before configuring serial interfaces, ensure that the following tasks and conditions are met:

- You must be in a user group associated with a task group that includes the proper task IDs. If you suspect user group assignment is preventing you from using a command, contact your AAA administrator for assistance.
- You should have the following SIP and any one of the following SPAs installed on the Cisco ASR 9000 Series Router:
  - Cisco SIP 700 SPA Interface Processor
  - Cisco 1-Port Channelized OC-3/STM-1 SPA
  - Cisco 2-Port Channelized OC-12c/DS0 SPA
  - Cisco 1-Port Channelized OC-48/STM-16 SPA
  - Cisco 2-Port or 4-Port Clear Channel T3/E3 SPA
  - Cisco 4-Port Channelized T3/DS0 SPA
  - Cisco 8-Port Channelized T1/E1 SPA

**Note** The Cisco 4-Port Channelized T3/DS0 SPA can run in clear channel mode, or it can be channelized into 28 T1 or 21 E1 controllers.

- You should have configured the clear channel T3/E3 controller or channelized T3 to T1/E1 controller that is associated with the serial interface you want to configure, as described in the *Configuring Clear Channel T3/E3 Controllers and Channelized T3 and T1/E1 Controllers* module in this manual.

**Note** On channelized T3 to T1/E1 controllers, serial interfaces are automatically created when users configure individual DS0 channel groups on the T1/E1 controllers.

# Information About Configuring Serial Interfaces

To configure serial interfaces, study the following concepts:

On the Cisco ASR 9000 Series Router, a single serial interface carries data over a single interface using PPP, Cisco HDLC, or Frame Relay encapsulation.

## High-Level Overview: Serial Interface Configuration on Channelized SPAs

provide a high-level overview of the tasks required to configure a T1 serial interface on the following SPAs and line cards.

- Cisco 2-Port Channelized OC-12c/DS0 SPA

***Table 22: Overview: Configuring a Serial Interface on a T1 DS0 Channel***

| Step | Task | Module | Section |
|---|---|---|---|
| 1. | Configure the SONET controller parameters and STS stream for T3 mode. | *Configuring Channelized SONET/SDH* | Configuring SONET T3 and VT1.5-Mapped T1 Channels, on page 403 |
| **2.** | Configure the T3 controller parameters and set the mode to T1.<br>28 T1 controllers are automatically created. | *Configuring Clear Channel T3/E3 Controllers and Channelized T3 and T1/E1 Controllers* | Configuring a Channelized T3 Controller, on page 513 |
| **3.** | Create and configure DS0 channel groups on the T1 controllers. | *Configuring Clear Channel T3/E3 Controllers and Channelized T3 and T1/E1 Controllers* | Configuring a T1 Controller, on page 518 |
| **4.** | Configure the Serial interfaces that are associated channel groups you created in Step 2. | *Configuring Serial Interfaces* | How to Configure Serial Interfaces, on page 602 |

provides a high-level overview of the tasks required to configure an E1 serial interface on the following SPAs and line cards.

- 1-Port Channelized OC-3/STM-1 SPA
- 2-Port Channelized OC-12c/DS0 SPA

***Table 23: Overview: Configuring a Serial Interface on a E1 DS0 Channel***

| Step | Task | Module | Section |
|---|---|---|---|
| 1. | Configure the SONET controller parameters and STS stream for T3 mode. | *Configuring Channelized SONET/SDH* | Configuring SONET T3 and VT1.5-Mapped T1 Channels, on page 403 |
| **2.** | Configure the T3 controller parameters and set the mode to E1.<br>21 E1 controllers are automatically created. | *Configuring Clear Channel T3/E3 Controllers and Channelized T3 and T1/E1 Controllers* | Configuring a Channelized T3 Controller, on page 513 |
| **3.** | Create and configure DS0 channel groups on the E1 controllers. | *Configuring Clear Channel T3/E3 Controllers and Channelized T3 and T1/E1 Controllers* | Configuring an E1 Controller, on page 521 |
| **4.** | Configure the Serial interfaces that are associated channel groups you created in Step 2. | *Configuring Serial Interfaces* | How to Configure Serial Interfaces, on page 602 |

This table provides a high-level overview of the tasks required to configure a T3 serial interface on the 1-Port Channelized OC-48/STM-16 SPA

***Table 24: Overview: Configuring a Serial Interface on a T3 Channel***

| Step | Task | Module | Section |
|---|---|---|---|
| **1.** | Configure the SONET controller parameters and STS stream. | *Configuring Channelized SONET/SDH* | Configuring a Clear Channel SONET Controller, on page 482 |
| **2.** | Configure the STS stream mode for T3 and configure the T3 controller parameters. | *Configuring Channelized SONET/SDH* | Configuring a Clear Channel SONET Controller for T3, on page 411 |
| **3.** | Configure the Serial interfaces. | *Configuring Serial Interfaces* | How to Configure Serial Interfaces, on page 602 |

# Cisco HDLC Encapsulation

*Cisco High-Level Data Link Controller* (HDLC) is the Cisco proprietary protocol for sending data over synchronous serial links using HDLC. Cisco HDLC also provides a simple control protocol called Serial Line Address Resolution Protocol (SLARP) to maintain serial link keepalives. HDLC is the default encapsulation type for serial interfaces under Cisco IOS XR software. Cisco HDLC is the default for data encapsulation at Layer 2 (data link) of the Open System Interconnection (OSI) stack for efficient packet delineation and error control.

**Note** Cisco HDLC is the default encapsulation type for the serial interfaces.

Cisco HDLC uses keepalives to monitor the link state, as described in the Keepalive Timer.

**Note** Use the **debug chdlc slarp packet** command to display information about the Serial Line Address Resolution Protocol (SLARP) packets that are sent to the peer after the keepalive timer has been configured.

# PPP Encapsulation

PPP is a standard protocol used to send data over synchronous serial links. PPP also provides a Link Control Protocol (LCP) for negotiating properties of the link. LCP uses echo requests and responses to monitor the continuing availability of the link.

**Note** When an interface is configured with PPP encapsulation, a link is declared down, and full LCP negotiation is re-initiated after five ECHOREQ packets are sent without receiving an ECHOREP response.

PPP provides the following Network Control Protocols (NCPs) for negotiating properties of data protocols that will run on the link:

- IP Control Protocol (IPCP) to negotiate IP properties
- Multiprotocol Label Switching control processor (MPLSCP) to negotiate MPLS properties
- Cisco Discovery Protocol control processor (CDPCP) to negotiate CDP properties
- IPv6CP to negotiate IP Version 6 (IPv6) properties
- Open Systems Interconnection control processor (OSICP) to negotiate OSI properties

PPP uses keepalives to monitor the link state, as described in the Keepalive Timer.

PPP supports the following authentication protocols, which require a remote device to prove its identity before allowing data traffic to flow over a connection:

- Challenge Handshake Authentication Protocol (CHAP)—CHAP authentication sends a challenge message to the remote device. The remote device encrypts the challenge value with a shared secret and returns the encrypted value and its name to the local router in a response message. The local router attempts to match the name of the remote device with an associated secret stored in the local username or remote

security server database; it uses the stored secret to encrypt the original challenge and verify that the encrypted values match.

- Microsoft Challenge Handshake Authentication Protocol (MS-CHAP)—MS-CHAP is the Microsoft version of CHAP. Like the standard version of CHAP, MS-CHAP is used for PPP authentication; in this case, authentication occurs between a personal computer using Microsoft Windows NT or Microsoft Windows 95 and a Cisco router or access server acting as a network access server.
- Password Authentication Protocol (PAP)—PAP authentication requires the remote device to send a name and a password, which are checked against a matching entry in the local username database or in the remote security server database.

**Note** For more information on enabling and configuring PPP authentication protocols, see the *Configuring PPP* module in this manual.

Use the **ppp authentication** command in interface configuration mode to enable CHAP, MS-CHAP, and PAP on a serial interface.

**Note** Enabling or disabling PPP authentication does not effect the local router's willingness to authenticate itself to the remote device.

## Multilink PPP

Multilink Point-to-Point Protocol (MLPPP) is supported on these SPAs:

- 1-Port Channelized OC-3/STM-1 SPA
- 2-Port Channelized OC-12/DS0 SPA

MLPPP provides a method for combining multiple physical links into one logical link. The implementation of MLPPP combines multiple PPP serial interfaces into one multilink interface. MLPPP performs the fragmenting, reassembling, and sequencing of datagrams across multiple PPP links.

MLPPP provides the same features that are supported on PPP Serial interfaces with the exception of QoS. It also provides the following additional features:

- Fragment sizes of 128, 256, and 512 bytes
- Long sequence numbers (24-bit)
- Lost fragment detection timeout period of 80 ms
- Minimum-active-links configuration option
- LCP echo request/reply support over multilink interface
- Full T1 and E1 framed and unframed links

For more information about configuring MLPPP on a serial interface, see the *Configuring PPP* module in this document.

# Keepalive Timer

Cisco keepalives are useful for monitoring the link state. Periodic keepalives are sent to and received from the peer at a frequency determined by the value of the keepalive timer. If an acceptable keepalive response is not received from the peer, the link makes the transition to the down state. As soon as an acceptable keepalive response is obtained from the peer or if keepalives are disabled, the link makes the transition to the up state.

**Note** The **keepalive** command applies to serial interfaces using HDLC or PPP encapsulation. It does not apply to serial interfaces using Frame Relay encapsulation.

For each encapsulation type, a certain number of keepalives ignored by a peer triggers the serial interface to transition to the down state. For HDLC encapsulation, three ignored keepalives causes the interface to be brought down. For PPP encapsulation, five ignored keepalives causes the interface to be brought down. ECHOREQ packets are sent out only when LCP negotiation is complete (for example, when LCP is open).

**Note** Use the **keepalive** command in interface configuration mode to set the frequency at which LCP sends ECHOREQ packets to its peer. To restore the system to the default keepalive interval of 10 seconds, use the **keepalive** command with **no** argument. To disable keepalives, use the **keepalive** disable command. For both PPP and Cisco HDLC, a keepalive of 0 disables keepalives and is reported in the **show running-config** command output as **keepalive disable**.

**Note** When LCP is running on the peer and receives an ECHOREQ packet, it responds with an echo reply (ECHOREP) packet, regardless of whether keepalives are enabled on the peer.

Keepalives are independent between the two peers. One peer end can have keepalives enabled; the other end can have them disabled. Even if keepalives are disabled locally, LCP still responds with ECHOREP packets to the ECHOREQ packets it receives. Similarly, LCP also works if the period of keepalives at each end is different.

**Note** Use the **debug chdlc slarp packet** command and other Cisco HDLC **debug** commands to display information about the Serial Line Address Resolution Protocol (SLARP) packets that are sent to the peer after the keepalive timer has been configured.

# Frame Relay Encapsulation

When Frame Relay encapsulation is enabled on a serial interface, the interface configuration is hierarchical and comprises the following elements:

1. The serial main interface comprises the physical interface and port. If you are not using the serial interface to support Cisco HDLC and PPP encapsulated connections, then you must configure subinterfaces with permanent virtual circuits (PVCs) under the serial main interface. Frame Relay connections are supported on PVCs only.

2. Serial subinterfaces are configured under the serial main interface. A serial subinterface does not actively carry traffic until you configure a PVC under the serial subinterface. Layer 3 configuration typically takes place on the subinterface.
3. Point-to-point PVCs are configured under a serial subinterface. You cannot configure a PVC directly under a main interface. A single point-to-point PVC is allowed per subinterface. PVCs use a predefined circuit path and fail if the path is interrupted. PVCs remain active until the circuit is removed from either configuration. Connections on the serial PVC support Frame Relay encapsulation only.

**Note** The administrative state of a parent interface drives the state of the subinterface and its PVC. When the administrative state of a parent interface or subinterface changes, so does the administrative state of any child PVC configured under that parent interface or subinterface.

To configure Frame Relay encapsulation on serial interfaces, use the **encapsulation frame-relay** command.

Frame Relay interfaces support two types of encapsulated frames:

- Cisco (default)
- IETF

Use the **encap** command in PVC configuration mode to configure Cisco or IETF encapsulation on a PVC. If the encapsulation type is not configured explicitly for a PVC, then that PVC inherits the encapsulation type from the main serial interface.

**Note** Cisco encapsulation is required on serial main interfaces that are configured for MPLS. IETF encapsulation is not supported for MPLS.

Before you configure Frame Relay encapsulation on an interface, you must verify that all prior Layer 3 configuration is removed from that interface. For example, you must ensure that there is no IP address configured directly under the main interface; otherwise, any Frame Relay configuration done under the main interface will not be viable.

## LMI on Frame Relay Interfaces

The Local Management Interface (LMI) protocol monitors the addition, deletion, and status of PVCs. LMI also verifies the integrity of the link that forms a Frame Relay UNI interface. By default, **cisco** LMI is enabled on all PVCs. However, you can modify the default LMI type to be ANSI or Q.933, as described in the Modifying the Default Frame Relay Configuration on an Interface, on page 636 section of the *Configuring Frame Relay*module in this manual.

If the LMI type is **cisco** (the default LMI type), the maximum number of PVCs that can be supported under a single interface is related to the MTU size of the main interface. Use the following formula to calculate the maximum number of PVCs supported on a card or SPA:

```
(MTU - 13)/8 = maximum number of PVCs
```

**Note** The default setting of the **mtu** command for a serial interface is 1504 bytes. Therefore, the default numbers of PVCs supported on a serial interface configured with **cisco** LMI is 186.

# Default Settings for Serial Interface Configurations

When an interface is enabled on a T3/E3 SPA, and no additional configuration commands are applied, the default interface settings shown in this table are present. These default settings can be changed by configuration.

***Table 25: Serial Interface Default Settings***

| Parameter | Configuration File Entry | Default Settings |
|---|---|---|
| Keepalive<br>**Note** The **keepalive** command applies to serial interfaces using HDLC or PPP encapsulation. It does not apply to serial interfaces using Frame Relay encapsulation. | **keepalive** [**disable**] **no keepalive** | keepalive 10 seconds |
| Encapsulation | **encapsulation** [**hdlc** \| **ppp** \| **frame-relay** [**ietf**]] | hdlc |
| Maximum transmission unit (MTU) | **mtu** *bytes* | 1504 bytes |
| Cyclic redundancy check (CRC) | **crc** [**16** \| **32]** | 16 |
| Data stream inversion on a serial interface | **invert** | Data stream is not inverted |
| Payload scrambling (encryption) | **scramble** | Scrambling is disabled. |
| Number of High-Level Data Link Control (HDLC) flag sequences to be inserted between the packets | **transmit-delay** | Default is 0 (disabled). |

**Note** Default settings do not appear in the output of the show running-config command.

# Serial Interface Naming Notation

The naming notation for T1, E1, and DS0 interfaces on a channelized SPA is *rack*/*slot*/*module*/*port*/*channel-num:channel-group-number*, as shown in the following example:

```
interface serial 0/0/1/2/4:3
```

If a subinterface and PVC are configured under the serial interface, then the router includes the subinterface number at the end of the serial interface address. In this case, the naming notation is *rack*/*slot*/*module*/*port*[/*channel-num:channel-group-number*].*subinterface,* as shown in the following examples:

```
interface serial 0/0/1/2.1
interface serial 0/0/1/2/4:3.1
```

**Note** A slash between values is required as part of the notation.

The naming notation syntax for serial interfaces is as follows:

- *rack*: Chassis number of the rack.
- *slot*: Physical slot number of the modular services card or line card.
- *module*: Module number. Shared port adapters (SPAs) are referenced by their subslot number.
- *port*: Physical port number of the controller.
- *channel-num*: T1 or E1 channel number. T1 channels range from 0 to 23; E1 channels range from 0 to 31.
- *channel-group-number*: Time slot number. T1 time slots range from 1 to 24; E1 time slots range from 1 to 31. The *channel-group-number* is preceded by a colon and not a slash.
- *subinterface*: Subinterface number.

Use the question mark (**?**) online help function following the **serial** keyword to view a list of all valid interface choices.

# IPHC Overview

IP header compression (IPHC) is based on the premise that most of the headers in the packets of a particular transmission remain constant throughout the flow. Only a few fields in the headers of related packets change during a flow.

IPHC compresses these headers so that the compressed header contains only the fields that change from packet to packet. All fields that remain the same from packet to packet are eliminated in the compressed headers. Full headers are sent between compressed headers.

Full headers are uncompressed headers that contain all the original header fields along with additional information (context ID) to identify the flow. The interval at which full headers are sent between compressed packets is configurable using the **refresh max-period** and **refresh max-time** commands.

IPHC contexts are used by the compressor (sender) and decompressor (receiver) of compressed packets to encode and decode the packets in a flow. A context is stored on the compressor and decompressor and is used in the delta calculation at both ends. The number of contexts allowed on a particular interface is configurable. The maximum size of the header that can be compressed is also configurable.

IPHC supports the compression and decompression of RTP and UDP traffic and the decompression of CN on TCP and CTCP traffic.

Users may choose one of the following types of compression formats:

- Internet Engineering Task Force (IETF) standard format. Uses RFC2507 and RFC2508 compression schemes.
- IPHC format. Provides options similar to IETF.

This table shows the IPHC features, the values of the features, and their defaults:

| IPHC Feature | Values | Defaults |
|---|---|---|
| TCP contexts | 0 to 255 | 1 |
| Non-TCP contexts | 1 to 6000 | 16 |
| Compression Format Options | IETF or IPHC | — |
| Feedback Messages | Enable or Disable | Enabled |
| Maximum Refresh Period Size | 1 to 65535 packets | 256 |
| Maximum Refresh Time Period | 0 to 255 seconds | 5 |
| Maximum Header Size | 20 to 40 bytes | 40 |
| Real Time Protocol (RTP) | Enable or Disable | Enabled |
| Refresh RTP | Enable or Disable | Disable |

Currently, only IPv4 unicast packets with UDP in the protocol field of the IP header are compressed.

IPHC is configured on an interface as follows:

- Create an IPHC profile
- Configure IPHC attributes in the profile
- Attach the profile to an interface

IPHC profiles must contain the **rtp** command to enable Real Time Protocol (RTP) on the interface, or the profile is not enabled. The **refresh rtp** command must be used to enable the configured refresh settings for RTP packets. By default, refresh RTP is disabled and only the first packet in the flow is sent as a 'full-header' packet.

If some attributes, such as feedback messages, maximum refresh period size, maximum refresh time period, and maximum header size, are not configured in the profile, the default values for those attributes apply when the profile is enabled on the interface.

Currently, IPHC is supported only on serial interfaces with PPP encapsulation and on multilink with PPP encapsulation interfaces.

IPHC is typically configured between the Customer Edge (CE) and Provide Edge (PE) ends of an interface and must be configured at both ends of the interface to work. The PPP protocol negotiates the IPHC specific parameters between the two ends of the interface and settles on the lowest value configured between the two ends.

## QoS and IPHC

An IPHC profile can be enabled on an interface so that the IPHC profile applies only to packets that match a Quality of Service (QoS) service policy. In this case, the QoS service-policy class attributes determine which packets are compressed. This allows users to fine tune IPHC with greater granularity.

Policy maps are attached to an interface using the **service-policy** command. IPHC action applies only to output service policies. IPHC is not supported on input service policies.

The user can configure IPHC using QoS as follows:

- Create a QoS **policy-map** with the **compress header ip** action.
- Attach the IPHC profile to the interface using the **ipv4 iphc profile** *profile_name* **mode service-policy** command.
- Attach the QoS **policy-map** with **compress header ip** action using the **service-policy output** command.

See IPHC on a Serial Interface with MLPPP/LFI and QoS Configuration: Example for an example of how to configure IPHC using QoS.

For complete information on configuring QoS, refer to the *Modular QoS Configuration Guide for Cisco ASR 9000 Series Routers*.

# How to Configure Serial Interfaces

After you have configured a channelized T3/E3 controller, as described in the *Configuring Clear Channel T3/E3 Controllers and Channelized T3 and T1/E1 Controllers* module in this document, you can configure the serial interfaces associated with that controller.

## Bringing Up a Serial Interface

This task describes the commands used to bring up a serial interface.

### Before you begin

- 
- The Cisco ASR 9000 Series Router must have the following SIP and at least one of the following SPAs installed and running Cisco IOS XR software:
- SIP 700 SPA Interface Processor
- 1-Port Channelized OC-3/STM-1 SPA
- 2-Port Channelized OC-12c/DS0 SPA
- 1-Port Channelized OC-48/STM-16 SPA
- 4-Port Channelized T3/DS0 SPA
- 2-Port and 4-Port Clear Channel T3/E3 SPA
- 8-Port Channelized T1/E1 SPA

### Restrictions

The configuration on both ends of the serial connection must match for the interface to be active.

## SUMMARY STEPS

1. **show interfaces**
2. **configure**
3. **interface serial** *interface-path-id*
4. **ipv4 address ip-address**
5. **no shutdown**
6. **end** or **commit**
7. **exit**
8. **exit**
9. Repeat Step 1 through Step 8 to bring up the interface at the other end of the connection.
10. **show ipv4 interface brief**
11. **show interfaces serial** *interface-path-id*

## DETAILED STEPS

| | Command or Action | Purpose |
|---|---|---|
| **Step 1** | **show interfaces**<br>**Example:**<br>`RP/0/RSP0/CPU0:router# show interfaces` | (Optional) Displays configured interfaces.<br>• Use this command to also confirm that the router recognizes the PLIM card. |
| **Step 2** | **configure**<br>**Example:**<br>`RP/0/RSP0/CPU0:router# configure` | Enters global configuration mode. |
| **Step 3** | **interface serial** *interface-path-id*<br>**Example:**<br>`RP/0/RSP0/CPU0:router(config)# interface serial 0/1/0/0` | Specifies the serial interface name and notation *rack/slot/module/port*, and enters interface configuration mode. |
| **Step 4** | **ipv4 address ip-address**<br>**Example:**<br>`RP/0/RSP0/CPU0:router(config-if)# ipv4 address 10.1.2.1 255.255.255.224` | Assigns an IP address and subnet mask to the interface.<br>**Note** • Skip this step if you are configuring Frame Relay encapsulation on this interface. For Frame Relay, the IP address and subnet mask are configured under the subinterface. |
| **Step 5** | **no shutdown**<br>**Example:** | Removes the shutdown configuration. |

| | Command or Action | Purpose |
|---|---|---|
| | `RP/0/RSP0/CPU0:router (config-if)# no shutdown` | **Note** • Removal of the shutdown configuration eliminates the forced administrative down on the interface, enabling it to move to an up or down state (assuming the parent SONET layer is not configured administratively down). |
| **Step 6** | **end** or **commit**<br>**Example:**<br>`RP/0/RSP0/CPU0:router (config-if)# end`<br>or<br>`RP/0/RSP0/CPU0:router(config-if)# commit` | Saves configuration changes.<br>• When you issue the **end** command, the system prompts you to commit changes:<br>`Uncommitted changes found, commit them before exiting(yes/no/cancel)? [cancel]:`<br>- Entering **yes** saves configuration changes to the running configuration file, exits the configuration session, and returns the router to EXEC mode.<br>- Entering **no** exits the configuration session and returns the router to EXEC mode without committing the configuration changes.<br>- Entering **cancel** leaves the router in the current configuration session without exiting or committing the configuration changes.<br>• Use the **commit** command to save the configuration changes to the running configuration file and remain within the configuration session. |
| **Step 7** | **exit**<br>**Example:**<br>`RP/0/RSP0/CPU0:router (config-if)# exit` | Exits interface configuration mode and enters global configuration mode. |
| **Step 8** | **exit**<br>**Example:**<br>`RP/0/RSP0/CPU0:router (config)# exit` | Exits global configuration mode and enters EXEC mode. |
| **Step 9** | Repeat Step 1 through Step 8 to bring up the interface at the other end of the connection.<br>**Example:**<br>`RP/0/RSP0/CPU0:router# show interfaces`<br>`RP/0/RSP0/CPU0:router# configure`<br>`RP/0/RSP0/CPU0:router (config)# interface serial 0/1/0/1` | **Note** • The configuration on both ends of the serial connection must match. |

| | Command or Action | Purpose |
|---|---|---|
| | `RP/0/RSP0/CPU0:router(config-if)# ipv4 address 10.1.2.2 255.255.255.224`<br>`RP/0/RSP0/CPU0:router (config-if)# no shutdown`<br>`RP/0/RSP0/CPU0:router (config-if)# commit`<br>`RP/0/RSP0/CPU0:router (config-if)# exit`<br>`RP/0/RSP0/CPU0:router (config)# exit` | |
| **Step 10** | **show ipv4 interface brief**<br>**Example:**<br>`RP/0/RSP0/CPU0:router # show ipv4 interface brief` | Verifies that the interface is active and properly configured.<br>If you have brought up a serial interface properly, the "Status" field for that interface in the **show ipv4 interface brief** command output displays "Up." |
| **Step 11** | **show interfaces serial** *interface-path-id*<br>**Example:**<br>`RP/0/RSP0/CPU0:router# show interfaces serial 0/1/0/0` | (Optional) Displays the interface configuration. |

### What to do next

To modify the default configuration of the serial interface you just brought up, see the "Configuring Optional Serial Interface Parameters" section on page 564.

# Configuring Optional Serial Interface Parameters

This task describes the commands used to modify the default configuration on a serial interface.

### Before you begin

Before you modify the default serial interface configuration, you must bring up the serial interface and remove the shutdown configuration, as described in the Bringing Up a Serial Interface.

### Restrictions

The configuration on both ends of the serial connection must match for the interface to be active.

## SUMMARY STEPS

1. **configure**
2. **interface serial** *interface-path-id*
3. **encapsulation** [**hdlc** | **ppp** | **frame-relay** [**IETF**]
4. **serial**
5. **crc** *length*
6. **invert**
7. **scramble**
8. **transmit-delay** *hdlc-flags*
9. **end** or **commit**
10. **exit**
11. **exit**

12. **exit**
13. **show interfaces serial** [*interface-path-id*]

## DETAILED STEPS

| | Command or Action | Purpose |
|---|---|---|
| **Step 1** | **configure**<br>**Example:**<br>`RP/0/RSP0/CPU0:router# configure` | Enters global configuration mode. |
| **Step 2** | **interface serial** *interface-path-id*<br>**Example:**<br>`RP/0/RSP0/CPU0:router(config)# interface serial 0/1/0/0` | Specifies the serial interface name and notation *rack/slot/module/port,* and enters interface configuration mode. |
| **Step 3** | **encapsulation** [**hdlc** \| **ppp** \| **frame-relay** [**IETF**]<br>**Example:**<br>`RP/0/RSP0/CPU0:router(config-if)# encapsulation hdlc` | (Optional) Configures the interface encapsulation parameters and details such as HDLC, PPP or Frame Relay.<br>**Note** • The default encapsulation is **hdlc**. |
| **Step 4** | **serial**<br>**Example:**<br>`RP/0/RSP0/CPU0:router(config-if)# serial` | (Optional) Enters serial submode to configure the serial parameters. |
| **Step 5** | **crc** *length*<br>**Example:**<br>`RP/0/RSP0/CPU0:ios(config-if-serial)# crc 32` | (Optional) Specifies the length of the cyclic redundancy check (CRC) for the interface. Enter the **16** keyword to specify 16-bit CRC mode, or enter the **32** keyword to specify 32-bit CRC mode.<br>**Note** • The default is CRC length is 16. |
| **Step 6** | **invert**<br>**Example:**<br>`RP/0/RSP0/CPU0:ios(config-if-serial)# inverts` | (Optional) Inverts the data stream. |
| **Step 7** | **scramble**<br>**Example:**<br>`RP/0/RSP0/CPU0:ios(config-if-serial)# scramble` | (Optional) Enables payload scrambling on the interface.<br>**Note** • Payload scrambling is disabled on the interface. |
| **Step 8** | **transmit-delay** *hdlc-flags*<br>**Example:** | (Optional) Specifies a transmit delay on the interface. Values can be from 0 to 128.<br>**Note** • Transmit delay is disabled by default (the transmit delay is set to **0**). |

| | Command or Action | Purpose |
|---|---|---|
| | `RP/0/RSP0/CPU0:ios(config-if-serial)# transmit-delay 10` | |
| **Step 9** | **end** or **commit**<br>**Example:**<br>`RP/0/RSP0/CPU0:router (config-if)# end`<br>or<br>`RP/0/RSP0/CPU0:router(config-if)# commit` | Saves configuration changes.<br>• When you issue the **end** command, the system prompts you to commit changes:<br>`Uncommitted changes found, commit them before exiting(yes/no/cancel)? [cancel]:`<br>- Entering **yes** saves configuration changes to the running configuration file, exits the configuration session, and returns the router to EXEC mode.<br>- Entering **no** exits the configuration session and returns the router to EXEC mode without committing the configuration changes.<br>- Entering **cancel** leaves the router in the current configuration session without exiting or committing the configuration changes.<br>• Use the **commit** command to save the configuration changes to the running configuration file and remain within the configuration session. |
| **Step 10** | **exit**<br>**Example:**<br>`RP/0/RSP0/CPU0:router(config-if-serial)# exit` | Exits serial configuration mode. |
| **Step 11** | **exit**<br>**Example:**<br>`RP/0/RSP0/CPU0:router (config-if)# exit` | Exits interface configuration mode and enters global configuration mode. |
| **Step 12** | **exit**<br>**Example:**<br>`RP/0/RSP0/CPU0:router (config)# exit` | Exits global configuration mode and enters EXEC mode. |
| **Step 13** | **show interfaces serial** [*interface-path-id*]<br>**Example:**<br>`RP/0/RSP0/CPU0:router# show interface serial 0/1/0/0` | (Optional) Displays general information for the specified serial interface. |

### What to do next

- To create a point-to-point Frame Relay subinterface with a PVC on the serial interface you just brought up, see the "Creating a Point-to-Point Serial Subinterface with a PVC" section on page 567.
- To configure PPP authentication on serial interfaces with PPP encapsulation, see the "Configuring PPP on the Cisco ASR 9000 Series Router" module later in this manual.
- To modify the default keepalive configuration, see the "Modifying the Keepalive Interval on Serial Interfaces" section on page 572.
- To modify the default Frame Relay configuration on serial interfaces that have Frame Relay encapsulation enabled, see the "Modifying the Default Frame Relay Configuration on an Interface" section of the "Configuring Frame Relay on the Cisco ASR 9000 Series Router" module.

# Creating a Point-to-Point Serial Subinterface with a PVC

The procedure in this section creates a point-to-point serial subinterface and configures a permanent virtual circuit (PVC) on that serial subinterface.

**Note** Subinterface and PVC creation is supported on interfaces with Frame Relay encapsulation only.

### Before you begin

Before you can create a subinterface on a serial interface, you must bring up the main serial interface with Frame Relay encapsulation, as described in the Bringing Up a Serial Interface.

**Restrictions**

Only one PVC can be configured for each point-to-point serial subinterface.

## SUMMARY STEPS

1. **configure**
2. **interface serial** *interface-path-id.subinterface* **point-to-point**
3. **ipv4 address** *ipv4_address/prefix*
4. **pvc** *dlci*
5. **end** or **commit**
6. Repeat Step 1 through Step 5 to bring up the serial subinterface and any associated PVC at the other end of the connection.

## DETAILED STEPS

| | Command or Action | Purpose |
|---|---|---|
| **Step 1** | **configure**<br>**Example:**<br>`RP/0/RSP0/CPU0:router# configure` | Enters global configuration mode. |

| | Command or Action | Purpose |
|---|---|---|
| **Step 2** | **interface serial** *interface-path-id.subinterface* **point-to-point**<br>**Example:**<br>`RP/0/RSP0/CPU0:router (config)# interface serial 0/1/0/0.1` | Enters serial subinterface configuration mode. |
| **Step 3** | **ipv4 address** *ipv4_address/prefix*<br>**Example:**<br>`RP/0/RSP0/CPU0:router (config-subif)#ipv4 address 10.46.8.6/24` | Assigns an IP address and subnet mask to the subinterface. |
| **Step 4** | **pvc** *dlci*<br>**Example:**<br>`RP/0/RSP0/CPU0:router (config-subif)# pvc 20` | Creates a serial permanent virtual circuit (PVC) and enters Frame Relay PVC configuration submode.<br>Replace *dlci* with a PVC identifier, in the range from 16 to 1007.<br>**Note** • Only one PVC is allowed per subinterface. |
| **Step 5** | **end** or **commit**<br>**Example:**<br>`RP/0/RSP0/CPU0:router (config-subif)# end`<br>or<br>`RP/0/RSP0/CPU0:router(config-subif)# commit` | Saves configuration changes.<br>• When you issue the **end** command, the system prompts you to commit changes:<br>`Uncommitted changes found, commit them before exiting(yes/no/cancel)? [cancel]:`<br>- Entering **yes** saves configuration changes to the running configuration file, exits the configuration session, and returns the router to EXEC mode.<br>- Entering **no** exits the configuration session and returns the router to EXEC mode without committing the configuration changes.<br>- Entering **cancel** leaves the router in the current configuration session without exiting or committing the configuration changes.<br>• Use the **commit** command to save the configuration changes to the running configuration file and remain within the configuration session. |

| | Command or Action | Purpose |
|---|---|---|
| **Step 6** | Repeat Step 1 through Step 5 to bring up the serial subinterface and any associated PVC at the other end of the connection.<br>**Example:**<br>`RP/0/RSP0/CPU0:router# configure`<br>`RP/0/RSP0/CPU0:router (config)# interface serial 0/1/0/1.1`<br>`RP/0/RSP0/CPU0:router (config-subif)#ipv4 address 10.46.8.5/24`<br>`RP/0/RSP0/CPU0:router (config-subif)# pvc 20`<br>`RP/0/RSP0/CPU0:router (config-fr-vc)# commit` | **Note** • The DLCI (or PVC identifier) must match on both ends of the subinterface connection.<br>• When assigning an IP address and subnet mask to the subinterface at the other end of the connection, keep in mind that the addresses at both ends of the connection must be in the same subnet. |

### What to do next

- To configure optional PVC parameters, see the "Configuring Optional Serial Interface Parameters" section on page 564.
- To modify the default Frame Relay configuration on serial interfaces that have Frame Relay encapsulation enabled, see the"Modifying the Default Frame Relay Configuration on an Interface" section of the "Configuring Frame Relay on the Cisco ASR 9000 Series Router" module.
- To attach a Layer 3 QOS service policy to the PVC under the PVC submode, refer to the appropriate Cisco IOS XR software configuration guide.

# Configuring Optional PVC Parameters

This task describes the commands you can use to modify the default configuration on a serial PVC.

For additional information about Frame Relay options, see the "Configuring Frame Relay on the Cisco ASR 9000 Series Router" module in the *Cisco IOS XR Interface and Hardware Component Configuration Guide for the Cisco ASR 9000 Series Router.*

### Before you begin

Before you can modify the default PVC configuration, you must create the PVC on a serial subinterface, as described in the Creating a Point-to-Point Serial Subinterface with a PVC.

### Restrictions

- The DLCI (or PVI identifier) must match on both ends of the PVC for the connection to be active.
- To change the PVC DLCI, you must delete the PVC and then add it back with the new DLCI.

## SUMMARY STEPS

1. Configuring Optional PVC Parameters
2. **interface serial** *interface-path-id.subinterface*
3. **pvc** *dlci*

4. **encap** [**cisco** | **ietf**]
5. **service-policy** {**input** | **output**} *policy-map*
6. **end** or **commit**
7. Repeat Step 1 through Step 6 to bring up the serial subinterface and any associated PVC at the other end of the connection.
8. **show frame-relay pvc** *dlci-number*
9. **show policy-map interface serial** *interface-path-id.subinterface* {**input** | **output**} or **show policy-map type qos interface serial** *interface-path-id.subinterface* {**input** | **output**}

## DETAILED STEPS

| | Command or Action | Purpose |
|---|---|---|
| **Step 1** | Configuring Optional PVC Parameters<br>**Example:**<br>`RP/0/RSP0/CPU0:router# configure` | Enters global configuration mode. |
| **Step 2** | **interface serial** *interface-path-id.subinterface*<br>**Example:**<br>`RP/0/RSP0/CPU0:router (config)# interface serial 0/1/0/0.1` | Enters serial subinterface configuration mode. |
| **Step 3** | **pvc** *dlci*<br>**Example:**<br>`RP/0/RSP0/CPU0:router (config-subif)# pvc 20` | Enters subinterface configuration mode for the PVC. |
| **Step 4** | **encap** [**cisco** | **ietf**]<br>**Example:**<br>`RP/0/RSP0/CPU0:router (config-fr-vc)# encap ietf` | (Optional) Configures the encapsulation for a Frame Relay PVC.<br>**Note** • If the encapsulation type is not configured explicitly for a PVC, then that PVC inherits the encapsulation type from the main serial interface. |
| **Step 5** | **service-policy** {**input** | **output**} *policy-map*<br>**Example:**<br>`RP/0/RSP0/CPU0:router (config-fr-vc)# service-policy output policy1` | Attaches a policy map to an input subinterface or output subinterface. Once attached, the policy map is used as the service policy for the subinterface. |
| **Step 6** | **end** or **commit**<br>**Example:**<br>`RP/0/RSP0/CPU0:router (config-fr-vc)# end`<br>or | Saves configuration changes.<br>• When you issue the **end** command, the system prompts you to commit changes:<br>`Uncommitted changes found, commit them before exiting(yes/no/cancel)? [cancel]:` |

| | Command or Action | Purpose |
|---|---|---|
| | `RP/0/RSP0/CPU0:router(config-fr-vc)# commit` | - Entering **yes** saves configuration changes to the running configuration file, exits the configuration session, and returns the router to EXEC mode.<br>- Entering **no** exits the configuration session and returns the router to EXEC mode without committing the configuration changes.<br>- Entering **cancel** leaves the router in the current configuration session without exiting or committing the configuration changes.<br>• Use the **commit** command to save the configuration changes to the running configuration file and remain within the configuration session. |
| **Step 7** | Repeat Step 1 through Step 6 to bring up the serial subinterface and any associated PVC at the other end of the connection.<br>**Example:**<br>`RP/0/RSP0/CPU0:router# configure`<br>`RP/0/RSP0/CPU0:router (config)# interface serial 0/1/0/1.1`<br>`RP/0/RSP0/CPU0:router (config-subif)# pvc 20`<br>`RP/0/RSP0/CPU0:router (config-fr-vc)# encap cisco`<br>`RP/0/RSP0/CPU0:router (config-fr-vc)# commit` | **Note** • The configuration on both ends of the subinterface connection must match. |
| **Step 8** | **show frame-relay pvc** *dlci-number*<br>**Example:**<br>`RP/0/RSP0/CPU0:router# show frame-relay pvc 20` | (Optional) Verifies the configuration of specified serial interface. |
| **Step 9** | **show policy-map interface serial** *interface-path-id.subinterface* {**input** \| **output**} or **show policy-map type qos interface serial** *interface-path-id.subinterface* {**input** \| **output**}<br>**Example:**<br>`RP/0/RSP0/CPU0:router# show policy-map interface serial 0/1/0/0.1 output`<br>or<br>`RP/0/RSP0/CPU0:router# show policy-map type qos interface serial 0/1/0/0.1 output` | (Optional) Displays the statistics and the configurations of the input and output policies that are attached to a subinterface. |

### What to do next

To modify the default Frame Relay configuration on serial interfaces that have Frame Relay encapsulation enabled, see the "Modifying the Default Frame Relay Configuration on an Interface" section of the "Configuring Frame Relay on the Cisco ASR 9000 Series Router" module in this manual.

# Modifying the Keepalive Interval on Serial Interfaces

Perform this task to modify the keepalive interval on serial interfaces that have Cisco HDLC or PPP encapsulation enabled.

**Note** When you enable Cisco HDLC or PPP encapsulation on a serial interface, the default keepalive interval is 10 seconds. Use this procedure to modify that default keepalive interval.

Cisco HDLC is enabled by default on serial interfaces.

### Before you begin

Before modifying the keepalive timer configuration, ensure that Cisco HDLC or PPP encapsulation is enabled on the interface. Use the **encapsulation** command to enable Cisco HDLC or PPP encapsulation on the interface, as described in the Configuring Optional Serial Interface Parameters.

**Restrictions**

## SUMMARY STEPS

1. **configure**
2. **interface serial** *interface-path-id*
3. **keepalive** {*seconds* | **disable**} or **no keepalive**
4. **end** or **commit**
5. **show interfaces serial** *interface-path-id*

## DETAILED STEPS

| | Command or Action | Purpose |
|---|---|---|
| **Step 1** | **configure**<br>**Example:**<br>`RP/0/RSP0/CPU0:router# configure` | Enters global configuration mode. |
| **Step 2** | **interface serial** *interface-path-id*<br>**Example:**<br>`RP/0/RSP0/CPU0:router(config)# interface serial 0/1/0/0` | Specifies the serial interface name and notation *rack/slot/module/port* and enters interface configuration mode. |
| **Step 3** | **keepalive** {*seconds* \| **disable**} or **no keepalive**<br>**Example:** | Specifies the number of seconds between keepalive messages. |

| | Command or Action | Purpose |
|---|---|---|
| | `RP/0/RSP0/CPU0:router(config-if)# keepalive 3`<br>or<br>`RP/0/RSP0/CPU0:router(config-if)# no keepalive` | • Use the **keepalive disable** command, the **no keepalive**, or the **keepalive** command with an argument of 0 to disable the keepalive feature.<br>• The range is from 1 to 30 seconds. The default is 10 seconds.<br>• If keepalives are configured on an interface, use the **no keepalive** command to disable the keepalive feature before configuring Frame Relay encapsulation on that interface. |
| **Step 4** | **end** or **commit**<br>**Example:**<br>`RP/0/RSP0/CPU0:router(config-if)# end`<br>or<br>`RP/0/RSP0/CPU0:router(config-if)# commit` | Saves configuration changes.<br>• When you issue the **end** command, the system prompts you to commit changes:<br>`Uncommitted changes found, commit them before exiting(yes/no/cancel)? [cancel]:`<br>- Entering **yes** saves configuration changes to the running configuration file, exits the configuration session, and returns the router to EXEC mode.<br>- Entering **no** exits the configuration session and returns the router to EXEC mode without committing the configuration changes.<br>- Entering **cancel** leaves the router in the current configuration session without exiting or committing the configuration changes.<br>• Use the **commit** command to save the configuration changes to the running configuration file and remain within the configuration session. |
| **Step 5** | **show interfaces serial** *interface-path-id*<br>**Example:**<br>`RP/0/RSP0/CPU0:router# show interfaces serial 0/1/0/0` | (Optional) Verifies the interface configuration. |

# Configuring IPHC

This section contains the following step procedures:

## Prerequisites for Configuring IPHC

IP header compression (IPHC) is supported on the following cards:

- SIP 700 SPA Interface Processor

- Cisco 2-Port Channelized OC-12c/DS0 SPA
- Cisco 1-Port Channelized OC-3/STM-1 SPA
- Cisco 4-Port Channelized T3/DS0 SPA
- Cisco 8-Port Channelized T1/E1 SPA
- Cisco 2-Port and 4-Port Clear Channel T3/E3 SPA

## Configuring an IPHC Profile

This section describes how to create and configure an IP header compression (IPHC) profile. This procedure is for TCP and non-TCP compression.

### SUMMARY STEPS

1. **configure**
2. **iphc profile** *profile-name* **type** {**cisco** | **ietf** | **iphc**}
3. **tcp compression**
4. **tcp context absolute** *number-of-contexts*
5. **non-tcp compression**
6. **non-tcp context absolute** *number-of-contexts*
7. **rtp**
8. **refresh max-period** {*max-number* | **infinite**}
9. **refresh max-time** {*max-time* | **infinite**}
10. **refresh rtp**
11. **feedback disable**
12. **max-header** *number-of-bytes*
13. **end** or **commit**

### DETAILED STEPS

| | Command or Action | Purpose |
|---|---|---|
| **Step 1** | **configure**<br>**Example:**<br>`RP/0/RSP0/CPU0:router# configure` | Enters global configuration mode. |
| **Step 2** | **iphc profile** *profile-name* **type** {**cisco** \| **ietf** \| **iphc**}<br>**Example:**<br>`RP/0/RSP0/CPU0:router(config)# iphc profile Profile_1 type iphc` | Creates an IPHC profile, sets the compression format type, and enters the IPHC profile configuration mode. |
| **Step 3** | **tcp compression**<br>**Example:**<br>`RP/0/RSP0/CPU0:router(config-iphc-profile)# tcp compression` | Enables TCP compression in an IPHC profile. |

| | Command or Action | Purpose |
|---|---|---|
| **Step 4** | **tcp context absolute** *number-of-contexts*<br>**Example:**<br>`RP/0/RSP0/CPU0:router(config-iphc-profile)# tcp context absolute 255` | Configures the maximum number of TCP contexts that are allowed for IPHC on a line card. |
| **Step 5** | **non-tcp compression**<br>**Example:**<br>`RP/0/RSP0/CPU0:router(config-iphc-profile)# non-tcp compression` | Enables non-TCP compression in an IPHC profile. |
| **Step 6** | **non-tcp context absolute** *number-of-contexts*<br>**Example:**<br>`RP/0/RSP0/CPU0:router(config-iphc-profile)# non-tcp context absolute 255` | Configures the maximum number of non-TCP contexts that are allowed for IPHC on a line card. |
| **Step 7** | **rtp**<br>**Example:**<br>`RP/0/RSP0/CPU0:router(config-iphc-profile)# rtp` | Configures Real Time Protocol (RTP) on the interface. |
| **Step 8** | **refresh max-period** {*max-number* \| **infinite**}<br>**Example:**<br>`RP/0/RSP0/CPU0:router(config-iphc-profile)# refresh max-period 50` | Configures the maximum number of compressed IP header packets that are exchanged on a link before the IPHC context is refreshed. |
| **Step 9** | **refresh max-time** {*max-time* \| **infinite**}<br>**Example:**<br>`RP/0/RSP0/CPU0:router(config-iphc-profile)# refresh max-time 10` | Configures the maximum time between context refreshes. |
| **Step 10** | **refresh rtp**<br>**Example:**<br>`RP/0/RSP0/CPU0:router(config-iphc-profile)# refresh rtp` | Enables the configured context refresh settings for RTP packets. |
| **Step 11** | **feedback disable**<br>**Example:**<br>`RP/0/RSP0/CPU0:router(config-iphc-profile)# feedback disable` | Disables the IPHC context status feedback messages on an interface. |
| **Step 12** | **max-header** *number-of-bytes*<br>**Example:** | Configures the maximum size (in bytes) of a compressed IP header. |

| | Command or Action | Purpose |
|---|---|---|
| | `RP/0/RSP0/CPU0:router(config-iphc-profile)# max-header 20` | |
| **Step 13** | **end** or **commit**<br>**Example:**<br>`RP/0/RSP0/CPU0:router(config-if)# end`<br>or<br>`RP/0/RSP0/CPU0:router(config-if)# commit` | Saves configuration changes.<br>• When you issue the **end** command, the system prompts you to commit changes:<br>`Uncommitted changes found, commit them before exiting(yes/no/cancel)? [cancel]:`<br>- Entering **yes** saves configuration changes to the running configuration file, exits the configuration session, and returns the router to EXEC mode.<br>- Entering **no** exits the configuration session and returns the router to EXEC mode without committing the configuration changes.<br>- Entering **cancel** leaves the router in the current configuration session without exiting or committing the configuration changes.<br>• Use the **commit** command to save the configuration changes to the running configuration file and remain within the configuration session. |

## Enabling an IPHC Profile on an Interface

This section describes how to enable an IP header compression (IPHC) profile on an interface by attaching the profile directly to the interface.

### SUMMARY STEPS

1. **configure**
2. **interface type** *interface-path-id*
3. **encapsulation** {**hdlc** | **ppp** | **frame-relay** | **mfr**}
4. **ipv4 iphc profile** *profile-name* [**mode service-policy**]
5. **service policy output** *service-policy-name*
6. **end** or **commit**

### DETAILED STEPS

| | Command or Action | Purpose |
|---|---|---|
| **Step 1** | **configure**<br>**Example:**<br>`RP/0/RSP0/CPU0:router# configure` | Enters global configuration mode. |

| | Command or Action | Purpose |
|---|---|---|
| **Step 2** | **interface type** *interface-path-id*<br>**Example:**<br>`RP/0/RSP0/CPU0:router(config)# interface serial 0/1/0/1` | Specifies the interface.<br>**Note** • Use the **show interfaces** command to see a list of all interfaces currently configured on the router.<br>For more information about the syntax for the router, use the question mark (**?**) online help function. |
| **Step 3** | **encapsulation** {**hdlc** \| **ppp** \| **frame-relay** \| **mfr**}<br>**Example:**<br>`RP/0/RSP0/CPU0:router(config-if)# encapsulation ppp` | Specifies Layer 2 encapsulation for the interface. |
| **Step 4** | **ipv4 iphc profile** *profile-name* [**mode service-policy**]<br>**Example:**<br>`RP/0/RSP0/CPU0:router(config-if)# ipv4 iphc profile Profile_1`<br>or<br>`RP/0/RSP0/CPU0:router(config-if)# ipv4 iphc profile Profile_1 mode service-policy` | Attaches an IPHC profile to the interface:<br>• *profile-name*—Text name of the IPHC profile to attach to the interface.<br>• **mode service-policy**—Specifies that the IPHC profile applies only to a QoS service policy. |
| **Step 5** | **service policy output** *service-policy-name*<br>**Example:**<br>`RP/0/RSP0/CPU0:router(config-if)# service policy input \| output \| type service-policy-name` | (Optional) Specifies the name of the QoS service policy to which the IPHC profile applies. Only output service policies are allowed.<br>Used only when **mode service-policy** is specified in *Configuring an IPHC Profile* procedure. |
| **Step 6** | **end** or **commit**<br>**Example:**<br>`RP/0/RSP0/CPU0:router(config-if)# end`<br>or<br>`RP/0/RSP0/CPU0:router(config-if)# commit` | Saves configuration changes.<br>• When you issue the **end** command, the system prompts you to commit changes:<br>`Uncommitted changes found, commit them before exiting(yes/no/cancel)? [cancel]:`<br>- Entering **yes** saves configuration changes to the running configuration file, exits the configuration session, and returns the router to EXEC mode.<br>- Entering **no** exits the configuration session and returns the router to EXEC mode without committing the configuration changes.<br>- Entering **cancel** leaves the router in the current configuration session without exiting or committing the configuration changes. |

| | Command or Action | Purpose |
|---|---|---|
| | | • Use the **commit** command to save the configuration changes to the running configuration file and remain within the configuration session. |

# Configuration Examples for Serial Interfaces

This section provides the following configuration examples:

## Bringing Up and Configuring a Serial Interface with Cisco HDLC Encapsulation: Example

The following example shows how to bring up a basic serial interface with Cisco HDLC encapsulation:

```
RP/0/RSP0/CPU0:Router#config
RP/0/RSP0/CPU0:Router(config)# interface serial 0/3/0/0/0:0
RP/0/RSP0/CPU0:Router(config-if)# ipv4 address 192.0.2.2 255.255.255.252
RP/0/RSP0/CPU0:Router(config-if)# no shutdown
RP/0/RSP0/CPU0:router(config-if)# end
Uncommitted changes found, commit them? [yes]: yes
```

The following example shows how to configure the interval between keepalive messages to be 10 seconds:

```
RP/0/RSP0/CPU0:router# configure
RP/0/RSP0/CPU0:router(config)# interface serial 0/3/0/0/0:0
RP/0/RSP0/CPU0:router(config-if)# keepalive 10
RP/0/RSP0/CPU0:router(config-if)# commit
```

The following example shows how to modify the optional serial interface parameters:

```
RP/0/RSP0/CPU0:router# configure
RP/0/RSP0/CPU0:router(config)# interface serial 0/3/0/0/0:0
RP/0/RSP0/CPU0:Router(config-if)# serial
RP/0/RSP0/CPU0:Router(config-if-serial)# crc 16
RP/0/RSP0/CPU0:Router(config-if-serial)# invert
RP/0/RSP0/CPU0:Router(config-if-serial)# scramble
RP/0/RSP0/CPU0:Router(config-if-serial)# transmit-delay 3
RP/0/RSP0/CPU0:Router(config-if-serial)# commit
```

The following is sample output from the **show interfaces serial** command:

```
RP/0/RSP0/CPU0:Router# show interfaces serial 0/0/3/0/5:23
Serial0/0/3/0/5:23 is down, line protocol is down
  Hardware is Serial network interface(s)
  Internet address is Unknown
  MTU 1504 bytes, BW 64 Kbit
     reliability 143/255, txload 1/255, rxload 1/255
  Encapsulation HDLC, crc 16,  loopback not set, keepalive set (10 sec)
  Last clearing of "show interface" counters 18:11:15
  5 minute input rate 0 bits/sec, 0 packets/sec
```

```
  5 minute output rate 0 bits/sec, 0 packets/sec
     2764 packets input, 2816 bytes, 3046 total input drops
     0 drops for unrecognized upper-level protocol
     Received 0 broadcast packets, 0 multicast packets
              0 runts, 0 giants, 0 throttles, 0 parity
     3046 input errors, 1 CRC, 0 frame, 0 overrun, 2764 ignored, 281 abort
     2764 packets output, 60804 bytes, 0 total output drops
     Output 0 broadcast packets, 0 multicast packets
     0 output errors, 0 underruns, 0 applique, 0 resets
     0 output buffer failures, 0 output buffers swapped out
     0 carrier transitions
```

# Configuring a Serial Interface with Frame Relay Encapsulation: Example

The following example shows how to create a serial interface on a SPA with Frame Relay encapsulation and a serial subinterface with a PVC on router 1:

```
RP/0/RSP0/CPU0:router# configure
RP/0/RSP0/CPU0:router(config)# interface serial 0/1/0/0
RP/0/RSP0/CPU0:router(config-if)# encapsulation frame-relay
RP/0/RSP0/CPU0:router(config-if)#frame-relay intf-type dce
RP/0/RSP0/CPU0:router(config-if)# no shutdown
RP/0/RSP0/CPU0:router(config-if)# end
Uncommitted changes found, commit them? [yes]: yes

RP/0/RSP0/CPU0:router# configure
RP/0/RSP0/CPU0:router(config)# interface serial 0/1/0/0.1 point-to-point
RP/0/RSP0/CPU0:router (config-subif)#ipv4 address 10.20.3.1/24

RP/0/RSP0/CPU0:router (config-subif)# pvc 16

RP/0/RSP0/CPU0:router (config-fr-vc)# encapsulation ietf

RP/0/RSP0/CPU0:router (config-fr-vc)# commit

RP/0/RSP0/CPU0:router(config-fr-vc)# exit

RP/0/RSP0/CPU0:router(config-subif)# exit

RP/0/RSP0/CPU0:router(config)# exit

RP/0/RSP0/CPU0:router# show interface serial 0/1/0/0
Wed Oct  8 04:14:39.946 PST DST
Serial0/1/0/0 is up, line protocol is up
  Interface state transitions: 5
  Hardware is Serial network interface(s)
  Internet address is 10.20.3.1/24
  MTU 4474 bytes, BW 44210 Kbit
     reliability 255/255, txload 0/255, rxload 0/255
  Encapsulation FRAME-RELAY, crc 16,
  Scrambling is disabled, Invert data is disabled
  LMI enq sent  0, LMI stat recvd 0, LMI upd recvd 0
  LMI enq recvd 880, LMI stat sent  880, LMI upd sent  0 , DCE LMI up
  LMI DLCI 1023  LMI type is CISCO  frame relay DCE
  Last clearing of "show interface" counters 02:23:04
```

```
  5 minute input rate 0 bits/sec, 0 packets/sec
  5 minute output rate 0 bits/sec, 0 packets/sec
     858 packets input, 11154 bytes, 0 total input drops
     0 drops for unrecognized upper-level protocol
     Received 0 runts, 0 giants, 0 throttles, 0 parity
     0 input errors, 0 CRC, 0 frame, 0 overrun, 0 ignored, 0 abort
     858 packets output, 12226 bytes, 0 total output drops
     0 output errors, 0 underruns, 0 applique, 0 resets
     0 output buffer failures, 0 output buffers swapped out
```

The following example shows how to create a serial interface on a SPA with Frame Relay encapsulation and a serial subinterface with a PVC on router 2, which is connected to router 1:

```
RP/0/RSP0/CPU0:router# configure
RP/0/RSP0/CPU0:router(config)# interface serial 0/1/0/1
RP/0/RSP0/CPU0:router(config-if)# encapsulation frame-relay
RP/0/RSP0/CPU0:router(config-if)# no shutdown
RP/0/RSP0/CPU0:router(config-if)# end
Uncommitted changes found, commit them? [yes]: yes

RP/0/RSP0/CPU0:router# configure
RP/0/RSP0/CPU0:router(config)# interface serial 0/1/0/1.1 point-to-point
RP/0/RSP0/CPU0:router (config-subif)#ipv4 address 10.20.3.2/24

RP/0/RSP0/CPU0:router (config-subif)# pvc 16

RP/0/RSP0/CPU0:router (config-fr-vc)# encapsulation ietf

RP/0/RSP0/CPU0:router (config-fr-vc)# commit

RP/0/RSP0/CPU0:router(config-fr-vc)# exit

RP/0/RSP0/CPU0:router(config-subif)# exit

RP/0/RSP0/CPU0:router(config)# exit

RP/0/RSP0/CPU0:router# show interface serial 0/1/0/1
Wed Oct  8 04:13:45.046 PST DST
Serial0/1/0/1 is up, line protocol is up
  Interface state transitions: 7
  Hardware is Serial network interface(s)
  Internet address is Unknown
  MTU 4474 bytes, BW 44210 Kbit
     reliability 255/255, txload 0/255, rxload 0/255
  Encapsulation FRAME-RELAY, crc 16,
  Scrambling is disabled, Invert data is disabled
  LMI enq sent  1110, LMI stat recvd 875, LMI upd recvd 0, DTE LMI up
  LMI enq recvd 0, LMI stat sent  0, LMI upd sent  0
  LMI DLCI 1023  LMI type is CISCO  frame relay DTE
  Last clearing of "show interface" counters 02:22:09
  5 minute input rate 0 bits/sec, 0 packets/sec
  5 minute output rate 0 bits/sec, 0 packets/sec
     853 packets input, 12153 bytes, 0 total input drops
     0 drops for unrecognized upper-level protocol
     Received 0 runts, 0 giants, 0 throttles, 0 parity
     0 input errors, 0 CRC, 0 frame, 0 overrun, 0 ignored, 0 abort
```

```
     853 packets output, 11089 bytes, 0 total output drops
     0 output errors, 0 underruns, 0 applique, 0 resets
     0 output buffer failures, 0 output buffers swapped out
```

# Configuring a Serial Interface with PPP Encapsulation: Example

The following example shows how to create and configure a serial interface with PPP encapsulation:

```
RP/0/RSP0/CPU0:router# configure
RP/0/RSP0/CPU0:router(config)# interface serial 0/3/0/0/0:0
RP/0/RSP0/CPU0:router(config-if)# ipv4 address 172.18.189.38 255.255.255.224
RP/0/RSP0/CPU0:router(config-if)# encapsulation ppp
RP/0/RSP0/CPU0:router(config-if)# no shutdown
RP/0/RSP0/CPU0:router(config-if)# ppp authentication chap MIS-access
RP/0/RSP0/CPU0:router(config-if)# end
Uncommitted changes found, commit them? [yes]: yes
```

The following example shows how to configure serial interface 0/3/0/0/0:0 to allow two additional retries after an initial authentication failure (for a total of three failed authentication attempts):

```
RP/0/RSP0/CPU0:router# configuration
RP/0/RSP0/CPU0:router(config)# interface serial 0/3/0/0/0:0
RP/0/RSP0/CPU0:router(config-if)# encapsulation ppp
RP/0/RSP0/CPU0:router(config-if)# ppp authentication chap
RP/0/RSP0/CPU0:router(config-if)# ppp max-bad-auth 3
RP/0/RSP0/CPU0:router(config-if)# end
Uncommitted changes found, commit them? [yes]: yes
```

# IPHC Configuration: Examples

This section provides the following examples:

## IPHC Profile Configuration: Example

The following example shows how to configure an IPHC Profile:

```
config


  iphc profile Profile_1 type iphc
    tcp compression
    tcp context absolute 255
    non-tcp compression
    non-tcp context absolute 255
    rtp
    refresh max-period 50
 refresh max-time 10
 refresh rtp
 feedback disable
    max-header 20
commit
```

## IPHC on a Serial Interface Configuration: Examples

### Example 1

The following example shows how to enable an IP header compression (IPHC) profile on a serial interface by attaching the profile directly to the interface:

```
config
  interface serial 0/1/0/1
    encapsulation ppp
    ipv4 iphc profile Profile_1
commit
```

### Example 2

The following example shows how to enable an IP header compression (IPHC) profile on an interface by specifying a QoS service policy that contains an IPHC profile:

```
config
  interface serial 0/1/0/1:1
    encapsulation ppp
    ipv4 iphc profile Profile_2 mode service-policy
    service-policy output ip_header_compression_policy_map
commit
```

## IPHC on Multilink Configuration: Example

The following example shows how to configure an IP header compression (IPHC) on a multilink interface:

```
config
  interface multilink 0/4/3/0/4
    ipv4 address 10.10.10.10
    encapsulation ppp
    ipv4 iphc profile Profile_1
    commit
  interface serial 0/1/0/1:1
    encapsulation ppp
    multilink group 4
    commit
```

## IPHC on a Serial Interface with MLPPP/LFI and QoS Configuration: Example

The following example shows how to configure IP header compression (IPHC) on a serial interface with LFI and by specifying a QoS service policy that contains an IPHC profile:

```
config
  interface multilink 0/4/3/0/4
    ipv4 address 10.10.10.10
      multilink
        fragment-size 128
        interleave
    ipv4 iphc profile Profile_2 mode service-policy
    service-policy output SP_2
    commit
  interface serial 0/1/0/1:2
    encapsulation ppp
    multilink group 4
```

```
commit
```

CHAPTER 18

# Configuring Frame Relay

This module describes the optional configurable Frame Relay parameters available on Packet-over-SONET/SDH (POS), multilink, and serial interfaces configured with Frame Relay encapsulation.

**Feature History for Configuring Frame Relay Interfaces on Cisco IOS XR Software**

| Release | Modification |
|---|---|
| Release 4.0.0 | Support for Frame Relay was added for the following SPAs:<br>• Cisco 2-Port Channelized OC-12c/DS0 SPA<br>• Cisco 1-Port Channelized OC-48/STM-16 SPA<br>• Cisco 8-Port OC-12c/STM-4 POS SPA<br>• Cisco 2-Port OC-48c/STM-16 POS/RPR SPA<br>• Cisco 1-Port OC-192c/STM-64 POS/RPR XFP SPA<br><br>Support for the following Frame Relay features was added for the Cisco 2-Port Channelized OC-12c/DSO SPA:<br>• Multilink Frame Relay (FRF.16)<br>• End-to-End Fragmentation (FRF.12) |
| Release 4.0.1 | Support for Frame Relay was added for the following SPAs:<br>• Cisco 1-Port Channelized OC-3/STM-1 SPA<br>• Cisco 2-Port and 4-Port Clear Channel T3/E3 SPA<br>• Cisco 4-Port OC-3c/STM-1 POS SPA<br>• Cisco 8-Port OC-3c/STM-1 POS SPA |

| | |
|---|---|
| Release 4.1.0 | Support for Frame Relay was added for the following SPAs:<br>• Cisco 4-Port Channelized T3/DS0 SPA<br>• Cisco 8-Port Channelized T1/E1 SPA |

• Configuring Frame Relay, on page 626
• Prerequisites for Configuring Frame Relay, on page 627
• Information About Frame Relay Interfaces, on page 627
• Configuring Frame Relay, on page 635
• Configuration Examples for Frame Relay, on page 651

# Configuring Frame Relay

This module describes the optional configurable Frame Relay parameters available on Packet-over-SONET/SDH (POS), multilink, and serial interfaces configured with Frame Relay encapsulation.

### Feature History for Configuring Frame Relay Interfaces on Cisco IOS XR Software

| Release | Modification |
|---|---|
| Release 4.0.0 | Support for Frame Relay was added for the following SPAs:<br>• Cisco 2-Port Channelized OC-12c/DS0 SPA<br>• Cisco 1-Port Channelized OC-48/STM-16 SPA<br>• Cisco 8-Port OC-12c/STM-4 POS SPA<br>• Cisco 2-Port OC-48c/STM-16 POS/RPR SPA<br>• Cisco 1-Port OC-192c/STM-64 POS/RPR XFP SPA<br><br>Support for the following Frame Relay features was added for the Cisco 2-Port Channelized OC-12c/DSO SPA:<br>• Multilink Frame Relay (FRF.16)<br>• End-to-End Fragmentation (FRF.12) |

| | |
|---|---|
| Release 4.0.1 | Support for Frame Relay was added for the following SPAs:<br>• Cisco 1-Port Channelized OC-3/STM-1 SPA<br>• Cisco 2-Port and 4-Port Clear Channel T3/E3 SPA<br>• Cisco 4-Port OC-3c/STM-1 POS SPA<br>• Cisco 8-Port OC-3c/STM-1 POS SPA |
| Release 4.1.0 | Support for Frame Relay was added for the following SPAs:<br>• Cisco 4-Port Channelized T3/DS0 SPA<br>• Cisco 8-Port Channelized T1/E1 SPA |

# Prerequisites for Configuring Frame Relay

You must be in a user group associated with a task group that includes the proper task IDs. The command reference guides include the task IDs required for each command. If you suspect user group assignment is preventing you from using a command, contact your AAA administrator for assistance.

Before configuring Frame Relay, ensure that these conditions are met:

- Your hardware must support POS or serial interfaces.
- You have enabled Frame Relay encapsulation on your interface with the encapsulation **frame relay** command, as described in the appropriate module:
  - To enable Frame Relay encapsulation on a multilink bundle interface, see the Configuring Multilink Frame Relay Bundle Interfaces.
  - To enable Frame Relay encapsulation on a POS interface, see the  module in this manual.
  - To enable Frame Relay encapsulation on a serial interface, see the  module in this manual.

# Information About Frame Relay Interfaces

These sections explain the various aspects of configuring Frame Relay interfaces:

## Frame Relay Encapsulation

On the Cisco ASR 9000 Series Router, Frame Relay is supported on POS and serial main interfaces, and on PVCs that are configured under those interfaces. To enable Frame Relay encapsulation on an interface, use the encapsulation frame-relay command in interface configuration mode.

Frame Relay interfaces support two types of encapsulated frames:

- Cisco (this is the default)
- IETF

Use the **encapsulation frame-relay** command in interface configuration mode to configure Cisco or IETF encapsulation on a PVC.

**Note** If the encapsulation type is not configured explicitly for a PVC with the **encapsulation** command, then that PVC inherits the encapsulation type from the main interface.

The **encapsulation frame relay** and **encap (PVC)** commands are described in the following modules:

- To enable Frame Relay encapsulation on a POS interface, see the  module in this manual.
- To enable Frame Relay encapsulation on a serial interface, see the  module in this manual.

When an interface is configured with Frame Relay encapsulation and no additional configuration commands are applied, the default interface settings shown in Table 26: Frame Relay Encapsulation Default Settings are present. These default settings can be changed by configuration as described in this module.

***Table 26: Frame Relay Encapsulation Default Settings***

| Parameter | Configuration File Entry | Default Settings | Command Mode |
|---|---|---|---|
| PVC Encapsulation | **encap** {**cisco** \| **ietf**} | **cisco**<br>**Note** When the **encap** command is not configured, the PVC encapsulation type is inherited from the Frame Relay main interface. | PVC configuration |
| Type of support provided by the interface | **frame-relay intf-type** {**dce** \| **dte**} | **dte** | Interface configuration |

| Parameter | Configuration File Entry | Default Settings | Command Mode |
|---|---|---|---|
| LMI type supported on the interface | **frame-relay lmi-type** [**ansi** \| **cisco** \| **q933a**] | For a DCE, the default setting is **cisco**.<br>For a DTE, the default setting is synchronized to match the LMI type supported on the DCE.<br>**Note** To return an interface to its default LMI type, use the **no frame-relay lmi-type** [**ansi** \| **cisco** \| **q933a**] command. | Interface configuration |
| Disable or enable LMI | **frame-relay lmi disable** | LMI is enabled by default on Frame Relay interfaces.<br>To reenable LMI on an interface after it has been disabled, use the **no frame-relay lmi disable** command. | Interface configuration |

**Note** The default settings of LMI polling-related commands appear in Table 2 on page 667 and Table 27: LMI Polling Configuration Commands for DTE.

## LMI

The Local Management Interface (LMI) protocol monitors the addition, deletion, and status of PVCs. LMI also verifies the integrity of the link that forms a Frame Relay User-Network Interface (UNI).

Frame Relay interfaces supports the following types of LMI on UNI interfaces:

- ANSI—ANSI T1.617 Annex D
- Q.933—ITU-T Q.933 Annex A
- Cisco

Use the **frame-relay lmi-type** command to configure the LMI type to be used on an interface.

**Note** The LMI type that you use must correspond to the PVCs configured on the main interface. The LMI type must match on both ends of a Frame Relay connection.

If your router functions as a switch connected to another non-Frame Relay router, use the **frame-relay intf-type dce** command to configure the LMI type to support data communication equipment (DCE).

If your router is connected to a Frame Relay network, use the **frame-relay intf-type dte** command to configure the LMI type to support data terminal equipment (DTE).

**Note** LMI type auto-sensing is supported on DTE interfaces by default.

Use the **show frame-relay lmi and show frame-relay lmi-info** commands in EXEC mode to display information and statistics for the Frame Relay interfaces in your system. (When specifying the *type* and *interface-path-id* arguments, you must specify information for the main interface.) You can modify the error threshold, event count, and polling verification timer and then use the **show frame-relay lmi** command to gather information that can help you monitor and troubleshoot Frame Relay interfaces.

If the LMI type is **cisco** (the default LMI type), the maximum number of PVCs that can be supported under a single interface is related to the MTU size of the main interface. Use the following formula to calculate the maximum number of PVCs supported on a card or SPA:

```
(MTU - 13)/8 = maximum number of PVCs
```

The default number of PVCs supported on POS PVCs configured with **cisco** LMI is 557, while the default number of PVCs supported on serial PVCs configured with **cisco** LMI is 186.

For LMI types that are not from Cisco, up to 992 PVCs are supported under a single main interface.

**Note** If a specific LMI type is configured on an interface, use the **no frame-relay lmi-type** [**ansi** | **cisco** | **q933a**] command to bring the interface back to the default LMI type.

This table describes the commands that can be used to modify LMI polling options on PVCs configured for a DCE.

LMI Polling Configuration Commands for DCE

| Parameter | Configuration File Entry | Default Settings |
|---|---|---|
| Sets the error threshold on a DCE interface. | lmi-n392dce *threshold* | **3** |
| Sets the monitored event count. | lmi-n393dce *events* | **4** |
| Sets the polling verification timer on the DCE end. | lmi-t392dce *seconds* | **15** |

This table describes the commands that can be used to modify LMI polling options on PVCs configured for a DTE.

*Table 27: LMI Polling Configuration Commands for DTE*

| Parameter | Configuration File Entry | Default Settings |
|---|---|---|
| Set the number of Line Integrity Verification (LIV) exchanges performed before requesting a full status message. | lmi-n391dte *polling-cycles* | **6** |
| Sets the error threshold. | lmi-n392dte *threshold* | **3** |
| Sets the monitored event count. | **lmi-n393dte** *events* | **4** |
| Sets the polling interval (in seconds) between each status inquiry from the DTE end. | **frame-relay lmi-t391dte** *seconds* | **10** |

# Multilink Frame Relay (FRF.16)

Multilink Frame Relay (MFR) is supported only on the following shared port adapters (SPAs):

- Cisco 1-Port Channelized STM-1/OC-3 SPA
- Cisco 2-Port Channelized OC-12c/DSO SPA

## Multilink Frame Relay High Availability

MFR supports the following levels of high availability support:

- MFR supports a process restart, but some statistics will be reset during a restart of certain processes.
- MFR member links remain operational during a route switch processor (RSP) switchover.

## Multilink Frame Relay Configuration Overview

A multilink Frame Relay interface is part of a multilink bundle that allows Frame Relay encapsulation on its interfaces. You create a multilink Frame Relay interface by configuring the following components:

- MgmtMultilink controller
- Multilink bundle interface that allows Frame Relay encapsulation
- Bundle identifier name
- Multilink Frame Relay subinterfaces
- Bundle interface bandwidth class
- Serial interfaces

### MgmtMultilink Controller

You configure a multilink bundle under a controller, using the following commands:

**controller MgmtMultilink** *rack/slot/bay/controller-id*

**bundle** *bundleId*

This configuration creates the controller for a generic multilink bundle. The controller ID number is the zero-based index of the controller chip. Currently, the SPAs that support multilink Frame Relay have only one controller per bay; therefore, the controller ID number is always zero (0).

### Multilink Bundle Interface

After you create the multilink bundle, you create a multilink bundle interface that allows Frame Relay encapsulation, using the following commands:

**interface multilink** *interface-path-id*

**encapsulation frame-relay**

This configuration allows you to create multilink Frame Relay subinterfaces under the multilink bundle interface.

**Note** After you set the encapsulation on a multilink bundle interface to Frame Relay, you cannot change the encapsulation if the interface has member links or any member links associated with a multilink bundle.

### Bundle Identifier Name

**Note** Bundle identifier name is configurable only under Frame Relay Forum 16.1 (FRF 16.1).

The bundle identifier (**bid**) name value identifies the bundle interface at both endpoints of the interface. The bundle identifier name is exchanged in the information elements to ensure consistent link assignments.

By default, the interface name, for example, Multilink 0/4/1/0/1, is used as the bundle identifier name. However, you can optionally create a name using the **frame-relay multilink bid** command.

**Note** Regardless of whether you use the default name or create a name using the frame-relay multilink bid command, it is recommended that each bundle have a unique name.

The bundle identifier name can be up to 50 characters including the null termination character. The bundle identifier name is configured at the bundle interface level and is applied to each member link.

You configure the bundle identifier name using the following commands:

**interface multilink** *interface-path-id*

**frame-relay multilink bid** *bundle-id-name*

### Multilink Frame Relay Subinterfaces

You configure a multilink Frame Relay subinterface, using the following command:

```
interface multilink interface-path-id[.subinterface {l2transport | point-to-point}]
```

You can configure up to 992 subinterfaces on a multilink bundle interface.

**Note** You configure specific Frame Relay interface features at the subinterface level.

#### Multilink Frame-Relay Subinterface Features

The following commands are available to set specific features on a multilink Frame Relay bundle subinterface:

- **mtu** *MTU size*
- **description**
- **shutdown**
- **bandwidth** *bandwidth*
- **service-policy {input** | **output}** *policymap-name*

**Note** When entering the **service-policy** command, which enables you to attach a policy map to a multilink Frame Relay bundle subinterface, you must do so while in Frame Relay PVC configuration mode. For more information, see Configuring Multilink Frame Relay Bundle Interfaces.

#### Bundle Interface Bandwidth Class

**Note** Bandwidth class is configurable only under a multilink bundle interface.

You can configure one of three types of bandwidth classes on a multilink Frame Relay interface:

- a—Bandwidth Class A
- b—Bandwidth Class B
- c—Bandwidth Class C

When Bandwidth Class A is configured and one or more member links are up (PH_ACTIVE), the bundle interface is also up and BL_ACTIVATE is signaled to the Frame Relay connections. When all the member links are down, the bundle interface is down and BL_DEACTIVATE is signaled to the Frame Relay connections.

When Bandwidth Class B is configured and all the member links are up (PH_ACTIVE), the bundle interface is up and BL_ACTIVATE is signaled to the Frame Relay connections. When any member link is down, the bundle interface is down and BL_ACTIVATE is signaled to the Frame Relay connections.

When Bandwidth Class C is configured, you must also set the bundle link threshold to a value between 1 and 255. The threshold value is the minimum number of links that must be up (PH_ACTIVE) for the bundle interface to be up and for BL_ACTIVATE to be signaled to the Frame Relay connections. When the number of links that are up falls below this threshold, the bundle interface goes down and BL_DEACTIVATE is signaled to the Frame Relay connections. When 1 is entered as the threshold value, the behavior is identical

to Bandwidth Class A. If you enter a threshold value that is greater than the number of member links that are up, the bundle remains down.

You configure the bandwidth class for a Frame Relay multilink bundle interface using the following commands:

```
interface multilink interface-path-id
frame-relay multilink bandwidth-class {a | b | c [threshold]}
```

The default is a (Bandwidth Class A)

### Serial Interfaces

After the T3 and T1 controllers are configured, you can add serial interfaces to the multilink Frame Relay bundle subinterface by configuring the serial interface, encapsulating it as multilink Frame Relay (mfr), assigning it to the bundle interface (specified by the multilink group number), and configuring a name for the link. You may also configure MFR acknowledge timeout value, retry count for retransmissions and hello interval, for the bundle link.

You configure a multilink Frame Relay serial interface using the following commands:

**interface serial** *rack/slot/module/port/t1-num:channel-group-number*

**encapsulation mfr**

**multilink group** *group number*

**frame-relay multilink lid** *link-id name*

**frame-relay multilink ack** *ack-timeout*

**frame-relay multilink hello** *hello-interval*

**frame-relay multilink retry** *retry-count*

**Note** All serial links in an MFR bundle inherit the value of the **mtu** command from the multilink interface. Therefore, you should not configure the **mtu** command on a serial interface before configuring it as a member of an MFR bundle. The Cisco IOS XR software blocks attempts to configure a serial interface as a member of an MFR bundle if the interface is configured with a nondefault MTU value as well as attempts to change the **mtu** command value for a serial interface that is configured as a member of an MFR bundle.

### Show Commands

You can verify a multilink Frame Relay serial interface configuration using the following **show** commands:

**show frame-relay multilink location** *node id*

**show frame-relay multilink interface** serial *interface-path-id [***detail** | **verbose***]*

The following example shows the display output of the **show frame-relay multilink location** command:

```
RP/0/RSP0/CPU0:router# show frame-relay multilink  location  0/4/cpu0
Member interface: Serial0/4/2/0/9:0, ifhandle 0x05007b00
HW state = Up, link state = Up
Member of bundle interface Multilink0/4/2/0/2 with ifhandle 0x05007800

Bundle interface: Multilink0/4/2/0/2, ifhandle 0x05007800
    Member Links: 4 active, 0 inactive
```

```
    State = Up,   BW Class = C (threshold   3)
    Member Links:
    Serial0/4/2/0/12:0, HW state = Up, link state = Up
    Serial0/4/2/0/11:0, HW state = Up, link state = Up
    Serial0/4/2/0/10:0, HW state = Up, link state = Up
    Serial0/4/2/0/9:0, HW state = Up, link state = Up

Member interface: Serial0/4/2/0/10:0, ifhandle 0x05007c00
HW state = Up, link state = Up
Member of bundle interface Multilink0/4/2/0/2 with ifhandle 0x05007800

Member interface: Serial0/4/2/0/11:0, ifhandle 0x05007d00
HW state = Up, link state = Up
Member of bundle interface Multilink0/4/2/0/2 with ifhandle 0x05007800

Member interface: Serial0/4/2/0/12:0, ifhandle 0x05007e00
HW state = Up, link state = Up
Member of bundle interface Multilink0/4/2/0/2 with ifhandle 0x05007800
```

The following example shows the display output of

```
RP/0/RSP0/CPU0:router# show frame-relay multilink interface serial 0/4/2/0/10:0

Member interface: Serial0/4/2/0/10:0, ifhandle 0x05007c00
HW state = Up, link state = Up
Member of bundle interface Multilink0/4/2/0/2 with ifhandle 0x05007800
```

## End-to-End Fragmentation (FRF.12)

You can configure an FRF.12 end-to-end fragmentation connection using the data-link connection identifier (DLCI). However, it must be done on a channelized Frame Relay serial interface.

**Note** The **fragment end-to-end** command is not allowed on Packet-over-SONET/SDH (POS) interfaces or under the DLCI of a multilink Frame Relay bundle interface.

You configure FRF.12 end-to-end fragmentation on a DLCI connection using the following command:

**fragment end-to-end** *fragment-size*

The *fragment-size* argument defines the size of the fragments, in bytes, for the serial interface.

**Note** On a DLCI connection, we highly recommend that you configure an egress service policy that classifies packets into high and low priorities, so that interleaving of high-priority and low-priority fragments occurs.

# Configuring Frame Relay

These sections describe how to configure Frame Relay interfaces.

# Modifying the Default Frame Relay Configuration on an Interface

Perform this task to modify the default Frame Relay parameters on a Packet-over-SONET/SDH (POS), multilink, or serial interface with Frame Relay encapsulation.

### Before you begin

Before you can modify the default Frame Relay configuration, you need to enable Frame Relay on the interface, as described in the following modules:

- To enable Frame Relay encapsulation on a POS interface, see the *Configuring POS Interfaces* module in this manual.
- To enable Frame Relay encapsulation on a serial interface, see the *Configuring Serial Interfaces* module in this manual.

**Note** Before enabling Frame Relay encapsulation on a POS or serial interface, make certain that you have not previously assigned an IP address to the interface. If an IP address is assigned to the interface, you will not be able to enable Frame Relay encapsulation. For Frame Relay, the IP address and subnet mask are configured on the subinterface.

**Restrictions**

- The LMI type must match on both ends of the connection for the connection to be active.
- Before you can remove Frame Relay encapsulation on an interface and reconfigure that interface with PPP or HDLC encapsulation, you must remove all interfaces, subinterface, LMI, and Frame Relay configuration from that interface.

## SUMMARY STEPS

1. **configure**
2. **interface** *type interface-path-id*
3. **frame-relay intf-type** {**dce** | **dte**}
4. **frame-relay lmi-type** [**ansi** | **q933a** | **cisco**]
5. **encap** {**cisco** | **ietf**}
6. **end** or **commit**
7. **show interfaces** [**summary** | [*type interface-path-id*] [**brief** | **description** | **detail | accounting [rates]]] [**location** *node-id*]

## DETAILED STEPS

| | Command or Action | Purpose |
|---|---|---|
| **Step 1** | **configure**<br>**Example:**<br>`RP/0/RSP0/CPU0:router# configure` | Enters global configuration mode. |

| | Command or Action | Purpose |
|---|---|---|
| **Step 2** | **interface** *type interface-path-id*<br>**Example:**<br>`RP/0/RSP0/CPU0:router(config)# interface pos 0/4/0/1` | Enters interface configuration mode. |
| **Step 3** | **frame-relay intf-type** {**dce** \| **dte**}<br>**Example:**<br>`RP/0/RSP0/CPU0:router(config-if)# frame-relay intf-type dce` | Configures the type of support provided by the interface.<br>• If your router functions as a switch connected to another router, use the **frame-relay intf-type dce** command to configure the LMI type to support data communication equipment (DCE).<br>• If your router is connected to a Frame Relay network, use the **frame-relay intf-type dte** command to configure the LMI type to support data terminal equipment (DTE).<br>**Note** • The default interface type is DTE. |
| **Step 4** | **frame-relay lmi-type** [**ansi** \| **q933a** \| **cisco**]<br>**Example:**<br>`RP/0/RSP0/CPU0:router(config-if)# frame-relay lmi-type ansi` | Selects the LMI type supported on the interface.<br>• Enter the **frame-relay lmi-type ansi** command to use LMI as defined by ANSI T1.617a-1994 Annex D.<br>• Enter the **frame-relay lmi-type cisco** command to use LMI as defined by Cisco (not standard).<br>• Enter the **frame-relay lmi-type q933a** command to use LMI as defined by ITU-T Q.933 (02/2003) Annex A.<br>**Note** • The default LMI type is Cisco. |
| **Step 5** | **encap** {**cisco** \| **ietf**}<br>**Example:**<br>`RP/0/RSP0RP0/CPU0:router (config-fr-vc)# encap ietf` | Configures the encapsulation for a Frame Relay PVC.<br>**Note** • If the encapsulation type is not configured explicitly for a PVC, then that PVC inherits the encapsulation type from the main interface. |
| **Step 6** | **end** or **commit**<br>**Example:**<br>`RP/0/RSP0RP0/CPU0:router(config-if)# end`<br>or<br>`RP/0/RSP0RP0/CPU0:router(config-if)# commit` | Saves configuration changes.<br>• When you issue the **end** command, the system prompts you to commit changes:<br>`Uncommitted changes found, commit them before exiting(yes/no/cancel)? [cancel]:` |

| | Command or Action | Purpose |
|---|---|---|
| | | • Entering **yes** saves configuration changes to the running configuration file, exits the configuration session, and returns the router to EXEC mode.<br>• Entering **no** exits the configuration session and returns the router to EXEC mode without committing the configuration changes.<br>• Entering **cancel** leaves the router in the current configuration session without exiting or committing the configuration changes.<br>• Use the **commit** command to save the configuration changes to the running configuration file and remain within the configuration session. |
| **Step 7** | **show interfaces** [**summary** \| [*type interface-path-id*] [**brief** \| **description** \| **detail \| accounting [rates]]] [location** *node-id*]<br>**Example:**<br>`RP/0/RSP0RP0/CPU0:router# show interface pos 0/4/0/1` | (Optional) Verifies the configuration for the specified interface. |

# Disabling LMI on an Interface with Frame Relay Encapsulation

Perform this task to disable LMI on interfaces that have Frame Relay encapsulation.

**Note** LMI is enabled by default on interfaces that have Frame Relay encapsulation enabled. To reenable LMI on an interface after it has been disabled, use the **no frame-relay lmi disable** command in interface configuration mode.

## SUMMARY STEPS

1. **configure**
2. **interface** *type interface-path-id*
3. **frame-relay lmi disable**
4. **end** or **commit**
5. **show interfaces** [**summary** | [*type interface-path-id*] [**brief** | **description** | **detail | accounting [rates]]] [location** *node-id*]

## DETAILED STEPS

| | Command or Action | Purpose |
|---|---|---|
| **Step 1** | **configure**<br>**Example:**<br>`RP/0/RSP0/CPU0:router# configure` | Enters global configuration mode. |
| **Step 2** | **interface** *type interface-path-id*<br>**Example:**<br>`RP/0/RSP0/CPU0:router(config)# interface POS 0/4/0/1` | Enters interface configuration mode. |
| **Step 3** | **frame-relay lmi disable**<br>**Example:**<br>`RP/0/RSP0/CPU0:router(config-if)# frame-relay lmi disable` | Disables LMI on the specified interface. |
| **Step 4** | **end** or **commit**<br>**Example:**<br>`RP/0/RSP0RP0/CPU0:router(config-if)# end`<br>or<br>`RP/0/RSP0RP0/CPU0:router(config-if)# commit` | Saves configuration changes.<br>• When you issue the **end** command, the system prompts you to commit changes:<br>`Uncommitted changes found, commit them before exiting(yes/no/cancel)? [cancel]:`<br>• Entering **yes** saves configuration changes to the running configuration file, exits the configuration session, and returns the router to EXEC mode.<br>• Entering **no** exits the configuration session and returns the router to EXEC mode without committing the configuration changes.<br>• Entering **cancel** leaves the router in the current configuration session without exiting or committing the configuration changes.<br>• Use the **commit** command to save the configuration changes to the running configuration file and remain within the configuration session. |
| **Step 5** | **show interfaces** [**summary** \| [*type interface-path-id*] [**brief** \| **description** \| **detail** \| **accounting [rates]]] [location** *node-id*]<br>**Example:**<br>`RP/0/RSP0RP0/CPU0:router# show interfaces POS 0/1/0/0` | (Optional) Verifies that LMI is disabled on the specified interface. |

# Configuring Multilink Frame Relay Bundle Interfaces

Perform these steps to configure a multilink Frame Relay (MFR) bundle interface and its subinterfaces.

### Before you begin

Before configuring MFR bundles, be sure you have the following SPA installed:

- 1-Port Channelized STM-1/OC-3 SPA
- 2-Port Channelized OC-12c/DS0 SPA

### Restrictions

- All member links in a multilink Frame Relay bundle interface must be of the same type (for example, T1s or E1s). The member links must have the same framing type, such as point-to-point, and they must have the same bandwidth class.
- All member links must be full T1s or E1s. Fractional links, such as DS0s, are not supported.
- All member links must reside on the same SPA; otherwise, they are considered to be unrelated bundles.
- All member links must be connected to the same line card or SPA at the far end.
- A maximum of 992 MFR subinterfaces is supported on each main interface, based on the supported DLCI range 16–1007.
- The Cisco 1-Port Channelized OC-3/STM-1 SPA and 2-Port Channelized OC-12c/DS0 SPA have the following additional guidelines:
  - A maximum of 700 MFR bundles per line card is supported.
  - A maximum of 2600 MFR bundles per system is supported.
  - A maximum of 4000 Frame Relay Layer 3 subinterfaces per line card is supported.
  - A maximum of 8000 Frame Relay Layer 3 subinterfaces per system is supported.
- Fragmentation on a Frame Relay subinterface that is part of an MLFR bundle is not supported.
- All serial links in an MFR bundle inherit the value of the **mtu** command from the multilink interface. Therefore, you should not configure the **mtu** command on a serial interface before configuring it as a member of an MFR bundle. The Cisco IOS XR software blocks the following:
  - Attempts to configure a serial interface as a member of an MFR bundle if the interface is configured with a nondefault MTU value.
  - Attempts to change the **mtu** command value for a serial interface that is configured as a member of an MFR bundle.

## SUMMARY STEPS

1. **configure**
2. **controller MgmtMultilink** *rack/slot/bay/controller-id*
3. **exit**
4. **controller t3** *interface-path-id*

5. **mode** *type*
6. **clock source** {**internal** | **line**}
7. **exit**
8. **controller** {**t1** | **e1**} *interface-path-id*
9. **channel-group** *channel-group-number*
10. **timeslots** *range*
11. **exit**
12. **exit**
13. **interface multilink** *interface-path-id[.subinterface {***l2transport** | **point-to-point***}]*
14. **encapsulation frame-relay**
15. **frame-relay multilink bid** *bundle-id-name* Router(config-if)# frame-relay multilink bid MFRBundle
16. **frame-relay multilink bandwidth-class** {**a** | **b** | **c** [*threshold*]}
17. **multilink fragment-size** *size* [**fragment-counter**]
18. **exit**
19. **interface multilink** *interface-path-id[.subinterface {***l2transport** | **point-to-point***}]*
20. **ipv4 address** *ip-address*
21. **pvc** *dlci*
22. **service-policy** {**input** | **output**} *policy-map*
23. **exit**
24. **exit**
25. **interface serial** *interface-path-id*
26. **encapsulation mfr**
27. **multilink group** *group-id*
28. **frame-relay multilink lid** *link-id name*
29. **frame-relay multilink ack** *ack-timeout*
30. **frame-relay multilink hello** *hello-interval*
31. **frame-relay multilink retry** *retry-count*
32. **exit**
33. **end** or **commit**
34. **exit**
35. **show frame-relay multilink interface** *type interface-path-id [***detail** | **verbose***]*

## DETAILED STEPS

| | Command or Action | Purpose |
|---|---|---|
| **Step 1** | **configure**<br>**Example:**<br>`RP/0/RSP0/CPU0:router# config` | Enters global configuration mode. |
| **Step 2** | **controller MgmtMultilink** *rack/slot/bay/controller-id*<br>**Example:**<br>`RP/0/RSP0/CPU0:router(config)# controller MgmtMultilink 0/1/0/0` | Creates the controller for a generic multilink bundle in the *rack/slot/bay/controller-id* notation and enters the multilink management configuration mode. The controller ID number is the zero-based index of the controller chip. Currently, the SPAs that support multilink Frame Relay |

| | Command or Action | Purpose |
|---|---|---|
| | | have only one controller per bay; therefore, the controller ID number is always zero (0). |
| **Step 3** | **exit**<br>**Example:**<br>`RP/0/RSP0/CPU0:router(config-mgmtmultilink)# exit` | Exits the multilink management configuration mode. |
| **Step 4** | **controller t3** *interface-path-id*<br>**Example:**<br>`RP/0/RSP0/CPU0:router(config)# controller t3 0/1/0/0` | Specifies the T3 controller name in the *rack/slot/module/port* notation and enters T3 configuration mode. |
| **Step 5** | **mode** *type*<br>**Example:**<br>`RP/0/RSP0/CPU0:router(config-t3)# mode t1` | Configures the type of multilinks to channelize; for example, 28 T1s. |
| **Step 6** | **clock source** {**internal** \| **line**}<br>**Example:**<br>`RP/0/RSP0/CPU0:router(config-t3)# clock source internal` | (Optional) Sets the clocking for individual E3 links.<br>**Note** • The default clock source is **internal**.<br>• When configuring clocking on a serial link, you must configure one end to be **internal**, and the other end to be **line**. If you configure **internal** clocking on both ends of a connection, framing slips occur. If you configure **line** clocking on both ends of a connection, the line does not come up. |
| **Step 7** | **exit**<br>**Example:**<br>`RP/0/RSP0/CPU0:router(config-t3)# exit` | Exits T3/E3 controller configuration mode. |
| **Step 8** | **controller** {**t1** \| **e1**} *interface-path-id*<br>**Example:**<br>`RP/0/RSP0/CPU0:router(config)# controller t1 0/1/0/0/0` | Enters T1 or E1 configuration mode. |
| **Step 9** | **channel-group** *channel-group-number*<br>**Example:**<br>`RP/0/RSP0/CPU0:router(config-t1)# channel-group 0` | Creates a T1 channel group and enters channel group configuration mode for that channel group. |

| | Command or Action | Purpose |
|---|---|---|
| **Step 10** | **timeslots** *range*<br>**Example:**<br>`RP/0/RSP0/CPU0:router(config-t1-channel_group)# timeslots 1-24` | Associates one or more DS0 time slots to a channel group and creates an associated serial subinterface on that channel group.<br>• For T1 controllers—Range is from 1 to 24 time slots.<br>• For E1 controllers—Range is from 1 to 31 time slots.<br>• You can assign all time slots to a single channel group, or you can divide the time slots among several channel groups. |
| **Step 11** | **exit**<br>**Example:**<br>`RP/0/RSP0/CPU0:router(config-t1-channel_group)# exit` | Exits channel group configuration mode. |
| **Step 12** | **exit**<br>**Example:**<br>`RP/0/RSP0/CPU0:router(config-t1)# exit` | Exits T1 configuration mode. |
| **Step 13** | **interface multilink** *interface-path-id[.subinterface {***l2transport** \| **point-to-point***}]*<br>**Example:**<br>`RP/0/RSP0/CPU0:router(config)# interface Multilink 0/1/0/0/100` | Creates a multilink bundle interface where you can specify Frame Relay encapsulation for the bundle. You create multilink Frame Relay subinterfaces under the multilink bundle interface. |
| **Step 14** | **encapsulation frame-relay**<br>**Example:**<br>`Router(config-if)# encapsulation frame-relay` | Specifies the Frame Relay encapsulation type. |
| **Step 15** | **frame-relay multilink bid** *bundle-id-name*<br>Router(config-if)# frame-relay multilink bid MFRBundle | (Optional) By default, the interface name, for example, Multilink 0/4/1/0/1, is used as the bundle identifier name. However, you can optionally create a name using the **frame-relay multilink bid** command. |
| **Step 16** | **frame-relay multilink bandwidth-class** {**a** \| **b** \| **c** [*threshold*]}<br>**Example:**<br>`Router(config-if)# frame-relay multilink bandwidth-class a` | Configures one of three types of bandwidth classes on a multilink Frame Relay interface:<br>• a—Bandwidth Class A<br>• b—Bandwidth Class B<br>• c—Bandwidth Class C<br>The default is **a** (Bandwidth Class A). |

| | Command or Action | Purpose |
|---|---|---|
| **Step 17** | **multilink fragment-size** *size* [**fragment-counter**]<br>**Example:**<br>`RP/0/0/CPU0:router(config-if)# multilink fragment-size 256 fragment-counter` | (Optional) Specifies the size of the multilink fragments, and optionally enables counting of the fragmented packets. The default is no fragments. |
| **Step 18** | **exit**<br>**Example:**<br>`RP/0/RSP0/CPU0:router(config-if)# exit` | Exits interface configuration mode. |
| **Step 19** | **interface multilink** *interface-path-id[.subinterface {***l2transport** \| **point-to-point***}]*<br>**Example:**<br>`RP/0/RSP0/CPU0:router(config)# interface Multilink 0/1/0/0/100.16 point-to-point` | Creates a multilink subinterface in the *rack*/*slot*/*bay*/*controller-id bundleId.subinterace* [**point-to-point** \| **l2transport** ] notation and enters the subinterface configuration mode.<br>• **l2transport**—Treat as an attachment circuit<br>• **point-to-point**—Treat as a point-to-point link<br>You can configure up to 992 subinterfaces on a multilink bundle interface. The DLCIs are 16 to 1007. |
| **Step 20** | **ipv4 address** *ip-address*<br>**Example:**<br>`RP/0/RSP0/CPU0:router(config-subif)# ipv4 address 3.1.100.16 255.255.255.0` | Assigns an IP address and subnet mask to the interface in the format:<br>`A.B.C.D/prefix` or `A.B.C.D/mask` |
| **Step 21** | **pvc** *dlci*<br>**Example:**<br>`RP/0/RSP0/CPU0:router (config-subif)# pvc 16` | Creates a POS permanent virtual circuit (PVC) and enters Frame Relay PVC configuration submode.<br>Replace *dlci* with a PVC identifier, in the range from 16 to 1007.<br>**Note** • Only one PVC is allowed per subinterface. |
| **Step 22** | **service-policy** {**input** \| **output**} *policy-map*<br>**Example:**<br>`RP/0/RSP0/CPU0:router(config-fr-vc)# service-policy output policy-mapA` | Attaches a policy map to an input subinterface or output subinterface. When attached, the policy map is used as the service policy for the subinterface.<br>**Note** • For information on creating and configuring policy maps, refer to *Cisco IOS XR Modular Quality of Service Configuration Guide*. |
| **Step 23** | **exit**<br>**Example:**<br>`RP/0/RSP0/CPU0:router(config-fr-vc)# exit` | Exits the Frame-Relay virtual circuit mode. |

| | Command or Action | Purpose |
|---|---|---|
| **Step 24** | **exit**<br>**Example:**<br>`RP/0/RSP0/CPU0:router(config-subif)# exit` | Exits the subinterface configuration mode. |
| **Step 25** | **interface serial** *interface-path-id*<br>**Example:**<br>`RP/0/RSP0/CPU0:router(config)# interface serial 0/1/0/0/0/0:0` | Specifies the complete interface number with the *rack/slot/module/port/T3Num/T1num:instance* notation. |
| **Step 26** | **encapsulation mfr**<br>**Example:**<br>`RP/0/RSP0/CPU0:router(config)# encapsulation mfr` | Enables multilink Frame Relay on the serial interface. |
| **Step 27** | **multilink group** *group-id*<br>**Example:**<br>`RP/0/RSP0/CPU0:router(config-if)# multilink group 100` | Specifies the multilink group ID for this interface. |
| **Step 28** | **frame-relay multilink lid** *link-id name*<br>**Example:**<br>`RP/0/RSP0/CPU0:router(config-if)# frame-relay multilink lid sj1` | Configures a name for the Frame Relay multilink bundle link. |
| **Step 29** | **frame-relay multilink ack** *ack-timeout*<br>**Example:**<br>`RP/0/RSP0/CPU0:router(config-if)# frame-relay multilink ack 5` | Configures the acknowledge timeout value for the Frame Relay multilink bundle link. |
| **Step 30** | **frame-relay multilink hello** *hello-interval*<br>**Example:**<br>`RP/0/RSP0/CPU0:router(config-if)# frame-relay multilink hello 60` | Configures the hello interval for the Frame Relay multilink bundle link. |
| **Step 31** | **frame-relay multilink retry** *retry-count*<br>**Example:**<br>`RP/0/RSP0/CPU0:router(config-if)# frame-relay multilink retry 2` | Configures the retry count for retransmissions for the Frame Relay multilink bundle link. |
| **Step 32** | **exit**<br>**Example:** | Exits interface configuration mode. |

| | Command or Action | Purpose |
|---|---|---|
| | `RP/0/RSP0/CPU0:router(config-if)# exit` | |
| **Step 33** | **end** or **commit**<br>**Example:**<br>`RP/0/RSP0/CPU0:router(config-if)# end`<br>or<br>`RP/0/RSP0/CPU0:router(config-if)# commit` | Saves configuration changes.<br>• When you issue the **end** command, the system prompts you to commit changes:<br>`Uncommitted changes found, commit them before exiting(yes/no/cancel)? [cancel]:`<br>• Entering **yes** saves configuration changes to the running configuration file, exits the configuration session, and returns the router to EXEC mode.<br>• Entering **no** exits the configuration session and returns the router to EXEC mode without committing the configuration changes.<br>• Entering **cancel** leaves the router in the current configuration session without exiting or committing the configuration changes.<br>• Use the **commit** command to save the configuration changes to the running configuration file and remain within the configuration session. |
| **Step 34** | **exit**<br>**Example:**<br>`RP/0/RSP0/CPU0:router(config)# exit` | Exits global configuration mode. |
| **Step 35** | **show frame-relay multilink interface** *type interface-path-id [***detail** \| **verbose***]*<br>**Example:**<br>`RP/0/RSP0/CPU0:router# show frame-relay multilink interface Multilink 0/5/1/0/1` | Shows the information retrieved from the interface description block (IDB), including bundle-specific information and Frame Relay information. |

# Configuring FRF.12 End-to-End Fragmentation on a Channelized Frame Relay Serial Interface

Perform the following steps to configure FRF.12 end-to-end fragmentation on a channelized Frame Relay serial interface.

## SUMMARY STEPS

1. **config**
2. **controller t3** *interface-path-id*

3. **mode** *type*
4. **clock source** {**internal** | **line**}
5. **exit**
6. **controller t1** *interface-path-id*
7. **channel-group** *channel-group-number*
8. **timeslots** *range* RP/0/RSP0/CPU0:router(config-t1-channel_group)# timeslots 1-24
9. **exit**
10. **exit**
11. **interface serial** *interface-path-id*
12. **encapsulation frame-relay**
13. **exit**
14. **interface serial** *interface-path-id*
15. **ipv4 address** *ip-address*
16. **pvc** *dlci*
17. **service-policy** {**input** | **output**} *policy-map*
18. **fragment end-to-end** *fragment-size*
19. **fragment-counter**
20. **exit**
21. **exit**
22. **exit**
23. **end** or **commit**
24. **exit**
25. **show frame-relay pvc** [ **dlci** | **interface** | **location** ]

## DETAILED STEPS

| | Command or Action | Purpose |
|---|---|---|
| **Step 1** | **config**<br>**Example:**<br>`RP/0/RSP0/CPU0:router# config` | Enters global configuration mode. |
| **Step 2** | **controller t3** *interface-path-id*<br>**Example:**<br>`RP/0/RSP0/CPU0:router(config)# controller t3 0/1/0/0` | Specifies the T3 controller name in the *rack/slot/module/port* notation and enters T3 configuration mode. |
| **Step 3** | **mode** *type*<br>**Example:**<br>`RP/0/RSP0/CPU0:router(config-t3)# mode t1` | Configures the type of multilinks to channelize; for example, 28 T1s. |
| **Step 4** | **clock source** {**internal** | **line**}<br>**Example:** | (Optional) Sets the clocking for individual E3 links. |

| | Command or Action | Purpose |
|---|---|---|
| | `RP/0/RSP0/CPU0:router(config-t3)# clock source internal` | **Note** • The default clock source is **internal**.<br>• When configuring clocking on a serial link, you must configure one end to be **internal**, and the other end to be **line**. If you configure **internal** clocking on both ends of a connection, framing slips occur. If you configure **line** clocking on both ends of a connection, the line does not come up. |
| **Step 5** | **exit**<br>**Example:**<br>`RP/0/RSP0/CPU0:router(config-t3)# exit` | Exits T3/E3 or T1/E1 controller configuration mode. |
| **Step 6** | **controller t1** *interface-path-id*<br>**Example:**<br>`RP/0/RSP0/CPU0:router(config)# controller t1 0/1/0/0/0` | Enters T1 configuration mode. |
| **Step 7** | **channel-group** *channel-group-number*<br>**Example:**<br>`RP/0/RSP0/CPU0:router(config-t1)# channel-group 0` | Creates a T1 channel group and enters channel group configuration mode for that channel group. |
| **Step 8** | **timeslots** *range*<br>RP/0/RSP0/CPU0:router(config-t1-channel_group)# timeslots 1-24 | Associates one or more DS0 time slots to a channel group and creates an associated serial subinterface on that channel group.<br>• Range is from 1 to 24 time slots.<br>• You can assign all 24 time slots to a single channel group, or you can divide the time slots among several channel groups.<br>**Note** • Each individual T1 controller supports a total of 24 DS0 time slots. |
| **Step 9** | **exit**<br>**Example:**<br>`RP/0/RSP0/CPU0:router(config-t1-channel_group)# exit` | Exits channel group configuration mode. |
| **Step 10** | **exit**<br>**Example:** | Exits T1 configuration mode. |

| | Command or Action | Purpose |
|---|---|---|
| | `RP/0/RSP0/CPU0:router(config-t1)# exit` | |
| **Step 11** | **interface serial** *interface-path-id*<br>**Example:**<br>`RP/0/RSP0/CPU0:router(config)# interface serial 0/1/0/0/0/0:0` | Specifies the complete interface number with the *rack/slot/module/port/T3Num/T1num:instance* notation. |
| **Step 12** | **encapsulation frame-relay**<br>**Example:**<br>`RP/0/RSP0/CPU0:Router(config-if)# encapsulation frame-relay` | Specifies the Frame Relay encapsulation type. |
| **Step 13** | **exit**<br>**Example:**<br>`RP/0/RSP0/CPU0:router(config-if)# exit` | Exits interface configuration mode. |
| **Step 14** | **interface serial** *interface-path-id*<br>**Example:**<br>`RP/0/RSP0/CPU0:router(config)# interface serial 1/0/0/0/0:0.1` | Specifies the complete subinterface number with the *rack/slot/module/port*[*/channel-num:channel-group-number*].*subinterface* notation. |
| **Step 15** | **ipv4 address** *ip-address*<br>**Example:**<br>`RP/0/RSP0/CPU0:router(config-subif)# ipv4 address 3.1.100.16 255.255.255.0` | Assigns an IP address and subnet mask to the interface in the format:<br>`A.B.C.D/prefix or A.B.C.D/mask` |
| **Step 16** | **pvc** *dlci*<br>**Example:**<br>`RP/0/RSP0/CPU0:router (config-subif)# pvc 100` | Creates a POS permanent virtual circuit (PVC) and enters Frame Relay PVC configuration submode.<br>Replace *dlci* with a PVC identifier, in the range from 16 to 1007.<br>**Note** • Only one PVC is allowed per subinterface. |
| **Step 17** | **service-policy** {**input** \| **output**} *policy-map*<br>**Example:**<br>`RP/0/RSP0/CPU0:router(config-fr-vc)# service-policy output policy-mapA` | Attaches a policy map to an input subinterface or output subinterface. When attached, the policy map is used as the service policy for the subinterface. |

| | Command or Action | Purpose |
|---|---|---|
| | | **Note** • For effective FRF.12 functionality (interleave specifically), you should configure an egress service policy with priority.<br>• For information on creating and configuring policy maps, refer to *Cisco IOS XR Modular Quality of Service Configuration Guide*, |
| **Step 18** | **fragment end-to-end** *fragment-size*<br>**Example:**<br>`RP/0/RSP0/CPU0:router(config-fr-vc)# fragment end-to-end 100` | (Optional) Enables fragmentation of Frame Relay frames on an interface and specifies the size (in bytes) of the payload from the original frame that will go into each fragment. This number excludes the Frame Relay header of the original frame.<br>Valid values are from 64 to 512, depending on your hardware. |
| **Step 19** | **fragment-counter**<br>**Example:**<br>`RP/0/0/CPU0:router(config-fr-vc)# fragment-counter` | (Optional) Enables fragmentation counters for a Frame Relay subinterface and PVC. |
| **Step 20** | **exit**<br>**Example:**<br>`RP/0/RSP0/CPU0:router(config-fr-vc)# exit` | Exits the Frame-Relay virtual circuit mode. |
| **Step 21** | **exit**<br>**Example:**<br>`RP/0/RSP0/CPU0:router(config-subif)# exit` | Exits the subinterface configuration mode. |
| **Step 22** | **exit**<br>**Example:**<br>`RP/0/RSP0/CPU0:router(config-if)# exit` | Exits interface configuration mode. |
| **Step 23** | **end** or **commit**<br>**Example:**<br>`RP/0/RSP0/CPU0:router(config-if)# end`<br>or<br>`RP/0/RSP0/CPU0:router(config-if)# commit` | Saves configuration changes.<br>• When you issue the **end** command, the system prompts you to commit changes:<br>`Uncommitted changes found, commit them before exiting(yes/no/cancel)? [cancel]:` |

| | Command or Action | Purpose |
|---|---|---|
| | | • Entering **yes** saves configuration changes to the running configuration file, exits the configuration session, and returns the router to EXEC mode.<br>• Entering **no** exits the configuration session and returns the router to EXEC mode without committing the configuration changes.<br>• Entering **cancel** leaves the router in the current configuration session without exiting or committing the configuration changes.<br>• Use the **commit** command to save the configuration changes to the running configuration file and remain within the configuration session. |
| **Step 24** | **exit**<br>**Example:**<br>`RP/0/RSP0/CPU0:router(config)# exit` | Exits global configuration mode. |
| **Step 25** | **show frame-relay pvc** [ **dlci** \| **interface** \| **location** ]<br>**Example:**<br>`RP/0/RSP0/CPU0:router# show frame-relay pvc 100` | Displays the information for the specified PVC DLCI, interface, or location. |

# Configuration Examples for Frame Relay

This section provides the following configuration examples:

## Optional Frame Relay Parameters: Example

This example shows how to bring up and configure a POS interface with Frame Relay encapsulation. In this example, the user modifies the default Frame Relay configuration so that the interface supports ANSI T1.617a-1994 Annex D LMI on DCE.

```
RP/0/RSP0/CPU0:router# configure
RP/0/RSP0/CPU0:router(config)# interface POS 0/3/0/0
RP/0/RSP0/CPU0:router(config-if)# encapsulation frame-relay IETF
RP/0/RSP0/CPU0:router(config-if)# frame-relay intf-type dce
RP/0/RSP0/CPU0:router(config-if)# frame-relay lmi-type ansi
RP/0/RSP0/CPU0:router(config-if)# no shutdown
RP/0/RSP0/CPU0:router(config-if)# end

Uncommitted changes found, commit them? [yes]: yes

RP/0/RSP0/CPU0:router# configure
```

```
RP/0/RSP0RP0/CPU0:router (config)# interface pos 0/3/0/0.10 point-to-point

RP/0/RSP0/CPU0:router (config-subif)#ipv4 address 10.46.8.6/24

RP/0/RSP0RP0/CPU0:router (config-subif)# pvc 20

RP/0/RSP0RP0/CPU0:router (config-fr-vc)# encap ietf

RP/0/RSP0RP0/CPU0:router(config-subif)# commit
```

The following example shows how to disable LMI on a POS interface that has Frame Relay encapsulation configured:

```
RP/0/RSP0/CPU0:router# configure
RP/0/RSP0/CPU0:router(config)# interface
RP/0/RSP0/CPU0:router(config)# interface pos 0/3/0/0
RP/0/RSP0/CPU0:router(config-if)# frame-relay lmi disable
RP/0/RSP0/CPU0:router(config-if)# end

Uncommitted changes found, commit them? [yes]: yes
```

The following example shows how to reenable LMI on a serial interface:

```
RP/0/RSP0/CPU0:router# configure
RP/0/RSP0/CPU0:router(config)# interface
RP/0/RSP0/CPU0:router(config)# interface serial 0/3/0/0
RP/0/RSP0/CPU0:router(config-if)# no frame-relay lmi disable
RP/0/RSP0/CPU0:router(config-if)# end

Uncommitted changes found, commit them? [yes]: yes
```

The following example shows how to display Frame Relay statistics for LMI on all interfaces:

```
RP/0/RSP0/CPU0:router# show frame-relay lmi

LMI Statistics for interface POS0/1/0/0/ (Frame Relay DCE) LMI TYPE = ANSI
Invalid Unnumbered Info 0             Invalid Prot Disc 0
Invalid Dummy Call Ref 0              Invalid Msg Type 0
Invalid Status Message 0              Invalid Lock Shift 9
Invalid Information ID 0              Invalid Report IE Len 0
Invalid Report Request 0              Invalid Keep IE Len 0
Num Status Enq. Rcvd 9444             Num Status Msgs Sent 9444
Num Full Status Sent 1578             Num St Enq. Timeouts 41
Num Link Timeouts 7

LMI Statistics for interface POS0/1/0/1/ (Frame Relay DCE) LMI TYPE = CISCO
Invalid Unnumbered Info 0             Invalid Prot Disc 0
Invalid Dummy Call Ref 0              Invalid Msg Type 0
Invalid Status Message 0              Invalid Lock Shift 0
Invalid Information ID 0              Invalid Report IE Len 0
Invalid Report Request 0              Invalid Keep IE Len 0
Num Status Enq. Rcvd 9481             Num Status Msgs Sent 9481
Num Full Status Sent 1588             Num St Enq. Timeouts 16
Num Link Timeouts 4
```

The following example shows how to create a serial subinterface with a PVC on the main serial interface:

```
RP/0/RSP0/CPU0:router# configure
RP/0/RSP0/CPU0:router(config)# interface serial 0/3/0/0/0:0.10 point-to-point
RP/0/RSP0/CPU0:router (config-subif)#ipv4 address 10.46.8.6/24
RP/0/RSP0/CPU0:router (config-subif)# pvc 20
RP/0/RSP0/CPU0:router (config-fr-vc)# encapsulation ietf
RP/0/RSP0/CPU0:router(config-subif)# commit
```

The following example shows how to display information about all PVCs configured on your system:

```
RP/0/RSP0/CPU0router# show frame-relay pvc

PVC Statistics for interface Serial0/3/2/0 (Frame Relay DCE)

              Active     Inactive      Deleted       Static
  Local          4           0            0             0
  Switched       0           0            0             0
  Dynamic        0           0            0             0

DLCI = 612, DLCI USAGE = LOCAL, ENCAP = CISCO, INHERIT = TRUE, PVC STATUS = ACTI
VE, INTERFACE = Serial0/3/2/0.1
  input pkts 0          output pkts 0           in bytes 0
  out bytes 0           dropped pkts 0          in FECN packets 0
  in BECN pkts 0        out FECN pkts 0         out BECN pkts 0
  in DE pkts 0          out DE pkts 0
  out bcast pkts 0      out bcast bytes 0
  pvc create time 00:00:00      last time pvc status changed 00:00:00

DLCI = 613, DLCI USAGE = LOCAL, ENCAP = CISCO, INHERIT = TRUE, PVC STATUS = ACTI
VE, INTERFACE = Serial0/3/2/0.2
  input pkts 0          output pkts 0           in bytes 0
  out bytes 0           dropped pkts 0          in FECN packets 0
  in BECN pkts 0        out FECN pkts 0         out BECN pkts 0
  in DE pkts 0          out DE pkts 0
  out bcast pkts 0      out bcast bytes 0
  pvc create time 00:00:00      last time pvc status changed 00:00:00

DLCI = 614, DLCI USAGE = LOCAL, ENCAP = CISCO, INHERIT = TRUE, PVC STATUS = ACTI
VE, INTERFACE = Serial0/3/2/0.3
  input pkts 0          output pkts 0           in bytes 0
  out bytes 0           dropped pkts 0          in FECN packets 0
  in BECN pkts 0        out FECN pkts 0         out BECN pkts 0
  in DE pkts 0          out DE pkts 0
  out bcast pkts 0      out bcast bytes 0
  pvc create time 00:00:00      last time pvc status changed 00:00:00

DLCI = 615, DLCI USAGE = LOCAL, ENCAP = CISCO, INHERIT = TRUE, PVC STATUS = ACTI
VE, INTERFACE = Serial0/3/2/0.4
  input pkts 0          output pkts 0           in bytes 0
  out bytes 0           dropped pkts 0          in FECN packets 0
  in BECN pkts 0        out FECN pkts 0         out BECN pkts 0
  in DE pkts 0          out DE pkts 0
  out bcast pkts 0      out bcast bytes 0
  pvc create time 00:00:00      last time pvc status changed 00:00:00
```

The following example shows how to modify LMI polling options on PVCs configured for a DTE, and then use the **show frame-relay lmi** and **show frame-relay lmi-info** commands to display information for monitoring and troubleshooting the interface:

```
RP/0/RSP0/CPU0:router# configure
RP/0/RSP0/CPU0:router(config)# interface pos 0/3/0/0
RP/0/RSP0/CPU0:router(config-if)# frame-relay lmi-n391dte 10
RP/0/RSP0/CPU0:router(config-if)# frame-relay lmi-n391dte 5
RP/0/RSP0/CPU0:router(config-if)# frame-relay lmi-t391dte 15

RP/0/RSP0RP0/CPU0:router(config-subif)# commit

RP/0/RSP0/CPU0:router# show frame-relay lmi interface pos 0/3/0/0

LMI Statistics for interface pos 0/3/0/0 (Frame Relay DTE) LMI TYPE = ANSI
Invalid Unnumbered Info 0             Invalid Prot Disc 0
Invalid Dummy Call Ref 0              Invalid Msg Type 0
Invalid Status Message 0              Invalid Lock Shift 9
Invalid Information ID 0              Invalid Report IE Len 0
Invalid Report Request 0              Invalid Keep IE Len 0
Num Status Enq. Rcvd 9444             Num Status Msgs Sent 9444
Num Full Status Sent 1578             Num St Enq. Timeouts 41
Num Link Timeouts 7

RP/0/RSP0/CPU0:router# show frame-relay lmi-info interface pos 0/3/0/0

LMI IDB Info for interface POS0/3/0/0
  ifhandle:             0x6176840
  Interface type:       DTE
  Interface state:      UP
  Line Protocol:        UP
  LMI type (cnf/oper):  AUTO/CISCO
  LMI type autosense:   OFF
  Interface MTU:        1504
  -------------- DTE -------------
  T391:                 15s
  N391: (cnf/oper):     5/5
  N392: (cnf/oper):     3/0
  N393:                 4
  My seq#:              83
  My seq# seen:         83
  Your seq# seen:       82
  -------------- DCE -------------
  T392:                 15s
  N392: (cnf/oper):     3/0
  N393:                 4
  My seq#:              0
  My seq# seen:         0
  Your seq# seen:       0
```

# Multilink Frame Relay: Example

The following example shows how to configure multilink Frame Relay with serial interfaces:

```
RP/0/RSP0/CPU0:router# config
RP/0/RSP0/CPU0:router(config)# controller MgmtMultilink 0/3/1/0
RP/0/RSP0/CPU0:router(config-mgmtmultilink)# bundle 100
RP/0/RSP0/CPU0:router(config-mgmtmultilink)# exit

RP/0/RSP0/CPU0:router(config)# controller T3 0/3/1/0
RP/0/RSP0/CPU0:router(config-t3)# mode t1
```

```
RP/0/RSP0/CPU0:router(config-t3)# clock source internal
RP/0/RSP0/CPU0:router(config-t3)# exit

RP/0/RSP0/CPU0:router(config)# controller T1 0/3/1/0/0
RP/0/RSP0/CPU0:router(config-t1)# channel-group 0
RP/0/RSP0/CPU0:router(config-t1-channel_group)# timeslots 1-24
RP/0/RSP0/CPU0:router(config-t1-channel_group)#  exit
RP/0/RSP0/CPU0:router(config-t1-channel_group)# exit
RP/0/RSP0/CPU0:router(config-t1)# exit

RP/0/RSP0/CPU0:router(config)# interface Multilink 0/3/1/0/100
RP/0/RSP0/CPU0:router(config-if)# encapsulation frame-relay
RP/0/RSP0/CPU0:router(config-if)# exit

RP/0/RSP0/CPU0:router(config)# interface Multilink 0/3/1/0/100.16 point-to-point
RP/0/RSP0/CPU0:router(config-subif)# ipv4 address 3.1.100.16 255.255.255.0
RP/0/RSP0/CPU0:router(config-subif)# pvc 16
RP/0/RSP0/CPU0:router(config-fr-vc)# service-policy output policy-mapA
RP/0/RSP0/CPU0:router(config-fr-vc)# exit
RP/0/RSP0/CPU0:router(config-subif)# exit

RP/0/RSP0/CPU0:router(config)# interface Serial 0/3/1/0/0:0
RP/0/RSP0/CPU0:router(config-if)# encapsulation mfr
RP/0/RSP0/CPU0:router(config-if)# multilink group 100
RP/0/RSP0/CPU0:router(config-if)# frame-relay multilink lid sj1
RP/0/RSP0/CPU0:router(config-if)# frame-relay multilink ack 5
RP/0/RSP0/CPU0:router(config-if)# frame-relay multilink hello 60
RP/0/RSP0/CPU0:router(config-if)# frame-relay multilink retry 2
RP/0/RSP0/CPU0:router(config-if)# exit
RP/0/RSP0/CPU0:router(config)#
```

# End-to-End Fragmentation: Example

This example shows how to configure FRF.12 end-to-end fragmentation on a channelized Frame Relay serial interface:

```
RP/0/RSP0/CPU0:router# config
RP/0/RSP0/CPU0:router(config)# controller T30/3/1/0
RP/0/RSP0/CPU0:router(config-t3)# mode t1
RP/0/RSP0/CPU0:router(config-t3)# clock source internal
RP/0/RSP0/CPU0:router(config-t3)# exit
RP/0/RSP0/CPU0:router(config-t3)# controller T10/3/1/0/0
RP/0/RSP0/CPU0:router(config-t1)# channel-group 0
RP/0/RSP0/CPU0:router(config-t1-channel_group)#  timeslots 1-24
RP/0/RSP0/CPU0:router(config-t1-channel_group)# exit
RP/0/RSP0/CPU0:router(config-t1-channel_group)# interface Serial 0/3/1/0/0:0
RP/0/RSP0/CPU0:router(config-if)# encapsulation frame-relay
RP/0/RSP0/CPU0:router(config-if)# exit
RP/0/RSP0/CPU0:router(config-if)# interface Serial 0/3/1/0/0:0.100 point-to-point
RP/0/RSP0/CPU0:router(config-subif)# ipv4 address 3.1.1.1 255.255.255.0
RP/0/RSP0/CPU0:router(config-subif)#  pvc 100
RP/0/RSP0/CPU0:router(config-fr-vc)#  service-policy output LFI
RP/0/RSP0/CPU0:router(config-fr-vc)# fragment end-to-end 256
fragment-counter
```

CHAPTER 19

# Configuring PPP

This module describes the configuration of Point-to-Point Protocol (PPP) on POS and serial interfaces on the Cisco ASR 9000 Series Router.

### Feature History for Configuring PPP Interfaces

| Release | Modification |
|---|---|
| Release 3.9.0 | PPP and ICSSO for PPP and MLPPP were introduced on the Cisco ASR 9000 Series Router. |
| Release 3.9.1 | Support for T3 Channelized SONET was added. |
| Release 4.0.0 | Support for the following features was added for the 2-Port Channelized OC-12c/DS0 SPA:<br>• IPHC over PPP, MLPPP, and MLPPP/LFI<br>• NxDS0 serial interfaces<br>Support for PPP was introduced on the following SPAs:<br>• 1-Port Channelized OC-48/STM-16 SPA<br>• 1-Port OC-192c/STM-64 POS/RPR XFP SPA<br>• 2-Port OC-48c/STM-16 POS/RPR SPA<br>• 8-Port OC-12c/STM-4 POS SPA |
| Release 4.0.1 | Support for PPP was added for the following SPAs on the Cisco ASR 9000 Series Router:<br>• Cisco 1-Port Channelized OC-3/STM-1 SPA (also supports MLPPP)<br>• Cisco 2-Port and 4-Port Clear Channel T3/E3 SPA<br>• Cisco 4-Port OC-3c/STM-1 SPA<br>• Cisco 8-Port OC-3c/STM-1 SPA |

| | |
|---|---|
| Release 4.1.0 | Support for the Noise Attribute was added for PPP to remove links on MLPPP bundles when Link Noise Monitoring (LNM) thresholds are crossed on a link.<br>Support for PPP, including MLPPP support on T1/E1 channels, was introduced on the following SPAs:<br>• Cisco 4-Port Channelized T3 SPA<br>• Cisco 8-Port Channelized T1/E1 SPA |


- Prerequisites for Configuring PPP, on page 658
- Information About PPP, on page 658
- How to Configure PPP, on page 666
- Configuration Examples for PPP, on page 697
- ICSSO for PPP and MLPPP Configuration: Examples, on page 699


# Prerequisites for Configuring PPP

You must be in a user group associated with a task group that includes the proper task IDs. The command reference guides include the task IDs required for each command. If you suspect user group assignment is preventing you from using a command, contact your AAA administrator for assistance.

Before you can configure PPP authentication on a POS or serial interface, be sure that the following tasks and conditions are met:

- Your hardware must support POS or serial interfaces.
- You have enabled PPP encapsulation on your interface with the **encap ppp** command, as described in the appropriate module:
  - To enable PPP encapsulation on a POS interface, see the Configuring POS Interfaces, on page 563 module in this manual.
  - To enable PPP encapsulation on a serial interface, see the Configuring Serial Interfaces, on page 591 module in this manual.

# Information About PPP

To configure PPP and related features, you should understand the information in this section:

## PPP Authentication

When PPP authentication is configured on an interface, a host requires that the other host uniquely identify itself with a secure password before establishing a PPP connection. The password is unique and is known to both hosts.

PPP supports the following authentication protocols:

- Challenge-Handshake Authentication Protocol (CHAP)

- Microsoft extension to the CHAP protocol (MS-CHAP)
- Password Authentication Protocol (PAP).

When you first enable PPP on a POS or serial interface, no authentication is enabled on the interface until you configure a CHAP, MS-CHAP, or PAP secret password under that interface. Keep the following information in mind when configuring PPP on an interface:

- CHAP, MS-CHAP, and PAP can be configured on a single interface; however, only one authentication method is used at any one time. The order in which the authentication protocols are used is determined by the peer during the LCP negotiations. The first authentication method used is the one that is also supported by the peer.
- PAP is the least secure authentication protocol available on POS and serial interfaces. To ensure higher security for information that is sent over POS and serial interfaces, we recommend configuring CHAP or MS-CHAP authentication in addition to PAP authentication.
- Enabling or disabling PPP authentication does not effect the local router's willingness to authenticate itself to the remote device.
- The **ppp authentication** command is also used to specify the order in which CHAP, MS-CHAP, and PAP authentication is selected on the interface. You can enable CHAP, MS-CHAP, or PAP in any order. If you enable all three methods, the first method specified is requested during link negotiation. If the peer suggests using the second method, or refuses the first method, the second method is tried. Some remote devices support only one method. Base the order in which you specify methods on the remote device's ability to correctly negotiate the appropriate method and on the level of data line security you require. PAP usernames and passwords are sent as clear text strings, which can be intercepted and reused.

**Caution** If you use a *list-name* value that was not configured with the **aaa authentication ppp** command, your interface cannot authenticate the peer. For details on implementing the **aaa authentication** command with the **ppp** keyword, see the *Authentication, Authorization, and Accounting Commands on Cisco IOS XR Software* module of *Cisco IOS XR System Security Command Reference* and *Configuring AAA Services on Cisco IOS XR Software* module of the *Cisco IOS XR System Security Configuration Guide*.

## PAP Authentication

PAP provides a simple method for a remote node to establish its identity using a two-way handshake. After a PPP link is established between two hosts, a username and password pair is repeatedly sent by the remote node across the link (in clear text) until authentication is acknowledged, or until the connection is terminated.

PAP is not a secure authentication protocol. Passwords are sent across the link in clear text and there is no protection from playback or trial-and-error attacks. The remote node is in control of the frequency and timing of the login attempts.

## CHAP Authentication

CHAP is defined in RFC 1994, and it verifies the identity of the peer by means of a three-way handshake. The steps that follow provide a general overview of the CHAP process:

### SUMMARY STEPS

1. The CHAP authenticator sends a challenge message to the peer.
2. The peer responds with a value calculated through a one-way hash function.
3. The authenticator checks the response against its own calculation of the expected hash value. If the values match, then the authentication is successful. If the values do not match, then the connection is terminated.

### DETAILED STEPS

**Step 1** The CHAP authenticator sends a challenge message to the peer.

**Step 2** The peer responds with a value calculated through a one-way hash function.

**Step 3** The authenticator checks the response against its own calculation of the expected hash value. If the values match, then the authentication is successful. If the values do not match, then the connection is terminated.

This authentication method depends on a CHAP password known only to the authenticator and the peer. The CHAP password is not sent over the link. Although the authentication is only one-way, you can negotiate CHAP in both directions, with the help of the same CHAP password set for mutual authentication.

**Note** For CHAP authentication to be valid, the CHAP password must be identical on both hosts.

## MS-CHAP Authentication

Microsoft Challenge Handshake Authentication Protocol (MS-CHAP) is the Microsoft version of CHAP and is an extension to RFC 1994. MS-CHAP follows the same authentication process used by CHAP. In this case, however, authentication occurs between a PC using Microsoft Windows NT or Microsoft Windows 95 and a Cisco router or access server acting as a network access server (NAS).

**Note** For MS-CHAP authentication to be valid, the MS-CHAP password must be identical on both hosts.

# Multilink PPP

Multilink Point-to-Point Protocol (MLPPP) provides a method for combining multiple physical links into one logical link. The implementation combines multiple PPP interfaces into one multilink interface. MLPPP performs the fragmenting, reassembling, and sequencing of datagrams across multiple PPP links.

Link Fragmentation and Interleaving (LFI) is designed for MLPPP interfaces and is required when integrating voice and data on low-speed interfaces.

Link Fragmentation and Interleaving (LFI) provides stability for delay-sensitive traffic, such as voice or video, traveling on the same circuit as data. Voice is susceptible to increased latency and jitter when the network processes large packets on low-speed interfaces. LFI reduces delay and jitter by fragmenting large datagrams and interleaving them with low-delay traffic packets.

*Figure 44: Link Fragmentation Interleave*

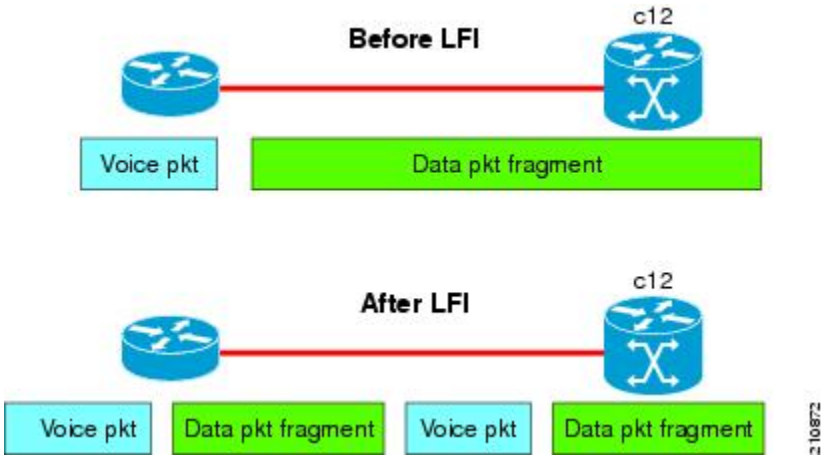


## MLPPP Feature Summary

MLPPP in Cisco IOS XR provides the same features that are supported on PPP Serial interfaces with the exception of QoS. It also provides the following additional features:

- Long sequence numbers (24-bit).
- Lost fragment detection timeout period of 1 second.
- Minimum-active-links configuration option.
- LCP echo request/reply support over multilink interface.
- Full T1 and E1 framed and unframed links.
- Support for the Cisco 2-Port Channelized OC-12c/DS0 SPA to set thresholds for noise errors on T1/E1 links that are used to signal the Noise Attribute to PPP for removal of an MLPPP bundle link. For more information about LNM, see the "Configuring Clear Channel T3/E3 Controllers and Channelized T3 Controllers on the Cisco ASR 9000 Series Router" module in the *Cisco ASR 9000 Series Aggregation Services Router Interface and Hardware Component Configuration Guide*.

## IPHC Over MLPPP

The 2-Port Channelized OC-12c/DS0 SPA supports IPHC over PPP, MLPPP, and MLPPP/LFI. For more information about IPHC and how to configure it, see the "Configuring Serial Interfaces on the Cisco ASR 9000 Series Router" module in the *Cisco ASR 9000 Series Aggregation Services Router Interface and Hardware Component Configuration Guide*.

# ICSSO for PPP and MLPPP

**Note** SR- and MR-APS is not supported on the Cisco 1-Port Channelized OC-48/STM-16 SPA.

Inter-Chassis Stateful Switchover (ICSSO) on the Cisco ASR 9000 Series Router provides features that maintain Point-to-Point Protocol (PPP) and Multilink PPP (MLPPP) sessions during a Multi-Router Automatic Protection Switching (MR-APS) switchover from the MR-APS Working router to the MR-APS Protect router.

ICSSO allows an MR-APS switchover to occur without the need for Link Control Protocol (LCP) or IP Control Protocol (IPCP) renegotiation between the new MR-APS active router and the remote PPP/MLPPP peer devices. The primary purpose of ICSSO is to minimize subscriber session and data loss during an MR-APS switchover.

ICSSO synchronizes the PPP and MLPPP state information on the active router with the state information on the backup router, and ensures that the backup router is ready to forward traffic immediately after an MR-APS switchover.

ICSSO works in conjunction with the following other software components:

## Multi-Router Automatic Protection Switching (MR-APS)

Multi-Router Automatic Protection Switching (MR-APS) is a Cisco feature that provides Layer 1 protection against facility and equipment failures through the configuration of a protection pair of SONET controllers located on two different routers. The redundant backup router is configured identically to the active router and is ready to forward traffic immediately upon an MR-APS switchover.

The protection pair communicates using Layer 1 (k1/k2) signalling bytes from the SONET downstream connection (as per Bellcore specification GR-253-CORE) and Layer 3 signaling messages using Protect Group Protocol (PGP). MR-APS detects many of the sources of failures that indirectly trigger an IP-FRR update to use backup routes.

In an MR-APS configuration, two interfaces, on different routers, are assigned the roles of Working interface or Protect interface. These roles are configured by the operator. Under normal conditions, the Working interface carries active traffic. If the Working interface fails, the Protect interface takes over the active traffic immediately with no loss of PPP traffic.

## Session State Redundancy Protocol (SSRP)

A pair of SONET controllers configured for MR-APS are part of a Session State Redundancy Protocol (SSRP) protection group. SSRP communicates interface and system state information between the Active and Standby routers. SSRP also serves as the keepalive protocol.

SSRP configuration associates a SONET controller with an inter-chassis redundancy group and enables MR-APS peer routers to synchronize PPP session states on each Active SONET controller.

PPP sessions can have one of three states:

- Active–A PPP session is in the Active state when the PPP session negotiation is complete, the associated route is installed, and the associated adjacency is created. PPP sessions in the Active state replicate data to their peers on the Standby router.
- Standby Up–A PPP session on the Standby router is in the Standby Up state when replicated state information is received from the Active router, the associated PPP route is installed, and the associated adjacency is created. PPP sessions in the Standby Up state are ready to forward traffic immediately after an MR-APS switchover.
- Standby Down–A PPP session on the Standby router is in the Standby Down state when the associated route is not installed and the adjacency is not created.

SSRP runs between the MR-APS peer routers and uses TCP/IP. One SSRP session runs on each pair of redundant SONET controllers, meaning multiple SSRP sessions can be running on a pair of MR-APS-redundant routers.

**Note** SSRP is not a redundancy control protocol, but is a state information synchronization protocol.

## Redundancy Group Manager (RG-MGR)

The Redundancy Group Manager (RG-MGR) configures the backup routes for the protected interface. The RG-MGR registers events on protected SONET controllers and provides the Routing Information Base (RIB) component with IP Fast Reroute (IP-FRR) updates.

## IP Fast Reroute (IP-FRR)

**Note** IP-FRR, when used with IC-SSO, is only supported with PPP encapsulation. It is not supported with HDLC encapsulation.

IP Fast Reroute (IP-FRR) provides extremely fast rerouting of PPP/MLPPP traffic after an MR-APS switchover.

IP-FRR controls the primary and backup routes. Each route is mapped in the Routing Information Base (RIB), and IP-FRR controls which backup path is used to forward traffic after an MR-APS switchover.

An MR-APS switchover triggers an IP-FRR update, which activates the backup routes on the protection SONET controller. When the working SONET controller is restored, another IP-FRR update is triggered, and traffic is rerouted to the primary route.

For more information about IP-FRR, refer to the “Implementing MPLS Traffic Engineering on Cisco IOS XR Software” module in the *Cisco IOS XR MPLS Configuration Guide*.

## VPN Routing And Forwarding (VRF)

ICSSO can be used with VPN routing and forwarding (VRF). Customers who wish to isolate traffic streams with different service types can do so using VRF technology. VRF allows the user to create and maintain separate routing and forwarding databases. See VRF on Multilink Configuration for Use with ICSSO: Example and VRF on Ethernet Configuration for Use with ICSSO: Example. For more information on configuring VRF, refer to the *Cisco ASR 9000 Series Aggregation Services Router Routing Configuration Guide*.

## Open Shortest Path First (OSPF)

Aggregation routers that terminate PPP sessions to a set of remote peers, must advertise their availability on the network using Open Shortest Path First (OSPF). OSPF is required to advertise the availability of remote PPP peers to the ICSSO peer router. See OSPF Configuration for Use with ICSSO: Example. For more information on configuring OSPF, refer to the *Cisco ASR 9000 Series Aggregation Services Router Routing Configuration Guide*.

## ICSSO Configuration Overview

ICSSO is configured as follows:

- Configure MR-APS
- Configure SSRP profile
- Configure SSRP groups
- Configure serial interfaces with PPP encapsulation
- Configure multilink interfaces
- Verify ICSSO configuration

The Configuring ICSSO for PPP and MLPPP of this module provides step procedures for configuring ICSSO.

The ICSSO for PPP and MLPPP Configuration: Examples gives specific examples for configuring ICSSO and related components.

# Multiclass MLPPP with QoS

Multiclass Multilink Point-to-Point Protocol (MLPPP) can be utilized with Quality of Service (QoS) and configured using the **encap-sequence** command under a class in a policy map.

The **encap-sequence** command specifies the MLPPP MCMP class ID for the packets in an MQC defined class.

The valid values for the **encap-sequence** ID number are **none**, 0, 1, 2, or 3. The **none** value is applicable only when the **priority level** is 1 and indicates that there is no MLPPP encapsulation. The values 1, 2, or 3 can be used with priority 1 or 2 classes or other classes with queuing actions. An **encap-sequence** ID number of zero (0) is reserved for the default class and cannot be specified in any other classes.

**Note** The **encap-sequence** ID numbers must be configured in numeric order. For example, you cannot assign an ID number of 3 unless you have already assigned 1 and 2.

The number of **encap-sequence** ID numbers must be less than the number of MLPPP classes that are negotiated between the peers via the Multilink header. The user must ensure that the configuration is consistent as the system does not verify this.

The **ppp multilink multiclass remote apply** command provides a way to ensure this. You can ensure that the number of classes using an **encap-sequence** ID number (including the default of 0) is less than the *min-number* value in the **ppp multilink multiclass remote apply** command. For example, if the min-number value in the ppp multilink multiclass remote apply command is 4, you can only have 3 or less classes with encap-sequence ID numbers

The QoS policy validates the following conditions. If these conditions are not met, the policy is rejected:

- The **encap-sequence** ID number is within the allowed values of 1 to 3.
- When **encap-sequence** is configured for any class in a policy map, all classes in that policy map with **priority level 1** must also contain an **encap-sequence** ID number.
- The **encap-sequence none** configuration is restricted to classes with **priority level** 1.
- The class-default does not contain an **encap-sequence** configuration.
- Only classes containing a queuing action have the **encap-sequence** configuration.

**Note** Classes that share the same **encap-sequence** ID number must have the same priority.

A QoS policy map is configured as follows:

```
config
 policy-map type qos policy-name
  class class-name
   action
   action
   action
. . .
```

The following example shows how to configure a policy map for MLPPP:

```
config
 policy-map foo
  class ip-prec-1
   encap-sequence none
   police rate percent 10
   priority level 1
 !
  class ip-prec-2
   encap-sequence 1
   shape average percent 80
 !
  class ip-prec-3
   encap-sequence 1
   bandwidth percent 10
 !
  class class-default
 !
 end-policy-map
 !
```

For complete information on configuring QoS and QoS commands, refer to the *Cisco ASR 9000 Series Aggregation Services Routers Modular Quality of Service Configuration Guide* and the *Cisco ASR 9000 Series Aggregation Services Routers Modular Quality of Service Command Reference*.

# T3 SONET Channels

The Cisco ASR 9000 Series Router supports T3 channelized SONET on the following hardware:

- SIP 700 SPA Interface Processor
- 1-Port Channelized OC-3/STM-1 SPA
- 2-Port Channelized OC-12c/DS0 SPA
- 1-Port Channelized OC-48/STM-16 SPA

Channelized SONET provides the ability to transport multiple T3 channels over the same physical link.

For more detailed information about configuring channelized SONET, T3 and T1 controllers, serial interfaces, and SONET APS, see the following related modules:

- Configuring Channelized SONET/SDH, on page 391
- Configuring Clear Channel SONET Controllers, on page 479
- Configuring Clear Channel T3/E3 Controllers and Channelized T3 and T1/E1 Controllers, on page 495
- Configuring Serial Interfaces, on page 591

# How to Configure PPP

This section includes the following procedures:

## Modifying the Default PPP Configuration

When you first enable PPP on an interface, the following default configuration applies:

- The interface resets itself immediately after an authentication failure.
- The maximum number of configuration requests without response permitted before all requests are stopped is 10.
- The maximum number of consecutive Configure Negative Acknowledgments (CONFNAKs) permitted before terminating a negotiation is 5.
- The maximum number of terminate requests (TermReqs) without response permitted before the Link Control Protocol (LCP) or Network Control Protocol (NCP) is closed is 2.
- Maximum time to wait for a response to an authentication packet is 10 seconds.
- Maximum time to wait for a response during PPP negotiation is 3 seconds.

This task explains how to modify the basic PPP configuration on serial and POS interfaces that have PPP encapsulation enabled. The commands in this task apply to all authentication types supported by PPP (CHAP, MS-CHAP, and PAP).

### Before you begin

You must enable PPP encapsulation on the interface with the **encapsulation ppp** command.

- To enable PPP encapsulation on a POS interface, see the Configuring POS Interfaces, on page 563 module in this manual.
- To enable PPP encapsulation on an interface, see the Configuring Serial Interfaces, on page 591 module in this manual.

### SUMMARY STEPS

1. **configure**
2. **interface** *type interface-path-id*
3. **ppp max-bad-auth** *retries*
4. **ppp max-configure** *retries*
5. **ppp max-failure** *retries*

6. **ppp max-terminate** *number*
7. **ppp timeout authentication** *seconds*
8. **ppp timeout retry** *seconds*
9. **end** or **commit**
10. **show ppp interfaces** {*type interface-path-id* | **all** | **brief** {*type interface-path-id* | **all** | **location** *node-id*} | **detail** {*type interface-path-id* | **all** | **location** *node-id*} | **location** *node-id*}

## DETAILED STEPS

| | Command or Action | Purpose |
|---|---|---|
| **Step 1** | **configure**<br>**Example:**<br>`RP/0/RSP0/CPU0:router# configure` | Enters global configuration mode. |
| **Step 2** | **interface** *type interface-path-id*<br>**Example:**<br>`RP/0/RSP0/CPU0:router(config)# interface serial 0/4/0/1` | Enters interface configuration mode. |
| **Step 3** | **ppp max-bad-auth** *retries*<br>**Example:**<br>`RP/0/RSP0/CPU0:router(config-if)# ppp max-bad-auth 3` | (Optional) Configures the number of authentication retries allowed on an interface after a PPP authentication failure.<br>• If you do not specify the number of authentication retries allowed, the router resets itself immediately after an authentication failure.<br>• Replace the *retries* argument with number of retries after which the interface is to reset itself, in the range from 0 through 10.<br>• The default is 0 retries.<br>• The **ppp max-bad-auth** command applies to any interface on which PPP encapsulation is enabled. |
| **Step 4** | **ppp max-configure** *retries*<br>**Example:**<br>`RP/0/RSP0/CPU0:router(config-if)# ppp max-configure 4` | (Optional) Specifies the maximum number of configure requests to attempt (without response) before the requests are stopped.<br>• Replace the *retries* argument with the maximum number of configure requests retries, in the range from 4 through 20.<br>• The default maximum number of configure requests is 10.<br>• If a configure request message receives a reply before the maximum number of configure requests are sent, further configure requests are abandoned. |

| | Command or Action | Purpose |
|---|---|---|
| **Step 5** | **ppp max-failure** *retries*<br>**Example:**<br>`RP/0/RSP0/CPU0:router(config-if)# ppp max-failure 3` | (Optional) Configures the maximum number of consecutive Configure Negative Acknowledgments (CONFNAKs) permitted before a negotiation is terminated.<br>• Replace the *retries* argument with the maximum number of CONFNAKs to permit before terminating a negotiation, in the range from 2 through 10.<br>• The default maximum number of CONFNAKs is 5. |
| **Step 6** | **ppp max-terminate** *number*<br>**Example:**<br>`RP/0/RSP0/CPU0:router(config-if)# ppp max-terminate 5` | (Optional) Configures the maximum number of terminate requests (TermReqs) to send without reply before the Link Control Protocol (LCP) or Network Control Protocol (NCP) is closed.<br>• Replace the *number* argument with the maximum number of TermReqs to send without reply before closing down the LCP or NCP. Range is from 2 to 10.<br>• The default maximum number of TermReqs is 2. |
| **Step 7** | **ppp timeout authentication** *seconds*<br>**Example:**<br>`RP/0/RSP0/CPU0:router(config-if)# ppp timeout authentication 20` | (Optional) Sets PPP authentication timeout parameters.<br>• Replace the *seconds* argument with the maximum time, in seconds, to wait for a response to an authentication packet. Range is from 3 to 30 seconds.<br>• The default authentication time is 10 seconds, which should allow time for a remote router to authenticate and authorize the connection and provide a response. However, it is also possible that it will take much less time than 10 seconds. In such cases, use the **ppp timeout authentication** command to lower the timeout period to improve connection times in the event that an authentication response is lost. |
| **Step 8** | **ppp timeout retry** *seconds*<br>**Example:**<br>`RP/0/RSP0/CPU0:router(config-if)# ppp timeout retry 8` | (Optional) Sets PPP timeout retry parameters.<br>• Replace the *seconds* argument with the maximum time, in seconds, to wait for a response during PPP negotiation. Range is from 1 to 10 seconds.<br>• The default is 3 seconds. |
| **Step 9** | **end** or **commit**<br>**Example:**<br>`RP/0/RSP0/CPU0:router(config-if)# end`<br>or | Saves configuration changes.<br>• When you issue the **end** command, the system prompts you to commit changes:<br>`Uncommitted changes found, commit them before exiting(yes/no/cancel)? [cancel]:` |

| | Command or Action | Purpose |
|---|---|---|
| | `RP/0/RSP0/CPU0:router(config-if)# commit` | - Entering **yes** saves configuration changes to the running configuration file, exits the configuration session, and returns the router to EXEC mode.<br>- Entering **no** exits the configuration session and returns the router to EXEC mode without committing the configuration changes.<br>- Entering **cancel** leaves the router in the current configuration session without exiting or committing the configuration changes.<br>• Use the **commit** command to save the configuration changes to the running configuration file and remain within the configuration session. |
| **Step 10** | **show ppp interfaces** {*type interface-path-id* \| **all** \| **brief** {*type interface-path-id* \| **all** \| **location** *node-id*} \| **detail** {*type interface-path-id* \| **all** \| **location** *node-id*} \| **location** *node-id*}<br>**Example:**<br>`RP/0/RSP0/CPU0:router# show ppp interfaces serial 0/2/0/0` | Verifies the PPP configuration for an interface or for all interfaces that have PPP encapsulation enabled. |

# Configuring PPP Authentication

This section contains the following procedures:

## Enabling PAP, CHAP, and MS-CHAP Authentication

This task explains how to enable PAP, CHAP, and MS-CHAP authentication on a serial or POS interface.

### Before you begin

You must enable PPP encapsulation on the interface with the **encapsulation ppp** command, as described in the following modules:

- To enable PPP encapsulation on a POS interface, see the Configuring POS Interfaces, on page 563 module in this manual.
- To enable PPP encapsulation on an interface, see the Configuring Serial Interfaces, on page 591 module in this manual.

### SUMMARY STEPS

1. **configure**
2. **interface** *type interface-path-id*
3. **ppp authentication** *protocol* [*protocol* [*protocol*]] [*list-name* | **default**]
4. **end** or **commit**

5. **show ppp interfaces** {*type interface-path-id* | **all** | **brief** {*type interface-path-id* | **all** | **location** *node-id*} | **detail** {*type interface-path-id* | **all** | **location** *node-id*} | **location** *node-id*}

## DETAILED STEPS

| | Command or Action | Purpose |
|---|---|---|
| **Step 1** | **configure**<br>**Example:**<br>`RP/0/RSP0/CPU0:router# configure` | Enters global configuration mode. |
| **Step 2** | **interface** *type interface-path-id*<br>**Example:**<br>`RP/0/RSP0/CPU0:router(config)# interface serial 0/4/0/1` | Enters interface configuration mode. |
| **Step 3** | **ppp authentication** *protocol* [*protocol* [*protocol*]] [*list-name* \| **default**]<br>**Example:**<br>`RP/0/RSP0/CPU0:router(config-if)# ppp authentication chap pap MIS-access` | Enables CHAP, MS-CHAP, or PAP on an interface, and specifies the order in which CHAP, MS-CHAP, and PAP authentication is selected on the interface.<br>• Replace the *protocol* argument with **pap**, **chap**, **or ms-chap**.<br>• Replace the *list name* argument with the name of a list of methods of authentication to use. To create a list, use the **aaa authentication ppp** command, as described in the *Authentication, Authorization, and Accounting Commands on Cisco IOS XR Software* module of the *Cisco IOS XR System Security Command Reference*.<br>• If no list name is specified, the system uses the default. The default list is designated with the **aaa authentication ppp** command, as described in the *Authentication, Authorization, and Accounting Commands on Cisco IOS XR Software* module of the *Cisco IOS XR System Security Command Reference*. |
| **Step 4** | **end** or **commit**<br>**Example:**<br>`RP/0/RSP0/CPU0:router(config-if)# end`<br>or<br>`RP/0/RSP0/CPU0:router(config-if)# commit` | Saves configuration changes.<br>• When you issue the **end** command, the system prompts you to commit changes:<br>`Uncommitted changes found, commit them before exiting(yes/no/cancel)? [cancel]:`<br>- Entering **yes** saves configuration changes to the running configuration file, exits the configuration session, and returns the router to EXEC mode. |

| | Command or Action | Purpose |
|---|---|---|
| | | - Entering **no** exits the configuration session and returns the router to EXEC mode without committing the configuration changes.<br>- Entering **cancel** leaves the router in the current configuration session without exiting or committing the configuration changes.<br>• Use the **commit** command to save the configuration changes to the running configuration file and remain within the configuration session. |
| **Step 5** | **show ppp interfaces** {*type interface-path-id* \| **all** \| **brief** {*type interface-path-id* \| **all** \| **location** *node-id*} \| **detail** {*type interface-path-id* \| **all** \| **location** *node-id*} \| **location** *node-id*}<br>**Example:**<br>`RP/0/RSP0/CPU0:router# show ppp interfaces serial 0/2/0/0` | Displays PPP state information for an interface.<br>• Enter the *type interface-path-id* argument to display PPP information for a specific interface.<br>• Enter the **brief** keyword to display brief output for all interfaces on the router, for a specific interface instance, or for all interfaces on a specific node.<br>• Enter the **all** keyword to display detailed PPP information for all nodes installed in the router.<br>• Enter the **location** *node-id* keyword argument to display detailed PPP information for the designated node.<br>There are seven possible PPP states applicable for either the Link Control Protocol (LCP) or the Network Control Protocol (NCP). |

### What to do next

Configure a PAP, CHAP, or MS-CHAP authentication password, as described in the appropriate section:

- If you enabled PAP on an interface, configure a PAP authentication username and password, as described in the “Configuring a PAP Authentication Password” section on page 641.
- If you enabled CHAP on an interface, configure a CHAP authentication password, as described in the “Configuring a CHAP Authentication Password” section on page 643
- If you enabled MS-CHAP on an interface, configure an MS-CHAP authentication password, as described in the “Configuring an MS-CHAP Authentication Password” section on page 645

## Configuring a PAP Authentication Password

This task explains how to enable and configure PAP authentication on a serial or POS interface.

**Note** PAP is the least secure authentication protocol available on POS and interfaces. To ensure higher security for information that is sent over POS and interfaces, we recommend configuring CHAP or MS-CHAP authentication in addition to PAP authentication.

### Before you begin

You must enable PAP authentication on the interface with the **ppp authentication** command, as described in the Enabling PAP, CHAP, and MS-CHAP Authentication.

## SUMMARY STEPS

1. **configure**
2. **interface** *type interface-path-id*
3. **ppp pap sent-username** *username* **password** [**clear** | **encrypted**] *password*
4. **end** or **commit**
5. **show running-config**

## DETAILED STEPS

| | Command or Action | Purpose |
|---|---|---|
| **Step 1** | **configure**<br>**Example:**<br>`RP/0/RSP0/CPU0:router# configure` | Enters global configuration mode. |
| **Step 2** | **interface** *type interface-path-id*<br>**Example:**<br>`RP/0/RSP0/CPU0:router(config)# interface serial 0/4/0/1` | Enters interface configuration mode. |
| **Step 3** | **ppp pap sent-username** *username* **password** [**clear** \| **encrypted**] *password*<br>**Example:**<br>`RP/0/RSP0/CPU0:router(config-if)# ppp pap sent-username xxxx password notified` | Enables remote Password Authentication Protocol (PAP) support for an interface, and includes the **sent-username** and **password** commands in the PAP authentication request packet to the peer.<br>• Replace the *username* argument with the username sent in the PAP authentication request.<br>• Enter **password clear** to select cleartext encryption for the password, or enter **password encrypted** if the password is already encrypted.<br>• The **ppp pap sent-username** command allows you to replace several username and password configuration commands with a single copy of this command on interfaces. |

| | Command or Action | Purpose |
|---|---|---|
| | | • You must configure the **ppp pap sent-username** command for each interface.<br>• Remote PAP support is disabled by default. |
| **Step 4** | **end** or **commit**<br>**Example:**<br>`RP/0/RSP0/CPU0:router(config-if)# end`<br>or<br>`RP/0/RSP0/CPU0:router(config-if)# commit` | Saves configuration changes.<br>• When you issue the **end** command, the system prompts you to commit changes:<br>`Uncommitted changes found, commit them before exiting(yes/no/cancel)? [cancel]:`<br>- Entering **yes** saves configuration changes to the running configuration file, exits the configuration session, and returns the router to EXEC mode.<br>- Entering **no** exits the configuration session and returns the router to EXEC mode without committing the configuration changes.<br>- Entering **cancel** leaves the router in the current configuration session without exiting or committing the configuration changes.<br>• Use the **commit** command to save the configuration changes to the running configuration file and remain within the configuration session. |
| **Step 5** | **show running-config**<br>**Example:**<br>`RP/0/RSP0/CPU0:router# show running-config` | Verifies PPP authentication information for interfaces that have PPP encapsulation enabled. |

## Configuring a CHAP Authentication Password

This task explains how to enable CHAP authentication and configure a CHAP password on a serial or POS interface.

### Before you begin

You must enable CHAP authentication on the interface with the **ppp authentication** command, as described in the Enabling PAP, CHAP, and MS-CHAP Authentication.

### Restrictions

The same CHAP password must be configured on both host endpoints.

### SUMMARY STEPS

1. **configure**
2. **interface** *type interface-path-id*

3. **ppp chap password** [**clear** | **encrypted**] *password*
4. **end** or **commit**
5. **show running-config**

## DETAILED STEPS

| | Command or Action | Purpose |
|---|---|---|
| **Step 1** | **configure**<br>**Example:**<br>`RP/0/RSP0/CPU0:router# configure` | Enters global configuration mode. |
| **Step 2** | **interface** *type interface-path-id*<br>**Example:**<br>`RP/0/RSP0/CPU0:router(config)# interface serial 0/4/0/1` | Enters interface configuration mode. |
| **Step 3** | **ppp chap password** [**clear** \| **encrypted**] *password*<br>**Example:**<br>`RP/0/RSP0/CPU0:router(config-if)# ppp chap password clear xxxx` | Enables CHAP authentication on the specified interface, and defines an interface-specific CHAP password.<br>• Enter **clear** to select cleartext encryption, or **encrypted** if the password is already encrypted.<br>• Replace the *password* argument with a cleartext or already-encrypted password. This password is used to authenticate secure communications among a collection of routers.<br>• The **ppp chap password** command is used for remote CHAP authentication only (when routers authenticate to the peer) and does not effect local CHAP authentication.This command is useful when you are trying to authenticate a peer that does not support this command (such as a router running an older Cisco IOS XR software image).<br>• The CHAP secret password is used by the routers in response to challenges from an unknown peer. |
| **Step 4** | **end** or **commit**<br>**Example:**<br>`RP/0/RSP0/CPU0:router(config-if)# end`<br>or<br>`RP/0/RSP0/CPU0:router(config-if)# commit` | Saves configuration changes.<br>• When you issue the **end** command, the system prompts you to commit changes:<br>`Uncommitted changes found, commit them before exiting(yes/no/cancel)? [cancel]:`<br>- Entering **yes** saves configuration changes to the running configuration file, exits the configuration session, and returns the router to EXEC mode. |

| | Command or Action | Purpose |
|---|---|---|
| | | - Entering **no** exits the configuration session and returns the router to EXEC mode without committing the configuration changes.<br>- Entering **cancel** leaves the router in the current configuration session without exiting or committing the configuration changes.<br>• Use the **commit** command to save the configuration changes to the running configuration file and remain within the configuration session. |
| **Step 5** | **show running-config**<br>**Example:**<br>`RP/0/RSP0/CPU0:router# show running-config` | Verifies PPP authentication information for interfaces that have PPP encapsulation enabled. |

## Configuring an MS-CHAP Authentication Password

This task explains how to enable MS-CHAP authentication and configure an MS-CHAP password on a serial or POS interface.

### Before you begin

You must enable MS-CHAP authentication on the interface with the **ppp authentication** command, as described in the Enabling PAP, CHAP, and MS-CHAP Authentication.

**Restrictions**

The same MS-CHAP password must be configured on both host endpoints.

### SUMMARY STEPS

1. **configure**
2. **interface** *type interface-path-id*
3. **ppp ms-chap password** [**clear** | **encrypted**] *password*
4. **end** or **commit**
5. **show running-config**

### DETAILED STEPS

| | Command or Action | Purpose |
|---|---|---|
| **Step 1** | **configure**<br>**Example:**<br>`RP/0/RSP0/CPU0:router# configure` | Enters global configuration mode. |
| **Step 2** | **interface** *type interface-path-id*<br>**Example:** | Enters interface configuration mode. |

| | Command or Action | Purpose |
|---|---|---|
| | `RP/0/RSP0/CPU0:router(config)# interface serial 0/4/0/1` | |
| **Step 3** | **ppp ms-chap password** [**clear** \| **encrypted**] *password*<br>**Example:**<br>`RP/0/RSP0/CPU0:router(config-if)# ppp ms-chap password clear xxxx` | Enables a router calling a collection of routers to configure a common Microsoft Challenge Handshake Authentication (MS-CHAP) secret password.<br>The MS-CHAP secret password is used by the routers in response to challenges from an unknown peer. |
| **Step 4** | **end** or **commit**<br>**Example:**<br>`RP/0/RSP0/CPU0:router(config-if)# end`<br>or<br>`RP/0/RSP0/CPU0:router(config-if)# commit` | Saves configuration changes.<br>• When you issue the **end** command, the system prompts you to commit changes:<br>`Uncommitted changes found, commit them before exiting(yes/no/cancel)? [cancel]:`<br>- Entering **yes** saves configuration changes to the running configuration file, exits the configuration session, and returns the router to EXEC mode.<br>- Entering **no** exits the configuration session and returns the router to EXEC mode without committing the configuration changes.<br>- Entering **cancel** leaves the router in the current configuration session without exiting or committing the configuration changes.<br>• Use the **commit** command to save the configuration changes to the running configuration file and remain within the configuration session. |
| **Step 5** | **show running-config**<br>**Example:**<br>`RP/0/RSP0/CPU0:router# show running-config` | Verifies PPP authentication information for interfaces that have PPP encapsulation enabled. |

# Disabling an Authentication Protocol

This section contains the following procedures:

## Disabling PAP Authentication on an Interface

This task explains how to disable PAP authentication on a serial or POS interface.

### SUMMARY STEPS

1. **configure**

2. **interface** *type interface-path-id*
3. **ppp pap refuse**
4. **end** or **commit**
5. **show running-config**

## DETAILED STEPS

| | Command or Action | Purpose |
|---|---|---|
| **Step 1** | **configure**<br>**Example:**<br>`RP/0/RSP0/CPU0:router# configure` | Enters global configuration mode. |
| **Step 2** | **interface** *type interface-path-id*<br>**Example:**<br>`RP/0/RSP0/CPU0:router(config)# interface serial 0/4/0/1` | Enters interface configuration mode. |
| **Step 3** | **ppp pap refuse**<br>**Example:**<br>`RP/0/RSP0/CPU0:router(config-if)# ppp pap refuse` | Refuses Password Authentication Protocol (PAP) authentication from peers requesting it.<br>• If outbound Challenge Handshake Authentication Protocol (CHAP) has been configured (using the **ppp authentication** command), CHAP will be suggested as the authentication method in the refusal packet.<br>• PAP authentication is disabled by default. |
| **Step 4** | **end** or **commit**<br>**Example:**<br>`RP/0/RSP0/CPU0:router(config-if)# end`<br>or<br>`RP/0/RSP0/CPU0:router(config-if)# commit` | Saves configuration changes.<br>• When you issue the **end** command, the system prompts you to commit changes:<br>`Uncommitted changes found, commit them before exiting(yes/no/cancel)? [cancel]:`<br>- Entering **yes** saves configuration changes to the running configuration file, exits the configuration session, and returns the router to EXEC mode.<br>- Entering **no** exits the configuration session and returns the router to EXEC mode without committing the configuration changes.<br>- Entering **cancel** leaves the router in the current configuration session without exiting or committing the configuration changes.<br>• Use the **commit** command to save the configuration changes to the running configuration file and remain within the configuration session. |

| | Command or Action | Purpose |
|---|---|---|
| **Step 5** | **show running-config**<br>**Example:**<br>`RP/0/RSP0/CPU0:router# show running-config` | Verifies PPP authentication information for interfaces that have PPP encapsulation enabled. |

## Disabling CHAP Authentication on an Interface

This task explains how to disable CHAP authentication on a serial or POS interface.

### SUMMARY STEPS

1. **configure**
2. **interface** *type interface-path-id*
3. **ppp chap refuse**
4. **end** or **commit**
5. **show running-config**

### DETAILED STEPS

| | Command or Action | Purpose |
|---|---|---|
| **Step 1** | **configure**<br>**Example:**<br>`RP/0/RSP0/CPU0:router# configure` | Enters global configuration mode. |
| **Step 2** | **interface** *type interface-path-id*<br>**Example:**<br>`RP/0/RSP0/CPU0:router(config)# interface serial 0/4/0/1` | Enters interface configuration mode. |
| **Step 3** | **ppp chap refuse**<br>**Example:**<br>`RP/0/RSP0/CPU0:router(config-if)# ppp chap refuse` | Refuses CHAP authentication from peers requesting it. After you enter the **ppp chap refuse** command under the specified interface, all attempts by the peer to force the user to authenticate with the help of CHAP are refused.<br>• CHAP authentication is disabled by default.<br>• If outbound Password Authentication Protocol (PAP) has been configured (using the **ppp authentication** command), PAP will be suggested as the authentication method in the refusal packet. |
| **Step 4** | **end** or **commit**<br>**Example:**<br>`RP/0/RSP0/CPU0:router(config-if)# end`<br>or | Saves configuration changes.<br>• When you issue the **end** command, the system prompts you to commit changes:<br>`Uncommitted changes found, commit them before` |

| | Command or Action | Purpose |
|---|---|---|
| | `RP/0/RSP0/CPU0:router(config-if)# commit` | `exiting(yes/no/cancel)? [cancel]:`<br>- Entering **yes** saves configuration changes to the running configuration file, exits the configuration session, and returns the router to EXEC mode.<br>- Entering **no** exits the configuration session and returns the router to EXEC mode without committing the configuration changes.<br>- Entering **cancel** leaves the router in the current configuration session without exiting or committing the configuration changes.<br>• Use the **commit** command to save the configuration changes to the running configuration file and remain within the configuration session. |
| **Step 5** | **show running-config**<br>**Example:**<br>`RP/0/RSP0/CPU0:router# show running-config` | Verifies PPP authentication information for interfaces that have PPP encapsulation enabled. |

## Disabling MS-CHAP Authentication on an Interface

This task explains how to disable MS-CHAP authentication on a serial or POS interface.

### SUMMARY STEPS

1. **configure**
2. **interface** *type interface-path-id*
3. **ppp ms-chap refuse**
4. **end** or **commit**
5. **show running-config**

### DETAILED STEPS

| | Command or Action | Purpose |
|---|---|---|
| **Step 1** | **configure**<br>**Example:**<br>`RP/0/RSP0/CPU0:router# configure` | Enters global configuration mode. |
| **Step 2** | **interface** *type interface-path-id*<br>**Example:**<br>`RP/0/RSP0/CPU0:router(config)# interface serial 0/4/0/1` | Enters interface configuration mode. |

| | Command or Action | Purpose |
|---|---|---|
| **Step 3** | **ppp ms-chap refuse**<br>**Example:**<br>`RP/0/RSP0/CPU0:router(config-if)# ppp ms-chap refuse` | Refuses MS-CHAP authentication from peers requesting it. After you enter the **ppp ms-chap refuse** command under the specified interface, all attempts by the peer to force the user to authenticate with the help of MS-CHAP are refused.<br>• MS-CHAP authentication is disabled by default.<br>• If outbound Password Authentication Protocol (PAP) has been configured (using the **ppp authentication** command), PAP will be suggested as the authentication method in the refusal packet. |
| **Step 4** | **end** or **commit**<br>**Example:**<br>`RP/0/RSP0/CPU0:router(config-if)# end`<br>or<br>`RP/0/RSP0/CPU0:router(config-if)# commit` | Saves configuration changes.<br>• When you issue the **end** command, the system prompts you to commit changes:<br>`Uncommitted changes found, commit them before exiting(yes/no/cancel)? [cancel]:`<br>- Entering **yes** saves configuration changes to the running configuration file, exits the configuration session, and returns the router to EXEC mode.<br>- Entering **no** exits the configuration session and returns the router to EXEC mode without committing the configuration changes.<br>- Entering **cancel** leaves the router in the current configuration session without exiting or committing the configuration changes.<br>• Use the **commit** command to save the configuration changes to the running configuration file and remain within the configuration session. |
| **Step 5** | **show running-config**<br>**Example:**<br>`RP/0/RSP0/CPU0:router# show running-config` | Verifies PPP authentication information for interfaces that have PPP encapsulation enabled. |

# Configuring Multilink PPP

This section contains the following procedures:

### Before you begin

- MLPPP and LFI are supported on the 1-Port Channelized OC-3/STM-1 SPA and 2-Port Channelized OC-12/DS0 SPA.

### Restrictions

MLPPP for Cisco IOS XR software has the following restrictions:

- Only full rate T1s are supported.
- All links in a bundle must belong to the same SPA.
- All links in a bundle must operate at the same speed.
- A maximum of 10 links per bundle is supported.
- A maximum of 700 bundles per line card is supported.
- A maximum of 2600 bundles per system is supported.
- MLPPP interfaces are not supported with DS0 link members.
- MLPPP interfaces are not be supported with T3 channels as members. Therefore, LFI is also unsupported on T3 channels.
- All serial links in an MLPPP bundle inherit the value of the **mtu** command from the multilink interface. Therefore, you should not configure the **mtu** command on a serial interface before configuring it as a member of an MLPPP bundle. The Cisco IOS XR software blocks the following:
  - Attempts to configure a serial interface as a member of an MLPPP bundle if the interface is configured with a nondefault MTU value.
  - Attempts to change the **mtu** command value for a serial interface that is configured as a member of an MLPPP bundle.

    In Cisco IOS XR software, multilink processing is controlled by a hardware module called the Multilink Controller, which consists of an ASIC, network processor, and CPU working in conjunction. The MgmtMultilink Controller makes the multilink interfaces behave like the serial interfaces of channelized SPAs.

## Configuring the Controller

Perform this task to configure the controller.

### SUMMARY STEPS

1. **configure**
2. **controller** *type interface-path-id*
3. **mode** *type*
4. **clock source** {**internal** | **line**}
5. **exit**
6. **controller t1** *interface-path-id*
7. **channel-group** *channel-group-number*
8. **timeslots** *range*
9. **exit**
10. **exit**
11. **controller mgmtmultilink** *interface-path-id*
12. **bundle** *bundle-id*
13. **end** or **commit**

## DETAILED STEPS

| | Command or Action | Purpose |
|---|---|---|
| **Step 1** | **configure**<br>**Example:**<br>`RP/0/RSP0/CPU0:router# configure` | Enters global configuration mode. |
| **Step 2** | **controller** *type interface-path-id*<br>**Example:**<br>`RP/0/RSP0/CPU0:router(config)# controller t3 0/1/0/0` | Enters controller configuration submode and specifies the controller name and instance identifier in *rack/slot/module/port* notation. |
| **Step 3** | **mode** *type*<br>**Example:**<br>`RP/0/RSP0/CPU0:router# mode t1` | Configures the type of multilinks to channelize; for example, 28 T1s. |
| **Step 4** | **clock source** {**internal** \| **line**}<br>**Example:**<br>`RP/0/RSP0/CPU0:router(config-t3)# clock source internal` | (Optional) Configures the clocking for the port.<br>**Note** • The default clock source is **internal**. |
| **Step 5** | **exit**<br>**Example:**<br>`RP/0/RSP0/CPU0:router(config-t3)# exit` | Exits controller configuration mode. |
| **Step 6** | **controller t1** *interface-path-id*<br>**Example:**<br>`RP/0/RSP0/CPU0:router(config)# controller t1 0/1/0/0/1` | Enters T1 configuration mode. |
| **Step 7** | **channel-group** *channel-group-number*<br>**Example:**<br>`RP/0/RSP0/CPU0:router(config-t1)# channel-group 0` | Creates a T1 channel group and enters channel group configuration mode for that channel group. Channel group numbers can range from 0 to 23. |
| **Step 8** | **timeslots** *range*<br>**Example:**<br>`RP/0/RSP0/CPU0:router(config-t1-channel_group)# timeslots 1-24` | Associates one or more DS0 time slots to a channel group and creates an associated serial subinterface on that channel group.<br>• Range is from 1 to 24 time slots.<br>• **Note** • The time slot range must be from 1 to 24 for the resulting serial interface to be accepted into a MLPPP bundle. |

| | Command or Action | Purpose |
|---|---|---|
| **Step 9** | **exit**<br>**Example:**<br>`RP/0/RSP0/CPU0:router(config-t1-channel_group)# exit` | Exits channel group configuration mode. |
| **Step 10** | **exit**<br>**Example:**<br>`RP/0/RSP0/CPU0:router(config-t1)# exit` | Exits T1 configuration mode and enters global configuration mode. |
| **Step 11** | **controller mgmtmultilink** *interface-path-id*<br>**Example:**<br>`RP/0/RSP0/CPU0:router(config)# controller mgmtmultilink 0/1/0/0` | Enters controller configuration submode for the management of multilink interfaces. Specify the controller name and instance identifier in *rack/slot/module/port* notation. |
| **Step 12** | **bundle** *bundle-id*<br>**Example:**<br>`RP/0/RSP0/CPU0:router(config-mgmtmultilink)# bundle 20` | Creates a multilink interface with the specified bundle ID. |
| **Step 13** | **end** or **commit**<br>**Example:**<br>`RP/0/RSP0/CPU0:router(config-t3)# end`<br>or<br>`RP/0/RSP0/CPU0:router(config-t3)# commit` | Saves configuration changes.<br>• When you issue the **end** command, the system prompts you to commit changes:<br>`Uncommitted changes found, commit them before exiting(yes/no/cancel)? [cancel]:`<br>- Entering **yes** saves configuration changes to the running configuration file, exits the configuration session, and returns the router to EXEC mode.<br>- Entering **no** exits the configuration session and returns the router to EXEC mode without committing the configuration changes.<br>- Entering **cancel** leaves the router in the current configuration session without exiting or committing the configuration changes.<br>• Use the **commit** command to save the configuration changes to the running configuration file and remain within the configuration session. |

## Configuring the Interfaces

Perform this task to configure the interfaces.

### Restrictions

- All serial links in an MLPPP bundle inherit the value of the **mtu** command from the multilink interface. Therefore, you should not configure the **mtu** command on a serial interface before configuring it as a member of an MLPPP bundle. The Cisco IOS XR software blocks the following:
  - Attempts to configure a serial interface as a member of an MLPPP bundle if the interface is configured with a nondefault MTU value.
  - Attempts to change the **mtu** command value for a serial interface that is configured as a member of an MLPPP bundle.

## SUMMARY STEPS

1. **configure**
2. **interface multilink** *interface-path-id*
3. **ipv4 address** *ip-address*
4. **multilink fragment-size** *bytes* or **multilink fragment delay** *delay-ms*
5. **keepalive** {*interval* | **disable**}[*retry*]
6. **exit**
7. **interface** *type interface-path-id*
8. **encapsulation** *type*
9. **multilink group** *group-id*
10. **end** or **commit**

## DETAILED STEPS

| | Command or Action | Purpose |
|---|---|---|
| **Step 1** | **configure**<br>**Example:**<br>`RP/0/RSP0/CPU0:router# configure` | Enters global configuration mode. |
| **Step 2** | **interface multilink** *interface-path-id*<br>**Example:**<br>`RP/0/RSP0/CPU0:router(config)# interface multilink 0/1/0/0/1` | Specifies the multilink interface name and instance identifier in *rack/slot/module/port/bundle-id* notation, and enters interface configuration mode. |
| **Step 3** | **ipv4 address** *ip-address*<br>**Example:**<br>`RP/0/RSP0/CPU0:router(config-if)# ipv4 address 80.170.0.1/24` | Assigns an IP address and subnet mask to the interface in the format:<br>*`A.B.C.D/prefix`* or *`A.B.C.D/mask`* |
| **Step 4** | **multilink fragment-size** *bytes* or **multilink fragment delay** *delay-ms*<br>**Example:** | (Optional) Specifies the size of the multilink fragments, such as 128 bytes. Some fragment sizes may not be supported. The default is no fragments.<br>or |

| | Command or Action | Purpose |
|---|---|---|
| | `RP/0/RSP0/CPU0:router(config-if)# multilink fragment-size 350`<br>or<br>`RP/0/RSP0/CPU0:router(config-if)# multilink fragment delay 2` | (Optional) Specifies the multilink fragment delay in milliseconds. This sets the MLPPP fragment size so that it is equivalent in length to the transmission time delay for any individual member-link (T1s with bandwidths of 1536000bps/192000Bps).<br>If the user specifies **fragment delay 2,** the fragment size is (192000*.002)=384B. The usage of this command is exclusive to the usage of **fragment size**. Either command overrides the other. |
| **Step 5** | **keepalive** {*interval* \| **disable**}[*retry*]<br>**Example:**<br>`RP/0/RSP0/CPU0:router(config-if)# keepalive disable` | Sets the keepalive timer for the channel, where:<br>• *interval*—Number of seconds (from 1 to 30) between keepalive messages. The default is 10.<br>• **disable**—Turns off the keepalive timer.<br>• *retry*—(Optional) Number of keepalive messages (from 1 to 255) that can be sent to a peer without a response before transitioning the link to the down state. The default is 3.<br>**Note** • To connect with some Cisco IOS devices, multilink keepalives need to be disabled on both devices. |
| **Step 6** | **exit**<br>**Example:**<br>`RP/0/RSP0/CPU0:router(config-if)# exit` | Exits interface configuration mode and enters global configuration mode. |
| **Step 7** | **interface** *type interface-path-id*<br>**Example:**<br>`RP/0/RSP0/CPU0:router(config)# interface serial 0/1/0/0/1:0` | Specifies the interface name and instance identifier in *rack/slot/module/port/t1-number:channel-group* notation, and enters interface configuration mode. |
| **Step 8** | **encapsulation** *type*<br>**Example:**<br>`RP/0/RSP0/CPU0:router(config-if)# encapsulation ppp` | Specifies the type of encapsulation; in this case, PPP. |
| **Step 9** | **multilink group** *group-id*<br>**Example:**<br>`RP/0/RSP0/CPU0:router(config-if)# multilink group 20` | Specifies the multilink group ID for this interface. |
| **Step 10** | **end** or **commit** | Saves configuration changes. |

| | Command or Action | Purpose |
|---|---|---|
| | **Example:**<br>`RP/0/RSP0/CPU0:router(config-t3)# end`<br>or<br>`RP/0/RSP0/CPU0:router(config-t3)# commit` | • When you issue the **end** command, the system prompts you to commit changes:<br>`Uncommitted changes found, commit them before exiting(yes/no/cancel)? [cancel]:`<br>- Entering **yes** saves configuration changes to the running configuration file, exits the configuration session, and returns the router to EXEC mode.<br>- Entering **no** exits the configuration session and returns the router to EXEC mode without committing the configuration changes.<br>- Entering **cancel** leaves the router in the current configuration session without exiting or committing the configuration changes.<br>• Use the **commit** command to save the configuration changes to the running configuration file and remain within the configuration session. |

## Configuring MLPPP Optional Features

Perform this task to configure either of the following optional features:

- Minimum number of active links
- Multilink interleave

**Note** Minimum number active links must be configured at both endpoints.

### SUMMARY STEPS

1. **configure**
2. **interface multilink** *interface-path-id*
3. **multilink**
4. **ppp multilink minimum-active links** *value*
5. **multilink interleave**
6. **no shutdown**
7. **end** or **commit**

## DETAILED STEPS

| | Command or Action | Purpose |
|---|---|---|
| **Step 1** | **configure**<br>**Example:**<br>`RP/0/RSP0/CPU0:router# configure` | Enters global configuration mode. |
| **Step 2** | **interface multilink** *interface-path-id*<br>**Example:**<br>`RP/0/RSP0/CPU0:router(config)# interface multilink 0/1/0/0/1` | Specifies the multilink interface name and instance identifier in *rack/slot/module/port/bundle-id* notation, and enters interface configuration mode. |
| **Step 3** | **multilink**<br>**Example:**<br>`RP/0/RSP0/CPU0:router(config-if)# multilink` | Enters interface multilink configuration mode. |
| **Step 4** | **ppp multilink minimum-active links** *value*<br>**Example:**<br>`RP/0/RSP0/CPU0:router(config-if-multilink)# ppp multilink minimum-active links 12` | (Optional) Specifies the minimum number of active links for the multilink interface.<br>**Note** • When support for the Noise Attribute is configured to signal PPP to remove links on MLPPP bundles when LNM thresholds are crossed on a link, the links will not be removed below this miminum-active threshold. |
| **Step 5** | **multilink interleave**<br>**Example:**<br>`RP/0/RSP0/CPU0:router(config-if-multilink)# multilink interleave` | (Optional) Enables interleave on a multilink interface. |
| **Step 6** | **no shutdown**<br>**Example:**<br>`RP/0/RSP0/CPU0:router(config-if-mutlilink)# no shutdown` | Removes the shutdown configuration.<br>• The removal of the shutdown configuration removes the forced administrative down on the controller, enabling the controller to move to an up or a down state. |
| **Step 7** | **end** or **commit**<br>**Example:**<br>`RP/0/RSP0/CPU0:router(config-t3)# end`<br>or<br>`RP/0/RSP0/CPU0:router(config-t3)# commit` | Saves configuration changes.<br>• When you issue the **end** command, the system prompts you to commit changes:<br>`Uncommitted changes found, commit them before exiting(yes/no/cancel)? [cancel]:` |

| | Command or Action | Purpose |
|---|---|---|
| | | - Entering **yes** saves configuration changes to the running configuration file, exits the configuration session, and returns the router to EXEC mode.<br>- Entering **no** exits the configuration session and returns the router to EXEC mode without committing the configuration changes.<br>- Entering **cancel** leaves the router in the current configuration session without exiting or committing the configuration changes.<br>• Use the **commit** command to save the configuration changes to the running configuration file and remain within the configuration session. |

# Configuring ICSSO for PPP and MLPPP

This section provides the following ICSSO configuration procedures:

### Before you begin

The Cisco ASR 9000 Series Router supports ICSSO in the following MR-APS, minimum equipment, hardware configurations:

- Two 6-slot or 8-slot chassis
- Four route/switch processors (RSPs), two per chassis (offers a higher degree of reliability)
- Two 20G SIPs, 1 per chassis
- Two of the following SPA types 1 per chassis:
  - 2-Port Channelized OC-12/DS0 SPA
  - 4-Port Channelized T3 SPA
  - 8-Port Channelized T1/E1 SPA
- Two 40 Gigabit Ethernet line cards, 2 per chassis
- Two 4-Port 10 Gigabit Ethernet line cards, 1 per chassis
- 1-Port Channelized OC-3/STM-1 SPA (SPA-1XCHSTM1/OC3)

### Restrictions

The following restrictions apply to ICSSO for PPP and MLPPP:

- ICSSO is supported only on two independent routers. ICSSO for two line cards on the same router is not supported.
- Automated synchronization or verification of the IOS XR system configuration between the ICSSO peer routers is not available.

- The following restrictions apply to ICSSO on the 2-Port Channelized OC-12/DS0 SPA:
  - ICSSO is supported only on T1/T3 PPP and T1/MLPPP interfaces.
  - T1 member links must terminate on the same SPA.
  - Member links in an MLPPP bundle being protected by MR-APS must all be contained in the same SONET port, this SONET port being a part of the MR-APS protection pair.
  - T1/PPP, T3/PPP and MLPPP encapsulated interfaces on the OC-12 SONET interface can be protected.
- The following restrictions apply to ICSSO on the 1-Port Channelized T3 SPA:
  - Supported for PPP on T3, T1, E1 channels only.
  - Supported for member links in an MLPPP on E1 channels only.
- The following restrictions apply to ICSSO on the 8-Port Channelized T1/E1 SPA:
  - Supported for PPP on T1 and E1 channels only.
  - Supported for member links in an MLPPP on E1 channels only.

## Configuring a Basic ICSSO Implementation

Use the following procedure to configure a simple version of ICSSO.

### SUMMARY STEPS

1. **config**
2. **redundancy**
3. **multi-router aps**
4. **group** *group_number*
5. **controller sonet** *path*
6. **member ipv4** *address* **backup-interface type** *interface-path-id*
7. **commit**
8. **show running config**

### DETAILED STEPS

| | Command or Action | Purpose |
|---|---|---|
| **Step 1** | **config**<br>**Example:**<br>`RP/0/RSP0/CPU0:router# config` | Enters global configuration mode. |
| **Step 2** | **redundancy**<br>**Example:**<br>`RP/0/RSP0/CPU0:router(config)# redundancy` | Enters redundancy configuration mode. |

| | Command or Action | Purpose |
|---|---|---|
| **Step 3** | **multi-router aps**<br>**Example:**<br>`RP/0/RSP0/CPU0:router(config-redundancy)# multi-router aps` | Configures Multi-Router APS redundancy and enters APS redundancy configuration mode. |
| **Step 4** | **group** *group_number*<br>**Example:**<br>`RP/0/RSP0/CPU0:router(config-redundancy-aps)# group 1` | Configures the APS redundancy group and assigns the group number. |
| **Step 5** | **controller sonet** *path*<br>**Example:**<br>`RP/0/RSP0/CPU0:router(config-redundancy-aps-group)# controller sonet 0/1/0/0` | Specifies a SONET controller as the APS redundancy backup. |
| **Step 6** | **member ipv4** *address* **backup-interface type** *interface-path-id*<br>**Example:**<br>`RP/0/RSP0/CPU0:router(config-redundancy-group-controller)# member ipv4 10.10.10.10 backup-interface GigabitEthernet 0/6/0/1` | Specifies the IP address of the backup interface used by IP-FRR. |
| **Step 7** | **commit**<br>**Example:**<br>`RP/0/RSP0/CPU0:router(config-redundancy-group-controller)# commit` | Saves the configuration. |
| **Step 8** | **show running config**<br>**Example:**<br>`RP/0/RSP0/CPU0:router# show running config` | Displays the current configuration on the router, including MR-APS, SONET controller, and IP address information for verifying the configuration. |

## Configuring MR-APS

Use the following procedure to configure MR-APS.

### SUMMARY STEPS

1. **config**
2. **aps group** *number*
3. **channel {0 | 1} remote** *ip-address*
4. **channel {0 | 1} local sonet** *interface-path-id*
5. **exit**

6. **aps rprplus**
7. **interface GigabitEthernet** *interface-path-id*
8. **description** *text*
9. **ipv4 address** *ipv4-address mask*
10. **commit**

## DETAILED STEPS

| | Command or Action | Purpose |
|---|---|---|
| **Step 1** | **config**<br>**Example:**<br>`RP/0/RSP0/CPU0:router# config` | Enters global configuration mode. |
| **Step 2** | **aps group** *number*<br>**Example:**<br>`RP/0/RSP0/CPU0:router(config)# aps group 1` | Adds an automatic protection switching (APS) group and enter APS group configuration mode. |
| **Step 3** | **channel {0 \| 1} remote** *ip-address*<br>**Example:**<br>`RP/0/RSP0/CPU0:router(config-aps)# channel 0 remote 99.10.1.2` | Assigns a port and interface that is physically located in a remote router as a SONET APS channel.<br>• 0 designates the channel as protect channel.<br>• 1 designates the channel as a working channel. |
| **Step 4** | **channel {0 \| 1} local sonet** *interface-path-id*<br>**Example:**<br>`RP/0/RSP0/CPU0:router(config-aps)# channel 1 local SONET 0/1/0/0` | Assigns a local SONET physical port as a SONET APS channel.<br>• 0 designates the channel as protect channel.<br>• 1 designates the channel as a working channel. |
| **Step 5** | **exit**<br>**Example:**<br>`RP/0/RSP0/CPU0:router(config-aps)# exit` | Exits to the previous mode. |
| **Step 6** | **aps rprplus**<br>**Example:**<br>`RP/0/RSP0/CPU0:router(config-aps)# aps rprplus` | Extends the APS hold timer for a switchover. |
| **Step 7** | **interface GigabitEthernet** *interface-path-id*<br>**Example:**<br>`RP/0/RSP0/CPU0:router(config)# interface GigabitEthernet 0/6/0/0` | Creates a Gigabit Ethernet interface as the path to the MR-APS peer, and enters interface configuration mode. |

| | Command or Action | Purpose |
|---|---|---|
| **Step 8** | **description** *text*<br>**Example:**<br>`RP/0/RSP0/CPU0:router(config-if)# description MR-APS PGP interface for aps group 1` | Adds a text description to this interface. |
| **Step 9** | **ipv4 address** *ipv4-address mask*<br>**Example:**<br>`RP/0/RSP0/CPU0:router(config-if )# ipv4 address 99.10.1.1 255.255.255.0` | Sets the primary IPv4 address and subnet mask for an interface. |
| **Step 10** | **commit**<br>**Example:**<br>`RP/0/RSP0/CPU0:router(config-if)# commit` | Saves the current configuration. |

## Configuring SSRP on Serial and Multilink Interfaces

Use the following procedure to configure SSRP on serial and multilink interfaces:

### SUMMARY STEPS

1. **config**
2. **ssrp profile** *profile-name*
3. **peer ipv4 address** *A.B.C.D*
4. **exit**
5. **ssrp location** *node_id*
6. **group** *group-id* **profile** *profile_name*
7. **group** *group-id* **profile** *profile_name*
8. **exit**
9. **interface serial** *interface-path-id[.subinterface]*
10. **ssrp group** *group-number* **id** *id-number* **ppp**
11. **encapsulation ppp**
12. **multilink**
13. **group** *group-id*
14. **exit**
15. **keepalive disable**
16. **exit**
17. **interface serial** *interface-path-id[.subinterface]*
18. **ssrp group** *group-number* **id** *id-number* **ppp**
19. **encapsulation ppp**
20. **multilink**
21. **group** *group-id*
22. **exit**
23. **keepalive disable**

24. **exit**
25. **interface multilink** *interface-path-id*
26. **ipv4 address** *ipv4-address mask*
27. **ssrp group** *group-number* **id** *id-number* **ppp**
28. **encapsulation ppp**
29. **shutdown**
30. **keepalive disable**
31. **exit**
32. **controller MgmtMultilink** *interface-path-id*
33. **bundle** *bundleID*
34. **bundle** *bundleID*
35. **commit**

## DETAILED STEPS

| | Command or Action | Purpose |
|---|---|---|
| **Step 1** | **config**<br>**Example:**<br>`RP/0/RSP0/CPU0:router# config` | Enters global configuration mode. |
| **Step 2** | **ssrp profile** *profile-name*<br>**Example:**<br>`RP/0/RSP0/CPU0:router(config)# ssrp profile Profile_1` | Configures the Session State Redundancy Protocol (SSRP) profile and enters the SSRP configuration mode. |
| **Step 3** | **peer ipv4 address** *A.B.C.D*<br>**Example:**<br>`RP/0/RSP0/CPU0:router(config)# peer ipv4 address 10.10.10.10` | Configures the IPv4 address for a Session State Redundancy Protocol (SSRP) peer. |
| **Step 4** | **exit**<br>**Example:**<br>`RP/0/RSP0/CPU0:router(config-aps)# exit` | Exits to the previous mode. |
| **Step 5** | **ssrp location** *node_id*<br>**Example:**<br>`RP/0/RSP0/CPU0:router(config)# ssrp location 0/1/CPU0` | Specifies the node on which to create a Session State Redundancy Protocol (SSRP) group and enters the SSRP node configuration mode |
| **Step 6** | **group** *group-id* **profile** *profile_name*<br>**Example:** | Creates a Session State Redundancy Protocol (SSRP) group and associates it with a profile. |

| | Command or Action | Purpose |
|---|---|---|
| | `RP/0/RSP0/CPU0:router(config-ssrp)# group 1 profile Profile_1` | |
| **Step 7** | **group** *group-id* **profile** *profile_name*<br>**Example:**<br>`RP/0/RSP0/CPU0:router(config-ssrp-node)# group 2 profile Profile_2` | Creates a second Session State Redundancy Protocol (SSRP) group and associates it with a profile. |
| **Step 8** | **exit**<br>**Example:**<br>`RP/0/RSP0/CPU0:router(config-ssrp-node)# exit` | Exits to the previous mode. |
| **Step 9** | **interface serial** *interface-path-id[.subinterface]*<br>**Example:**<br>`RP/0/RSP0/CPU0:router(config)# interface serial 0/1/0/0/1/1:0` | Physical interface or virtual interface.<br>**Note** • Use the **show interfaces** command to see a list of all interfaces currently configured on the router.<br>For more information about the syntax for the router, use the question mark (**?**) online help function. |
| **Step 10** | **ssrp group** *group-number* **id** *id-number* **ppp**<br>**Example:**<br>`RP/0/RSP0/CPU0:router(config-if)# ssrp group 1 id 1 ppp` | Attaches an SSRP group on the interface. |
| **Step 11** | **encapsulation ppp**<br>**Example:**<br>`RP/0/RSP0/CPU0:router(config-if)# encapsulation ppp` | Enables encapsulation for communication with routers using the Point-to-Point Protocol (PPP). |
| **Step 12** | **multilink**<br>**Example:**<br>`RP/0/RSP0/CPU0:router(config-if)# multilink` | Enters the multilink interface configuration mode. |
| **Step 13** | **group** *group-id*<br>**Example:**<br>`RP/0/RSP0/CPU0:router(config-if)# group 1` | Attaches a Session State Redundancy Protocol (SSRP) group to this interface. |
| **Step 14** | **exit**<br>**Example:** | Exits to the previous mode. |

| | Command or Action | Purpose |
|---|---|---|
| | `RP/0/RSP0/CPU0:router(config)# exit` | |
| **Step 15** | **keepalive disable**<br>**Example:**<br>`RP/0/RSP0/CPU0:router(config)# keepalive disable` | Disables the keepalive timer for this interface. |
| **Step 16** | **exit**<br>**Example:**<br>`RP/0/RSP0/CPU0:router(config-if)# exit` | Exits to the previous mode. |
| **Step 17** | **interface serial** *interface-path-id[.subinterface]*<br>**Example:**<br>`RP/0/RSP0/CPU0:router(config)# interface serial 0/1/0/0/1/2:0` | Physical interface or virtual interface.<br>**Note** • Use the **show interfaces** command to see a list of all interfaces currently configured on the router.<br>For more information about the syntax for the router, use the question mark (**?**) online help function. |
| **Step 18** | **ssrp group** *group-number* **id** *id-number* **ppp**<br>**Example:**<br>`RP/0/RSP0/CPU0:router(config-if)# ssrp group 1 id 2 ppp` | Attaches an SSRP group on the interface. |
| **Step 19** | **encapsulation ppp**<br>**Example:**<br>`RP/0/RSP0/CPU0:router(config-if)# encapsulation ppp` | Enables encapsulation for communication with routers using the Point-to-Point Protocol (PPP). |
| **Step 20** | **multilink**<br>**Example:**<br>`RP/0/RSP0/CPU0:router(config-if)# multilink` | Enters the multilink interface configuration mode. |
| **Step 21** | **group** *group-id*<br>**Example:**<br>`RP/0/RSP0/CPU0:router(config-if)# group 1` | Attaches a Session State Redundancy Protocol (SSRP) group to this interface. |
| **Step 22** | **exit**<br>**Example:**<br>`RP/0/RSP0/CPU0:router(config-if)# exit` | Exits to the previous mode. |

| | Command or Action | Purpose |
|---|---|---|
| **Step 23** | **keepalive disable**<br>**Example:**<br>`RP/0/RSP0/CPU0:router(config-if)# keepalive disable` | Disables the keepalive timer for this interface. |
| **Step 24** | **exit**<br>**Example:**<br>`RP/0/RSP0/CPU0:router(config-if)# exit` | Exits to the previous mode. |
| **Step 25** | **interface multilink** *interface-path-id*<br>**Example:**<br>`RP/0/RSP0/CPU0:router(config)# interface Multilink 0/1/0/0/1` | Physical interface or virtual interface.<br>**Note** • Use the **show interfaces** command to see a list of all interfaces currently configured on the router.<br>For more information about the syntax for the router, use the question mark (**?**) online help function. |
| **Step 26** | **ipv4 address** *ipv4-address mask*<br>**Example:**<br>`RP/0/RSP0/CPU0:router(config-if )# ipv4 address 10.10.10.10 255.255.255.0` | Sets the primary IPv4 address and subnet mask for an interface. |
| **Step 27** | **ssrp group** *group-number* **id** *id-number* **ppp**<br>**Example:**<br>`RP/0/RSP0/CPU0:router(config-if)# ssrp group 1 id 3 ppp` | Attaches an SSRP group on the interface. |
| **Step 28** | **encapsulation ppp**<br>**Example:**<br>`RP/0/RSP0/CPU0:router(config-if)# encapsulation ppp` | Enables encapsulation for communication with routers using the Point-to-Point Protocol (PPP). |
| **Step 29** | **shutdown**<br>**Example:**<br>`RP/0/RSP0/CPU0:router(config-if)# shutdown` | Brings the interface administratively down for configuration. |
| **Step 30** | **keepalive disable**<br>**Example:**<br>`RP/0/RSP0/CPU0:router(config-if)# keepalive disable` | Disables the keepalive timer for this interface. |

| | Command or Action | Purpose |
|---|---|---|
| **Step 31** | **exit**<br>**Example:**<br>`RP/0/RSP0/CPU0:router(config-if)# exit` | Exits to the previous mode. |
| **Step 32** | **controller MgmtMultilink** *interface-path-id*<br>**Example:**<br>`RP/0/RSP0/CPU0:router(config)# controller MgmtMultilink 0/1/0/0` | Configure a controller for a generic multilink bundle and enters MgmtMultilink configuration mode. |
| **Step 33** | **bundle** *bundleID*<br>**Example:**<br>`RP/0/RSP0/CPU0:router(config-mgmtmultilink)# bundle 1` | Creates a multilink interface bundle. |
| **Step 34** | **bundle** *bundleID*<br>**Example:**<br>`RP/0/RSP0/CPU0:router(config-mgmtmultilink)# bundle 2` | Creates a multilink interface bundle. |
| **Step 35** | **commit**<br>**Example:**<br>`RP/0/RSP0/CPU0:router(config-mgmtmultilink)# commit` | Saves the current configuration. |

# Configuration Examples for PPP

This section provides the following configuration examples:

## Configuring a POS Interface with PPP Encapsulation: Example

The following example shows how to create and configure a POS interface with PPP encapsulation:

```
RP/0/RSP0/CPU0:router# configure
RP/0/RSP0/CPU0:router(config)# interface POS 0/3/0/0
RP/0/RSP0/CPU0:router(config-if)# ipv4 address 172.18.189.38 255.255.255.224
RP/0/RSP0/CPU0:router(config-if)# encapsulation ppp
RP/0/RSP0/CPU0:router(config-if)# no shutdown
RP/0/RSP0/CPU0:router(config-if)# ppp pap sent-username P1_TEST-8 password xxxx
RP/0/RSP0/CPU0:router(config-if)# ppp authentication chap pap MIS-access
RP/0/RSP0/CPU0:router(config-if)# ppp chap password encrypted xxxx
RP/0/RSP0/CPU0:router(config-if)# end
```

```
Uncommitted changes found, commit them? [yes]: yes
```

The following example shows how to configure POS interface 0/3/0/1 to allow two additional retries after an initial authentication failure (for a total of three failed authentication attempts):

```
RP/0/RSP0/CPU0:router# configure
RP/0/RSP0/CPU0:router(config)# interface POS 0/3/0/1
RP/0/RSP0/CPU0:router(config-if)# ppp max-bad-auth 3
```

# Configuring a Serial Interface with PPP Encapsulation: Example

The following example shows how to create and configure a serial interface with PPP MS-CHAP encapsulation:

```
RP/0/RSP0/CPU0:router# configure
RP/0/RSP0/CPU0:router(config)# interface serial 0/3/0/0/0:0
RP/0/RSP0/CPU0:router(config-if)# ipv4 address 172.18.189.38 255.255.255.224
RP/0/RSP0/CPU0:router(config-if)# encapsulation ppp
RP/0/RSP0/CPU0:router(config-if)# no shutdown
RP/0/RSP0/CPU0:router(config-if)# ppp authentication ms-chap MIS-access
RP/0/RSP0/CPU0:router(config-if)# ppp ms-chap password encrypted xxxx
RP/0/RSP0/CPU0:router(config-if)# end
Uncommitted changes found, commit them? [yes]: yes
```

# Configuring MLPPP: Example

```
RP/0/RSP0/CPU0:router# configure
RP/0/RSP0/CPU0:router(config)# controller t3 0/1/0/0/1
RP/0/RSP0/CPU0:router# mode t1
RP/0/RSP0/CPU0:router(config-t3)# clock source internal
RP/0/RSP0/CPU0:router(config-t3)# exit
RP/0/RSP0/CPU0:router(config)# controller t1 0/1/0/0/1/1
RP/0/RSP0/CPU0:router(config-t1)# channel-group 0
RP/0/RSP0/CPU0:router(config-t1-channel_group)# timeslots 1-24
RP/0/RSP0/CPU0:router(config-t1-channel_group)# exit
RP/0/RSP0/CPU0:router(config-t1)# exit
RP/0/RSP0/CPU0:router(config)# controller mgmtmultilink 0/1/0/0
RP/0/RSP0/CPU0:router(config-mgmtmultilink)# bundle 20
RP/0/RSP0/CPU0:router(config-t3)# commit
RP/0/RSP0/CPU0:router(config-t3)# exit

RP/0/RSP0/CPU0:router(config)# interface multilink 0/1/0/0/20
RP/0/RSP0/CPU0:router(config-if)# ipv4 address 80.170.0.1/24
RP/0/RSP0/CPU0:router(config-if)# multilink fragment-size 128
RP/0/RSP0/CPU0:router(config-if)# keepalive disable
RP/0/RSP0/CPU0:router(config-if)# exit
RP/0/RSP0/CPU0:router(config)# interface serial 0/1/0/0/1/1:0
RP/0/RSP0/CPU0:router(config-if)# encapsulation ppp
RP/0/RSP0/CPU0:router(config-if)# multilink group 20
RP/0/RSP0/CPU0:router(config-t3)# commit
```

```
RP/0/RSP0/CPU0:router(config-t3)# exit

RP/0/RSP0/CPU0:router(config)# interface multilink 0/1/0/0/1
RP/0/RSP0/CPU0:router(config-if)# multilink
RP/0/RSP0/CPU0:router(config-if-multilink)# ppp multilink minimum-active links 10

RP/0/RSP0/CPU0:router(config-if-multilink)# multilink interleave
RP/0/RSP0/CPU0:router(config-if-mutlilink)# no shutdown
RP/0/RSP0/CPU0:router(config-t3)# commit
```

# ICSSO for PPP and MLPPP Configuration: Examples

This section provides the following examples of ICSSO configuration and related configurations:

## ICSSO Configuration: Example

The following example shows how to configure ICSSO on a SONET controller:

```
config
 redundancy
  multi-router aps
  group 1
  controller sonet 0/1/0/0
   member ipv4 10.10.10.10 backup-interface GigabitEthernet 0/6/0/1
   commit
show running config
```

## Channelized SONET Controller Configuration for Use with ICSSO: Example

The following example shows how to configure channelized SONET controllers for use with ICSSO:

```
config
 controller SONET0/7/1/0
  framing sonet
  sts 1
  mode t3
!
  sts 2
  mode t3
!
  sts 3
  mode t3
!
 controller T3 0/7/0/1
  mode t1
  framing auto-detect
!
 controller T1 0/7/0/1/1
  channel-group 0
  timeslots 1-24
```

# MR-APS Configuration: Example

The following example shows how to configure MR-APS:

```
config
 aps group 1
  channel 0 remote 99.10.1.2
  channel 1 local SONET0/1/0/0
!
 aps rprplus
!
 interface GigabitEthernet0/6/0/0
  description MR-APS PGP interface for aps group 1
  ipv4 address 99.10.1.1 255.255.255.0
```

The following example shows how to configure a redundancy group manager:

```
// mr-aps part:
aps group 1
 channel 0 remote 99.10.1.2
 channel 1 local SONET0/1/0/0
!
// ssrp part:
ssrp location 0/1/CPU0
 group 1 profile TEST
!
ssrp profile TEST
 peer ipv4 address 99.10.1.2
!
// redundancy group manager part:
redundancy
 multi-router aps
  group 1
   controller SONET0/1/0/0
    member ipv4 99.30.1.2 backup-interface GigabitEthernet0/6/0/4
   !

// ospf part:
router ospf 1
 nsr
 nsf ietf
 redistribute connected instance IPCP
 redistribute static
 area 0
  interface GigabitEthernet0/6/0/4
  !
 !
!

show redundancy-group multi-router aps
```

# SSRP on Serial and Multilink Interfaces Configuration: Example

The following example shows how to configure SSRP on serial interfaces with PPP encapsulation and multilink interfaces:

```
config
 ssrp profile TEST
  peer ipv4 address 99.10.1.2
```

```
!
 ssrp location 0/1/CPU0
  group 1 profile TEST
!
 interface Serial0/1/0/0/1/1:0
  ssrp group 1 id 1 ppp
  encapsulation ppp
  multilink
  group 1
!
 keepalive disable
!
 interface Serial0/1/0/0/1/2:0
  ssrp group 1 id 2 ppp
  encapsulation ppp
  multilink
  group 1
!
 keepalive disable
!
 interface Multilink0/1/0/0/1
  ipv4 address 51.1.1.1 255.255.255.0
  ssrp group 1 id 3 ppp
  encapsulation ppp
  shutdown
!
keepalive disable
!
 controller MgmtMultilink0/1/0/0
  bundle 1
```

**Note** For more information on configuring serial interfaces, refer to the Configuring Serial Interfaces, on page 591 module of this document.

For more information on configuring Multilink, refer to Configuring Multilink PPP.

# VRF on Multilink Configuration for Use with ICSSO: Example

The following example shows how to configure VPN Routing and Forwarding (VRF) on a Multilink interface for use with ICSSO:

```
config
 vrf EvDO-vrf
  address-family ipv4 unicast
!
 interface Multilink 0/0/0/0/1
  description To EvDO BTS Number 1
  vrf EvDO-vrf
  ipv4 address 150.0.1.3 255.255.255.0
  encapsulation ppp
!
```

**Note** For more information on configuring VRF, refer to the *Cisco ASR 9000 Series Aggregation Services Router Routing Configuration Guide*. For more information on configuring Multilink, refer to Configuring Multilink PPP.

# VRF on Ethernet Configuration for Use with ICSSO: Example

The following example shows how to configure VPN Routing and Forwarding (VRF) on an Ethernet interface for use with ICSSO:

```
config
 vrf EvDO-vrf
  address-family ipv4 unicast
!
 interface GigabitEthernet 1/0/0/0.20
  description Inter-ASR9000 EvDO VLAN
  vrf EvDO-vrf
  encapsulation dot1q 20
```

**Note** For more information on configuring VRF, refer to the *Cisco ASR 9000 Series Aggregation Services Router Routing Configuration Guide*. For more information on configuring Ethernet, refer to the Configuring Ethernet OAM, on page 139 module of this document.

# OSPF Configuration for Use with ICSSO: Example

Aggregation routers that terminate PPP sessions to a set of cell sites, advertise their availability to LAN switches using Open Shortest Path First (OSPF). The following example shows how to configure OSPF for use with ICSSO:

```
config
 router ospf 1
  nsr
  nsf ietf
  redistribute connected instance IPCP
  redistribute static
  area 0
 interface GigabitEthernet 0/6/0/1
!
```

**Note** For more information on configuring OSPF, refer to the *Cisco ASR 9000 Series Aggregation Services Router Routing Configuration Guide*.

# Verifying ICSSO Configuration: Examples

The following examples show how to verify ICSSO configuration:

## Verifying SSRP Groups: Example

The following example shows how to verify SSRP Group configuration:

```
RP/0/RSP0/CPU0:Router# show ssrp groups all det loc 0/1/cpu0

Tue Nov 10 16:57:55.911 UTC

Group ID: 1
  Conn (ACT,SB): UP,UP
  Profile:  TEST
  Peer:     99.10.1.2
  Max-hops: 255
  Sessions: 3
  Channels Created
  Client:            PPP
    Active Init:      TRUE
    Standby Init:     TRUE
    Active State:     IDT-End-Sent
    Standby State:    IDT-End-Received
    Auth-Req Pending: FALSE
    Active   ID Out:              93
    Active   ID In:               93
    Active   Last Reply In:       93
    Active   Counter:              5

    Standby  ID Out:              50
    Standby  ID In:               50
    Standby  Last Reply In:       50
    Standby  Counter:              5

    Session   Interface
    ----------------------------
    1         Se0/1/0/0/1/1:0
    2         Se0/1/0/0/1/2:0
    3         Mu0/1/0/0/1
```

## Verifying ICSSO Status: Example

The following example shows how to verify ICSSO status:

```
RP/0/RSP0/CPU0:Router# show ppp sso sum loc 0/1/cpu0
Tue Nov 10 16:59:00.253 UTC

Not-Ready    : The session is not yet ready to run as Active or Standby
Stby-UnNegd  : In Standby mode, no replication state received yet
Act-Down     : In Active mode, lower layer not yet up
Deactivating : Session was Active, now going Standby
Act-UnNegd   : In Active mode, not fully negotiated yet
Stby-Negd    : In Standby mode, replication state received and pre-programmed
Activating   : Session was Standby and pre-programmed, now going Active
Act-Negd     : In Active mode, fully negotiated and up
-            : This layer not running

                       Not-   Stby-  Act- Deactiv- Act-   Stby-  Activ- Act-
Layer        | Total  Ready  UnNegd Down   ating  UnNegd Negd   ating  Negd
```

```
-------------+------- ------ ------ ------ ------ ------ ------ ------ ------
LCP          |      6      0      0      0      0      0      0      0      6
of-us-auth   |      6      0      0      0      0      0      0      0      6
of-peer-auth |      6      0      0      0      0      0      0      0      6
IPCP         |      2      0      0      0      0      0      0      0      2
```

## Verifying MR-APS Configuration: Example

The following examples show how to verify MR-APS configuration:

### Example 1:

```
RP/0/RSP0/CPU0:Router# show redundancy-group multi-router aps all

Tue Nov 10 17:00:14.018 UTC

Interchassis Group: 1
             State: FRR ADD SENT
        Controller: SONET0/1/0/0                        0x2000080
  Backup Interface: GigabitEthernet0/6/0/1              0x10000180
  Next Hop IP Addr: 10.10.10.10

Interchassis Group: Not Configured
             State: WAIT CONFIG
        Controller: SONET0/1/0/1                        0x20003c0
  Backup Interface: None                                0x0
  Next Hop IP Addr: 0.0.0.0
```

### Example 2:

```
RP/0/RSP0/CPU0:Router# show cef adj rem loc 0/6/cpu0

Tue Nov 10 17:00:30.471 UTC
Display protocol is ipv4
Interface    Address                                        Type    Refcount

SO0/1/0/0    Ifhandle: 0x2000080                            remote  2
             Adjacency: PT:0xa47c9cf4
             Interface: SO0/1/0/0
             Interface Type: 0x0, Base Flags: 0x110000 (0xa4a00494)
             Nhinfo PT: 0xa4a00494, Idb PT: 0xa4cd60d8, If Handle: 0x2000080
             Ancestor If Handle: 0x0

             Protect FRR: 0xa4a8a040
             Backup FRR: 0xa4a89f34
             Backup NH: 0xa4a00a74
             Backup IFH: 0x10000180
             Backup Interface: Gi0/6/0/1
             Backup IP: 10.10.10.10

             FRR Active: 0
```

## Verifying OSPF Configuration: Example

The following examples show how to verify OSPF configuration:

**Example 1:**

```
RP/0/RSP0/CPU0:Router# show route back
Tue Nov 10 17:01:48.974 UTC

Codes: C - connected, S - static, R - RIP, B - BGP
       D - EIGRP, EX - EIGRP external, O - OSPF, IA - OSPF inter area
       N1 - OSPF NSSA external type 1, N2 - OSPF NSSA external type 2
       E1 - OSPF external type 1, E2 - OSPF external type 2, E - EGP
       i - ISIS, L1 - IS-IS level-1, L2 - IS-IS level-2
       ia - IS-IS inter area, su - IS-IS summary null, * - candidate default
       U - per-user static route, o - ODR, L - local, G  - DAGR
       A - access/subscriber

C    51.1.1.2/32 is directly connected, 00:10:03, Multilink0/1/0/0/1
                 Backup  O E2 [110/20] via 10.10.10.10, GigabitEthernet0/6/0/1
C    52.1.1.2/32 is directly connected, 00:11:47, Multilink0/1/0/0/2
                 Backup  O E2 [110/20] via 10.10.10.10, GigabitEthernet0/6/0/1
S    110.0.0.2/32 [1/0] via 51.1.1.2, 00:11:40
                 Backup  O E2 [110/20] via 10.10.10.10, GigabitEthernet0/6/0/1
```

**Example 2:**

```
RP/0/RSP0/CPU0:Router# show route 51.1.1.2
Tue Nov 10 17:02:26.507 UTC

Routing entry for 51.1.1.2/32
  Known via "connected IPCP", distance 0, metric 0 (connected)
  Installed Nov 10 16:51:45.703 for 00:10:40
  Routing Descriptor Blocks
    51.1.1.2 directly connected, via Multilink0/1/0/0/1
      Route metric is 0
  No advertising protos.
```

# Verifying Multilink PPP Configurations

Use the following show commands to verify and troubleshoot your multilink configurations:

CHAPTER 20

# Configuring 802.1Q VLAN Interfaces

This module describes the configuration and management of 802.1Q VLAN interfaces.

The IEEE 802.1Q specification establishes a standard method for tagging Ethernet frames with VLAN membership information, and defines the operation of VLAN bridges that permit the definition, operation, and administration of VLAN topologies within a bridged LAN infrastructure.

The 802.1Q standard is intended to address the problem of how to divide large networks into smaller parts so broadcast and multicast traffic does not use more bandwidth than necessary. The standard also helps provide a higher level of security between segments of internal networks.

#### Feature History for Configuring 802.1Q VLAN Interfaces

| Release | Modification |
|---|---|
| Release 3.7.2 | This feature was introduced on the Cisco ASR 9000 Series Router. |
| Release 3.9.0 | Layer 2 dot1q was updated. Encapsulation dot1q was added. |


- Prerequisites for Configuring 802.1Q VLAN Interfaces, on page 707
- Information About Configuring 802.1Q VLAN Interfaces, on page 708
- How to Configure 802.1Q VLAN Interfaces, on page 710
- Configuration Examples for VLAN Interfaces, on page 717


## Prerequisites for Configuring 802.1Q VLAN Interfaces

You must be in a user group associated with a task group that includes the proper task IDs. The command reference guides include the task IDs required for each command. If you suspect user group assignment is preventing you from using a command, contact your AAA administrator for assistance.

Before configuring 802.1Q VLAN interfaces, be sure that the following conditions are met:

- You must have configured a Gigabit Ethernet interface, a 10-Gigabit Ethernet interface, or an Ethernet bundle interface.

# Information About Configuring 802.1Q VLAN Interfaces

To configure 802.1Q VLAN interfaces, you must understand the following concepts:

## 802.1Q VLAN Overview

A VLAN is a group of devices on one or more LANs that are configured so that they can communicate as if they were attached to the same wire, when in fact they are located on a number of different LAN segments. Because VLANs are based on logical instead of physical connections, they are very flexible for user and host management, bandwidth allocation, and resource optimization.

The IEEE 802.1Q protocol standard addresses the problem of dividing large networks into smaller parts so broadcast and multicast traffic does not consume more bandwidth than necessary. The standard also helps provide a higher level of security between segments of internal networks.

The 802.1Q specification establishes a standard method for inserting VLAN membership information into Ethernet frames.

Cisco IOS XR software supports VLAN subinterface configuration on Gigabit Ethernet and10-Gigabit Ethernet interfaces.

### 802.1Q Tagged Frames

The IEEE 802.1Q tag-based VLAN uses an extra tag in the MAC header to identify the VLAN membership of a frame across bridges. This tag is used for VLAN and quality of service (QoS) priority identification. The VLANs can be created statically by manual entry or dynamically through Generic Attribute Registration Protocol (GARP) VLAN Registration Protocol (GVRP). The VLAN ID associates a frame with a specific VLAN and provides the information that switches must process the frame across the network. A tagged frame is four bytes longer than an untagged frame and contains two bytes of Tag Protocol Identifier (TPID) residing within the type and length field of the Ethernet frame and two bytes of Tag Control Information (TCI) which starts after the source address field of the Ethernet frame.

## CFM on 802.1Q VLAN Interfaces

Configuring Connectivity Fault Management (CFM) for monitoring 802.1Q VLAN interfaces is identical to configuring CFM for monitoring Ethernet interfaces.

For information on configuring CFM for Ethernet interfaces, refer to the following sections in the Configuring Ethernet OAM, on page 139 module:

## Subinterfaces

Subinterfaces are logical interfaces created on a hardware interface. These software-defined interfaces allow for segregation of traffic into separate logical channels on a single hardware interface as well as allowing for better utilization of the available bandwidth on the physical interface.

Subinterfaces are distinguished from one another by adding an extension on the end of the interface name and designation. For instance, the Ethernet subinterface 23 on the physical interface designated TenGigE 0/1/0/0 would be indicated by TenGigE 0/1/0/0.23.

Before a subinterface is allowed to pass traffic it must have a valid tagging protocol encapsulation and VLAN identifier assigned. All Ethernet subinterfaces always default to the 802.1Q VLAN encapsulation. However, the VLAN identifier must be explicitly defined.

# Subinterface MTU

The subinterface maximum transmission unit (MTU) is inherited from the physical interface with an additional four bytes allowed for the 802.1Q VLAN tag.

# Native VLAN

The Cisco ASR 9000 Series Router does not support a native VLAN. However, the equivalent functionality is accomplished using an **encapsulation** command as follows:

```
encapsulation dot1q TAG-ID, untagged
```

# EFPs

An Ethernet Flow Point (EFP) is a Metro Ethernet Forum (MEF) term describing abstract router architecture. On the Cisco ASR 9000 Series Router, an EFP is implemented by an L2 subinterface with a VLAN encapsulation. The term EFP is used synonymously with an VLAN tagged L2 subinterface.

# Layer 2 VPN on VLANs

The Layer 2 Virtual Private Network (L2VPN) feature enables Service Providers (SPs) to provide Layer 2 services to geographically disparate customer sites.

The configuration model for configuring VLAN attachment circuits (ACs) is similar to the model used for configuring basic VLANs, where the user first creates a VLAN subinterface, and then configures that VLAN in subinterface configuration mode. To create an AC, you need to include the **l2transport** keyword in the **interface** command string to specify that the interface is a Layer 2 interface.

VLAN ACs support three modes of L2VPN operation:

- Basic Dot1Q AC—The AC covers all frames that are received and sent with a specific VLAN tag.
- QinQ AC—The AC covers all frames received and sent with a specific outer VLAN tag and a specific inner VLAN tag. QinQ is an extension to Dot1Q that uses a stack of two tags.
- Q-in-Any AC—The AC covers all frames received and sent with a specific outer VLAN tag and any inner VLAN tag, as long as that inner VLAN tag is not L3 terminated. Q-in-Any is an extension to QinQ that uses wildcarding to match any second tag.

**Note** The Q-in-Any mode is a variation of the basic Dot1Q mode. In Q-in-Any mode, the frames have a basic QinQ encapsulation; however, in Q-in-Any mode the inner tag is not relevant, except for the fact that a few specific inner VLAN tags are siphoned for specific services. For example, a tag may be used to provide L3 services for general internet access.

Each VLAN on a CE-to-PE link can be configured as a separate L2VPN connection (using either VC type 4 or VC type 5). To configure L2VPN on VLANs, see the Configuring an Attachment Circuit on a VLAN section.

Keep the following in mind when configuring L2VPN on a VLAN:

- Cisco IOS XR software supports 4k ACs per LC.
- In a point-to-point connection, the two ACs do not have to be of the same type. For example, a port mode Ethernet AC can be connected to a Dot1Q Ethernet AC.
- Pseudowires can run in VLAN mode or in port mode. A pseudowire running in VLAN mode has a single Dot1Q tag, while a pseudo-wire running in port mode has no tags. Some interworking is required to connect these different types of circuits together. This interworking takes the form of popping, pushing, and rewriting tags. The advantage of Layer 2 VPN is that is simplifies the interworking required to connect completely different media types together.
- The ACs on either side of an MPLS pseudowire can be different types. In this case, the appropriate conversion is carried out at one or both ends of the AC to pseudowire connection.

Use the **show interfaces** command to display AC and pseudowire information.

**Note** For detailed information about configuring an L2VPN network, see the "*Implementing MPLS Layer 2* VPNs" *VPNs*module of the *Cisco IOS XR*

## Other Layer 2 VPN Features

For information on the following Layer 2 VPN features, refer to the *Cisco ASR 9000 Series Aggregation Services Router L2VPN and Ethernet Services Configuration Guide* and the *Cisco ASR 9000 Series Aggregation Services Router L2VPN and Ethernet Services Command Reference*:

- Provider Backbone Bridge (PBB) 802.1ah
- Policy-Based Forwarding (PBF)
- MVRP 802.1 (MVRP-lite)

# How to Configure 802.1Q VLAN Interfaces

This section contains the following procedures:

# Configuring 802.1Q VLAN Subinterfaces

This task explains how to configure 802.1Q VLAN subinterfaces. To remove these subinterfaces, see the "Removing an 802.1Q VLAN Subinterface" section.

## SUMMARY STEPS

1. **configure**
2. **interface {GigabitEthernet | TenGigE | Bundle-Ether}** *interface-path-id.subinterface*
3. **encapsulation dot1q**
4. **ipv4 address** *ip-address mask*
5. **exit**
6. Repeat Step 2 through Step 5 to define the rest of the VLAN subinterfaces.
7. **end** or **commit**
8. **show ethernet trunk bundle-ether** *instance*
9. **show vlan interface** [*type interface-path-id*][**location** *instance*]
10. **show vlan trunks** [**brief**] [**location** *instance*] [{**GigabitEthernet** | **TenGigE** | **Bundle-Ether** | } *interface-path-id*] [**summary**]

## DETAILED STEPS

| | Command or Action | Purpose |
|---|---|---|
| **Step 1** | **configure**<br>**Example:**<br>`RP/0/RSP0/CPU0:router# configure` | Enters global configuration mode. |
| **Step 2** | **interface {GigabitEthernet \| TenGigE \| Bundle-Ether}** *interface-path-id.subinterface*<br>**Example:**<br>`RP/0/RSP0/CPU0:router(config)# interface TenGigE 0/2/0/4.10` | Enters subinterface configuration mode and specifies the interface type, location, and subinterface number.<br>• Replace the *interface-path-id* argument with one of the following instances:<br>• Physical Ethernet interface instance, or with an Ethernet bundle instance. Naming notation is *rack*/*slot*/*module*/*port*, and a slash between values is required as part of the notation.<br>• Ethernet bundle instance. Range is from 1 through 65535.<br>• Replace the *subinterface* argument with the subinterface value. Range is from 0 through 4095.<br>• Naming notation is *interface-path-id.subinterface*, and a period between arguments is required as part of the notation. |
| **Step 3** | **encapsulation dot1q**<br>**Example:** | Sets the Layer 2 encapsulation of an interface. |

| | Command or Action | Purpose |
|---|---|---|
| | `RP/0/RSP0/CPU0:router(config-subif)# encapsulation dot1q 100, untagged` | **Note** • The **dot1q vlan** command is replaced by the **encapsulation dot1q** command on the Cisco ASR 9000 Series Router. It is still available for backward-compatibility, but only for Layer 3 interfaces. |
| **Step 4** | **ipv4 address** *ip-address mask*<br>**Example:**<br>`RP/0/RSP0/CPU0:router(config-subif)# ipv4 address 178.18.169.23/24` | Assigns an IP address and subnet mask to the subinterface.<br>• Replace *ip-address* with the primary IPv4 address for an interface.<br>• Replace *mask* with the mask for the associated IP subnet. The network mask can be specified in either of two ways:<br>• The network mask can be a four-part dotted decimal address. For example, 255.0.0.0 indicates that each bit equal to 1 means that the corresponding address bit belongs to the network address.<br>• The network mask can be indicated as a slash (/) and number. For example, /8 indicates that the first 8 bits of the mask are ones, and the corresponding bits of the address are network address. |
| **Step 5** | **exit**<br>**Example:**<br>`RP/0/RSP0/CPU0:router(config-subif)# exit` | (Optional) Exits the subinterface configuration mode.<br>• The **exit** command is not explicitly required. |
| **Step 6** | Repeat Step 2 through Step 5 to define the rest of the VLAN subinterfaces. | — |
| **Step 7** | **end** or **commit**<br>**Example:**<br>`RP/0/RSP0/CPU0:router(config)# end`<br>or<br>`RP/0/RSP0/CPU0:router(config)# commit` | Saves configuration changes.<br>• When you issue the **end** command, the system prompts you to commit changes:<br>`Uncommitted changes found, commit them before exiting(yes/no/cancel)? [cancel]:`<br>- Entering **yes** saves configuration changes to the running configuration file, exits the configuration session, and returns the router to EXEC mode.<br>- Entering **no** exits the configuration session and returns the router to EXEC mode without committing the configuration changes.<br>- Entering **cancel** leaves the router in the current configuration session without exiting or committing the configuration changes. |

| | Command or Action | Purpose |
|---|---|---|
| | | • Use the **commit** command to save the configuration changes to the running configuration file and remain within the configuration session. |
| **Step 8** | **show ethernet trunk bundle-ether** *instance*<br>**Example:**<br>`RP/0/RSP0/CPU0:router# show ethernet trunk bundle-ether 5` | (Optional) Displays the interface configuration.<br>The Ethernet bundle instance range is from 1 through 65535. |
| **Step 9** | **show vlan interface** [*type interface-path-id*][**location** *instance*]<br>**Example:**<br>`RP/0//CPU0:router# show vlan interface 5` | (Optional) Displays the interface configuration.<br>• To display the configuration for a particular port, use the **location** keyword.<br>• To display the configuration for the specified interface or subinterface, use the **interface** keyword. |
| **Step 10** | **show vlan trunks** [**brief**] [**location** *instance*] [{**GigabitEthernet** \| **TenGigE** \| **Bundle-Ether** \| } *interface-path-id*] [**summary**]<br>**Example:**<br>`RP/0//CPU0:router# show vlan trunk summary` | (Optional) Displays summary information about each of the VLAN trunk interfaces.<br>• The keywords have the following meanings:<br>• **brief**—Displays a brief summary.<br>• **summary**—Displays a full summary.<br>• **location**—Displays information about the VLAN trunk interface on the given port.<br>• **interface**—Displays information about the specified interface or subinterface. |

# Configuring an Attachment Circuit on a VLAN

Use the following procedure to configure an attachment circuit on a VLAN.

### SUMMARY STEPS

1. **configure**
2. **interface [GigabitEthernet | TenGigE | Bundle-Ether | TenGigE]** *interface-path*] *id.subinterface* **l2transport**
3. 
4. **l2protocol cpsv** {**tunnel** | **reverse-tunnel**}
5. **end** or **commit**
6. **show interfaces** [**GigabitEthernet** | **TenGigE**] *interface-path-id.subinterface*

## DETAILED STEPS

| | Command or Action | Purpose |
|---|---|---|
| **Step 1** | **configure**<br>**Example:**<br>`RP/0/RSP0/CPU0:router# configure terminal` | Enters global configuration mode. |
| **Step 2** | **interface [GigabitEthernet \| TenGigE \| Bundle-Ether \| TenGigE]** *interface-path*] *id.subinterface* **l2transport**<br>**Example:**<br>`RP/0/RSP0/CPU0:router(config)# interface TenGigE 0/1/0/0.1 l2transport` | Enters subinterface configuration and specifies the interface type, location, and subinterface number.<br>• Replace the argument with one of the following instances:<br>• Physical Ethernet interface instance, or with an Ethernet bundle instance. Naming notation is *rack*/*slot*/*module*/*port*, and a slash between values is required as part of the notation.<br>• Ethernet bundle instance. Range is from 1 through 65535.<br>• Replace the *subinterface* argument with the subinterface value. Range is from 0 through 4095.<br>• Naming notation is *instance.subinterface*, and a period between arguments is required as part of the notation.<br>• You must include the **l2transport** keyword in the command string; otherwise, the configuration creates a Layer 3 subinterface rather that an AC. |
| **Step 3** | **Example:**<br>`RP/0/RSP0/CPU0:router(config-subif)# encapsulation dot1q 100, untagged` | Sets the Layer 2 encapsulation of an interface.<br>**Note** • The **dot1q vlan** command is replaced by the **encapsulation dot1q** command on the Cisco ASR 9000 Series Router. It is still available for backward-compatibility, but only for Layer 3 interfaces. |
| **Step 4** | **l2protocol cpsv** {**tunnel** \| **reverse-tunnel**}<br>**Example:**<br>`RP/0/RSP0/CPU0:router(config-if-l2)# l2protocol cpsv tunnel` | Configures Layer 2 protocol tunneling and protocol data unit (PDU) filtering on an Ethernet interface for the following protocols: CDP, PVST+, STP, VTP, where:<br>• **tunnel**—Specifies L2PT encapsulation on frames as they enter the interface, and de-encapsulation on frames as they exit they interface.<br>• **reverse-tunnel**—Specifies L2PT encapsulation on frames as they exit the interface, and de-encapsulation on frames as they enter the interface. |
| **Step 5** | **end** or **commit** | Saves configuration changes. |

| | Command or Action | Purpose |
|---|---|---|
| | **Example:**<br>`RP/0/RSP0/CPU0:router(config-if-l2)# end`<br>or<br>`RP/0/RSP0/CPU0:router(config-if-l2)# commit` | • When you issue the **end** command, the system prompts you to commit changes:<br>`Uncommitted changes found, commit them before exiting(yes/no/cancel)? [cancel]:`<br>- Entering **yes** saves configuration changes to the running configuration file, exits the configuration session, and returns the router to EXEC mode.<br>- Entering **no** exits the configuration session and returns the router to EXEC mode without committing the configuration changes.<br>- Entering **cancel** leaves the router in the current configuration session without exiting or committing the configuration changes.<br>• Use the **commit** command to save the configuration changes to the running configuration file and remain within the configuration session. |
| **Step 6** | **show interfaces** [**GigabitEthernet** \| **TenGigE**] *interface-path-id.subinterface*<br>**Example:**<br>`RP/0/RSP0/CPU0:router# show interfaces TenGigE 0/3/0/0.1` | (Optional) Displays statistics for interfaces on the router. |

### What to do next

- To configure a point-to-point pseudowire cross connect on the AC, see the “Implementing MPLS Layer 2 VPNs” VPNs module of the Cisco ASR 9000 Series Router Multiprotocol Label Switching Configuration Guide.
- To attach Layer 3 service policies, such as Multiprotocol Label Switching (MPLS) or Quality of Service (QoS), to the VLAN, refer to the appropriate Cisco ASR 9000 Series Router software configuration guide.

# Removing an 802.1Q VLAN Subinterface

This task explains how to remove 802.1Q VLAN subinterfaces that have been previously configured using the Configuring 802.1Q VLAN subinterfaces section in this module.

### SUMMARY STEPS

1. **configure**
2. **no interface** {**GigabitEthernet** | **TenGigE** | **Bundle-Ether**] *interface-path-id.subinterface*
3. Repeat Step 2 to remove other VLAN subinterfaces.

4. **end** or **commit**
5. **show vlan interface** [{**GigabitEthernet** | **TenGigE** | **Bundle-Ether**} *interface-path-id* | **location** *instance*]

## DETAILED STEPS

| | Command or Action | Purpose |
|---|---|---|
| **Step 1** | **configure**<br>**Example:**<br>`RP/0/RSP0/CPU0:router# configure` | Enters global configuration mode. |
| **Step 2** | **no interface** {**GigabitEthernet** \| **TenGigE** \| **Bundle-Ether**] *interface-path-id.subinterface*<br>**Example:**<br>`RP/0/RSP0/CPU0:router(config)# no interface TenGigE 0/2/0/4.10` | Removes the subinterface, which also automatically deletes all the configuration applied to the subinterface.<br>• Replace the *instance* argument with one of the following instances:<br>• Physical Ethernet interface instance, or with an Ethernet bundle instance. Naming notation is *rack*/*slot*/*module*/*port*, and a slash between values is required as part of the notation.<br>• Ethernet bundle instance. Range is from 1 through 65535.<br>• Replace the *subinterface* argument with the subinterface value. Range is from 0 through 4095.<br>Naming notation is *instance.subinterface*, and a period between arguments is required as part of the notation. |
| **Step 3** | Repeat Step 2 to remove other VLAN subinterfaces. | — |
| **Step 4** | **end** or **commit**<br>**Example:**<br>`RP/0/RSP0/CPU0:router(config)# end`<br>or<br>`RP/0/RSP0/CPU0:router(config)# commit` | Saves configuration changes.<br>• When you issue the **end** command, the system prompts you to commit changes:<br>`Uncommitted changes found, commit them before exiting(yes/no/cancel)? [cancel]:`<br>- Entering **yes** saves configuration changes to the running configuration file, exits the configuration session, and returns the router to EXEC mode.<br>- Entering **no** exits the configuration session and returns the router to EXEC mode without committing the configuration changes.<br>- Entering **cancel** leaves the router in the current configuration session without exiting or committing the configuration changes. |

| | Command or Action | Purpose |
|---|---|---|
| | | • Use the **commit** command to save the configuration changes to the running configuration file and remain within the configuration session. |
| **Step 5** | **show vlan interface** [{**GigabitEthernet** \| **TenGigE** \| **Bundle-Ether**} *interface-path-id* \| **location** *instance*]<br>**Example:**<br>`RP/0//CPU0:router# show vlan trunk summary` | (Optional) Displays the interface configuration.<br>• To display the configuration for a port, use the **location** keyword.<br>• To display the configuration for the specified interface or subinterface, use the **interface** keyword. |

# Configuration Examples for VLAN Interfaces

This section contains the following example:

## VLAN Subinterfaces: Example

The following example shows how to create three VLAN subinterfaces at one time:

```
RP/0/RSP0/CPU0:router# configure
RP/0/RSP0/CPU0:router(config)# interface TenGigE 0/2/0/4.1

RP/0/RSP0/CPU0:router(config-subif)# encapsulation dot1q 100
RP/0/RSP0/CPU0:router(config-subif)# ipv4 address 10.0.10.1/24
RP/0/RSP0/CPU0:router(config-subif)# interface TenGigE0/2/0/4.2

RP/0/RSP0/CPU0:router(config-subif)# encapsulation dot1q 101
RP/0/RSP0/CPU0:router(config-subif)# ipv4 address 10.0.20.1/24
RP/0/RSP0/CPU0:router(config-subif)# interface TenGigE0/2/0/4.3

RP/0/RSP0/CPU0:router(config-subif)# encapsulation dot1q 102
RP/0/RSP0/CPU0:router(config-subif)# ipv4 address 10.0.30.1/24
RP/0/RSP0/CPU0:router(config-subif)# commit
RP/0/RSP0/CPU0:router(config-subif)# exit
RP/0/RSP0/CPU0:router(config)# exit

RP/0/RSP0/CPU0:router# show ethernet trunk bundle-Ether 1
Trunk                              Sub types        Sub states
VLAN trunks: 1,
  1 are 802.1Q (Ether)
Sub-interfaces: 3,
  3 are up.
802.1Q VLANs: 3,
  3 have VLAN Ids,

RP/0//CPU0:router# show vlan interfaceInterface     St Ly    MTU    Subs       L2
  L3       Up    Down  Ad-Down
Te0/2/0/4.1         802.1Q             10  up
Te0/2/0/4.2         802.1Q             20  up
```

```
Te0/2/0/4.3         802.1Q              30  up
RP/0//CPU0:router# show vlan trunks briefBE1          Up L3   1514    1000        0
    1000     1000       0       0

Summary                       1000        0    1000     1000       0       0

Te0/2/0/4           802.1Q (Ether)        up
```

The following example shows how to create two VLAN subinterfaces on an Ethernet bundle:

```
RP/0/RSP0/CPU0:router# configure
RP/0/RSP0/CPU0:router(config)# interface bundle-ether 2
RP/0/RSP0/CPU0:router(config-if)# ipv4 address 192.168.2.1/24
RP/0/RSP0/CPU0:router(config-if)# exit
RP/0/RSP0/CPU0:router(config)# interface bundle-ether 2.1

RP/0/RSP0/CPU0:router(config-subif)# encapsulation dot1q 100
RP/0/RSP0/CPU0:router(config-subif)# ipv4 address 192.168.100.1/24
RP/0/RSP0/CPU0:router(config-subif)# exit
RP/0/RSP0/CPU0:router(config)# interface bundle-ether 2.2

RP/0/RSP0/CPU0:router(config-subif)# encapsulation dot1q 200
RP/0/RSP0/CPU0:router(config-subif)# ipv4 address 192.168.200.1/24
RP/0/RSP0/CPU0:router(config-subif)# exit
RP/0/RSP0/CPU0:router(config)# commit
```

The following example shows how to create a basic dot1Q AC:

```
RP/0/RSP0/CPU0:router# configure
RP/0/RSP0/CPU0:router(config)# interface GigabitEthernet 0/0/0/0.1
RP/0/RSP0/CPU0:router(config-subif)# l2transport

RP/0/RSP0/CPU0:router(config-subif)# encapsulation dot1q 100
RP/0/RSP0/CPU0:router(config-subif)# commit
RP/0/RSP0/CPU0:router(config-subif)# exit
RP/0/RSP0/CPU0:router(config)# exit
```

The following example shows how to create a Q-in-Q AC:

```
RP/0/RSP0/CPU0:router# configure
RP/0/RSP0/CPU0:router(config)# interface GigabitEthernet 0/0/0/0.2
RP/0/RSP0/CPU0:router(config-subif)# l2transport

RP/0/RSP0/CPU0:router(config-subif)#
RP/0/RSP0/CPU0:router(config-subif)# commit
RP/0/RSP0/CPU0:router(config-subif)# exit
RP/0/RSP0/CPU0:router(config)# exit
```

The following example shows how to create a Q-in-Any AC:

```
RP/0/RSP0/CPU0:router# configure
```

```
RP/0/RSP0/CPU0:router(config)# interface GigabitEthernet 0/0/0/0.3
RP/0/RSP0/CPU0:router(config-subif)# l2transport
RP/0/0/CPU0:router(config-subif)# dot1q vlan 30 vlan any
RP/0/RSP0/CPU0:router(config-subif)# encapsulation dot1q 300 second-dot1q any
RP/0/RSP0/CPU0:router(config-subif)# commit
RP/0/RSP0/CPU0:router(config-subif)# exit
RP/0/RSP0/CPU0:router(config)# exit
```

CHAPTER 21

# Configuring Virtual Services

This module describes the configuration of virtual services.

**Feature History for Configuring a Virtual Service on the Cisco ASR 9000 Series Router**

| Release | Modification |
|---|---|
| Release 5.1.1 | • Support for virtual services was added on the Cisco ASR 9000 Series Router. |


- Prerequisites for Configuring Virtual Services, on page 721
- Restrictions for Configuring Virtual Services, on page 722
- Information about Configuring Virtual Services, on page 722
- How to Configure a Virtual Service, on page 724
- Configuration Examples for a Virtual Service, on page 732


# Prerequisites for Configuring Virtual Services

You must be in a user group associated with a task group that includes the proper task IDs. The command reference guides include the task IDs required for each command. If you suspect user group assignment is preventing you from using a command, contact your AAA administrator for assistance.

Before configuring virtual services, you must have the following hardware and software installed on the Cisco ASR 9000 Series Router:

- Hardware — Cisco ASR 9000 Series Aggregation Services Router (ASR90xx and ASR99xx) with Cisco ASR 9000 Virtualized Service Module (VSM) Card installed.

  **Note** The Cisco ASR 9000 VSM Card is not supported on the Cisco Aggregation Services Router ASR9001 Router.

- Software — Cisco IOS XR Software Release 5.1.1 or later.

For more information about other hardware requirements, see *Cisco ASR 9000 Series Aggregation Services Router Hardware Installation Guide*.

For more information about the Cisco ASR 9000 VSM Card, see *Cisco ASR 9000 Aggregation Services Router VSM (Virtualized Service Module) Service Card Installation Guide.*

# Restrictions for Configuring Virtual Services

- The Cisco ASR 9000 VSM Card is not supported on the Cisco Aggregation Services Router ASR9001 Router.
- The Cisco ASR 9000 VSM Card is supported with RSP3 Route Processor only.
- The front panel ports on the Cisco ASR 9000 VSM Card are not supported in Cisco IOS XR Software Release 5.1.1.
- In Cisco IOS XR Software Release 5.1.1 CGv6 is the application virtual machine (VM) running on the Cisco ASR 9000 VSM Card. On a given Cisco ASR 9000 VSM Card, only one CGv6 VM can run at a time.

# Information about Configuring Virtual Services

The Cisco ASR 9000 VSM Card is a service card built specifically for the ASR9000 platform. The Cisco ASR 9000 VSM Card is supported in any slot on the Cisco ASR 9000 Series Aggregation Services Router (ASR90xx and ASR99xx). In Cisco IOS XR Software Release 5.1.1 the Cisco ASR 9000 VSM Card allows the CGv6 NAT44 application to be hosted on top of a virtualized hardware environment.

## Service Enablement

Service Enablement provides the ability to install and uninstall a service without impacting the other services running on the Cisco ASR 9000 VSM Card. Service enablement allows the user to instantiate a service instance by specifying the name and location of the service image package and the target for where the service needs to be instantiated. In Cisco IOS XR Software Release 5.1.1, service enablement allows the user to select a service to be provisioned and the associated parameters using CLI.

The service enablement feature is not enabled by default. Use the **virtual-service enable** command to enable the service enablement feature. Use the **no** form of the command to remove all of the configurations related to the given virtual service. The user can only use the **no** form of the **virtual-service enable** command if all the virtual services that were defined and instantiated have been removed from the router.

## Virtual Service Package

The Service Manager orchestrates the installation, creation, instantiation, management and termination of services. The Service Manager supports the open standard OVF packaging model (http://www/dmtf/org/standards/ovf) for the service package. OVF is an open standard for describing virtual appliances and is widely used to distribute virtual appliances. The OVF package for virtual appliances used for Cisco platforms is based on the OVF standard but is not 100 % compatible with OVF standard.

The Open Virtualization Archive (OVA) is a software package that contains the application and metafiles used to create the hosting environment. The OVA package has a .OVA extension and is a tar of the following files:

- One OVA descriptor file(.xml)—The OVA descriptor file is an XML file that defines the content and requirements of the packaged service. However, instead of using standard OVA envelop (.ova), Libvirt XML format (.xml) is used because Libvirt is used for virtualization infrastructure support and it requires a Libvirt XML file instead of OVA XML. In order to support other virtualization infrastructures in future, especially for service deployment on external servers, this file will also contain the information about the type of the virtualization infrastructure the rest of the contents are defined for. This file is mandatory.
- One OVA manifest file(.mf)—As per OVF standard, zero or one manifest file containing the SHA-2 digests of the individual files in the OVA package. This file is mandatory.
- One package version file (.ver)—The package version file contains the IOS-XR virtualization framework version that a given virtual application is compatible with. This file is not mandatory per OVF standard. However, this is mandated for OVA packages installed on Cisco platforms, and allows different application versions to work seamlessly with a given IOS-XR package version.
- One OVA metadata file (.env)—The metadata file contains information such as signing algorithm, signature, X-509 certificate and so on. The signature of the digest is stored along with base64-encoded X.509 certificate in the signature envelop file (.env). This file is not mandatory.
- Zero to many disk image files—These files represent the virtual disks that support the defined virtual image(s) or service. More generally, the package includes artefacts needed by the service, including virtual disks, localized language resources, and other artefacts. Typical disk format options for KVM/QEMU are vmdk, qcow2, iso and raw formats. ISO disk format may also be used for IOS-XR Services. This file is not mandatory.
- Zero to many file systems—These files represent the file systems such as the USB file system that is synchronized to standby RSP. This file is not mandatory.

**Note** In Cisco IOS XR Release 5.1.1, package authenticity, disk image files, and file systems are not supported.

The first step in service creation is to install the virtual service package. The virtual service package installation involves unpacking the virtual service package and downloading the ISO image and data disks onto the target where the virtual service is to be installed and activated. A given virtual service can be installed on one or more Cisco ASR 9000 VSM Cards. Once a virtual service is installed, it needs to be provisioned and activated. Any platform specific configuration needed can be performed before activating the service.

The steps for installing a service consist of:

1. Service Manager receives CLI command to install a given service. Service Manager downloads, if needed, the OVA package.
2. Service Manager stores the OVA package on local hard disk, and unpacks it. Service Manager checks the compatibility between the minimum IOS-XR version the service requires mentioned in the version file and the running IOS-XR version. Service Manager then proceeds with the installation on the target nodes.
3. Service Manager informs the Lead Install to install the service package on a list of target nodes. Lead Install pulls the ISO image and other hard disk images given in the OVA package.
4. Lead Install stores the ISO image and other hard disk images onto the local storage. Lead Install broadcasts to install in all sys admin instances with a list of sys admin instances that need to install these images. Lead Install will specify the multicast group to join to receive the images. Install on the targeted sys admin instances joins the multicast group.

5. Lead Install multicasts the images. Install in sys admin instances that join the multicast group receives the images.
6. The install stores the ISO image in the boot partition and creates the data partition to store the other hard disk images.

**Note** The flow above is specified for installing a given service package on multiple destination nodes with a single CLI command. However, in IOS XR Release 5.1.1, the CLI command takes only single location. In IOS XR Release 5.1.1 a given virtual service package can only be installed on a single location.

# How to Configure a Virtual Service

This section includes the following configuration tasks:

## Enabling the Service Enablement Feature

To enable the Service Enablement feature, complete the following steps:

### SUMMARY STEPS

1. **configure**
2. **virtual-service enable**
3. **end** or **commit**

### DETAILED STEPS

| | Command or Action | Purpose |
|---|---|---|
| **Step 1** | **configure**<br>**Example:**<br>`RP/0/RSP0/CPU0:router#configure` | Enters global configuration mode. |
| **Step 2** | **virtual-service enable**<br>**Example:**<br>`RP/0/RSP0/CPU0:router(config)#`<br>`virtual-service enable` | Enables the virtual service. |
| **Step 3** | **end** or **commit**<br>**Example:**<br>`RP/0/RSP0/CPU0:router(config)#end`<br>or<br>`RP/0/RSP0/CPU0:router(config)#commit` | Saves configuration changes.<br>• When you issue the **end** command, the system prompts you to commit changes:<br>`Uncommitted changes found, commit them before exiting(yes/no/cancel)?`<br>`[cancel]:` |

| | Command or Action | Purpose |
|---|---|---|
| | | - Entering **yes** saves configuration changes to the running configuration file, exits the configuration session, and returns the router to EXEC mode.<br>- Entering **no** exits the configuration session and returns the router to EXEC mode without committing the configuration changes.<br>- Entering **cancel** leaves the router in the current configuration session without exiting or committing the configuration changes.<br>• Use the **commit** command to save the configuration changes to the running configuration file and remain within the configuration session. |

# Installing and Activating a Virtual Service

This section describes how to install and activate a virtual service on the Cisco ASR 9000 VSM Card.

### Before you begin

- You have enabled the service enablement feature, using the **virtual-service enable** command.
- You have downloaded the image and copied it into the file-system of the IOS-XR platform or made it available on a tftp server accessible to the IOS-XR platform. For more information, see the *Cisco ASR 9000 Series Aggregation Services Router System Management Configuration Guide*.
- You have checked to ensure that the FPD version on the Cisco ASR 9000 VSM Card is compatible with the Cisco IOS XR version that is running on the router. For more information, see the *Cisco ASR 9000 Series Aggregation Services Router System Management Configuration Guide*.

## SUMMARY STEPS

1. **virtual-service install name** *unique-service-name* **package** *OVA package path* **node** *R/S/I for VSM Service Card>*
2. **show virtual-service list**
3. **configure**
4. **virtual-service** *name*
5. **profile** *profile name*
6. **vnic interface**
7. **end** or **commit**
8. **activate**
9. **end** or **commit**
10. **show virtual-service list**
11. **show virtual-service detail** name

## DETAILED STEPS

| | Command or Action | Purpose |
|---|---|---|
| **Step 1** | **virtual-service install name** *unique-service-name* **package** *OVA package path* **node** *R/S/I for VSM Service Card>*<br>**Example:**<br>`RP/0/RSP0/CPU0:router#virtual-service install name cgn1 package harddisk:cgnsmall.ova node 0/1/cpu0` | Installs the OVA package on the specified location:<br>**`virtual-service install name`** *`unique-service-name`* **`package`** *`OVA package path`* **`node`** *`R/S/I for VSM Service Card`*<br>• User specifies the R/S/I of the target node.<br>• The OVA package path points to either local storage or tftp path.<br>• If the path is local storage, store the OVA under harddisk or disk0. For example, harddisk:cgnsmall.ova.<br>• If the local storage is other than harddisk: or disk0:, prepend / to the OVA path. For example, /disk0a:/usr/cgnsmall.ova. |
| **Step 2** | **show virtual-service list**<br>**Example:**<br>`RP/0/RSP0/CPU0:router#show virtual-service list` | Displays a summary of virtual services and their status.<br>When the virtual service is installing, the status of the virtual service is *installing*<br>When the virtual service installation has been successfully complete, the status of the virtual service is *installed.*<br>`Virtual Service List:`<br>`Name Status Package Name Node Name`<br>`cgn1 Installing cgnsmall.ova 0/1/CPU0`<br>`Virtual Service List:`<br>`Name Status Package Name Node Name`<br>`cgn1 Installed cgnsmall.ova 0/1/CPU0` |
| **Step 3** | **configure**<br>**Example:**<br>`RP/0/RSP0/CPU0:router#configure` | Enters global configuration mode. |
| **Step 4** | **virtual-service** *name*<br>**Example:**<br>`RP/0/RSP0/CPU0:router(config) #virtual-service cgn1` | Enters configuration sub-mode for the named virtual service. |
| **Step 5** | **profile** *profile name* | (Optional) Configures the profile with the memory and CPU information required for this virtual service. |

| | Command or Action | Purpose |
|---|---|---|
| | | In Cisco IOS XR Release 5.1.1, only one profile is supported (Diamond).<br>If the user does not specify any profile and the profile information is not provided with the OVA package, the service provisioning manager will use the default profile. |
| **Step 6** | **vnic interface**<br>**Example:**<br>`RP/0/RSP0/CPU0: router(config-virt-service)#vnic interface tenGigE 0/1/1/0` | Specifies the new vnic interfaces to be assigned, followed by the type (tengige) and rack/slot/instance/port (line card rack, slot number, subslot number, port number). |
| **Step 7** | **end** or **commit**<br>**Example:**<br>`RP/0/RSP0/CPU0:router(config-virt-service)#end`<br>or<br>`RP/0/RSP0/CPU0:router(config-virt-service)#commit` | Saves configuration changes.<br>• When you issue the **end** command, the system prompts you to commit changes:<br>`Uncommitted changes found, commit them before exiting(yes/no/cancel)? [cancel]:`<br>- Entering **yes** saves configuration changes to the running configuration file, exits the configuration session, and returns the router to EXEC mode.<br>- Entering **no** exits the configuration session and returns the router to EXEC mode without committing the configuration changes.<br>- Entering **cancel** leaves the router in the current configuration session without exiting or committing the configuration changes.<br>• Use the **commit** command to save the configuration changes to the running configuration file and remain within the configuration session. |
| **Step 8** | **activate**<br>**Example:**<br>`RP/0/RSP0/CPU0:router(config-virt-service)#activate` | Activates the virtual service. |
| **Step 9** | **end** or **commit**<br>**Example:**<br>`RP/0/RSP0/CPU0:router(config)#end`<br>or<br>`RP/0/RSP0/CPU0:router(config)#commit` | Saves configuration changes.<br>• When you issue the **end** command, the system prompts you to commit changes:<br>`Uncommitted changes found, commit them before exiting(yes/no/cancel)? [cancel]:` |

| | Command or Action | Purpose |
|---|---|---|
| | | - Entering **yes** saves configuration changes to the running configuration file, exits the configuration session, and returns the router to EXEC mode.<br>- Entering **no** exits the configuration session and returns the router to EXEC mode without committing the configuration changes.<br>- Entering **cancel** leaves the router in the current configuration session without exiting or committing the configuration changes.<br>• Use the **commit** command to save the configuration changes to the running configuration file and remain within the configuration session. |
| **Step 10** | **show virtual-service list**<br>**Example:**<br>`RP/0/RSP0/CPU0:router#show virtual-service list` | Displays a summary of virtual services and their status.<br>When the virtual-service activation has been successfully complete, the status of the virtual service is *activated.*<br>`Name  Status  Package Name  Node Name`<br>`cgn1  Activated  cgnsmall.ova  0/1/CPU0` |
| **Step 11** | **show virtual-service detail** name | Shows the configuration of the named virtual service for verification. |

# Deactivating a Virtual Service

Complete the following instructions to deactivate a virtual service.

### SUMMARY STEPS

1. **configure**
2. **virtual-service** *name*
3. **no activate**
4. **end** or **commit**
5. **show virtual-service list**

### DETAILED STEPS

| | Command or Action | Purpose |
|---|---|---|
| **Step 1** | **configure**<br>**Example:**<br>`RP/0/RSP0/CPU0:router#configure` | Enters global configuration mode. |

| | Command or Action | Purpose |
|---|---|---|
| **Step 2** | **virtual-service** *name*<br>**Example:**<br>`RP/0/RSP0/CPU0:router(config) #virtual-service cgn1` | Enters configuration sub-mode for the named virtual service. |
| **Step 3** | **no activate**<br>**Example:**<br>`RP/0/RSP0/CPU0:router(conf-virt-service)#no activate` | Deactivates the virtual service.<br>This command deactivates the virtual service on the Cisco ASR 9000 VSM Card where the virtual service was running. Any allocated feature licenses are released. |
| **Step 4** | **end** or **commit**<br>**Example:**<br>`RP/0/RSP0/CPU0:router(config)#end`<br>or<br>`RP/0/RSP0/CPU0:router(config)#commit` | Saves configuration changes.<br>• When you issue the **end** command, the system prompts you to commit changes:<br>`Uncommitted changes found, commit them before exiting(yes/no/cancel)? [cancel]:`<br>- Entering **yes** saves configuration changes to the running configuration file, exits the configuration session, and returns the router to EXEC mode.<br>- Entering **no** exits the configuration session and returns the router to EXEC mode without committing the configuration changes.<br>- Entering **cancel** leaves the router in the current configuration session without exiting or committing the configuration changes.<br>• Use the **commit** command to save the configuration changes to the running configuration file and remain within the configuration session. |
| **Step 5** | **show virtual-service list**<br>**Example:**<br>`RP/0/RSP0/CPU0:router#show virtual-service list` | Displays a summary of virtual services and their status.<br>When the virtual-service deactivation has been successfully complete, the status of the virtual service is *deactivated.* |

# Remove Virtual Service Configuration

This task describes how to remove the virtual service configuration.

### Before you begin

You must deactivate the virtual service before you can remove the virtual service configuration. See the Deactivating a Virtual Service section.

### SUMMARY STEPS

1. **configure**
2. **no virtual-service** *name*
3. **end** or **commit**

### DETAILED STEPS

| | Command or Action | Purpose |
|---|---|---|
| **Step 1** | **configure**<br>**Example:**<br>`RP/0/RSP0/CPU0:router#configure` | Enters global configuration mode. |
| **Step 2** | **no virtual-service** *name*<br>**Example:**<br>`RP/0/RSP0/CPU0:router(config)#`<br>`no virtual-service cgn1` | Removes all the configurations related to the given virtual service. |
| **Step 3** | **end** or **commit**<br>**Example:**<br>`RP/0/RSP0/CPU0:router(config)#end`<br>or<br>`RP/0/RSP0/CPU0:router(config)#commit` | Saves configuration changes.<br>• When you issue the **end** command, the system prompts you to commit changes:<br>`Uncommitted changes found, commit them before exiting(yes/no/cancel)? [cancel]:`<br>- Entering **yes** saves configuration changes to the running configuration file, exits the configuration session, and returns the router to EXEC mode.<br>- Entering **no** exits the configuration session and returns the router to EXEC mode without committing the configuration changes.<br>- Entering **cancel** leaves the router in the current configuration session without exiting or committing the configuration changes.<br>• Use the **commit** command to save the configuration changes to the running configuration file and remain within the configuration session. |

# Uninstalling a Virtual Service

This task describes how to uninstall a virtual service.

### Before you begin

You must deactivate the virtual service and remove the configuration related to the virtual service before you can uninstall the virtual service. See the Deactivating a Virtual Service section and Remove Virtual Service Configuration section.

### SUMMARY STEPS

1. **virtual-service uninstall name***unique-service-name* **node** *R/S/I for VSM Service Card*
2. **show virtual-service list**

### DETAILED STEPS

| | Command or Action | Purpose |
|---|---|---|
| **Step 1** | **virtual-service uninstall name***unique-service-name* **node** *R/S/I for VSM Service Card*<br>**Example:**<br>`RP/0/RSP0/CPU0:router #uninstall cgn1 0/1/CPU0` | Uninstalls the virtual service.<br>**`virtual-service uninstall name`** *`unique-service-name`* **`node`** *`R/S/I for VSM Service Card`*<br>This command completely removes the virtual service from the Cisco ASR 9000 VSM Card where the virtual service was running. |
| **Step 2** | **show virtual-service list**<br>**Example:**<br>`RP/0/RSP0/CPU0:router #show virtual-service list` | Displays a summary of virtual services and their status.<br>The virtual service that you uninstalled does not appear on the list. |

# Displaying Information about a Virtual Service

To display information about a virtual service, use the following commands in EXEC mode:

| | |
|---|---|
| **show virtual-service** | Displays virtual service global state and virtualization limits. |
| **show virtual-service detail** *name* | Displays the configuration for the specified virtual service. |
| **show virtual-service global** | Displays virtual service global state and virtualization limits. |
| **show virtual-service profile** *name* | Displays the profile information for the specified virtual service. |

| | |
|---|---|
| **show virtual-service list** | Displays a list of all virtual service configurations.<br>The possible states are:<br>• Initializing<br>• Installing<br>• Installed<br>• Install Failed<br>• Activating<br>• Activated<br>• Activate Failed<br>• Deactivating<br>• Deactivated<br>• Error |

These commands will consider all of the virtual services that are installed, configured, or activated.

# Configuration Examples for a Virtual Service

This example shows how to enable the service enablement feature.

```
RP/0/RSP0/CPU0:router#configure
RP/0/RSP0/CPU0:router(config)#virtual-service enable
RP/0/RSP0/CPU0:router(config)#commit
```

This example shows how to install the service package.

```
RP/0/RSP0/CPU0:router#virtual-service install name cgn1 package/disk0a:/usr/cgnsmall.ova
node 0/1/CPU0
```

This example shows how to configure and activate the virtual service.

```
RP/0/RSP0/CPU0:router#configure
Fri Aug 2 18:10:25.525 UTC
RP/0/RSP0/CPU0:router(config)#virtual-service cgn1
RP/0/RSP0/CPU0:router(config-virt-service)#vnic interface tenGigE 0/1/1/0
RP/0/RSP0/CPU0:router(config-virt-service)#vnic interface tenGigE 0/1/1/1
RP/0/RSP0/CPU0:router(config-virt-service)#vnic interface tenGigE 0/1/1/2
RP/0/RSP0/CPU0:router(config-virt-service)#vnic interface tenGigE 0/1/1/3
RP/0/RSP0/CPU0:router(config-virt-service)#vnic interface tenGigE 0/1/1/4
RP/0/RSP0/CPU0:router(config-virt-service)#vnic interface tenGigE 0/1/1/5
RP/0/RSP0/CPU0:router(config-virt-service)#vnic interface tenGigE 0/1/1/6
RP/0/RSP0/CPU0:router(config-virt-service)#vnic interface tenGigE 0/1/1/7
RP/0/RSP0/CPU0:router(config-virt-service)#vnic interface tenGigE 0/1/1/8
RP/0/RSP0/CPU0:router(config-virt-service)#vnic interface tenGigE 0/1/1/9
RP/0/RSP0/CPU0:router(config-virt-service)#vnic interface tenGigE 0/1/1/10
RP/0/RSP0/CPU0:router(config-virt-service)#vnic interface tenGigE 0/1/1/11
```

```
RP/0/RSP0/CPU0:router(config-virt-service)#commit
Fri Aug 2 18:11:34.285 UTC
RP/0/RSP0/CPU0:router(config-virt-service)#activate
RP/0/RSP0/CPU0:router(config-virt-service)#commit
```

This example shows how to check the status of the virtual service.

```
RP/0/RSP0/CPU0:router#show virtual-service list
Fri Aug 2 18:01:38.310 UTC
Virtual Service List:

Name       Status      Package Name     Node Name
_____________________________________________
cgn1       Installing  cgnsmall.ova      0/1/CPU0

RP/0/RSP0/CPU0:router#show virtual-service list
Fri Aug 2 18:10:17.291 UTC
Virtual Service List:

Name       Status      Package Name     Node Name
_____________________________________________
cgn1       Installed   cgnsmall.ova      0/1/CPU0


RP/0/RSP0/CPU0:router#show virtual-service list
Fri Aug 2 19:11:34.525 UTC
Virtual Service List:

Name       Status      Package Name     Node Name
_____________________________________________
cgn1       Activated   cgnsmall.ova      0/1/CPU0
```

This example shows how to deactivate a virtual service.

```
RP/0/RSP0/CPU0:router#conf t
RP/0/RP0/CPU0:router(config)#virtual-service cgn1
RP/0/RP0/CPU0:router(config-virt-service)#no activate
RP/0/RP0/CPU0:router(config-virt-service)#commit
```

This example shows how to remove the virtual service configuration.

```
RP/0/RSP0/CPU0:router#configure
RP/0/RSP0/CPU0:router(config)#no virtual-service cgn1
RP/0/RSP0/CPU0:router(config)#commit
```

This example shows how to uninstall a virtual service.

```
RP/0/RP0/CPU0:router #virtual-service uninstall name cgn1 node 0/1/CPU0
RP/0/RP0/CPU0:router #commit
```

CHAPTER 22

# Configuring the 4xT 12in1 4-Port Serial SPA

This chapter provides information about configuring the 4xT 12in1 4-Port Serial Interface Shared Port Adapter (SPA) on the Cisco ASR9000 series router.


- Configuration Tasks, on page 735


## Configuration Tasks

This section describes how to configure the 4xT 12in1 Serial Interface SPA for the Cisco ASR9000 series router and includes information about verifying the configuration.


- Configuring the 4xT 12-in-1 Serial Interface SPA, on page 735
- Specifying the Interface Address on a SPA, on page 736
- Optional Configurations, on page 736
- Verifying the Configuration, on page 742


### Configuring the 4xT 12-in-1 Serial Interface SPA

To perform the basic configuration of the 4xT 12in1 serial interface SPA, complete the following steps:

```
Router# configure terminal
/* Select the 4xT 12-in-1 serial interface to configure and enter interface
   configuration mode. rack/slot/subslot/port—Specifies the location of the 4xT 12in1 Serial

   interface SPA  port. */
Router(config)# interface serial rack/slot/subslot/port

/* Select the L2 encapsulation (hdlc, ppp, or frame-relay). Defaults to hdlc if not
configured. */
Router(config-if)# encapsulation l2-encapsulation
Router(config-if)# ipv4 address address mask
Router(config-if)# bandwidth kbps
Router(config-if)# serial
Router(config-if-serial)# clock rate bps
```

**Note**

- Before attempting the full configuration, connect each port to the appropriate cable. Some commands are enabled only based on the cable type that is connected to the port.

  Configure the following commands for all the 4xT 12-in-1 serial interfaces:

  - Interface bandwidth kbps - Specifies the interface data rate that is used for the packet scheduling. The value for bandwidth must be the same as specified for DCE clock rate. Specify the bandwidth in kbps (bps/1000) and clock rate in bps. If not specified, the bandwidth defaults to 8 Mbps.
  - Serial clock rate bps - Specifies the DCE clock rate (DCE only). For a DTE, DCE sets the clock rate. For a DCE, if not specified, the value defaults to 2 Mbps.

## Verifying the configuration

```
RP/0/RSP0/CPU0:ASR9K-AG03-1#show running-config interface Serial0/2/1/1
Wed Mar 14 20:23:26.200 edt
interface Serial0/2/1/1
description X.21 DCE SPA-4xT connection to ASR1002-AG03-1 Serial0/1/1 X.21 DTE
bandwidth 2016
ipv4 address 40.1.0.2 255.255.255.0
encapsulation hdlc
bandwidth 2000
serial
  clock rate 2000000
!
!
```

# Specifying the Interface Address on a SPA

To configure or monitor SPA interfaces, you must specify the physical location of the SIP, SPA, and the interface in CLI (Command Line Interface). The interface address format is *rack/slot/subslot/port*, where:

- *rack* - Is always 0 for the Cisco ASR9000 series router.
- *slot* - Specifies the chassis slot number in the Cisco ASR9000 series router where the SIP is installed.
- *subslot* - Specifies the secondary slot of the SIP where the SPA is installed. Range 0-3.
- *port* - Specifies the number of the individual interface port on an SPA. SPA interface ports numbering begins “0”, from left to right.

The following example shows how to specify the first interface (0) on an SPA. The SPA is installed on the second subslot of a SIP (1) installed on the chassis slot 2:

```
RP/0/RSP0/CPU0:ASR9K-AG03-1(config)#int Serial0/2/1/0
```

# Optional Configurations

The following optional configurations are necessary to complete the configuration of your serial SPA:

- Configuring Timing Signals and Data Rate Options, on page 737

- Configuring Framing and Encoding Options, on page 740
- Configuring Interface Signal Control Options, on page 740
- Frame-Relay Configuration Guidelines, on page 742

Following are the two levels of interface configuration for serial interfaces:

- *interface* level
- *serial* submode under the interface

You can configure the basic interface features, such as an IP address, encapsulation, keepalive, service-policy, bandwidth, and so on, at the interface level. While at the interface serial submode level, you can configure the serial specific features.

You can enter a serial command directly from the interface mode by prefixing the command with the serial keyword, or by entering serial submode and then entering the serial commands. For example,

```
Router(config-if)# serial clock rate 20000000
 or
 Router(config-if)# serial
Router(config-if-serial)# clock rate bps
```

Under the interface serial submode, the following options are available for the 4xT 12in1 SPA interfaces:

| | |
|---|---|
| clock rate <246-8064000> | DCE only |
| clock rate threshold <246-8064000> | DTE only |
| dce-terminal-timing-enable | DCE only |
| idle-char [flags \| marks] | DCE or DTE |
| ignore [dcd \| dcd dsr] | DTE only |
| invert-txclock | DCE or DTE |
| loopback | DCE or DTE |
| nrzi-encoding | DCE or DTE |
| carrier-delay [<0-60> \| msec <0-1000>] | DCE or DTE |
| pulse-time [<0-60> \| msec <0-60000>] | DCE or DTE |
| restart-delay <0-900> | DCE or DTE |

**Note** Some of the commands are only applicable to or might have differing behaviour that are based on the interface mode (DCE vs. DTE) or cable type such as, X.21, V.35, RS-232, RS-449, RS-530, RS-530.

Unlike other Serial SPAs, there is no controller-level configuration for the 4xT 12-in-1 serial interface.

## Configuring Timing Signals and Data Rate Options

All interfaces support both DTE and DCE mode, depending upon the mode of the Smart Serial cable attached to the port. To use a port as a DTE interface, connect a DTE Smart Serial cable to the port. When the system detects the DTE mode cable, it automatically uses the external timing signal. To use a port in DCE mode,

connect a DCE Smart Serial cable and set the clock rate with the clock rate configuration command. Also, set the clock rate to perform a loopback test.

In addition to setting the clock rate for the external interface, you must also configure the bandwidth of the interface. Configuring the bandwidth defines the rate that is used for the packet transmit scheduling on the interface. This configuration requirement is specific to the 4xT 12-in-1 serial interface type. The value for bandwidth must be same as specified for the DCE clock rate. For a DTE type interface, if the external clock rate is not known, you can determine the clock rate after the interface is operational by looking at the Receive Clock Rate value. Use the show controller Serial command to determine the clock rate. The value for bandwidth must be same as specified for DCE clock rate. Specify the bandwidth in Kbps (bps/1000). If not specified, the bandwidth defaults to 8 Mbps.

Example: Determining the DTE clock rate by using the show controller command:

```
RP/0/RSP0/CPU0:ASR9K-AG03-1#show controller Serial0/2/1/1 | inc Receive Clock Rate
Fri Mar 16 10:18:29.948 edt
 Receive Clock Rate:    2015970 bps (Hardware)
```

Since bandwidth is defined in kbps, when you define the bandwidth, round the above bps rate to the next multiple of 1000 (example: 2016 kbps).

Use the following commands when configuring these options:

```
/* Enter the global configuration mode */
Router# configure terminal

/* Select the 4xT 12in1 Serial interface to configure and enters interface
   configuration mode.

   rack/slot/subslot/port—Specifies the location of the 4xT 12in1 Serial
   interface SPA  port.
*/

Router(config)# interface serial rack/slot/subslot/port

/* Configure the interface data rate (bandwidth) to be used for packet scheduling
   (in kbps)
*/

Router(config-if)# bandwidth kbps
/* Enter serial interface configuration sub-mode */
Router(config-if)# serial
/* For a DCE interfafce - configure the serial interface clock rate for the hardware.
   The DCE clock rate is specified in bits per second (bps).  Configurable ranges are
   from 1200 to 8064000. Note however that there are cable type specific limitations for
   RS-232 (max 128,000 bps) and X.21 (max 2,016,000 bps).  All others have 8064000 as the
   max bps.

   The default rate if not specified is 2M bps.  The no form of this command removes a
   clock rate that has been set (restores the default rate for DCE).

   When configuring the DCE clock rate, since the configuration is not cable type aware
   (cable might not even be plugged in at config time), invalid clock rates for a cable
   type will not be flagged during configuration.  Validation will be done when the
   config is being applied to the hardware.  If the clock rate is greater than what can
   be supported by the cable type an Alert notification will be posted to SysLog
   console and the clock rate will be defaulted to the max rate supported by the cable
   type.  You may also see a “bestfit” Alert posted as well.
*/

Router(config-if-serial)# clock rate bps
/* For a DTE interface (optional) - The DTE clock rate threshold specifies the minimum
   Rx clock rate that will be accepted for the interface.  If the Rx clock rate is less
```

```
   than the configured threshold, the interface state will be down and a Rx Clock alarm
   will be posted.  The alarm will clear after the Rx Clock rate increases at or above
   the threshold.

   Default value is 0 which implies disabled.  Default config is not displayed.

   The no form of this command or setting the bps rate to 0 removes the clock rate
   threshold that has been set.

   Note: Keep in mind that due to hardware, cables, and thermal variations the Rx Clock
   Rate may be slightly less than the configured Tx clock rate on the peer DCE
   device.  That being the case, the Rx clock rate threshold should be configured
   slightly less than the peer DCE Tx clock rate.
*/

Router(config-if-serial)# clock rate threshold bps
/* Invert the transmit clock signal. When the RS-232 interface is a DTE, the invert
   Tx Clock command inverts the TxC signal the DTE receives from the remote DCE. When
   the RS-232 interface is a DCE, the invert txclock command inverts the clock signal to
   the remote DTE port.

   The no form of this command changes the clock signal back to its original state.

   Systems that use long cables or cables that are not transmitting the TxC (clock)
   signal might experience high error rates when operating at higher transmission
   speeds.  If a Serial port is reporting a high number of error packets, a phase shift
   might be the problem; inverting the clock might correct this phase shift.
*/

Router(config-if-serial)# invert txclock
/* Invert the data signal.

   The no form of this command disables the inversion of the data signal.
*/

Router(config-if-serial)# invert data

/* When the interface is operating as a DCE and the DTE provides terminal timing (SCTE or
   TT), you can configure the DCE to use SCTE from the DTE. When running the line at high
   speeds and long distances, this strategy prevents phase shifting of the data with
   respect to the clock.  If Serial Clock Transmit External (SCTE) terminal timing is not
   available from the DTE, use the no form of this command; the DCE will use its own
   clock instead of SCTE from the DTE.
*/

Router(config-if-serial)# dce-terminal-timing-enable
```

To verify the applied clock rate (DCE) or detected clock rate (DTE), use the show controller command. Valid clock rates are any configurable value between the cable type min and max however the standard rates below are supported base rates that will avoid “bestfit” rounding for the hardware.

**Note**

- Standard Clock rates supported for RS-232: 1.2K, 2.4K, 4.8K, 9.6K, 14.4K, 19.2K, 28.8K, 32K, 38.4K, 56K, 64K, and 128K.
- Standard Clock rates supported for RS-530, RS-530A, RS-449, V.35: 1.2K, 2.4K, 4.8K, 9.6K, 14.4K, 19.2K, 28.8K, 32K, 38.4K, 56K, 64K, 72K, 115.2K, 2.048M, 2.341M, 2.731M, 3.277M, 4.09M, 5.461M, and 8.064M.
- Standard Clock rates supported for X.21: 1.2K, 2.4K, 4.8K, 9.6K, 14.4K, 19.2K, 28.8K, 32K, 38.4K, 56K, 64K, 72K, 115.2K, and 2.016M.

-

## Configuring Framing and Encoding Options

For the serial interface there are several options available to control framing and encoding. Use the following commands when configuring these options:

```
/* Enter the global configuration mode */
Router# configure terminal

/* Select the 4xT 12in1 Serial interface to configure and enters interface configuration
mode. rack/slot/subslot/port—Specifies the location of the 4xT 12in1 Serial interface SPA
 port.*/
Router(config)# interface serial rack/slot/subslot/port


/* Enter serial interface configuration sub-mode */
Router(config-if)# serial

/* Define the CRC type attached to the L2 frame (16-bit or 32-bit).  The default is CRC
16.*/
Router(config-if-serial)# crc <16 | 32>

/* NRZ and NRZI are line-coding formats that are required for serial connections in some
environments. The default configuration for all serial interfaces is NRZ format (no
nrzi-encoding).
*/
Router(config-if-serial)# nrzi-encoding

/* The flags option sends hdlc flag (0x7E) characters between frames.  The marks option
sends mark characters (0xFF) between frames. The default is flags.*/
Router(config-if-serial)# idle-character <flags | mark>

/* The configurable value specifies the number of HDLC flag sequences (idle characters)
that you can insert between the frames. The maximum number of flags for the 4xT 12in1
interface is 15. Default is 0 (disabled).*/

Router(config-if-serial)# transmit-delay <0-15>
```

## Configuring Interface Signal Control Options

For the 4xT 12-in-1 serial interface, there are several options available to control handling of the various interface signals to and from the modem/CSU/DSU. Use the following commands when configuring these options:

```
/* Enter the global configuration mode */
```

```
Router# configure terminal

/* Select the 4xT 12in1 Serial interface to configure and enters interface configuration
mode.
  rack/slot/subslot/port—Specifies the location of the 4xT 12in1 Serial interface SPA
port.*/
Router(config)# interface serial rack/slot/subslot/port


/* Enter serial interface configuration sub-mode */
Router(config-if)# serial

/* The restart delay value specified in seconds. The restart-delay defaults to 60 seconds
if not configured.
The restart-delay specifies the amount of time that the router waits before trying to bring
 up a serial interface when it goes down.

When the interface connection with the peer device is down, the router resets the hardware
 each time the serial restart timer expires.  This command is often used with the dial
backup feature and with the pulse-time command, which sets the amount of time  to wait
before redialing when a DTR dialed device fails to connect.

When the restart-delay is set to 0, the hardware is not reset when it goes down. In this
way, if the interface is used to answer a call, it does not cause DTR to drop, which can
cause a communications device to disconnect. */

Router(config-if-serial)# restart-delay <0-900>

/* To enable pulsing data terminal ready (DTR) signal intervals on the serial interfaces,
use the pulse-time command in interface configuration mode. Default value is 0 second
(disabled).

When the serial line protocol goes down (for example, because of loss of synchronization),
 the interface hardware is reset and the DTR signal is held inactive
for at least the specified pulse-time interval. This function is useful for handling
encrypting or other similar devices that use the toggling of the DTR signal to resynchronize.


   If restart-delay is manually configured to 0 (disabled) and pulse-time is enabled,
   restart-delay will be set to 60 seconds behind the scenes as restart-delay is needed
   when using pulse-time.  This override will not appear in the running config.
*/

Router(config-if-serial)# pulse-time <<0-60 sec> | msec 0-60000>>

/* Time to wait for the router to be notified of interface state changes (i.e. debounce).

   If a link goes down and comes back up before the carrier delay timer expires, the down
   state is effectively filtered, and the rest of the software on the router is not aware
   that a link-down event occurred. Therefore, a large carrier delay timer results in
   fewer link-up/link-down events being detected. Setting the carrier delay time to 0
   (default) means that every link-up/link-down event is detected.

   Triggers for carrier-delay include a LOS (Loss of Signal) or Rx Clock Threshold alarm.
*/

Router(config-if-serial)# carrier-delay <<0-60 sec> | msec 0-1000>>

/* The ignore dcd option ignores data carrier detect signal (dcd) on the DTE
   interface.  The ignore dcd dsr option ignores both dcd and data set ready signal (dsr)
   on DTE interface.*/

Router(config-if-serial)# ignore <dcd | dcd dsr>
```

**Note** The acronyms are defined as follows: RTS (Request to Send); CTS (Clear To Send); DTR (Data Transmit Ready); DCD (Data Carrier Detect); DSR (Data Set Ready).

## Frame-Relay Configuration Guidelines

For FRF.12, note the following:

- The fragmentation is configured at the main interface.
- Any fragmentation size is available.
- FRF.12 is not supported with 4xT 12-in-1 Serial Interface SPA on Cisco ASR9000 SIP.

For information on configuring FRF.12 on the Cisco SIP, see: https://www.cisco.com/c/en/us/td/docs/routers/asr9000/software/asr9k_r5-1/interfaces/configuration/guide/hc51xasr9kbook/hc51fram.html.

For LFI that uses FRF.12, note the following:

- The fragmentation is configured at the main interface.
- Any fragmentation size is available.

**Note** FRF.12 LFI is not supported with 4xT 12in1 Serial Interface SPA on Cisco ASR9000 SIP-400.

# Verifying the Configuration

After configuring the new interface, use the show commands to display the status of the new interface or all interfaces, and use the ping and loopback commands to check connectivity.

### Show Commands

The table below explains the show commands you can use to verify the operation of the 4xT 12in1 Serial Interface SPA. Sample displays of the output of selected show commands appear in the section that follows.

**Note** The outputs that appear in this document may not match the output you receive when you run these commands. The outputs in this document are only examples.

| Command | Purpose |
|---|---|
| `Router# show version`<br>`or`<br>`Router# show hardware` | Displays system hardware configuration, the number of each interface type installed, Cisco IOS software version, names and sources of configuration files, and boot images. |
| `Router# show controllers serial`<br>`Router# show controllers serial-T` | Displays serial line statistics. |

| Command | Purpose |
|---|---|
| `Router# show diag [detail \| summary ]` | Displays all the hardware in the box, such as serial number. |
| `Router# show interfaces type rack/slot/subslot/port` | Displays status information about a specific type of interface (for example, serial) in a Cisco ASR9000 series router. |
| `Router# show protocols` | Displays protocols configured for the entire system and for specific interfaces. |
| `Router# show running-config` | Displays the running configuration file. |
| `Router# show inventory` | Displays the available hardware in the box, such as serial numbers of the cards. |

## Verification Examples

### Show version example

The following is an example of a show version command with the 4xT 12-in-1 Serial Interface SPA. The show hardware command may also be used to obtain the same information:

```
RP/0/RSP0/CPU0:ASR9K-AG03-1#show version
Wed Mar 14 13:55:10.228 edt

Cisco IOS XR Software, Version 6.4.1.30I[Default]
Copyright (c) 2018 by Cisco Systems, Inc.

ROM: System Bootstrap, Version 0.76(c) 1994-2012 by Cisco Systems,  Inc.

ASR9K-AG03-1 uptime is 5 weeks, 6 days, 23 hours, 6 minutes
System image file is "disk0:asr9k-os-mbi-6.4.1.30I/0x100305/mbiasr9k-rsp3.vm"

cisco ASR9K Series (Intel 686 F6M14S4) processor with 6291456K bytes of memory.
Intel 686 F6M14S4 processor at 2126MHz, Revision 2.174
ASR 9006 4 Line Card Slot Chassis with V1 AC PEM

2 Management Ethernet
1 FastEthernet
20 GigabitEthernet
4 TenGigE
4 DWDM controller(s)
4 WANPHY controller(s)
4 Serial-T 12in1 controller
4 Serial network interface(s)
2 T3
2 Serial network interface(s)
503k bytes of non-volatile configuration memory.
6143M bytes of hard disk.
11817968k bytes of disk0: (Sector size 512 bytes).
11817968k bytes of disk1: (Sector size 512 bytes).

Configuration register on node 0/RSP0/CPU0 is 0x102
Boot device on node 0/RSP0/CPU0 is disk0:
Package active on node 0/RSP0/CPU0:
asr9k-fpd, V 6.4.1.30I[Default], Cisco Systems, at disk0:asr9k-fpd-6.4.1.30I
    Built on Wed Jan 10 23:21:36 edt 2018
   By iox-lnx-076 in /auto/iox-lnx-076-san2/production/6.4.1.30I.SIT_IMAGE/asr9k-px/workspace
```

```
 for pie

asr9k-fpd-px, V 6.4.1.30I[Default], Cisco Systems, at disk0:asr9k-fpd-px-6.4.1.30I
    Built on Wed Jan 10 23:22:04 edt 2018
   By iox-lnx-076 in /auto/iox-lnx-076-san2/production/6.4.1.30I.SIT_IMAGE/asr9k-px/workspace
 for pie

iosxr-infra-6.4.1.30I.CSCvh71809, V 0.0.2.i[SMU], Cisco Systems, at
disk0:iosxr-infra-6.4.1.30I.CSCvh71809-0.0.2.i
    Built on Mon Jan 29 15:34:50 edt 2018
    By sjc-ads-8322 in /nobackup/SMU_BLD_WS/CSCvh71809.180129110940 for pie
```

**Note** Please be informed that this output is just an example and not a complete output.

### Show running-config serial example

The following is an example of the show running-config serial command with the 4xT 12-in-1 Serial Interface SPA:

```
RP/0/RSP0/CPU0:ASR9K-AG03-1#show running-config interface serial *
Fri Mar 16 13:36:39.699 edt
interface Serial0/2/1/0
 description V.35 DCE SPA-4xT connection to ASR1002-AG03-1 Serial0/1/0 V.35 DTE
 bandwidth 2000
 mtu 2000
 ipv4 address 40.0.0.2 255.255.255.0
 serial
  crc 32
  clock rate 2000000
  pulse-time 20
  transmit-delay 7
  nrzi-encoding
  restart-delay 30
  idle-character marks
  invert-txclock
 !
!
interface Serial0/2/1/1
 description X.21 DTE SPA-4xT connection to ASR1002-AG03-1 Serial0/1/1 X.21 DCE
 bandwidth 2016
 ipv4 address 40.1.0.2 255.255.255.0
 encapsulation hdlc
 serial
  clock rate threshold 2000000
 !
!
interface Serial0/2/1/2
 description RS-232 DCE SPA-4xT connection to ASR1002-AG03-1 Serial0/1/2 RS-232 DTE
 bandwidth 128
 ipv4 address 40.2.0.2 255.255.255.0
 encapsulation hdlc
 serial
  clock rate 128000
 !
!
interface Serial0/2/1/3
 description V.35 DTE SPA-4xT connection to ASR1002-AG03-1 Serial0/1/3 V.35 DCE
 bandwidth 8064
 ipv4 address 40.3.0.2 255.255.255.0
 encapsulation hdlc
```

```
 serial
  clock rate threshold 8000000
 !
!
```

**Note** You can also use the show interfaces serial and the show controllers serial commands to get detailed information on a per-port basis for your 4xT 12-in-1 Serial.

### Show controllers serial-T example

The following is an example of the show controllers serial-T command with the 4xT 12-in-1 Serial Interface SPA.

- This command displays a combination of the interface/controller configuration, alarm status, modem signal status, and packet Rx/Tx counters.
- The format and contents of the show controller output might differ based on the cable or interface type (i.e. DCE vs. DTE.)
- Use of the '*'  as in "show controller serial-t *" displays the data for ALL Serial-T controllers .
- You can clear the Rx and Tx counters by using the clear counters Serial-T <r/s/b/p> command. The short name Serial works with this command as well. Clearing these counters via "clear counters Serial-T…" does not affect show interface counts. They must be cleared via "clear counter".
- The system generates the following alarms for the 4xT 12in1 Serial interface:
  - LOS (Loss of Signal) implies that DSR, CTS, DCD are not being received from the DCE or DTR, RTS is not being seen from the DTE.
  - Rx Clock Threshold implies that the clock rate received from the DCE is less than the configured (minimum) Clock Rate Threshold.  This is a DTE only alarm.

  If either of these alarms are active, they can be seen via the Alarms: line in the show command output.
- The system displays the state of the individual modem signals via the RTS/CTS/DTR/DSR/DCD/LL line.
- The system displays several clock rate related entries.
  - DCE
    - Clock Rate (configured) – This is the user configured (or default) Tx Clock Rate. Default clock rate is 2016000 bps.
    - Bestfit Clock Rate (Calculated) – This is what software has determined as the bestfit clock rate for the hardware based on the user configured (or default) value. Note that if there is a mis-match between the configured clock rate and the max clock rate allowed by the cable type, bestfit will also indicate the rate adjusted due to cable type.
    - Transmit Clock Rate (Hardware) – This is the clock rate programmed into the hardware. This should match the Bestfit Clock Rate.
  - DTE

- Clock Rate Threshold (Configured) – This is the minimum Receive Clock Rate that must be received before the interface will be enabled. If ZERO, the threshold check is ignored.
- Receive Clock Rate (Hardware) – This is the Rx clock rate as seen by the DTE. This is also the Tx clock rate to the DCE (i.e. DCE provides the clock source).

- DTE and DCE
  - Transmit Data Rate (Queuing Effective Bandwidth) – This is the interface bandwidth as indicated by the "interface bandwidth" user configuration. Default is 8,064,000 bps if not configured by the user. Ideally this should match the DCE Bestfit Clock Rate or the DTE Receive Clock Rate.

```
DCE Example:

RP/0/RSP0/CPU0:ASR9K-AG03-1# show controller Serial0/2/1/2
Tue Sep 19 15:06:06.736 edt

Serial-T 0/2/1/2 is up
 Alarms: No alarms detected
 Port Name: Serial-T 0/2/1/2
 Cable Type:            RS-232 DCE
 Encapsulation:         HDLC (14)
 Loopback:              disabled
 MTU:                   1504
 CRC Mode:              CRC16
 NRZI Mode:             NRZ
 Idle Character:        flags
 Invert Data:           disabled
 Invert Transmit Clock: disabled
 Tx Delay:              0 (flags)
 Restart Delay:         60000 msec
 Pulse Time:            0 msec
 Carrier Delay:         0 msec
 DCE Terminal Timing:   disabled
 Clock Rate:            128000 bps (Configured)
 Bestfit Clock Rate:    128000 bps (Calculated)
 Transmit Clock Rate:   128000 bps (Hardware)
 Transmit Data Rate:    128000 bps (Queuing Effective Bandwidth)
 RTS Up, CTS Up, DTR Up, DSR Up, DCD Up, LL Down
 Rx CRC Errors:    0, Rx MTU Errors:    0, Rx Runts:    0, Rx Drops:    0
 Rx Aborts:        0, Rx Packets:     186, Rx Bytes:     4464
 Tx Aborts:        0, Tx Packets:     185, Tx Bytes:     4062

DTE Example:

RP/0/RSP0/CPU0:ASR9K-AG03-1# show controller Serial0/2/1/3
Tue Sep 19 15:06:11.379 edt

Serial-T 0/2/1/3 is up
 Alarms: No alarms detected
 Port Name: Serial-T 0/2/1/3
 Cable Type:            V.35 DTE
 Encapsulation:         HDLC (14)
 Loopback:              disabled
 MTU:                   1504
 CRC Mode:              CRC16
 NRZI Mode:             NRZ
 Idle Character:        flags
 Invert Data:           disabled
 Invert Transmit Clock: disabled
```

```
 Tx Delay:              0 (flags)
 Restart Delay:         60000 msec
 Pulse Time:            0 msec
 Carrier Delay:         40000 msec
 Ignore Signals:        disabled
 Clock Rate Threshold:  8000000 bps (Configured)
 Receive Clock Rate:    8063815 bps (Hardware)
 Transmit Data Rate:    8064000 bps (Queuing Effective Bandwidth)
 RTS Up, CTS Up, DTR Up, DSR Up, DCD Up, LL Down
 Rx CRC Errors:    0, Rx MTU Errors:    0, Rx Runts:    0, Rx Drops:    0
 Rx Aborts:        0, Rx Packets:     189, Rx Bytes:     4500
 Tx Aborts:        0, Tx Packets:     189, Tx Bytes:     4138
```

**Note** The acronyms are defined as follows: RTS (Request to Send); CTS (Clear To Send); DTR (Data Transmit Ready); DCD (Data Carrier Detect); DSR (Data Set Ready).

The following is an example of the show interfaces serial command with the 4xT 12-in-1 Serial Interface SPA:

- If you configure the interface bandwidth, it will appear in the BW <rate> Kbit section of show interface.
- If you configure loopback on the Serial interface or at the peer device, the system indicates loopback status in the line protocol section of show interface provided keepalives are enabled. If keepalives are disabled, the protocol has no way of detecting the loopback condition.

```
RP/0/RSP0/CPU0:ASR9K-AG03-1#show interface Serial0/2/1/3
Tue Sep 19 14:36:12.452 edt
Serial0/2/1/3 is up, line protocol is up
  Interface state transitions: 2
  Hardware is Serial network interface(s)
  Description: V.35 DTE SPA-4xT connection to ASR1002-AG03-1 Serial0/1/3 V.35 DCE
  Internet address is 40.3.0.2/24
  MTU 1504 bytes, BW 8064 Kbit (Max: 8064 Kbit)
     reliability 255/255, txload 0/255, rxload 0/255
  Encapsulation HDLC, crc 16, keepalive set (10 sec)
  Last link flapped 00:00:52
  Scrambling is disabled,  Invert data is disabled
  Last input 00:00:03, output 00:00:03
  Last clearing of "show interface" counters never
  5 minute input rate 0 bits/sec, 0 packets/sec
  5 minute output rate 0 bits/sec, 0 packets/sec
     6 packets input, 144 bytes, 0 total input drops
     0 drops for unrecognized upper-level protocol
     Received 0 runts, 0 giants, 0 throttles, 0 parity
     0 input errors, 0 CRC, 0 frame, 0 overrun, 0 ignored, 0 abort
     7 packets output, 146 bytes, 0 total output drops
     0 output errors, 0 underruns, 0 applique, 0 resets
     0 output buffer failures, 0 output buffers swapped out
```

The following are examples of the show platform command with the 4xT 12in1 Serial Interface SPA:

```
RP/0/RSP0/CPU0:ASR9K-AG03-1#show platform
Tue Sep 19 14:47:22.312 edt
Node  Type    State     Config State
--------------------------------------------------------------------------------
0/RSP0/CPU0     A9K-RSP440-TR(Active)     IOS XR RUN       PWR,NSHUT,MON
0/0/CPU0        A9K-MOD80-TR              IOS XR RUN       PWR,NSHUT,MON
0/0/0           A9K-MPA-4X10GE            OK               PWR,NSHUT,MON
```

```
0/0/1           A9K-MPA-20X1GE            OK                PWR,NSHUT,MON
0/2/CPU0        A9K-SIP-700               IOS XR RUN        PWR,NSHUT,MON
0/2/1           SPA-4XT-SERIAL            OK                PWR,NSHUT,MON
0/2/3           SPA-2XT3/E3               OK                PWR,NSHUT,MON
```

### show diag [detail | summary] example

The following are examples of the show diag [detail | summary] command with the 4xT 12in1 Serial Interface SPA:

```
RP/0/RSP0/CPU0:ASR9K-AG03-1# show diag detail
<snip…>
SPA 0/2/1 : 4-port 12in1 Serial Shared Port Adapter

  MAIN:  board type 055a
         68-4305-02 rev D0
         dev N/A
         S/N SAL204705BA
  PCA:   73-13702-02 rev C0
  PID:   SPA-4XT-SERIAL
  VID:   V05
  CLEI:  IPUIA0BRAE
  Board State : OK
  FPD Software Revision:

RP/0/RSP0/CPU0:ASR9K-AG03-1# show diag summary
Tue Sep 19 14:49:09.052 edt

NODE module 0/RSP0/CPU0  ASR9K Route Switch Processor with 440G/slot Fabric and 6GB

NODE module 0/0/CPU0  80G Modular Linecard, Packet Transport Optimized

MPA 0/0/0 : ASR 9000 4-port 10GE Modular Port Adapter

NODE module 0/2/CPU0  Cisco ASR 9000 Series SPA Interface Processor-700

SPA 0/2/1 : 4-port 12in1 Serial Shared Port Adapter

SPA 0/2/3 : 2-port T3/E3 Serial Shared Port Adapter
```

### show inventory example

The following are examples of the show inventory command with the 4xT 12-in-1 Serial Interface SPA:

```
RP/0/RSP0/CPU0:ASR9K-AG03-1# show inventory location 0/2/1
Tue Sep 19 14:51:58.871 edt
NAME: "module 0/2/1", DESCR: "4-port 12in1 Serial Shared Port Adapter"
PID: SPA-4XT-SERIAL, VID: V05, SN: SAL204705BA
```

### Clear Commands

The following commands may be used to clear the various statistics counters displayed via the show commands:

- **clearing interface counters** - The interface counts displayed via show interface are cleared via the clear counters CLI. This command does not affect the Serial-T controller counters.
- clearing Serial-T controller counts - The Rx and Tx counters displayed via show controller Serial-t can be cleared using the following commands. This command does not affect the show interface counters.

  *clear counters Serial-t <rack/slot/bay/port>*

  *clear controller Serial-t <rack/slot/bay/port>*

## Using the Ping Command to Verify Network Connectivity

Using the ping command, you can verify that an interface port is functioning properly. This section provides a brief description of this command.

The ping command sends echo request packets out to a remote device at an IP address that you specify. After sending an echo request, the system waits a specified time for the remote device to reply. Each echo reply is displayed as an exclamation point (!) on the console terminal; each request that is not returned before the specified timeout is displayed as a period (.). A series of exclamation points (!!!!!) indicates a good connection; a series of periods (.....) or the messages [timed out] or [failed] indicate a bad connection or an over sub-scribed interface.

Following is an example of a successful ping command to a remote server with the address 10.0.0.10:

```
Router# ping 10.0.0.10
Type escape sequence to abort.
Sending 5, 100-byte ICMP Echoes to 10.0.0.10, timeout is 2 seconds:
!!!!!
Success rate is 100 percent (5/5), round-trip min/avg/max = 1/15/64 ms
Router#
```

If the connection fails, verify that you have the correct IP address for the destination and that the device is active (powered on), and repeat the ping command.

The loopback commands helps you to finish checking network connectivity.

### Using the Loopback Commands

With the loopback test, you can detect and isolate equipment malfunctions by testing the connection between the 4xT 12in1 Serial Interface SPA and a remote device such as a modem or a channel service unit (CSU) or a data service unit (DSU). The loopback command places an interface in loopback mode, which enables test packets that are generated from the ping command to loop through a remote device or Smart Serial cable. If the packets complete the loop, the connection is good. If not, you can isolate a fault to the remote device or Smart Serial cable in the path of the loopback test.

**Note** You must configure a clock rate on the port before performing a loopback test. However, if no cable is attached to the port, the port is administratively up, and the port is in loopback mode; you do not have to configure a clock rate on the port before performing a loopback test.

Depending on the mode of the port, issuing the loopback command checks the following path:

- When no Smart Serial cable is attached to the 4xT 12in1 Serial Interface SPA port, or if a data circuit-terminating equipment (DCE) cable is attached to a port that is configured as line protocol up, the loopback command tests the path between the network processing engine and the interface port only (without leaving the network processing engine and port adapter).
- When a data terminal equipment (DTE) cable is attached to the port, the loopback command tests the path between the network processing engine and the near (network processing engine) side of the DSU or modem to test the 4xT 12in1 Serial Interface SPA and Smart Serial cable. (The X.21 DTE interface cable does not support this loopback test; see the following Note.)

**Note** The X.21 interface definition does not include a loopback definition. On the 4xT 12in1 Serial Interface SPA port adapter, the X.21 DTE interface does not support the loopback function. Because of the internal clock signal present on the 4xT 12in1 Serial Interface SPAs, loopback will function on an X.21 DCE interface.

If loopback is configured on the Serial interface or at the peer device, loopback status will be indicated in the line protocol section of show interface provided keepalives are enabled. If keepalives are disabled, the protocol has no way of detecting the loopback condition.