Configuring Channelized SONET/SDH

This module describes the configuration of Channelized SONET/SDH.

Feature History for Configuring Channelized SONET/SDH

Release	Modification
Release 3.9.0	Support for the following SPA was introduced on the Cisco ASR 9000 Series Router: • Cisco 2-Port Channelized OC-12/DS0 SPA
Release 4.0.0	Support for the following SPA was introduced on the Cisco ASR 9000 Series Router: • Cisco 1-Port Channelized OC-48/STM-16 SPA Support for SDH, E3, E1, and POS channelization was added for the Cisco 2-Port Channelized OC-12/DS0 and Cisco 1-Port Channelized OC-48/STM-16 SPAs.
Release 4.0.1	Support for the following SPA was introduced on the Cisco ASR 9000 Series Router: • Cisco 1-Port Channelized OC-3/STM-1 SPA

- Configuring Channelized SONET/SDH, on page 1
- Prerequisites for Configuring Channelized SONET/SDH, on page 2
- Information About Configuring Channelized SONET/SDH, on page 2
- How to Configure Channelized SONET/SDH, on page 13
- Configuration Examples for Channelized SONET, on page 41

Configuring Channelized SONET/SDH

This module describes the configuration of Channelized SONET/SDH.

Feature History for Configuring Channelized SONET/SDH

Release	Modification
Release 3.9.0	Support for the following SPA was introduced on the Cisco ASR 9000 Series Router: • Cisco 2-Port Channelized OC-12/DS0 SPA
Release 4.0.0	Support for the following SPA was introduced on the Cisco ASR 9000 Series Router: • Cisco 1-Port Channelized OC-48/STM-16 SPA Support for SDH, E3, E1, and POS channelization was added for the Cisco 2-Port Channelized OC-12/DS0 and Cisco 1-Port Channelized OC-48/STM-16 SPAs.
Release 4.0.1	Support for the following SPA was introduced on the Cisco ASR 9000 Series Router: • Cisco 1-Port Channelized OC-3/STM-1 SPA

Prerequisites for Configuring Channelized SONET/SDH

You must be in a user group associated with a task group that includes the proper task IDs. The command reference guides include the task IDs required for each command. If you suspect user group assignment is preventing you from using a command, contact your AAA administrator for assistance.

Before configuring Channelized SONET/SDH, be sure that the following tasks and conditions are met:

- You have at least one of the following SPAs installed in your chassis:
  - Cisco 1-Port Channelized OC-3/STM-1 SPA
  - Cisco 2-Port Channelized OC-12c/DS0 SPA
  - Cisco 1-Port Channelized OC-48/STM-16 SPA
- You should know how to apply and specify the SONET controller name and *interface-path-id* with the generalized notation *rack/slot/module/port*. The SONET controller name and *interface-path-id* are required with the **controller sonet** command.

Information About Configuring Channelized SONET/SDH

To configure Channelized SONET/SDH, you must understand these concepts:

Channelized SONET Overview

Synchronous Optical Network (SONET) is an American National Standards Institute (ANSI) specification format used in transporting digital telecommunications services over optical fiber.

Synchronous Digital Hierarchy (SDH) is the international equivalent of SONET.

Channelized SONET provides the ability to transport SONET frames across multiplexed T3/E3 and virtual tributary group (VTG) channels.

Channelized SONET is supported on the following SPAs:

- Cisco 1-Port Channelized OC-48/STM-16 SPA
- Cisco 1-Port Channelized OC-3/STM-1 SPA
- Cisco 2-Port Channelized OC-12c/DS0 SPA

Channelized SDH is supported on the following SPAs:

- Cisco 1-Port Channelized OC-48/STM-16 SPA
- Cisco 1-Port Channelized OC-3/STM-1 SPA
- Cisco 2-Port Channelized OC-12c/DS0 SPA

SONET uses Synchronous Transport Signal (STS) framing. An STS is the electrical equivalent to an optical carrier 1 (OC-1).

SDH uses Synchronous Transport Mode (STM) framing. An STM-1 is the electrical equivalent to 3 optical carrier 1s (OC-1s).

A channelized SONET interface is a composite of STS streams, which are maintained as independent frames with unique payload pointers. The frames are multiplexed before transmission.

When a line is channelized, it is logically divided into smaller bandwidth channels called *paths*. These paths carry the SONET payload. The sum of the bandwidth on all paths cannot exceed the line bandwidth.

When a line is not channelized, it is called *clear channel*, and the full bandwidth of the line is dedicated to a single channel that carries broadband services.

An STS stream can be channelized into the following types of channels:

- T3/E3
- VT1.5 mapped T1
- Packet over SONET/SDH (POS) (OC12 and OC48 only)

The T3/E3 channels can be channelized further into T1s, and the T1s can be channelized into time slots (DS0s), except on the 1-Port Channelized OC-48/STM-16 SPA, which does not support T1 or DS0s.

Channelizing a SONET line consists of two primary processes:

- Configuring the controller
- Configuring the interface into channelized paths

You configure the controller first by setting the mode of the STS path. The mode can be set to T3, or VT1.5-mapped T1, or POS, depending on your hardware support.

Note POS is supported only on the STS-3c and STS-12c paths on the Cisco 1-Port Channelized OC-12/DS0 SPA and on the STS-3c, STS-12c, and STS-48c paths on the Cisco 1-Port Channelized OC-48/STM-16 SPA.

When the mode is specified, the respective controller is created, and the remainder of the configuration is applied on that controller. For example, mode T3 creates a T3 controller. The T3 controller can then be configured to a serial channel, or it can be further channelized to carry T1s, and those T1s can be configured to serial interfaces.

Depending on the support for your installed SPA, each STS path can be independently configured into T3s, E3s, or VTGs, and so on.

This figure shows an example of three STS paths for a SONET controller. However, the 2-Port Channelized OC-12/DS0 SPA supports up to 12 STS paths, and the 1-Port Channelized OC-48/STM-16 SPA supports up to 48 STS paths, but the 1-Port Channelized OC-48/STM-16 SPA does not support VTGs.

Figure 1: SONET Controller STS Paths

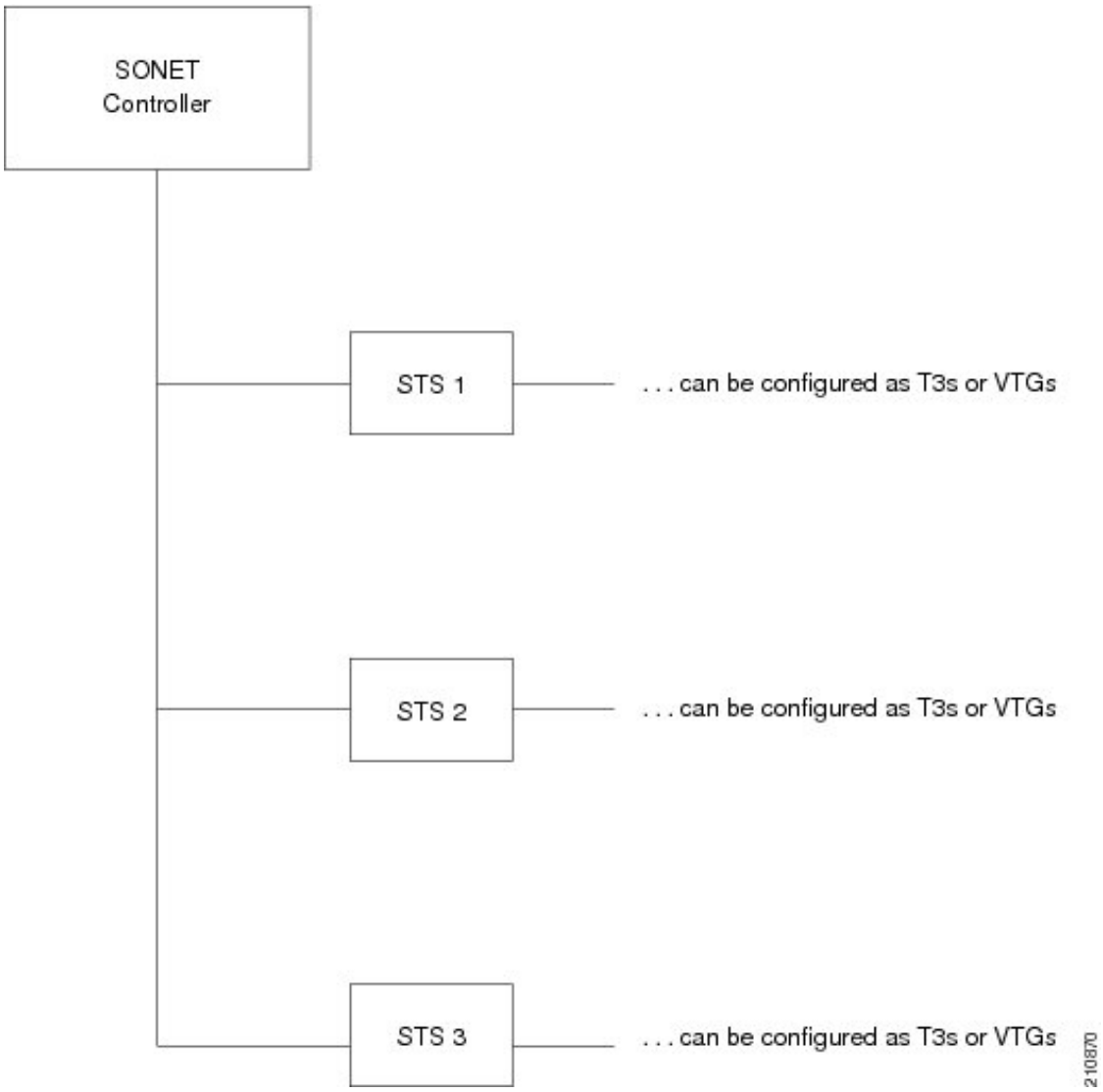

This figure shows an example of some SONET controller configuration combinations.

Note The 1-Port Channelized OC-48/STM-16 SPA on the Cisco ASR 9000 Series Router does not support VTGs.

Figure 2: SONET Controller Configuration Combinations

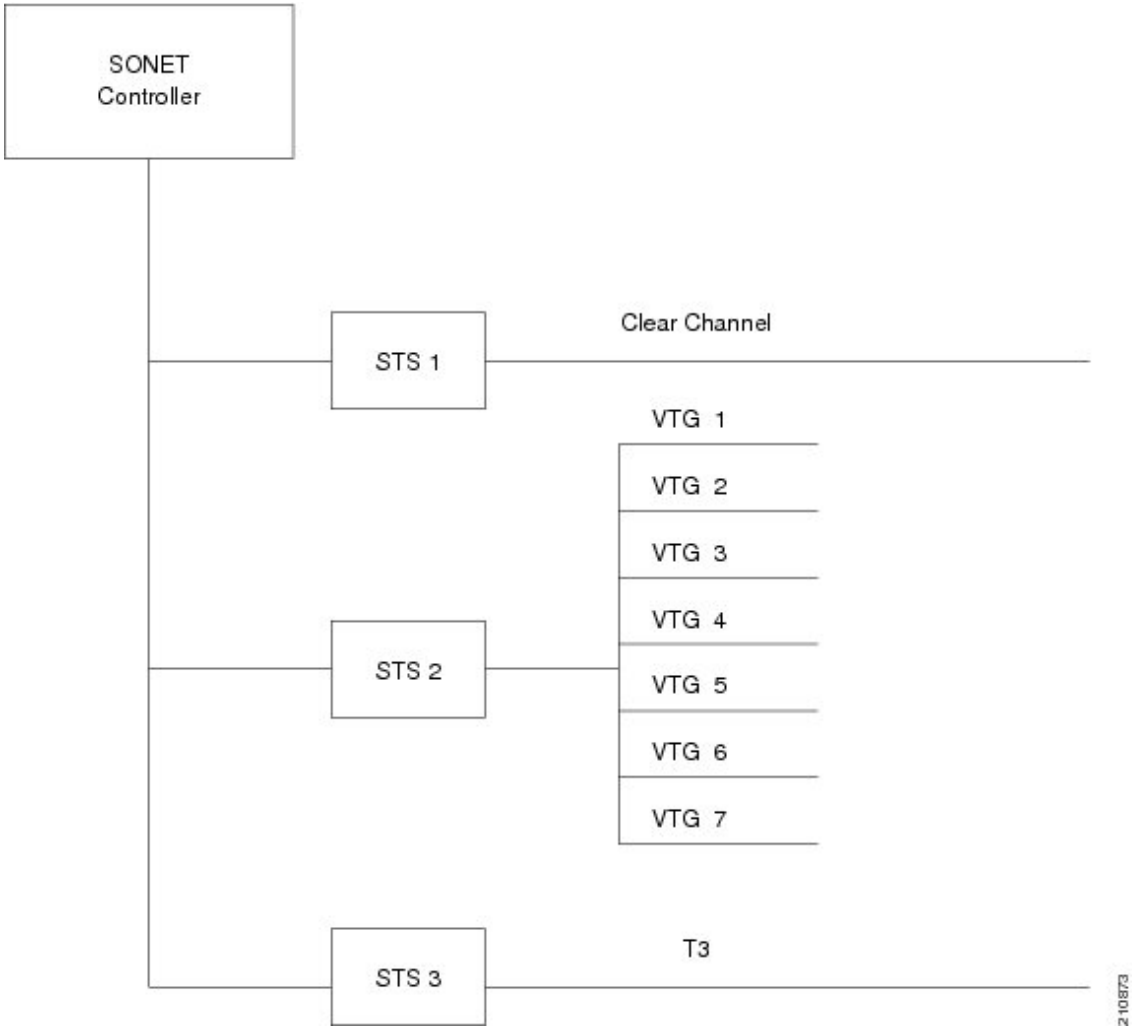

This figure shows the T3 paths that can be configured.

Note Channelized T3 paths are only supported on the 1-Port Channelized OC-3/STM-1 SPA and 2-Port Channelized OC-12c/DS0 SPA.

Figure 3: SONET T3 Channelized Paths

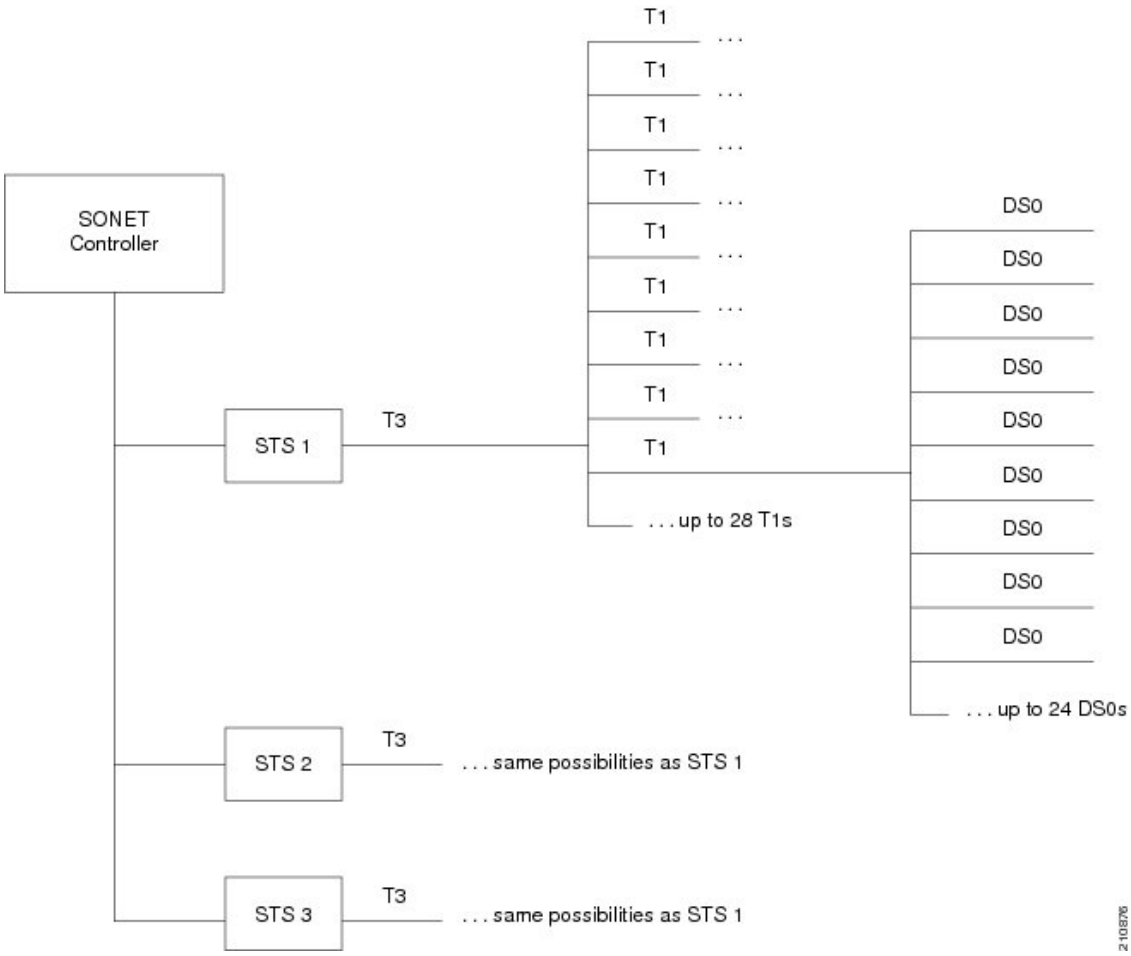

This figure shows the VTG paths that can be configured.

Note VTG paths are only supported on the Cisco 1-Port Channelized OC-3/STM-1 SPA and Cisco 2-Port Channelized OC-12c/DS0 SPA on the Cisco ASR 9000 Series Router.

Figure 4: SONET VTG Channelized Paths

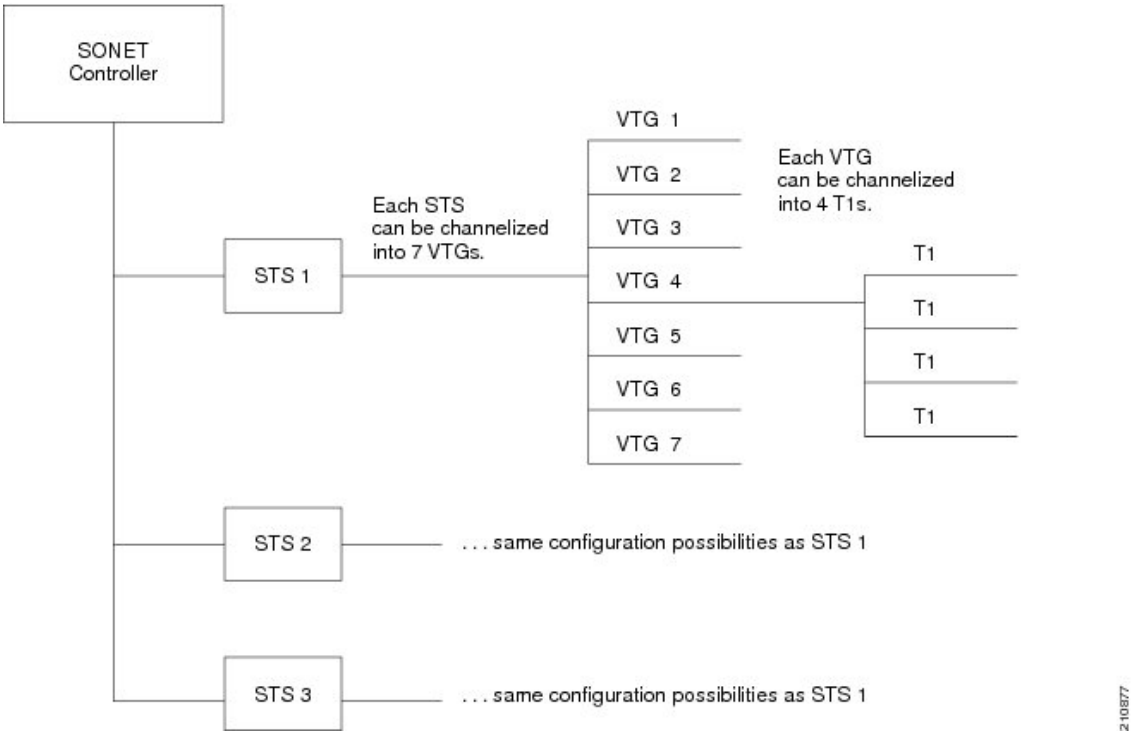

Channelized SDH Overview

Synchronous Digital Hierarchy (SDH) is the international equivalent of SONET.

Channelized SDH is supported on the following SPAs:

- Cisco 1-Port Channelized OC-48/STM-16 SPA
- Cisco 1-Port Channelized OC-3/STM-1 SPA
- Cisco 2-Port Channelized OC-12/DS0 SPA

A Synchronous Transport Module (STM) signal is the Synchronous Digital Hierarchy (SDH) equivalent of the SONET STS, but the numbers are different for each bandwidth. In this guide, the STM term refers to both path widths and optical line rates. The paths within an STM signals are called administrative units (AUs).

A summary of the basic terminology differences between SONET and SDH is as follows:

- SONET STS is equivalent to SDH administrative unit (AU)
- SONET VT is equivalent to SDH tributary unit (TU)
- SDH basic building blocks are STM-1 (equivalent to STS-3) and STM-0 (equivalent to STS-1)

An administrative unit (AU) is the information structure that provides adaptation between the higher-order path layer and the multiplex section layer. It consists of an information payload (the higher-order virtual container) and an administrative unit pointer, which indicates the offset of the payload frame start relative to the multiplex section frame start.

An AU can be channelized into tributary units (TUs) and tributary unit groups (TUGs).

An administrative unit 4 (AU-4) consists of three STM-1s or an STM-3.

An administrative unit 3 (AU-3) consists of one STM-1.

An administrative unit group (AUG) consists of one or more administrative units occupying fixed, defined positions in an STM payload.

Table 1: SONET and SDH Terminology Equivalencies

SONET Term	SDH Term
SONET	SDH
STS-3c	AU-4
STS-1	AU-3
VT	TU
SPE	VC
Section	Regenerator Section
Line	Multiplex Section
Path	Path

On the Cisco ASR 9000 Series Router, the following levels of SDH channelization are supported:

- 1-Port Channelized OC-3/STM-1 SPA
  - AU4 to TUG-3 to TUG-2 to VC-12 to E1 to NxDS0
  - AU4 to TUG-3 to VC-3 to DS3 (Clear Channel)
  - AU4 to TUG-3 to VC-3 to E3 (Clear Channel)
  - AU3 to TUG-2 to VC-11 to DS1 to NxDS0
- 2-Port Channelized OC-12/DS0 SPA
  - AU-4-4c (VC-4-4c)
  - AU-4 (VC-4)
  - AU-4 to TUG-3 to VC-3 to DS3
  - AU-4 to TUG-3 to VC-3 to E3
  - AU-4 to TUG-3 to TUG-2 to VC-11 to T1 to NxDS0
  - AU-4 to TUG-3 to TUG-2 to VC-12 to E1to NxDS0

    - AU-3 to VC-3 to DS3
    - AU-3 to TUG-2 to VC-11 to T1 to NxDS0
    - AU-3 to TUG-2 to VC-12 to E1to NxDS0
    - AU-3 to VC-3 to E3
    - AU-3 to VC-3 to DS3 to T1 to NxDS0
    - AU-3 to VC-3 to DS3 to E1 to NxDS0
- 1-Port Channelized OC-48/STM-16 SPA
    - DS3
    - E3
    - AU-3 (VC-3)
    - AU-4 (VC-4)
    - AU-4-4c (VC-4-4c)
    - AU-4-16c (VC-4-16c)

This figure shows an example of SDH AU-3 paths that can be configured on certain supported SPAs.

Note The 1-Port Channelized OC-48/STM-16 SPA does not support further channelization of AU-3 paths into T1s.

Figure 5: SDH AU3 Paths

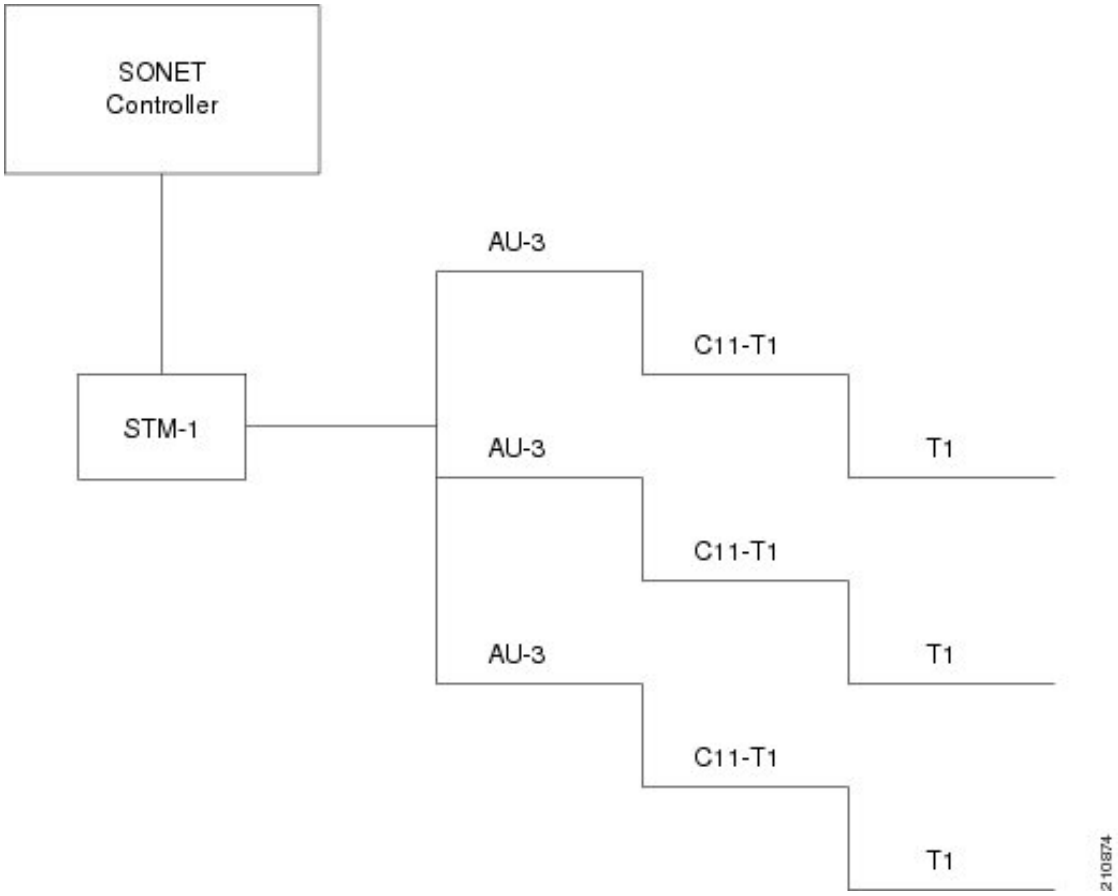

This figure shows the SDH AU4 paths that can be configured on supported SPAs.

Note The 1-Port Channelized OC-48/STM-16 SPA only supports channelization to the T3 or E3 level. Further channelization of AU-4 paths is not supported.

Figure 6: SDH AU4 Paths

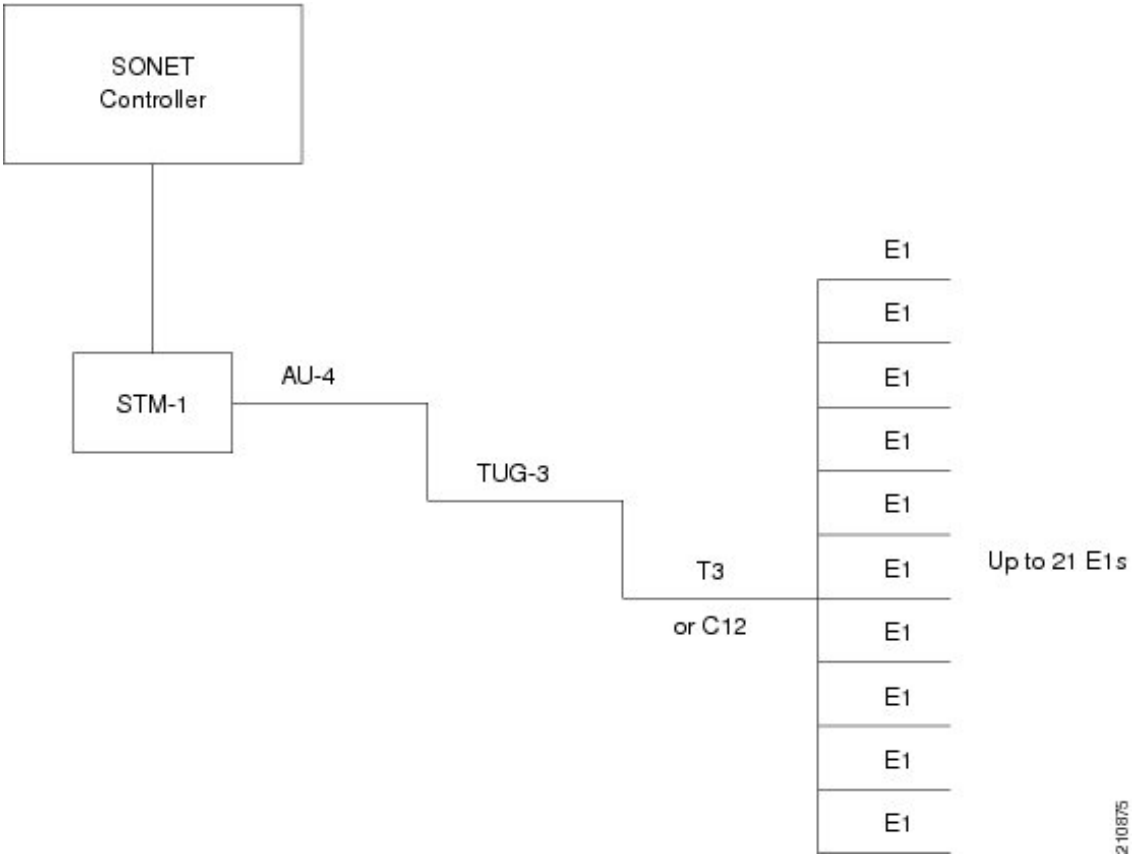

Default Configuration Values for Channelized SONET/SDH

This table describes the default configuration parameters that are present on the Channelized SONET/SDH.

Table 2: SONET/SDH Controller Default Cit onfiguration Values

Parameter	Default Value	Configuration File Entry
Clock source	line	**clock source** {**internal** | **line**}
SONET framing	sonet	**framing** {**sdh** | **sonet**}

How to Configure Channelized SONET/SDH

This section contains the following procedures:

Configuring SONET T3 and VT1.5-Mapped T1 Channels

This task explains how to configure a SONET line into T3 and VT-mapped T1 Channels.

Before you begin

- You should know how to configure the SONET controller as specified in the How to Configure Channelized SONET/SDH section of the *Configuring Clear Channel SONET Controllers* module.
- STS paths can be channelized into T3s on the following SPAs:
  - Cisco 1-Port Channelized OC-48/STM-16 SPA
  - Cisco 1-Port Channelized OC-3/STM-1 SPA
  - Cisco 2-Port Channelized OC-12/DS0 SPA
- STS paths can be channelized into VTG mapped T1s on the following SPA:
  - Cisco 1-Port Channelized OC-3/STM-1 SPA
  - Cisco 2-Port Channelized OC-12/DS0 SPA
- T3 paths can be channelized into T1s or E1s on the following SPA:
  - Cisco 1-Port Channelized OC-3/STM-1 SPA
  - Cisco 2-Port Channelized OC-12/DS0 SPA
- T1 paths can be channelized into NxDS0s on the Cisco 2-Port Channelized OC-12/DS0 SPA.

Restrictions

T1s and E1s are not supported on the Cisco 1-Port Channelized OC-48/STM-16 SPA.

SUMMARY STEPS

1. **configure**
2. **controller sonet** *interface-path-id*
3. **clock source** {**internal** | **line**}
4. **framing sonet**
5. **sts** *number*
6. **mode** *mode*
7. **width** *number*
8. **root**
9. **controller** *controllerName instance*
10. **mode** *mode*
11. **root**

12. **controller t1** *interface-path-id*
13. **channel-group** *number*
14. **timeslots** *num1:num2:num3:num4*
15. or
16. **timeslots** *range1-range2*
17. **show configuration**
18. **root**
19. **interface serial** *interface-path-id*
20. **encapsulation** {**frame-relay** | **hdlc** | **ppp**}
21. **ipv4** *ip-address mask*
22. **no shutdown**
23. **end** or **commit**
24. **show controllers sonet** *interface-path-id*

DETAILED STEPS

	Command or Action	Purpose
Step 1	**configure** **Example:** `RP/0/RSP0/CPU0:router# configure`	Enters global configuration mode.
Step 2	**controller sonet** *interface-path-id* **Example:** `RP/0/RSP0/CPU0:router(config)# controller sonet 0/1/1/0`	Enters SONET controller configuration submode and specifies the SONET controller name and *interface-path-id* with the *rack/slot/module/port* notation.
Step 3	**clock source** {**internal** | **line**} **Example:** `RP/0/RSP0/CPU0:router(config-sonet)# clock source internal`	Configures the SONET port transmit clock source, where the **internal** keyword sets the internal clock and the **line** keyword sets the clock recovered from the line. • Use the **line** keyword whenever clocking is derived from the network. Use the **internal** keyword when two routers are connected back to back or over fiber for which no clocking is available. • **line** is the default keyword. **Note** • Internal clocking is required for SRP interfaces.
Step 4	**framing sonet** **Example:** `RP/0/RSP0/CPU0:router(config-sonet)# framing sonet`	Configures the controller for SONET framing. SONET framing (**sonet**) is the default.

	Command or Action	Purpose
Step 5	**sts** *number* **Example:** `RP/0/RSP0/CPU0:router(config-sonet)# sts 1`	Configures the STS stream specified by *number*. The ranges are: • 1 to 48—1 Port Channelized OC-48/STM-16 SPA • 1 to 3—1-Port Channelized OC-3/STM-1 SPA • 1 to 12—2-Port Channelized OC-12/DS0 SPA
Step 6	**mode** *mode* **Example:** `RP/0/RSP0/CPU0:router(config-stsPath)# mode t3`	Sets the mode of interface at the STS level. The possible modes are: • t3—SONET path carrying T3 • vt15-t1—SONET path carrying virtual tributary 1.5 T1s (VT15 T1) (1-Port Channelized OC-3/STM-1 SPA and 2-Port Channelized OC-12c/DS0 SPA only) • pos—Packet over SONET
Step 7	**width** *number* **Example:** `RP/0/RSP0/CPU0:router(config-stsPath)# width 3`	Configures the number of the STS streams that are concatenated. The possible values for *number* are: • 1—Indicating one STS stream • 3—Indicating three STS streams (STS-3c) • 12—Indicating concatenation of 12 STS streams (STS-12c) • 48—Indicating concatenation of 48 STS streams (STS-48c). This is the default on the 1-Port Channelized OC-48/STM-16 SPA. Widths 3, and 12, and 48 are configured on STS paths at natural boundaries, which coincide with the following path numbers: • 1, 4, 7, 10, and so on, for STS-3c • 1, 13, 25, and 37 for STS-12c • 1 for STS-48c
Step 8	**root** **Example:** `RP/0/RSP0/CPU0:router(config-stsPath)# root`	Exits to global configuration mode.
Step 9	**controller** *controllerName instance* **Example:**	Enters controller configuration submode and specifies the controller name and instance identifier with the *rack/slot/module/port/controllerName* notation. The controller names are:

	Command or Action	Purpose
	`RP/0/RSP0/CPU0:router(config)# controller t3 0/1/1/0/0`	• t3—SONET path carrying T3 • vt15-t1—SONET path carrying virtual tributary 1.5 T1s (VT15 T1) (1-Port Channelized OC-3/STM-1 SPA and 2-Port Channelized OC-12c/DS0 SPA only)
Step 10	**mode** *mode* **Example:** `RP/0/RSP0/CPU0:router(config-t3)# mode t1`	Sets the mode of interface at this level. The possible modes are: • t1—Channelized into 28 T1s (1-Port Channelized OC-3/STM-1 SPA and 2-Port Channelized OC-12c/DS0 SPA only) • e1—Channelized into 21 E1s (1-Port Channelized OC-3/STM-1 SPA and 2-Port Channelized OC-12c/DS0 SPA only) • serial—Clear channel carrying an HDLC-like payload
Step 11	**root** **Example:** `RP/0/RSP0/CPU0:router(config-t3)# root`	Exits to global configuration mode.
Step 12	**controller t1** *interface-path-id* **Example:** `RP/0/RSP0/CPU0:router(config)# controller t1 0/1/1/0/0/0`	Enters T1 controller configuration submode and specifies the T1 controller name and *interface-path-id* with the *rack/slot/module/port/T3Num/T1num* notation. (1-Port Channelized OC-3/STM-1 SPA and 2-Port Channelized OC-12c/DS0 SPA only)
Step 13	**channel-group** *number* **Example:** `RP/0/RSP0/CPU0:router(config-t1)# channel-group 1`	Sets the channel group number to which time slots are assigned. The range is from 1 to 24.
Step 14	**timeslots** *num1:num2:num3:num4*	
Step 15	or	

Step 16	**timeslots** *range1-range2*
	Example:
	`RP/0/0/CPU0:router(config-t1-channel_group)# timeslots 1:3:7:9`
	`RP/0/0/CPU0:router(config-t1-channel_group)# timeslots 1-24`
		Specifies the time slots for the interface by number with the *num1:num2:num3:num4* notation, or by range with the *range1-range2* notation.

Step 17	**show configuration** **Example:**	Displays the contents of uncommitted configuration.

	Command or Action	Purpose
	`RP/0/RSP0/CPU0:router(config-t1-channel_group)# show configuration`	
Step 18	**root** **Example:** `RP/0/RSP0/CPU0:router(config-t3)# root`	Exits to global configuration mode.
Step 19	**interface serial** *interface-path-id* **Example:** `RP/0/RSP0/CPU0:router(config)# interface serial 0/1/1/0/0/0:0`	Specifies the complete interface number with the *rack/slot/module/port/T3Num/T1num:instance* notation.
Step 20	**encapsulation** {**frame-relay** | **hdlc** | **ppp**} **Example:** `RP/0/RSP0/CPU0:router(config-if)# encapsulation ppp`	Specifies the encapsulation type with the one of the following keywords: • **frame-relay**—Frame Relay network protocol • **hdlc**—High-level Data Link Control (HDLC) synchronous protocol • **ppp**—Point-to-Point Protocol
Step 21	**ipv4** *ip-address mask* **Example:** `RP/0/RSP0/CPU0:router(config-if)# ip address 10.10.10.10 255.255.255.255`	Assigns an IP address and subnet mask to the interface.
Step 22	**no shutdown** **Example:** `RP/0/RSP0/CPU0:router(config-if)# no shutdown`	Removes the shutdown configuration. **Note** • Removal of the shutdown configuration eliminates the forced administrative down on the interface, enabling it to move to an up or down state (assuming that the parent SONET layer is not configured administratively down).

Step 23	**end** or **commit**
	Example:
	`RP/0/0RSP0/CPU0:router(config-sonet)# end`
	or
	`RP/0/RSP0/CPU0:router(config-sonet)# commit`
		Saves configuration changes.
		• When you issue the **end** command, the system prompts you to commit changes:
		`Uncommitted changes found, commit them before exiting(yes/no/cancel)? [cancel]:`
		• Entering **yes** saves configuration changes to the running configuration file, exits the configuration session, and returns the router to EXEC mode.

	Command or Action	Purpose
		• Entering **no** exits the configuration session and returns the router to EXEC mode without committing the configuration changes. • Entering **cancel** leaves the router in the current configuration session without exiting or committing the configuration changes. • Use the **commit** command to save the configuration changes to the running configuration file and remain within the configuration session.
Step 24	**show controllers sonet** *interface-path-id* **Example:** `RP/0/RSP0/CPU0:router# show controllers sonet 0/1/1/0`	Verifies the SONET controller configuration.

Configuring Packet over SONET Channels

This task explains how to configure Packet over SONET (POS) channels on SPAs supporting channelized SONET.

Before you begin

You have one of the following SPAs installed:

- Cisco 1-Port Channelized OC-48/STM-16 SPA
- Cisco 2-Port Channelized OC-12/DS0 SPA

SUMMARY STEPS

1. **configure**
2. **controller sonet** *interface-path-id*
3. **clock source** {**internal** | **line**}
4. **framing** {**sdh** | **sonet**}
5. **sts** *number*
6. **width** *number*
7. **mode** *mode* **scramble**
8. **root**
9. **interface pos** *interface-path-id*
10. **encapsulation** [**hdlc** | **ppp** | **frame-relay** [**IETF**]]
11. **pos crc** {**16** | **32**}
12. **mtu** *value*
13. **no shutdown**
14. **end** or **commit**
15. **show interfaces pos** *interface-path-id*

DETAILED STEPS

	Command or Action	Purpose
Step 1	**configure** **Example:** `RP/0/RSP0/CPU0:router# configure`	Enters global configuration mode.
Step 2	**controller sonet** *interface-path-id* **Example:** `RP/0/RSP0/CPU0:router(config)# controller sonet 0/1/1/0`	Enters SONET controller configuration submode and specifies the SONET controller name and *interface-path-id* with the *rack/slot/module/port* notation.
Step 3	**clock source** {**internal** | **line**} **Example:** `RP/0/RSP0/CPU0:router(config-sonet)# clock source internal`	Configures the SONET port transmit clock source, where the **internal** keyword sets the internal clock and the **line** keyword sets the clock recovered from the line. • Use the **line** keyword whenever clocking is derived from the network. Use the **internal** keyword when two routers are connected back to back or over fiber for which no clocking is available. • **line** is the default keyword. **Note** • Internal clocking is required for SRP interfaces.
Step 4	**framing** {**sdh** | **sonet**} **Example:** `RP/0/RSP0/CPU0:router(config-sonet)# framing sonet`	(Optional) Configures the controller framing with either the **sdh** keyword for Synchronous Digital Hierarchy (SDH) framing or the **sonet** keyword for SONET framing. SONET framing (**sonet**) is the default.
Step 5	**sts** *number* **Example:** `RP/0/RSP0/CPU0:router(config-sonet)# sts 1`	Configures the STS stream specified by *number*. The ranges are: • 1 to 12 on the 2-Port Channelized OC12c/DS0 SPA • 1 to 48 on the 1 Port Channelized OC48/DS3 SPA
Step 6	**width** *number* **Example:** `RP/0/RSP0/CPU0:router(config-stsPath)# width 3`	Configures the number of the STS streams that are concatenated. The possible values for *number* are: • 3—Indicating three STS streams (STS-3c) • 12—Indicating concatenation of 12 STS streams (STS-12c) • 48—Indicating concatenation of 48 STS streams (STS-48c)

	Command or Action	Purpose
		Widths 3, 12, and 48 are configured on STS paths at natural boundaries, which coincide with the following path numbers: • 1, 4, 7, 10, and so on, for STS-3c • 1, 13, 25, and 37 for STS-12c • 1 for STS-48c **Note** • POS interfaces are not supported when width is 1.
Step 7	**mode** *mode* **scramble** **Example:** `RP/0/RSP0/CPU0:router(config-stsPath)# mode pos scramble`	Sets the mode of interface at the STS level. Set the mode to pos to create POS interface (OC12 and OC48 only).
Step 8	**root** **Example:** `RP/0/RSP0/CPU0:router(config-stsPath)# root`	Exits to global configuration mode.
Step 9	**interface pos** *interface-path-id* **Example:** `RP/0/RSP0/CPU0:router(config)# interface POS 0/1/1/0`	Specifies the POS interface name and notation *rack/slot/module/port,* and enters interface configuration mode.
Step 10	**encapsulation** [**hdlc** | **ppp** | **frame-relay** [**IETF**]] **Example:** `RP/0/RSP0/CPU0:router(config-if)# encapsulation hdlc`	(Optional) Configures the interface encapsulation parameters and details such as HDLC or PPP. The default is HDLC.
Step 11	**pos crc** {**16** | **32**} **Example:** `RP/0/RSP0/CPU0:router(config-if)# pos crc 32`	(Optional) Configures the CRC value for the interface. Enter the **16** keyword to specify 16-bit CRC mode, or enter the **32** keyword to specify 32-bit CRC mode. The default CRC is **32**.
Step 12	**mtu** *value* **Example:** `RP/0/RSP0/CPU0:router(config-if)# mtu 4474`	(Optional) Configures the POS MTU value. The range is 64–65535.
Step 13	**no shutdown** **Example:**	Removes the shutdown configuration.

	Command or Action	Purpose
	`RP/0/RSP0/CPU0:router (config-if)# no shutdown`	**Note** • Removal of the shutdown configuration eliminates the forced administrative down on the interface, enabling it to move to an up or down state (assuming that the parent SONET layer is not configured administratively down).

Step 14	**end** or **commit**
	Example:
	`RP/0/RSP0/CPU0:router(config-sonet)# end`
	or
	`RP/0/RSP0/CPU0:router(config-sonet)# commit`
		Saves configuration changes.
		• When you issue the **end** command, the system prompts you to commit changes:
		`Uncommitted changes found, commit them before exiting(yes/no/cancel)? [cancel]:`
		• Entering **yes** saves configuration changes to the running configuration file, exits the configuration session, and returns the router to EXEC mode.
		• Entering **no** exits the configuration session and returns the router to EXEC mode without committing the configuration changes.
		• Entering **cancel** leaves the router in the current configuration session without exiting or committing the configuration changes.
		• Use the **commit** command to save the configuration changes to the running configuration file and remain within the configuration session.

Step 15	**show interfaces pos** *interface-path-id* **Example:** `RP/0/0/CPU0:router# show interfaces pos 0/1/1/0`	(Optional) Displays the interface configuration.

Configuring a Clear Channel SONET Controller for T3

This task explains how to configure a SONET line into a single T3 serial channel called *clear channel*. Clear channel is established by setting the T3 controller mode to serial.

Before you begin

- You should know how to configure the SONET controller as specified in the How to Configure Channelized SONET/SDH section of the *Configuring Clear Channel SONET Controllers* module.

SUMMARY STEPS

1. **configure**
2. **controller sonet** *interface-path-id*
3. **clock source** {**internal** | **line**}
4. **framing sonet**
5. **sts** *number*
6. **mode t3**
7. **root**
8. **controller t3** *interface-path-id*
9. **mode serial**
10. **root**
11. **interface serial** *interface-path-id*
12. **encapsulation** {**frame-relay** | **hdlc** | **ppp**}
13. **ipv4** *ip-address mask*
14. **no shutdown**
15. **end** or **commit**
16. **show controllers sonet** *interface-path-id*

DETAILED STEPS

	Command or Action	Purpose
Step 1	**configure** **Example:** `RP/0/RSP0/CPU0:router# configure`	Enters global configuration mode.
Step 2	**controller sonet** *interface-path-id* **Example:** `RP/0/RSP0/CPU0:router(config)# controller sonet 0/1/1/0`	Enters SONET controller configuration submode and specifies the SONET controller name and *interface-path-id* with the *rack/slot/module/port* notation.
Step 3	**clock source** {**internal** | **line**} **Example:** `RP/0/RSP0/CPU0:router(config-sonet)# clock source internal`	Configures the SONET port transmit clock source, where the **internal** keyword sets the internal clock and the **line** keyword sets the clock recovered from the line. • Use the **line** keyword whenever clocking is derived from the network. Use the **internal** keyword when two routers are connected back to back or over fiber for which no clocking is available. • **line** is the default keyword. **Note** • Internal clocking is required for SRP interfaces.

	Command or Action	Purpose
Step 4	**framing sonet** **Example:** `RP/0/RSP0/CPU0:router(config-sonet)# framing sonet`	Configures the controller for SONET framing. SONET framing (**sonet**) is the default.
Step 5	**sts** *number* **Example:** `RP/0/RSP0/CPU0:router(config-sonet)# sts 1`	Configures the STS stream specified by *number*. The ranges are: • 1 to 48—1-Port Channelized OC-48/DS3 SPA • 1 to 3—1-Port Channelized OC-3/STM-1 SPA • 1 to 12—2-Port Channelized OC-12/DS0 SPA
Step 6	**mode t3** **Example:** `RP/0/RSP0/CPU0:router(config-stsPath)# mode t3`	Sets the mode of the interface at the STS level for T3.
Step 7	**root** **Example:** `RP/0/RSP0/CPU0:router(config-stsPath)# root`	Exits to global configuration mode.
Step 8	**controller t3** *interface-path-id* **Example:** `RP/0/RSP0/CPU0:router(config)# controller t3 0/1/1/0/0`	Enters T3 controller configuration submode and specifies the T3 controller name and interface-path-id identifier with the *rack/slot/module/port/T3Num* notation.
Step 9	**mode serial** **Example:** `RP/0/RSP0/CPU0:router(config-t3)# mode serial`	Sets the mode of the interface to serial to establish a clear channel.
Step 10	**root** **Example:** `RP/0/RSP0/CPU0:router(config-t3)# root`	Exits to global configuration mode.
Step 11	**interface serial** *interface-path-id* **Example:** `RP/0/RSP0/CPU0:router(config)# interface serial 0/1/1/0/0/0:0`	Specifies the complete interface number with the *rack/slot/module/port/T3Num/T1num:instance* notation.
Step 12	**encapsulation** {**frame-relay** | **hdlc** | **ppp**} **Example:**	Specifies the encapsulation type with the one of the following keywords:

	Command or Action	Purpose
	`RP/0/RSP0/CPU0:router(config-if)# encapsulation ppp`	• **frame-relay**—Frame Relay network protocol • **hdlc**—High-level Data Link Control (HDLC) synchronous protocol • **ppp**—Point-to-Point Protocol
Step 13	**ipv4** *ip-address mask* **Example:** `RP/0/RSP0/CPU0:router(config-if)# ip address 10.10.10.10 255.255.255.255`	Assigns an IP address and subnet mask to the interface.
Step 14	**no shutdown** **Example:** `RP/0/RSP0/CPU0:router(config-if)# no shutdown`	Removes the shutdown configuration. **Note** • Removal of the shutdown configuration eliminates the forced administrative down on the interface, enabling it to move to an up or down state (assuming that the parent SONET layer is not configured administratively down).

Step 15	**end** or **commit**
	Example:
	`RP/0/RSP0/CPU0:router(config-sonet)# end`
	or
	`RP/0/RSP0/CPU0:router(config-sonet)# commit`
		Saves configuration changes.
		• When you issue the **end** command, the system prompts you to commit changes:
		`Uncommitted changes found, commit them before exiting(yes/no/cancel)? [cancel]:`
		• Entering **yes** saves configuration changes to the running configuration file, exits the configuration session, and returns the router to EXEC mode.
		• Entering **no** exits the configuration session and returns the router to EXEC mode without committing the configuration changes.
		• Entering **cancel** leaves the router in the current configuration session without exiting or committing the configuration changes.
		• Use the **commit** command to save the configuration changes to the running configuration file and remain within the configuration session.

Step 16	**show controllers sonet** *interface-path-id* **Example:** `RP/0//RSP0/CPU0:router# show controllers sonet 0/1/1/0`	Verifies the SONET controller configuration.

Configuring Channelized SONET APS

This task explains how to configure APS for channelized SONET lines.

Before you begin

- You should know how to configure the SONET controller as specified in the How to Configure Channelized SONET/SDH section of the *Configuring Clear Channel SONET Controllers* module.
- You should know how to configure the SONET APS as specified in the Configuring SONET APS section of the *Configuring Clear Channel SONET Controllers* module.

Restrictions

- SONET APS is not supported on the 1-Port Channelized OC-48/STM-16 SPA.
- The Cisco ASR 9000 Series Router supports multirouter APS only on the following SPAS:
  - 1-Port Channelized OC-3/STM-1 SPA
  - 2-Port Channelized OC-12c/DS0 SPA

SUMMARY STEPS

1. **aps group** *number*
2. **channel 0 local sonet** *interface*
3. or
4. **channel 0 remote** *ip-address*
5. **channel 1 local sonet** *interface*
6. or
7. **channel 1 remote** *ip-address*
8. **signalling** {**sonet** | **sdh**}
9. **end** or **commit**
10. **show aps**
11. **show aps group** [*number*]

DETAILED STEPS

	Command or Action	Purpose
Step 1	**aps group** *number* **Example:** `RP/0/RSP0/CPU0:router(config)# aps group 1`	Adds an APS group with a specified number and enters APS group configuration mode. • Use the **aps group** command in global configuration mode. • To remove a group, use the **no** form of this command, as in: **no aps group** *number*, where the value range is from 1 to 255.

	Command or Action	Purpose
		Note • To use the **aps group** command, you must be a member of a user group associated with the proper task IDs for APS commands. • The **aps group** command is used even when a single protect group is configured.
Step 2	**channel 0 local sonet** *interface*	
Step 3	or	

Step 4	**channel 0 remote** *ip-address*
	Example:
	`RP/0/RSP0/CPU0:router(config-aps)# channel 0 local SONET 0/0/0/1`
	`or`
	`RP/0/RSP0/CPU0:router(config-aps)# channel 0 remote 172.18.69.123`
		Creates a protect channel for the APS group, where **0** designates a protect channel.
		Note • The protect channel must be assigned before the active channel can be assigned.
		• To configure APS where both channels are on one router, use the **channel local** command for both the protect and active channels. To configure APS using two different routers where the active channel is on one router and the protect channel is on another router, use the **channel local** command for either the protect or the active channel, but use the **channel remote** command for the other channel.

Step 5	**channel 1 local sonet** *interface*	
Step 6	or	

Step 7	**channel 1 remote** *ip-address*
	Example:
	`RP/0/RSP0/CPU0:router(config-aps)# channel 1 local SONET 0/0/0/2`
	`or`
	`RP/0/0/CPU0:router(config-aps)# channel 1 remote 172.18.69.123`
		Creates an active channel for the APS group, where **1** designates an active channel.
		Note • The active channel must be assigned after the protect channel is assigned.
		• To configure APS where both channels are on one router, use the **channel local** command for both the protect and active channels. To configure APS using two different routers where the active channel is on one router and the protect channel is on another router, use the **channel local** command for either the protect or the active channel, but use the **channel remote** command for the other channel.

	Command or Action	Purpose
Step 8	**signalling** {**sonet** | **sdh**} **Example:** `RP/0/RSP0/CPU0:router(config-aps)# signalling sonet`	Configures the K1K2 overhead byte used for automatic protection switching (APS). The keyword options are: • **sonet**—Sets signaling to SONET. • **sdh**—Sets signaling to Synchronous Digital Hierarchy (SDH).

Step 9	**end** or **commit**
	Example:
	`RP/0/RSP0/CPU0:router(config-sonet)# end`
	or
	`RP/0/RSP0/CPU0:router(config-sonet)# commit`
		Saves configuration changes.
		• When you issue the **end** command, the system prompts you to commit changes:
		`Uncommitted changes found, commit them before exiting(yes/no/cancel)? [cancel]:`
		• Entering **yes** saves configuration changes to the running configuration file, exits the configuration session, and returns the router to EXEC mode.
		• Entering **no** exits the configuration session and returns the router to EXEC mode without committing the configuration changes.
		• Entering **cancel** leaves the router in the current configuration session without exiting or committing the configuration changes.
		• Use the **commit** command to save the configuration changes to the running configuration file and remain within the configuration session.

Step 10	**show aps** **Example:** `RP/0/RSP0/CPU0:router# show aps`	(Optional) Displays the operational status for all configured SONET APS groups.
Step 11	**show aps group** [*number*] **Example:** `RP/0/RSP0/CPU0:router# show aps group 3`	(Optional) Displays the operational status for configured SONET APS groups. **Note** • The **show aps group** command is more useful than the **show aps** command when multiple groups are defined.

Configuring SDH AU-3

This section includes the following tasks:

Configuring SDH AU-3 Mapped to C11-T1 or C12-E1

This task explains how to configure SDH AU-3 with c11-t1 or c12-e1 mapping.

Before you begin

- You should know how to configure the SONET controller as specified in the How to Configure Channelized SONET/SDH section of the *Configuring Clear Channel SONET Controllers* module.

Restrictions

Channelized SDH AU-3 with c11-t1 or c12-e1 mapping is supported on the following SPAs:

- Cisco 1-Port Channelized OC-3/STM-1 SPA
- Cisco 2-Port Channelized OC-12c/DS0 SPA

SUMMARY STEPS

1. **configure**
2. **controller sonet** *interface-path-id*
3. **clock source** {**internal** | **line**}
4. **framing sdh**
5. **au** *number*
6. **mode** *mode*
7. **root**
8. **controller t1** *interface-path-id*
9. **channel-group** *number*
10. **timeslots** *num1:num2:num3:num4*
11. or
12. **timeslots** *range1-range2*
13. **show configuration**
14. **root**
15. **interface serial** *interface-path-id*
16. **encapsulation** {**frame-relay** | **hdlc** | **ppp**}
17. **ipv4** *ip-address mask*
18. **no shutdown**
19. **end** or **commit**
20. **show controllers sonet** *interface-path-id*

DETAILED STEPS

	Command or Action	Purpose
Step 1	**configure** **Example:** `RP/0/RSP0/CPU0:router# configure`	Enters global configuration mode.

	Command or Action	Purpose
Step 2	**controller sonet** *interface-path-id* **Example:** `RP/0/RSP0/CPU0:router(config)# controller sonet 0/1/1/0`	Enters SONET controller configuration submode and specifies the SONET controller name and interface-path-id identifier with the *rack/slot/module/port* notation.
Step 3	**clock source** {**internal** | **line**} **Example:** `RP/0/RSP0/CPU0:router(config-sonet)# clock source internal`	Configures the SONET port transmit clock source, where the **internal** keyword sets the internal clock and the **line** keyword sets the clock recovered from the line. • Use the **line** keyword whenever clocking is derived from the network. Use the **internal** keyword when two routers are connected back to back or over fiber for which no clocking is available. • **line** is the default keyword. **Note** • Internal clocking is required for SRP interfaces.
Step 4	**framing sdh** **Example:** `RP/0/RSP0/CPU0:router(config-sonet)# framing sdh`	Configures the controller framing for Synchronous Digital Hierarchy (SDH) framing. SONET framing (**sonet**) is the default.
Step 5	**au** *number* **Example:** `RP/0/RSP0/CPU0:router(config-sonet)# au 1`	Specifies the administrative unit (AU) group and enters AU path configuration mode. For AU-3, the valid range is: • 1 to 3—1-Port Channelized OC-3/STM-1 SPA • 1 to 12—2-Port Channelized OC-12c/DS0 SPA **Note** • The **au** command does not specify the AU type. It specifies the number of the AU group for the AU type that you want to configure. The range for the AU command varies based on whether you are configuring AU-3 or AU-4.
Step 6	**mode** *mode* **Example:** `RP/0/RSP0/CPU0:router(config-auPath)# mode c11-t1`	Sets the mode of interface at the AU level. AU-3 paths can be mapped to c11-t1 or c12-e1 on supported SPAs.
Step 7	**root** **Example:**	Exits to global configuration mode.

	Command or Action	Purpose
	`RP/0/RSP0/CPU0:router(config-auPath)# root`	
Step 8	**controller t1** *interface-path-id* **Example:** `RP/0/RSP0/CPU0:router(config)# controller T1 0/1/1/0/0/0/0`	Enters T1 controller configuration submode and specifies the T1 controller name and *interface-path-id* with the *rack/slot/module/port/auNum/t1Num* notation.
Step 9	**channel-group** *number* **Example:** `RP/0/RSP0/CPU0:router(config-t1)# channel-group 0`	Sets the channel-group number to which time slots are assigned. The range is from 1 to 28.
Step 10	**timeslots** *num1:num2:num3:num4*	
Step 11	or	

Step 12	**timeslots** *range1-range2*
	Example:
	`RP/0/RSP0/CPU0:router(config-t1-channel_group)# timeslots 1:3:7:9`
	`RP/0/RSP0/CPU0:router(config-t1-channel_group)# timeslots 1-12`
		Specifies time slots for the interface by number with the *num1:num2:num3:num4* notation, or by range with the *range1-range2* notation.

Step 13	**show configuration** **Example:** `RP/0/RSP0/CPU0:router(config-t1-channel_group)# show configuration`	Displays the contents of uncommitted configuration.
Step 14	**root** **Example:** `RP/0/RSP0/CPU0:router(config-t3)# root`	Exits to global configuration mode.
Step 15	**interface serial** *interface-path-id* **Example:** `RP/0/RSP0/CPU0:router(config)# interface serial 0/1/1/0/0/0:0`	Specifies the complete interface number with the *rack/slot/module/port/T3Num/T1num:instance* notation.
Step 16	**encapsulation** {**frame-relay** | **hdlc** | **ppp**} **Example:** `RP/0/RSP0/CPU0:router(config-if)# encapsulation frame-relay`	Specifies the encapsulation type with the one of the following keywords: • **frame-relay**—Frame Relay network protocol • **hdlc**—High-level Data Link Control (HDLC) synchronous protocol

	Command or Action	Purpose
		• **ppp**—Point-to-Point Protocol
Step 17	**ipv4** *ip-address mask* **Example:** `RP/0/RSP0/CPU0:router(config-if)# ip address 10.10.10.10 255.255.255.255`	Assigns an IP address and subnet mask to the interface.
Step 18	**no shutdown** **Example:** `RP/0/RSP0/CPU0:router(config-if)# no shutdown`	Removes the shutdown configuration. **Note** • Removal of the shutdown configuration eliminates the forced administrative down on the interface, enabling it to move to an up or down state (assuming that the parent SONET layer is not configured administratively down).

Step 19	**end** or **commit**
	Example:
	`RP/0/RSP0/CPU0:router(config-sonet)# end`
	or
	`RP/0/RSP0/CPU0:router(config-sonet)# commit`
		Saves configuration changes.
		• When you issue the **end** command, the system prompts you to commit changes:
		`Uncommitted changes found, commit them before exiting(yes/no/cancel)? [cancel]:`
		• Entering **yes** saves configuration changes to the running configuration file, exits the configuration session, and returns the router to EXEC mode.
		• Entering **no** exits the configuration session and returns the router to EXEC mode without committing the configuration changes.
		• Entering **cancel** leaves the router in the current configuration session without exiting or committing the configuration changes.
		• Use the **commit** command to save the configuration changes to the running configuration file and remain within the configuration session.

Step 20	**show controllers sonet** *interface-path-id* **Example:** `RP/0/RSP0/CPU0:router# show controllers sonet 0/1/1/0`	Verifies the SONET controller configuration.

Configuring SDH AU-3 Mapped to T3 or E3

This task explains how to configure SDH AU-3 mapped to T3 or E3.

Before you begin

- You should know how to configure the SONET controller as specified in the How to Configure Channelized SONET/SDH section of the *Configuring Clear Channel SONET Controllers* module.

Restrictions

Channelized SDH AU-3 with T3 or E3 mapping is supported on the following SPAs:

- Cisco 1-Port Channelized OC-48/STM-16 SPA
- Cisco 1-Port Channelized OC-3/STM-1 SPA
- Cisco 2-Port Channelized OC-12c/DS0 SPA

SUMMARY STEPS

1. **configure**
2. **controller sonet** *interface-path-id*
3. **clock source** {**internal** | **line**}
4. **framing sdh**
5. **au** *number*
6. **mode t3**
7. or
8. **mode e3**
9. **root**
10. **controller** {**t3** | **e3**} *interface-path-id*
11. **mode serial**
12. **show configuration**
13. **root**
14. **interface serial** *interface-path-id*
15. **encapsulation frame-relay** | **hdlc** | **ppp**
16. **ipv4** *ip-address mask*
17. **no shutdown**
18. **end** or **commit**
19. **show controllers sonet** *interface-path-id*

DETAILED STEPS

	Command or Action	Purpose
Step 1	**configure** **Example:** `RP/0/RSP0/CPU0:router# configure`	Enters global configuration mode.

	Command or Action	Purpose
Step 2	**controller sonet** *interface-path-id* **Example:** `RP/0/RSP0/CPU0:router(config)# controller sonet 0/1/1/0`	Enters SONET controller configuration submode and specifies the SONET controller name and interface-path-id identifier with the *rack/slot/module/port* notation.
Step 3	**clock source** {**internal** | **line**} **Example:** `RP/0/RSP0/CPU0:router(config-sonet)# clock source internal`	Configures the SONET port transmit clock source, where the **internal** keyword sets the internal clock and the **line** keyword sets the clock recovered from the line. • Use the **line** keyword whenever clocking is derived from the network. Use the **internal** keyword when two routers are connected back to back or over fiber for which no clocking is available. • **line** is the default keyword. **Note** • Internal clocking is required for SRP interfaces.
Step 4	**framing sdh** **Example:** `RP/0/RSP0/CPU0:router(config-sonet)# framing sdh`	Configures the controller framing for Synchronous Digital Hierarchy (SDH) framing. SONET framing (**sonet**) is the default.
Step 5	**au** *number* **Example:** `RP/0/RSP0/CPU0:router(config-sonet)# au 1`	Specifies the administrative unit (AU) group and enters AU path configuration mode. For AU-3, the valid range is: • 1 to 48—1-Port Channelized OC-48/DS3 SPA • 1 to 3—1-Port Channelized OC-3/STM-1 SPA • 1 to 12—2-Port Channelized OC-12c/DS0 SPA **Note** • The **au** command does not specify the AU type. It specifies the number of the AU group for the AU type that you want to configure. The range for the AU command varies based on whether you are configuring AU-3 or AU-4.
Step 6	**mode t3**	
Step 7	or	
Step 8	**mode e3** **Example:**	Sets the mode of interface at the AU level to T3 or E3.

	Command or Action	Purpose
	`RP/0/RSP0/CPU0:router(config-auPath)# mode t3`	
Step 9	**root** **Example:** `RP/0/RSP0/CPU0:router(config-auPath)# root`	Exits to global configuration mode.
Step 10	**controller** {**t3** | **e3**} *interface-path-id* **Example:** `RP/0/RSP0/CPU0:router(config)# controller T3 0/1/1/0/0`	Enters T3 or E3 controller configuration submode and specifies the T3 or E3 controller name and *interface-path-id* with the *rack/slot/module/port/auNum* notation.
Step 11	**mode serial** **Example:** `RP/0/RSP0/CPU0:router(config-t3)# mode serial`	Configures the mode of the port to be clear channel serial.
Step 12	**show configuration** **Example:** `RP/0/RSP0/CPU0:router(config-t3)# show configuration`	Displays the contents of uncommitted configuration.
Step 13	**root** **Example:** `RP/0/RSP0/CPU0:router(config-t3)# root`	Exits to global configuration mode.
Step 14	**interface serial** *interface-path-id* **Example:** `RP/0/RSP0/CPU0:router(config)# interface serial 0/1/1/0/0/0:0`	Specifies the complete interface number with the *rack/slot/module/port/T3Num/T1num:instance* notation.
Step 15	**encapsulation frame-relay** | **hdlc** | **ppp** **Example:** `RP/0/RSP0/CPU0:router(config-if)# encapsulation frame-relay | hdlc | ppp`	Specifies the encapsulation type with the one of the following keywords: • **frame-relay**—Frame Relay network protocol • **hdlc**—High-level Data Link Control (HDLC) synchronous protocol • **ppp**—Point-to-Point Protocol
Step 16	**ipv4** *ip-address mask* **Example:**	Assigns an IP address and subnet mask to the interface.

	Command or Action	Purpose
	`RP/0/RSP0/CPU0:router(config-if)# ip address 10.10.10.10 255.255.255.255`	
Step 17	**no shutdown** **Example:** `RP/0/RSP0/CPU0:router(config-if)# no shutdown`	Removes the shutdown configuration. **Note** • Removal of the shutdown configuration eliminates the forced administrative down on the interface, enabling it to move to an up or down state (assuming that the parent SONET layer is not configured administratively down).

Step 18	**end** or **commit**
	Example:
	`RP/0/RSP0/CPU0:router(config-sonet)# end`
	or
	`RP/0/RSP0/CPU0:router(config-sonet)# commit`
		Saves configuration changes.
		• When you issue the **end** command, the system prompts you to commit changes:
		`Uncommitted changes found, commit them before exiting(yes/no/cancel)? [cancel]:`
		• Entering **yes** saves configuration changes to the running configuration file, exits the configuration session, and returns the router to EXEC mode.
		• Entering **no** exits the configuration session and returns the router to EXEC mode without committing the configuration changes.
		• Entering **cancel** leaves the router in the current configuration session without exiting or committing the configuration changes.
		• Use the **commit** command to save the configuration changes to the running configuration file and remain within the configuration session.

Step 19	**show controllers sonet** *interface-path-id* **Example:** `RP/0/RSP0/CPU0:router# show controllers sonet 0/1/1/0`	Verifies the SONET controller configuration.

Configuring SDH AU-4

This task explains how to configure an SDH AU-4 stream into a TUG-3 channel mapped to E3s.

Before you begin

- You should know how to configure the SONET controller as specified in the How to Configure Channelized SONET/SDH section of the *Configuring Clear Channel SONET Controllers* module.

Restrictions

- Channelized SDH is supported on the following SPAs:
  - Cisco 1-Port Channelized OC-48/STM-16 SPA
  - Cisco 1-Port Channelized OC-3/STM-1 SPA
  - Cisco 2-Port Channelized OC-12/DS0 SPA
- In this release, AU-4 paths can only be channelized into TUG-3s.
- The 1-Port Channelized OC-48/STM-16 SPA does not support T1 or E1 channelization.

SUMMARY STEPS

1. **configure**
2. **controller sonet** *interface-path-id*
3. **clock source** {**internal** | **line**}
4. **framing sdh**
5. **au** *number*
6. **mode tug3**
7. **width** *number*
8. **tug3** *number*
9. **mode** *mode*
10. **root**
11. **controller** *name instance*
12. **mode** *mode*
13. **root**
14. **controller** *name instance*
15. **channel-group** *number*
16. **timeslots** *num1:num2:num3:num4*
17. or
18. **timeslots** *range1-range2*
19. **show configuration**
20. **root**
21. **interface serial** *interface-path-id*
22. **encapsulation** {**frame-relay** | **hdlc** | **ppp**}
23. **ipv4** *ip-address mask*
24. **no shutdown**
25. **end** or **commit**
26. **show controllers sonet** *interface-path-id*

DETAILED STEPS

	Command or Action	Purpose
Step 1	**configure** **Example:** `RP/0/0/CPU0:router# configure`	Enters global configuration mode.
Step 2	**controller sonet** *interface-path-id* **Example:** `RP/0/0/CPU0:router(config)# controller sonet 0/1/1/0`	Enters SONET controller configuration submode and specifies the SONET controller name and *interface-path-id* with the *rack/slot/module/port* notation.
Step 3	**clock source** {**internal** | **line**} **Example:** `RP/0/0/CPU0:router(config-sonet)# clock source internal`	Configures the SONET port transmit clock source, where the **internal** keyword sets the internal clock and the **line** keyword sets the clock recovered from the line. • Use the **line** keyword whenever clocking is derived from the network. Use the **internal** keyword when two routers are connected back to back or over fiber for which no clocking is available. • **line** is the default keyword. **Note** • Internal clocking is required for SRP interfaces.
Step 4	**framing sdh** **Example:** `RP/0/0/CPU0:router(config-sonet)# framing sdh`	Configures the controller for Synchronous Digital Hierarchy (SDH) framing. SONET framing (**sonet**) is the default.
Step 5	**au** *number* **Example:** `RP/0/RSP0/CPU0:router(config-sonet)# au 1`	Specifies the administrative unit (AU) group and enters AU path configuration mode. For AU-4, the valid range is: • 1 to 16—1-Port Channelized OC-48/DS3 SPA • 1 to 3—1-Port Channelized OC-3/STM-1 SPA • 1 to 4—2-Port Channelized OC-12c/DS0 SPA **Note** • The **au** command does not specify the AU type. It specifies the number of the AU group for the AU type that you want to configure. The range for the AU command varies based on whether you are configuring AU-3 or AU-4.

	Command or Action	Purpose
Step 6	**mode tug3** **Example:** `RP/0/0/CPU0:router(config-auPath)# mode tug3`	Sets the mode of interface at the AU level. Currently only TUG3 is supported.
Step 7	**width** *number* **Example:** `RP/0/0/CPU0:router(config-auPath)# width 3`	Configures the number of the AU streams.
Step 8	**tug3** *number* **Example:** `RP/0/0/CPU0:router(config-auPath)#tug3 1`	Specifies the Tributary Unit Group (TUG) *number* and enters the config-tug3Path mode. The range is 1 to 3.
Step 9	**mode** *mode* **Example:** `RP/0/0/CPU0:router(config-tug3Path)# mode e3`	Sets the mode of interface at the tug3 level. The modes are: • **c11**—TUG-3 path carrying TU-11 • **c11-t1**—TUG-3 path carrying TU-11 to T1 • **c12**—TUG-3 path carrying TU-12 • **c12-e1**—TUG-3 path carrying TU-12 to E1 • **e3**—TUG-3 path carrying E3 • **t3**—TUG-3 path carrying T3 **Note** • The 1-Port Channelized OC-48/STM-16 SPA only supports the **e3** and **t3** options.
Step 10	**root** **Example:** `RP/0/0/CPU0:router(config-tug3Path)# root`	Exits to global configuration mode.
Step 11	**controller** *name instance* **Example:** `RP/0/0/CPU0:router(config)# controller e3 0/1/1/0/0/0`	Enters controller configuration submode and specifies the controller name and instance identifier with the *rack/slot/module/port/name/instance* notation. The controller names are: • **e3**—TUG3 path carrying E3 • **t3**—TUG3 path carrying T3 • **e1**—channelized E1 port

	Command or Action	Purpose
		Note • In this step, you can create an E3 or T3 controller and add T1 channels under the T3 controller as shown inStep 14, or you can create a channelized E1 port at this point. • E1 is not supported on the 1-Port Channelized OC-48/STM-16 SPA.
Step 12	**mode** *mode* **Example:** `RP/0/0/CPU0:router(config-e3)#mode e1`	Sets the mode of interface. The modes are: • **e1**—Channelized into 21 E1s • **serial**—Clear Channel carrying HDLC-like payload • **t1**—Channelized into 28 T1s **Note** • T1 and E1 are not supported on the 1-Port Channelized OC-48/STM-16 SPA.
Step 13	**root** **Example:** `RP/0/0/CPU0:router(config-e3)# root`	Exits to global configuration mode.
Step 14	**controller** *name instance* **Example:** `RP/0/0/CPU0:router(config)# controller E1 0/1/1/0/0/0/0/0`	Enters controller configuration submode and specifies the controller name and instance identifier with the *rack/slot/module/port/name/instance1/instance2* notation. The controller names are: • serial—Clear Channel carrying HDLC-like payload. • t1—Channelized into 24 T1s.
Step 15	**channel-group** *number* **Example:** `RP/0/0/CPU0:router(config-e1)# channel-group 0`	Sets the channel-group number to which time slots are assigned. • For t1, the range is from 1 to 24. • For e1, the range is from 1 to 32.
Step 16	**timeslots** *num1:num2:num3:num4*	
Step 17	or	
Step 18	**timeslots** *range1-range2* **Example:** `RP/0/0/CPU0:router(config-e1-channel_group)# timeslots 1:3:7:9`	Specifies time slots for the interface by number with the *num1:num2:num3:num4* notation, or by range with the *range1-range2* notation.

	Command or Action	Purpose
	`RP/0/0/CPU0:router(config-e1-channel_group)# timeslots 1-12`	
Step 19	**show configuration** **Example:** `RP/0/0/CPU0:router(config-e1-channel_group)# show configuration`	Displays the contents of uncommitted configuration.
Step 20	**root** **Example:** `RP/0/0/CPU0:router(config-e1-channel_group)# root`	Exits to global configuration mode.
Step 21	**interface serial** *interface-path-id* **Example:** `RP/0/0/CPU0:router(config)# interface serial 0/1/1/0/0/0:0`	Specifies the complete interface number with the *rack/slot/module/port/T3Num/T1num:instance* notation.
Step 22	**encapsulation** {**frame-relay** | **hdlc** | **ppp**} **Example:** `Router(config-if)# encapsulation frame-relay | hdlc | ppp`	Specifies the encapsulation type with the one of the following keywords: • **frame-relay**—Frame Relay network protocol • **hdlc**—High-level Data Link Control (HDLC) synchronous protocol • **ppp**—Point-to-Point Protocol
Step 23	**ipv4** *ip-address mask* **Example:** `Router(config-if)# ip address 10.10.10.10 255.255.255.255`	Assigns an IP address and subnet mask to the interface.
Step 24	**no shutdown** **Example:** `RP/0/0/CPU0:router (config-if)# no shutdown`	Removes the shutdown configuration. **Note** • Removal of the shutdown configuration eliminates the forced administrative down on the interface, enabling it to move to an up or down state (assuming that the parent SONET layer is not configured administratively down).
Step 25	**end** or **commit** **Example:** `RP/0/0/CPU0:router(config-sonet)# end`	Saves configuration changes. • When you issue the **end** command, the system prompts you to commit changes:

	Command or Action	Purpose
	or `RP/0/0/CPU0:router(config-sonet)# commit`	`Uncommitted changes found, commit them before exiting(yes/no/cancel)? [cancel]:` • Entering **yes** saves configuration changes to the running configuration file, exits the configuration session, and returns the router to EXEC mode. • Entering **no** exits the configuration session and returns the router to EXEC mode without committing the configuration changes. • Entering **cancel** leaves the router in the current configuration session without exiting or committing the configuration changes. • Use the **commit** command to save the configuration changes to the running configuration file and remain within the configuration session.
Step 26	**show controllers sonet** *interface-path-id* **Example:** `RP/0/0/CPU0:router# show controllers sonet 0/1/1/0`	Verifies the SONET controller configuration.

Configuration Examples for Channelized SONET

This section contains the following examples:

Channelized SONET Examples

Channelized SONET T3 to T1 Configuration: Example

This example shows SONET T3 to T1 configuration.

```
configure
controller sonet 0/1/1/0
  clock source internal
  framing sonet
  sts 1
  mode t3
  width 3
  root
 controller t3 0/1/1/0/0
  mode t1
framing auto-detect
  root
 controller t1 0/1/1/0/0/0
  framing esf
```

```
  channel-group 0
   timeslots 1:3:7:9
 show configuration
  root
 interface serial 0/1/1/0/0/0:0
 encapsulation hdlc
 ip address 10.10.10.10 255.255.255.255
 no shutdown
  commit
show controllers sonet 0/1/1/0
```

Channelized SONET in VT1.5 Mode and T1 Channelization to NxDS0

Note This example is not supported on the 1-Port Channelized OC-48/STM-16 SPA.

This example shows how to configure SONET channelized to NxDS0s through SONET VT1.5 mode:

```
configure
controller sonet 0/1/1/0
  clock source internal
  framing sonet
  sts 1
  mode vt15-t1
  root
controller t1 0/1/1/0/0/0
 channel-group 0 timeslots 1
  channel-group 1 timeslots 2-3
  commit
```

Channelized Packet over SONET Configuration: Example

This example shows Channelized Packet over SONET configuration.

```
configure
 controller sonet 0/1/1/0
  clock source internal
  framing sonet
  sts 1
  mode pos scramble
  width 3
  root
 interface POS 0/1/1/0
  encapsulation hdlc
  pos crc 32
  mtu 4474
  no shutdown
 commit
show interfaces pos 0/1/1/0
```

SONET Clear Channel T3 Configuration: Example

This example shows SONET clear channel configuration for T3:

```
configure
 controller sonet 0/1/1/0
```

```
  clock source internal
  framing sonet
  sts 1
  mode t3
  root
 controller t3 0/1/1/0/0
  mode serial
  root
 interface serial 0/1/1/0/0/0:0
 encapsulation ppp
 ip address 10.10.10.10 255.255.255.255
 no shutdown
  commit
show controllers sonet 0/1/1/0
```

Channelized SONET APS Multirouter Configuration: Example

This example shows SONET APS multirouter configuration.

```
 aps group 1
  channel 0 local SONET 0/0/0/1
  channel 1 remote 172.18.69.123

  signalling sonet

  commit
show aps
show aps group 3
```

Channelized SDH Examples

Channelized SDH AU-3 Configuration: Examples

This section includes the following configuration examples

Channelized SDH AU-3 to VC-3 and Clear Channel T3/E3: Examples

This example shows how to configure SDH AU-3 to VC-3 and clear channel T3:

```
configure
 controller sonet 0/1/1/0
  clock source internal
  framing sdh
  au 1
  width 1
  mode t3
  root
 controller t3 0/1/1/0/1
  mode serial
  commit
```

This example shows how to configure SDH AU-3 to VC-3 and clear channel E3:

```
configure
 controller sonet 0/1/1/0
  clock source internal
```

```
  framing sdh
  au 1
  width 1
  mode e3
  root
 controller e3 0/1/1/0/1
  mode serial
  commit
```

Channelized SDH AU-3 to TUG-2, VC-11, T1 and NxDS0s: Example

Note This example is not supported on the 1-Port Channelized OC-48/STM-16 SPA.

The following example shows how to configure SDH AU-3 to TUG-2, VC-11 and channelized T1 to NxDS0s:

```
configure
 controller sonet 0/1/1/0
  clock source internal
  framing sdh
  au 1
  mode c11-t1
  width 1
  root
 controller T1 0/1/1/0/0/1/1
  channel-group 0
   timeslots 1-12
   show configuration
  root
 interface serial 0/1/1/0/1/1:0
 encapsulation ppp
 ip address 10.10.10.10 255.255.255.255
 no shutdown
 commit
show controllers sonet 0/1/1/0
```

Channelized SDH AU-3 to TUG-2, VC-12, E1 and NxDS0s: Example

Note This example is not supported on the 1-Port Channelized OC-48/STM-16 SPA.

The following example shows how to configure SDH AU-3 to TUG-2, VC-12 and channelized E1 to NxDS0s:

```
configure
 controller sonet 0/1/1/0
  clock source internal
  framing sdh
  au 1
  mode c12-e1
  width 1
  root
 controller e1 0/1/1/0/0/1/1
  channel-group 0
   timeslots 1-12
   show configuration
```

```
  root
 interface serial 0/1/1/0/1/1:0
 encapsulation ppp
 ip address 10.10.10.10 255.255.255.255
 no shutdown
 commit
show controllers sonet 0/1/1/0
```

Channelized SDH AU-4 Configuration: Examples

This section includes the following configuration examples

Channelized SDH AU-4 to TUG-3 and Clear Channel T3/E3: Examples

This example shows SDH AU-4 channelization to TUG-3 and clear channel T3:

```
configure
 controller sonet 0/4/0/0
  framing sdh
  au 1
  width 3
  mode tug3
  tug3 1
   mode t3
   root
 controller t3 0/4/0/0/1/1
  mode serial
  commit
```

This example shows SDH AU-4 channelization to TUG-3 and clear channel E3:

```
configure
 controller sonet 0/4/0/0
  framing sdh
  au 1
  width 3
  mode tug3
  tug3 1
   mode e3
   root
 controller e3 0/4/0/0/1/1
  mode serial
  commit
```

Channelized SDH AU-4 to TUG-3, TUG-2, and T1/E1 and NxDS0: Examples

Note Channelization to T1/E1 and NxDS0s is not supported on the 1-Port Channelized OC-48/STM-16 SPA.

The following example shows SDH AU-4 configuration with unframed E1 controllers and serial interfaces:

```
configure
 controller sonet 0/1/2/0
  framing sdh
  au 1
  width 3
  mode tug3
```

```
  tug3 1
   mode c12-e1
!
  tug3 2
   mode c12-e1
!
  tug3 3
   mode c12-e1
!
controller E1 0/1/2/0/1/1/1/1
framing unframed
!
controller E1 0/1/2/0/1/1/1/2
framing unframed
!
controller E1 0/1/2/0/1/1/1/3
framing unframed
!
interface Serial0/1/2/0/1/1/1/1:0
encapsulation ppp
multilink
  group 1
!
interface Serial0/1/2/0/1/1/1/2:0
encapsulation ppp
multilink
  group 1
!
!
interface Serial0/1/2/0/1/1/1/3:0
encapsulation ppp
multilink
  group 1
!
```

The following example shows SDH AU-4 configuration with E1 controller channel groups and serial interfaces:

```
configure
 controller SONET0/3/2/0
   framing sdh
   au 1
   width 3
   mode tug3
   tug3 1
   mode c12-e1
!
   tug3 2
   mode c12-e1
!
   tug3 3
   mode c12-e1
!
controller E1 0/3/2/0/1/1/1/1
 framing crc4
 channel-group 0
  timeslots 1-4
!
controller E1 0/3/2/0/1/1/3/1
 framing crc4
 channel-group 0
  timeslots 1-31
!
controller E1 0/3/2/0/1/1/1/2
 framing crc4
```

```
 channel-group 0
  timeslots 1-31
!
controller E1 0/3/2/0/1/2/7/3
 framing crc4
 channel-group 0
  timeslots 1-5
!
 channel-group 1
  timeslots 6-31
!
interface Serial0/3/2/0/1/1/1/1:0
 encapsulation frame-relay IETF
 frame-relay lmi-type ansi
 frame-relay intf-type dce
!
interface Serial0/3/2/0/1/1/1/1:0.1 point-to-point
 ipv4 address 192.168.200.2 255.255.255.252
 ipv4 verify unicast source reachable-via rx
 pvc 100
  encap ietf
!
interface Serial0/3/2/0/1/1/3/1:0
 encapsulation ppp
 multilink
  group 1
!
interface Serial0/3/2/0/1/1/1/2:0
 encapsulation ppp
 multilink
  group 1
```