CHAPTER 1

Understanding Interface Numbering and Cisco IOS Software Basics

This chapter provides an overview of interface numbering in the Cisco IAD2430 series integrated access devices (IADs). It also describes how to use the Cisco IOS software commands.

This chapter presents the following major topics:

Identifying Cisco IAD2430 Models

Figure 1-1 shows the front panel of the Cisco IAD2430 series IAD. Figure 1-2 shows the front panel of the Cisco IAD2435 IAD.

Cisco IAD2430-24FXS IAD

The Cisco IAD2430-24FXS provides 24 analog foreign exchange station (FXS) ports with two 10/100BASE-T ports. The chassis has the following interfaces:

- RJ-21 analog voice interface
- Two 10/100BASE-T ports
- External flash memory
- AC and DC power inputs

Figure 1-1 Cisco IAD2430-24FXS Chassis—Front Panel

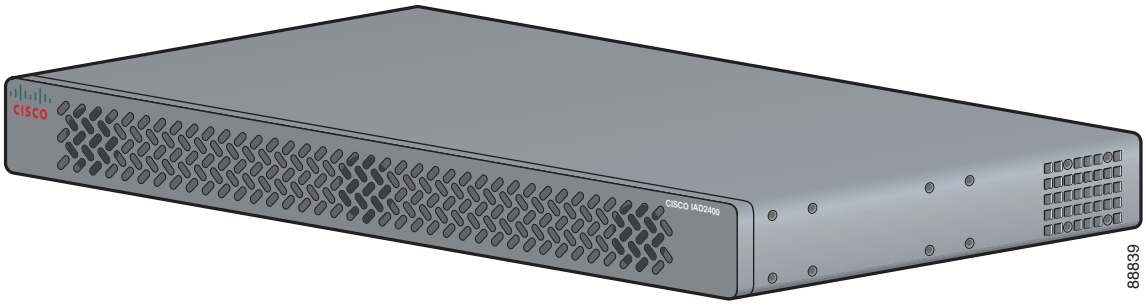

Figure 1-2 Cisco IAD2435-8FXS Chassis—Front Panel

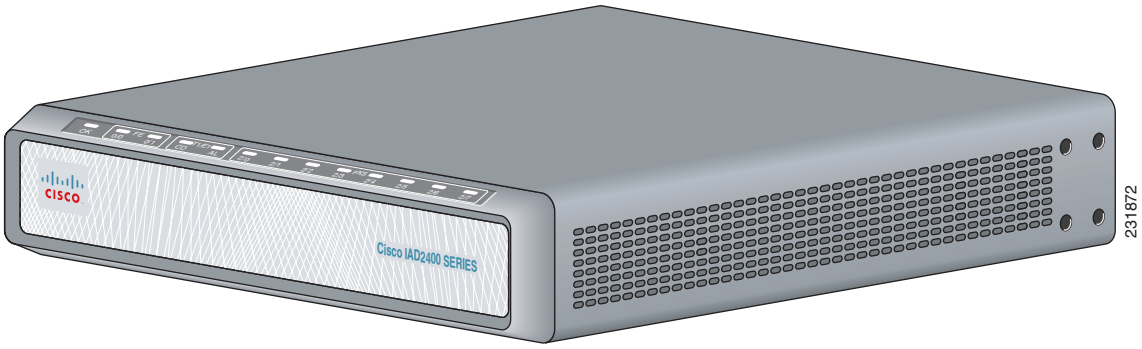

Cisco IAD2431-8FXS IAD

The Cisco IAD2431-8FXS provides eight analog FXS ports, two 10/100BASE-T ports, and one T1/E1 WAN port. The chassis has the following interfaces (see Figure 1-3):

- RJ-21 analog voice interface
- One T1/E1 port
- One 10/100BASE-T port
- One WIC/VIC slot
- External flash memory
- AC and DC power adapter

Figure 1-3 Cisco IAD2431-8FXS Chassis—Back Panel

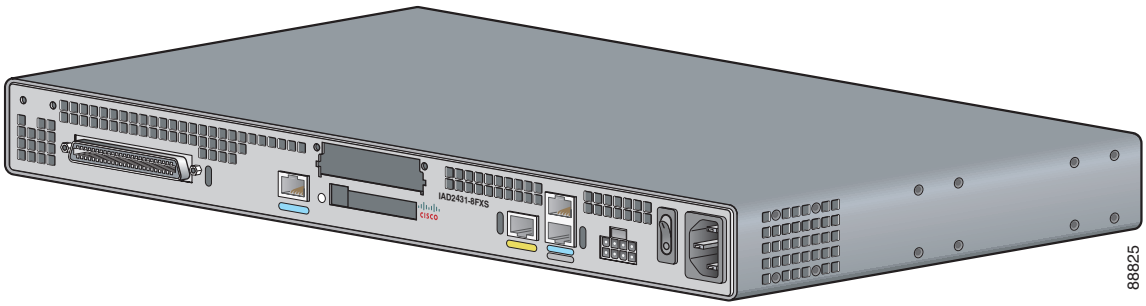

Cisco IAD2431-16FXS IAD

The Cisco IAD2431-16FXS provides 16 analog FXS ports with two 10/100BASE-T ports and one T1/E1 WAN ports. The chassis has the following interfaces (see Figure 1-4):

- RJ-21 analog voice interface
- One T1/E1 port
- Two 10/100BASE-T ports
- One WIC/VIC slot
- External flash memory
- AC and DC power inputs

Figure 1-4 Cisco IAD2431-16FXS Chassis—Back Panel

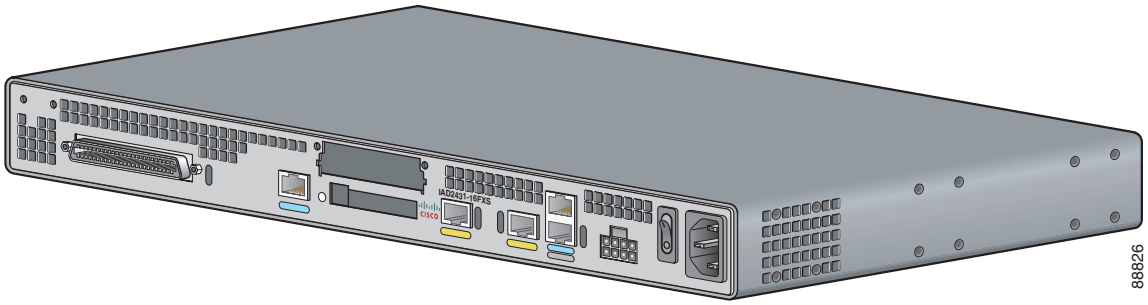

Cisco IAD2431-1T1E1 IAD

The Cisco IAD2431-1T1E1 provides one T1/E1 connection to a PBX, one T1/E1 WAN port, and two 10/100BASE-T ports. The chassis has the following interfaces (see Figure 1-5):

- One T1/E1 ports
- Two 10/100BASE-T ports
- One WIC/VIC slot
- External flash memory
- AC and DC power inputs

Figure 1-5 Cisco IAD2431-1T1E1 Chassis—Back Panel

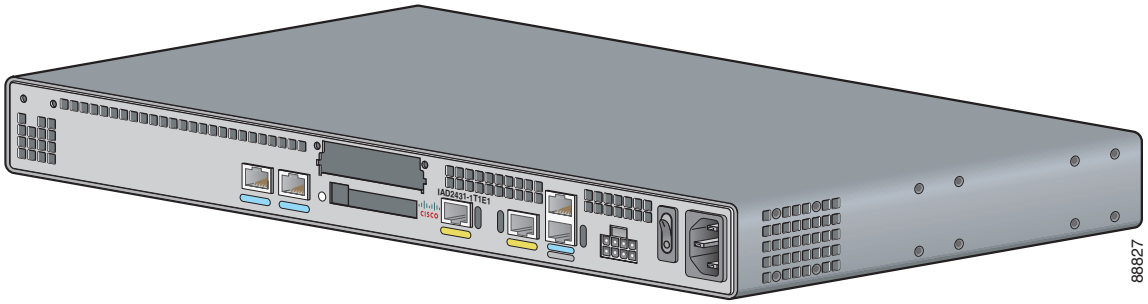

Cisco IAD2432-24FXS IAD

The Cisco IAD2432-24FXS provides 24 analog FXS ports, two 10/100BASE-T ports, and two T1/E1 WAN ports. The chassis has the following interfaces (see Figure 1-6):

- RJ-21 analog voice interface
- Two T1/E1 ports
- Two 10/100BASE-T ports
- One WIC/VIC slot
- External flash memory
- AC and DC power inputs

Figure 1-6 Cisco IAD2432-24FXS Chassis—Back Panel

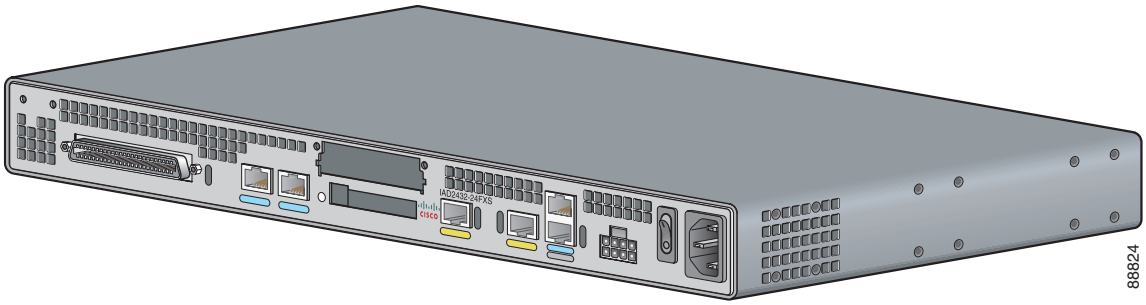

Cisco IAD2435-8FXS IAD

The Cisco IAD2435-8FXS provides eight analog FXS ports, two Fast Ethernet ports, and one T1/E1 WAN port. The chassis has the following interfaces (see Figure 1-7):

- RJ-21 analog voice interface
- One T1/E1 port
- Two Fast Ethernet ports
- AC and DC power inputs

Figure 1-7 Cisco IAD2435-8FXS Chassis—Back Panel

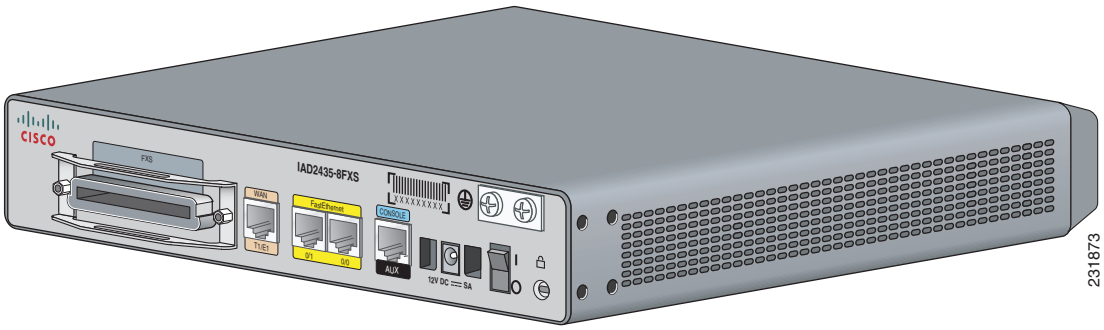

Port Numbering Conventions

Figure 1-8 shows the port numbers of the Cisco IAD2432-24FXS IAD. The figure is provided to show an example of the port numbering conventions.

Figure 1-8 Analog FXS User Interfaces with Metro Ethernet Interface

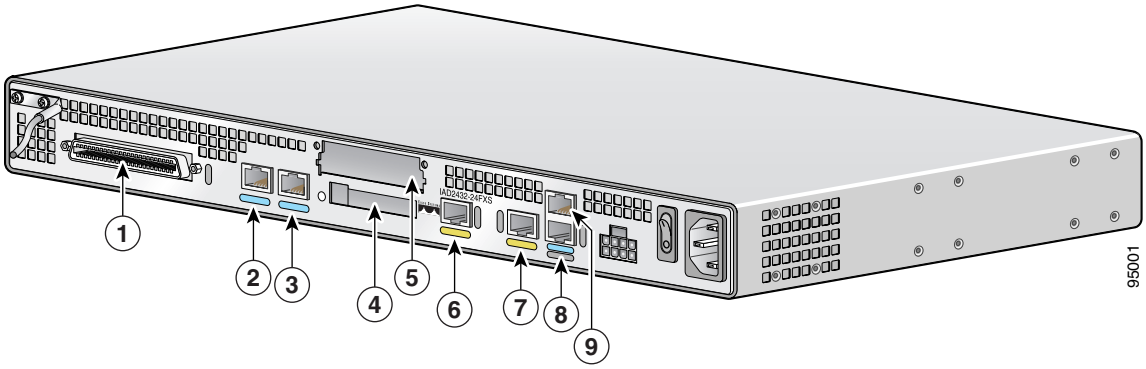

1	RJ-21 connector	**4**	Flash memory port	**7**	Fast Ethernet port 0
2	T1/E1 port 0	**5**	WIC/VIC slot	**8**	AUX port
3	T1/E1 port 1	**6**	Fast Ethernet port 1	**9**	Console port

Port numbering conventions for all the Cisco IAD2430 series IADs are as follows:

- Foreign Exchange Station (FXS) voice port numbering begins at 2/0 and extends to 2/7, 2/15, or 2/23, depending on the number of voice ports.
- T1/E1 ports are numbered T1 or E1 1/0 and T1 or E1 1/1, from right to left.
- The external flash memory port is numbered CF 0.
- The slot for WAN interface cards (WICs) and voice interface cards (VICs) is numbered slot 0. WIC and VIC interfaces are numbered by interface with this slot number and an interface number, beginning with 0, and running from right to left.
- 10/100BASE-T Fast Ethernet ports are numbered Fast Ethernet 0/0 and Fast Ethernet 0/1, from right to left.

Understanding Cisco IOS Software Basics

This section describes what you need to know about the Cisco IOS software before you configure the router by using the command-line interface (CLI). This chapter includes the following:

Understanding these concepts will save time as you begin to use the CLI. If you have never used Cisco IOS software or if you need a refresher, take a few minutes to read this chapter before you proceed to the next chapter.

Note For a comprehensive view of Cisco IOS configuration fundamentals, see the *Cisco IOS Configuration Fundamentals Configuration Guide, Release 12.4* document.

If you are already familiar with Cisco IOS software, proceed to Chapter 2, "Using the setup Command Facility."

Software Images

Images **c2430-is-mz** and **c2430-ik9o3s-mz** can be loaded on the following platforms which have T1E1 and VWIC ports:

- IAD2431-8FXS
- IAD2431-16FXS
- IAD2431-1T1E1
- IAD2432-24FXS

Images **c2430-i6s-mz** and **c2430-i6k9o3s-mz** should be loaded on the IAD2430-24FXS, which does not have a VWIC slot.

Getting Help

Use the question mark (?) and arrow keys to help you enter commands:

- For a list of available commands, enter a question mark:

  ```
  Router> ?
  ```

- To complete a command, enter a few known characters followed by a question mark (with no space):

  ```
  Router> s?
  ```

- For a list of command variables, enter the command followed by a space and a question mark:

  ```
  Router> show ?
  ```

- To redisplay a command you previously entered, press the Up arrow key. You can continue to press the Up arrow key for more commands.

Command Modes

The Cisco IOS user interface involves different modes. Each command mode permits you to configure different components on your router. The commands available at any given time depend on which mode you are currently in. Entering a question mark (**?**) at the prompt displays a list of commands available for each command mode. Table 1-1 lists the most common command modes.

Table 1-1 Common Command Modes

Command Mode	Access Method	Router Prompt Displayed	Exit Method
User EXEC	Log in.	`Router>`	Use the **logout** command.
Privileged EXEC	From user EXEC mode, enter the **enable** command.	`Router#`	To exit to user EXEC mode, use the **disable**, **exit**, or **logout** command.
Global configuration	From the privileged EXEC mode, enter the **configure terminal** command.	`Router (config)#`	To exit to privileged EXEC mode, use the **exit** or **end** command, or press **Ctrl-Z**.
Interface configuration	From the global configuration mode, enter the **interface** *type number* command, such as **interface serial 0/0**. **Note** Cisco IAD2435 IAD does not support **interface serial 0/0**.	`Router (config-if)#`	To exit to global configuration mode, use the **exit** command. To exit directly to privileged EXEC mode, press **Ctrl-Z**.

Timesaver Each command mode restricts you to a subset of commands. If you are having trouble entering a command, check the prompt, and enter the question mark (**?**) for a list of available commands. You might be in the wrong command mode or using the wrong syntax.

In the following example, notice how the prompt changes after each command to indicate a new command mode:

```
Router> enable
Password: <enable password>
Router# configure terminal
Router(config)# interface serial 0/0
Router(config-if)# line 0
Router(config-line)# controller T1/E1 slot/port <---See second Note below
Router(config-controller)# exit
Router(config)# exit
Router#
%SYS-5-CONFIG_I: Configured from console by console
```

The last message is normal and does not indicate an error. Press **Enter** to get the `Router#` prompt.

Note You can press **Ctrl-Z** in any mode to immediately return to enable mode (`Router#`), instead of entering **exit**, which returns you to the previous mode.

Note In the Cisco IAD2430 series IADs, the controller port syntax is *x/y*, where

slot can be 0 (where 0 is the T1/E1 controller on a VWIC) or 1 (the onboard T1/E1), and

port can be 0 (the first port) or 1 (the second port).

See the "Port Numbering Conventions" section on page 1-5.

Undoing a Command or Feature

If you want to undo a command you entered or disable a feature, enter the keyword **no** before most commands; for example, **no ip routing**.

Saving Configuration Changes

You need to enter the **copy running-config startup-config** command to save your configuration changes to NVRAM, so the changes are not lost if there is a system reload or power outage. For example:

```
Router# copy running-config startup-config
Building configuration...
```

It might take a minute or two to save the configuration to NVRAM. After the configuration has been saved, the following appears:

```
[OK]
Router#
```

Upgrading to a New Cisco IOS Release

To install or upgrade to a new Cisco IOS release, see Appendix B, "Formatting the Flash Memory."

Note To simplify network operations and management of Cisco IOS software migration, see the *Basics of a Successful Cisco IOS Software Migration* document.

Table 1-2 Software Images Supported

Router	Software Image
IAD2431, IAD2432	IP PLUS - c2430-is-mz.124-15.T3.bin IP PLUS/IPSEC 64BIT/FW/VOICE - c2430-ik9o3s-mz.124-15.T3.bin
IAD2430	IP SUBSET/VOICE - c2430-i6s-mz.124-15.T3.bin IP SUBSET/IPSEC 64BIT/FW/VOICE - c2430-i6k9o3s-mz.124-15.T3.bin
IAD2435	Cisco IAD 2435 IP VOICE W/O CRYPTO-c2435-ipvoice-mz.124-22T.bin Cisco IAD 2435 ADVANCED IP SERVICES-c2435-advipservicesk9-mz.124-22T.bin

Cisco IAD2430 Series Deployment Scenarios

Figure 1-9 through Figure 1-9 on page 1-9 show some typical deployment scenarios for Cisco IAD2430 series IADs.

Figure 1-9 Analog FXS User Interface with Metro Ethernet Interface

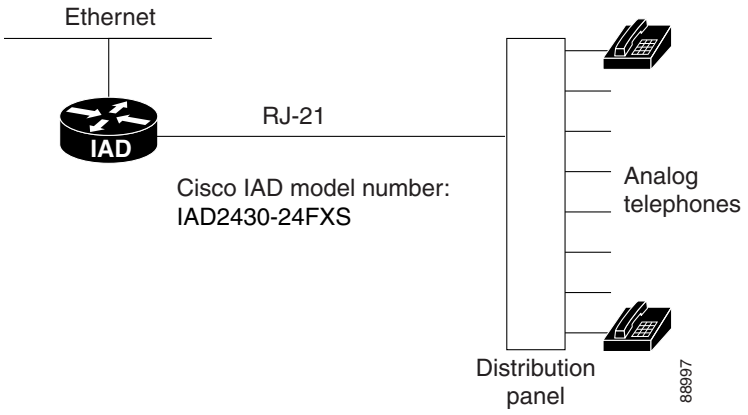

Figure 1-10 T1/E1 WAN Interface with Analog FXS User Interface

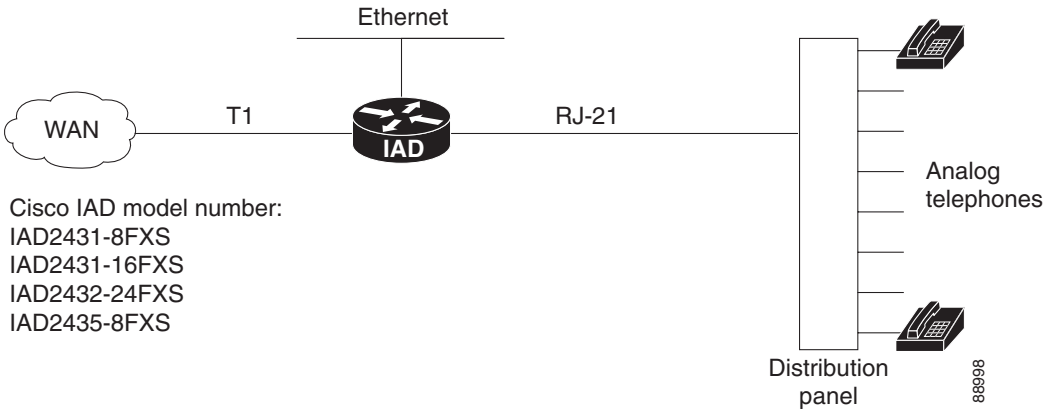

Figure 1-11 T1/E1 WAN Interface with Analog FXS and FXO User Interfaces

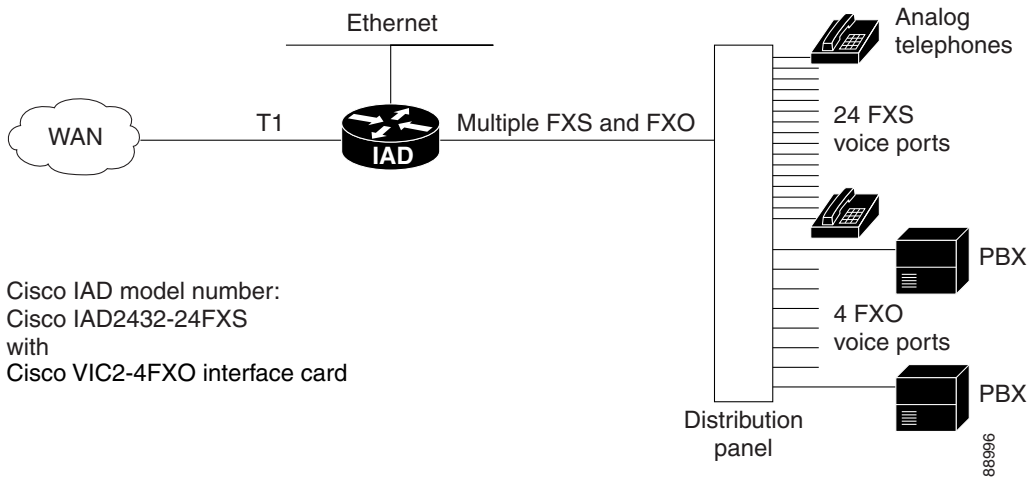

Figure 1-12 T1/E1 WAN Interface with T1 Interface to PBX User Interface

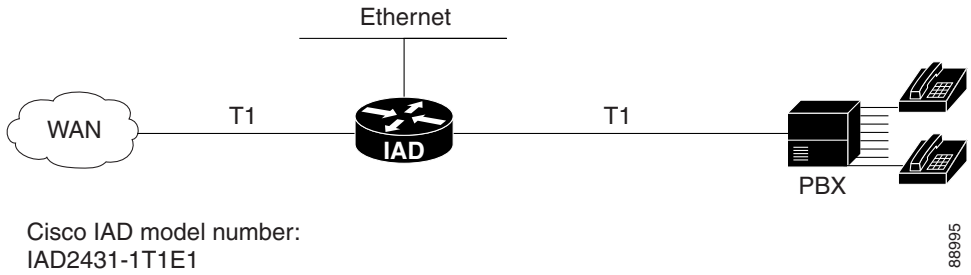

Where to Go Next

Now that you have learned some Cisco IOS software basics and seen some typical deployment scenarios, you can begin to configure the router by using the command-line interface (CLI).

Remember that:

- You can use the question mark (?) and arrow keys to help you enter commands.
- Each command mode restricts you to a set of commands. If you have difficulty entering a command, check the prompt and then enter the question mark (**?**) for a list of available commands. You might be in the wrong command mode or be using the wrong syntax.
- To disable a feature, generally enter the keyword **no** before the command; for example, **no ip routing**.
- You need to save your configuration changes to NVRAM so that the changes are not lost if there is a system reload or power outage.

Go to Chapter 2, "Using the setup Command Facility," to begin configuring the router.