

Cisco NCS 1014 Optical Applications Configuration Guide, IOS XR Releases

First Published: 2025-11-10

Americas Headquarters
Cisco Systems, Inc.
170 West Tasman Drive
San Jose, CA 95134-1706
USA
http://www.cisco.com
Tel: 408 526-4000
800 553-NETS (6387)
Fax: 408 527-0883

© 2026 Cisco Systems, Inc. All rights reserved.



CONTENTS

CHAPTER 1 **Internode Topology Discovery and Communication** 1

NCS 1014 link topology discovery 1

Configure OSPF on the nodes for automatic topology discovery 2

View the topology information 4

CHAPTER 2 **Span Loss** 7

Span loss 8

Configure span loss thresholds 9

View the span loss measurements 9

Verify span loss configurations 10

CHAPTER 3 **Channel APC** 11

Channel APC 11

How channel APC works 14

Enable channel APC 14

Disable channel APC 15

Pause channel APC 15

Resume channel APC 16

Set target PSD for channel APC 16

Configure input amplifier 17

View channel APC information 17

CHAPTER 4 **Amplifier APC** 21

Amplifier APC 21

How amplifier APC works 22

Enable Amplifier APC 23

Disable Amplifier APC 23
Pause Amplifier APC 24
Resume Amplifier APC 24
Configure fiber type 25
View amplifier APC information 25

CHAPTER 5 **Configure OTDR** 31
ONS-QSFP-OTDR pluggables 31
OTDR modes 33
OTDR negotiations 33
How OTDR negotiation works 34
Configure the OTDR scan parameters for auto and expert modes 35
OTDR scan parameters for auto and expert modes 35
Start the OTDR scan manually 37
View the OTDR measurements 38
Stop the OTDR scan 38
Automatic bidirectional OTDR scan 39
How the bidirectional autoscan works 40
Enable automatic OTDR scan 41
Verify autoscan status 41
OTDR scan status 42
OTDR baseline 44
Save a new OTDR baseline 45
View OTDR baseline 46

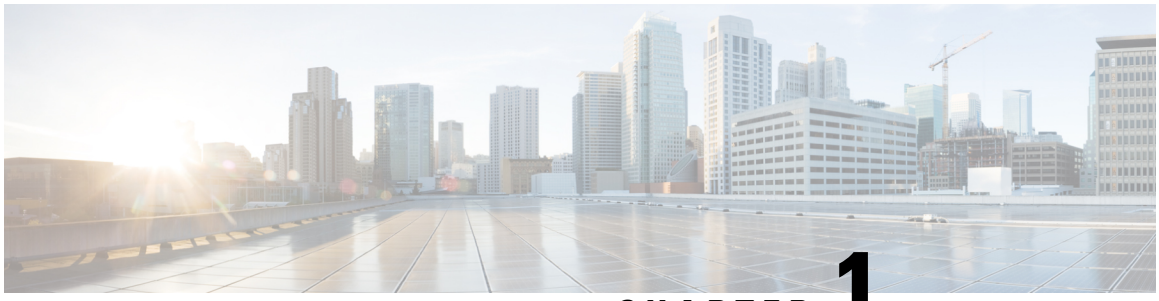

CHAPTER 1

Internode Topology Discovery and Communication

Table 1: Feature History

Feature Name	Release Information	Feature Description
Automatic topology discovery	Cisco IOS XR Release 25.1.1	NCS 1014 now supports topology discovery using the OSC links created through the EDFA2 card. To establish the OSC link between two nodes, you need to configure the OSC pluggable to be operational and the OSPFv2 protocol on both the near-end and far-end nodes. By connecting the NCS 1014 to OSPF networks, the NCS 1014 network information is automatically communicated across multiple nodes.

- **NCS 1014 link topology discovery** , on page 1
- Configure OSPF on the nodes for automatic topology discovery , on page 2
- View the topology information, on page 4

NCS 1014 link topology discovery

Automatic network topology discovery

Network topology discovery is automatic when you use an OSC channel created through the EDFA2 card. By connecting the NCS 1014 to Open Shortest Path First (OSPF) networks, NCS 1014 network information is automatically communicated across multiple LANs and WANs. In a network utilizing an OSC channel, all nodes can communicate with each other through this channel.

Understanding OSPF

OSPF is a link-state Internet routing protocol. Link-state protocols monitor their links with adjacent routers and assess the status of their connections to neighbors. These protocols advertise their directly connected networks and active links. Each link-state router compiles these link-state advertisements to form a topology of the entire network or area. From this database, the router calculates a routing table by constructing a shortest path tree. Routes are recalculated when topology changes occur. NCS 1014 supports only OSPFv2.

OSPF protocol in NCS networks

NCS 1014 uses the OSPFv2 protocol within internal NCS networks for node discovery, circuit routing, and node management. Enabling OSPFv2 on the NCS allows the NCS topology to be communicated to OSPF routers on a LAN. This eliminates the need to manually input static routes for NCS subnetworks. OSPF divides networks into smaller regions, called areas, each with a unique ID number, known as the area ID. Every OSPF network includes one backbone area called "area 0," and all other OSPF areas must connect to area 0.

Configure OSPF on the nodes for automatic topology discovery

Use this task to configure OSPFv2 on the near end and far end nodes of the topology shown in this image.

Figure 1: Sample two node topology

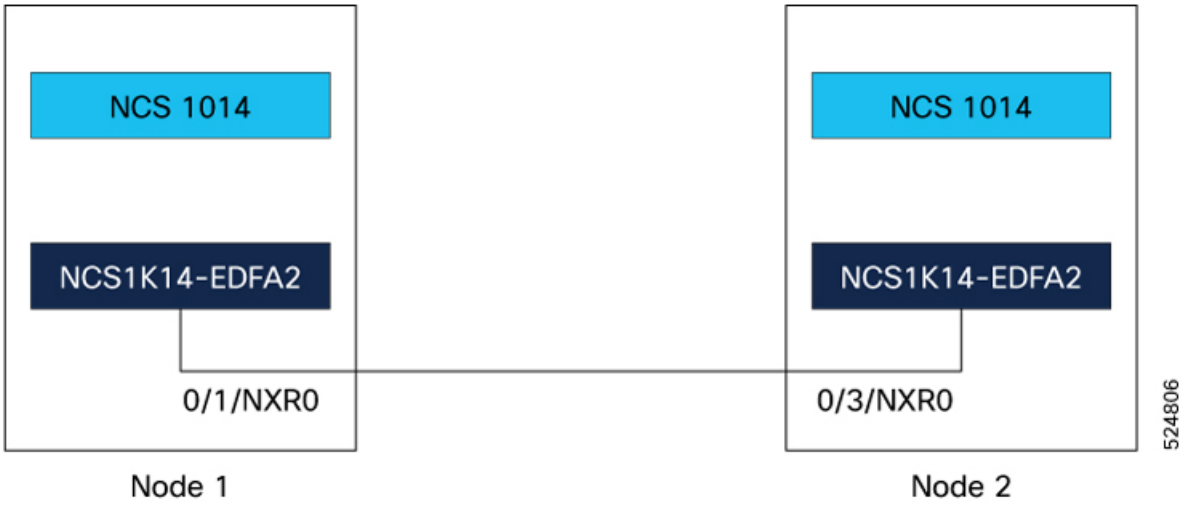

OSPFv2 supports only IPv4 addressing.

Procedure

Step 1 Configure the interfaces.

a) Use the **interface Loopback** command to configure the loopback interface IPv4 address, which is the primary loopback address that you want to reuse for all areas.

Example:

Node 1:

```
RP/0/CPU0:ios(config)# interface Loopback 0
RP/0/CPU0:ios(config-if)# ipv4 address 10.10.10.10 255.255.255.255
RP/0/CPU0:ios(config-if)# no shut
RP/0/CPU0:ios(config-if)# exit
```

Node 2:

```
RP/0/CPU0:ios(config)# interface Loopback 0
RP/0/CPU0:ios(config-if)# ipv4 address 10.10.10.11 255.255.255.255
RP/0/CPU0:ios(config-if)# no shut
RP/0/CPU0:ios(config-if)# exit
```

b) Use the interface GigabitEthernet command to configure the Gigabit Ethernet interface for the OSC link.

Example:

Node 1:

```
RP/0/CPU0:ios(config)# interface GigabitEthernet 0/1/0/5
RP/0/CPU0:ios(config-if)# ipv4 point-to-point
RP/0/CPU0:ios(config-if)# ipv4 unnumbered Loopback0
RP/0/CPU0:ios(config-if)# no shut
RP/0/CPU0:ios(config-if)# exit
```

Node 2:

```
RP/0/CPU0:ios(config)# interface GigabitEthernet 0/3/0/5
RP/0/CPU0:ios(config-if)# ipv4 address 10.1.1.2 255.255.255.0
RP/0/CPU0:ios(config-if)# no shut
RP/0/CPU0:ios(config-if)# exit
```

Step 2 Configure the OSPF process:

a) Use the **router ospf** *process-name* to enable OSPF routing.
b) Use the **distribute link-state** keyword to distribute OSPF link-state data.
c) Use the **segment-routing mpls** keyword to enable MPLS-based segment routing for the OSPF process.

This step is optional.

d) Use the **network point-to-point** keyword to configure an interface OSPF network type to point-to-point.
e) Use the **area** keyword to configure an OSPF area.

Example:

Node 1 and 2:

```
RP/0/RP0/CPU0:ios(config)# router ospf 1
RP/0/RP0/CPU0:ios(config-ospf)#distribute link-state
RP/0/RP0/CPU0:ios(config-ospf)#segment-routing mpls
RP/0/RP0/CPU0:ios(config-ospf)#area 0
```

Step 3 Add the configured interfaces to the OSPF area.

Example:

Node 1:

```
RP/0/RP0/CPU0:ios(config-ospf-ar)# interface Loopback 0
RP/0/RP0/CPU0:ios(config-ospf-ar-if)# exit
RP/0/RP0/CPU0:ios(config-ospf-ar)# interface GigabitEthernet 0/1/0/5
```

Node 2:

```
RP/0/RP0/CPU0:ios(config-ospf-ar)# interface Loopback 0
RP/0/RP0/CPU0:ios(config-ospf-ar-if)# exit
RP/0/RP0/CPU0:ios(config-ospf-ar)# interface GigabitEthernet 0/3/0/5
```

Step 4 Exit the OSPF area configuration mode and commit your configuration.

Example:

Node 1 and 2:

```
RP/0/RP0/CPU0:ios(config-ospf-ar-if)# exit
RP/0/RP0/CPU0:ios(config-ospf-ar)# exit
RP/0/(config-ospf)# exit
RP/0/RP0/CPU0:ios(config)# commit
RP/0/RP0/CPU0:ios(config)# exit
```

View the topology information

Use this task to view the topology information.

Procedure

Step 1 Use the command **show olc internal** *slot id port id* **topo-link** to view the topology information.

Example:

```
RP/0/RP0/CPU0:ios# show olc internal slot 0 port 0 topo-link
                        Thu Feb 20 19:53:52.277 IST
                        Self RID: 172.16.0.1
                        Node Type: OLT
                        <OLT><172.16.0.1><0x6a> --- <OLT><192.168.0.1><0x69>
```

If no neighbors are discovered, an alarm will be triggered at the OSC port.

Example:

```
RP/0/RP0/CPU0:ios#show alarms brief system active
                        Thu Feb 20 19:54:31.266IST

------------------------------------------------------------------------------------
                        Active Alarms

------------------------------------------------------------------------------------
                        Location  Severity   Group       Set Time                  Description
                        0/1/NXR0  Minor      Software   02/20/2025 19:54:31 IST    Ots0/1/0/0 -
Neighbour not found

RP/0/RP0/CPU0:ios#show alarms brief system
                        Thu Feb 20 19:44:35.212 UTC

------------------------------------------------------------------------------------
                        Active Alarms
```

```
------------------------------------------------------------------------------
                        Location  Severity   Group       Set Time                  Description
                        0/3/NXR0  Minor      Software    02/20/2025 19:14:35 IST   Ots0/3/0/0 -
Neighbour not found
```

Step 2 Use the command ***show ip ospf neighbor*** to display OSPF neighbor information on a per-interface basis.

Example:

```
                        RP/0/RP0/CPU0:ios#show ip ospf neighbor
                        Thu Feb 20 19:53:53.324 IST

                        * Indicates MADJ interface
                        # Indicates Neighbor awaiting BFD session up

                        Neighbors for OSPF 1

                        Neighbor ID     Pri   State           Dead Time   Address         Interface
                        192.168.0.1     1     FULL/  -        00:00:30    192.168.0.1
GigabitEthernet0/0/0/5
                        Neighbor is up for 00:00:56

                        Total neighbor count: 1
```

Step 3 Use the **show ip interface brief** command to view a summary of the router interfaces.

Example:

```
                        RP/0/RP0/CPU0:ios#show ip interface  brief
                        Thu Feb 20 19:53:54.653 IST

                        Interface                      IP-Address      Status          Protocol
Vrf-Name
                        Loopback0                      10.10.10.10        Up              Up
default
                        GigabitEthernet0/0/0/5         10.10.10.11        Up              Up
default
                        GigabitEthernet0/0/0/5         172.16.0.1         Down            Down
default
                        MgmtEth0/RP0/CPU0/0            10.0.230.189       Up              Up
default
                        MgmtEth0/RP0/CPU0/1            unassigned      Shutdown          Down
default
                        PTP0/RP0/CPU0/1                unassigned      Shutdown          Down
default
                        RP/0/RP0/CPU0:ios#
```

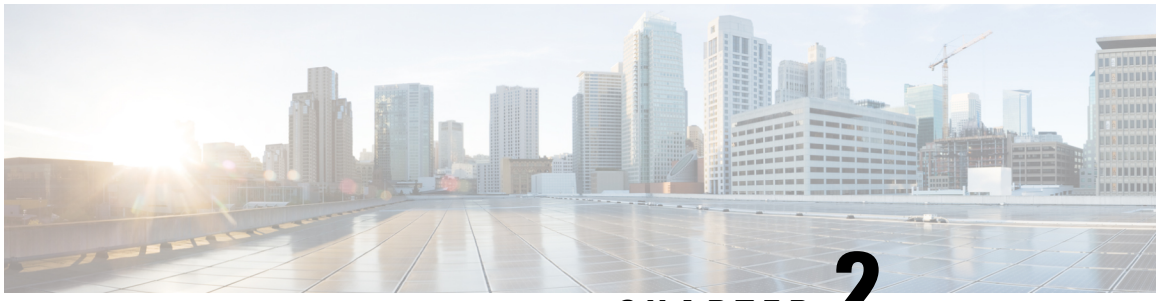

CHAPTER 2

Span Loss

Table 2: Feature History

Feature Name	Release Information	Feature Description
Span loss measurement	Cisco IOS XR Release 25.1.1	NCS 1014 measures span loss between two nodes. The measurement is performed using the OSC links created between the nodes by configuring the OSC pluggable to be operational and OSPFv2 protocol on the EDFA2 card on the nodes. These measurements are essential during network changes, like equipment installation or fiber repairs. You can configure both minimum and maximum span loss thresholds. If the received span loss exceeds the maximum threshold or falls below the minimum threshold, the system will trigger a SPAN-LOSS-OUT-OF-RANGE alarm. CLI commands are: • **optical-line-control** • **controller Ots** *R/S/I/P* **span-loss min** *value* • **controller Ots** *R/S/I/P* **span-loss min** *value*

• Span loss , on page 8

Span loss

Span loss is the optical signal loss over a fiber span between two network nodes. It is measured by comparing power levels at the transmitting (Tx) and receiving (Rx) ports, typically in decibels (dB). If span loss exceeds thresholds, alarms like "Span Loss Value Out Of Range" are triggered.

Span loss calculations

The span loss calculation is an automatic process for determining span losses between NCS 1014 nodes. The span loss verification algorithm calculates span loss by comparing power measurements at the line TX/RX port at the far-end and the line RX/TX port at the near end. If the span loss is not within configured thresholds, the algorithm raises the "Span Loss Value Out Of Range" alarm.

Span loss reporting

The span loss application periodically reports the span loss value for a span every few seconds. If there are changes in span loss, such as those caused by variations in fiber loss, the application typically updates the span loss value between 10 to 30 seconds after the value has stabilized.

Span loss verification reports these values:

- **OSC span loss**
- **Signal span loss**
- **Span loss**

OSC span loss

RX OSC span loss: This is the difference between the received OSC signal power at the near end and the transmitted OSC signal power at the far-end. It refers to the fiber entering the LINE RX port.

TX OSC span loss: This is the difference between the transmitted OSC signal power at the near end and the received OSC signal power at the far-end. It refers to the fiber exiting the LINE TX port.

Signal span loss

RX signal span loss: This is the difference between the received C-band signal power at the near end and the transmitted C-band signal power at the far-end. It refers to the fiber entering the LINE RX port.

TX signal span loss: This is the difference between the transmitted C-band signal power at the near end and the received C-band signal power at the far-end. It refers to the fiber exiting the LINE TX port.

Span loss

RX span loss: This measurement is the difference between the received total power at near-end and transmitted total power at far-end.

TX span loss: This measurement is the difference between the transmitted total power at near-end and received total power at far-end.

Configure span loss thresholds

Use this task to configure span loss thresholds

Before you begin

Establish the OSC link using OSPFv2.`

Procedure

Step 1 Use the commands **optical-line-control** and **controller ots** *R/S.I/P* to enter the optical applications configuration mode and select the controller on which the span loss thresholds need to be configured.

The span loss can be configured only controller ots on R/S/I/0.

Example:

```
RP/0/RP0/CPU0:ios(config)#optical-line-control
RP/0/RP0/CPU0:ios(config-olc)#controller ots 0/0/0/0
```

Step 2 Use the keywords **span-loss min** *value* and **span-loss max** *value*, to configure the minimum and maximum span loss threshold values.

Example:

```
RP/0/RP0/CPU0:ios(config-olc-ots)#span-loss min 0
RP/0/RP0/CPU0:ios(config-olc-ots)#span-loss max 420
```

The example sets the minimum threshold to 0.0 dB and the maximum threshold to 42.0 dB.

The system raises a SPAN-LOSS-OUT-OF-RANGE alarm when 'Rx span loss' is greater than the maximum threshold or lesser than the minimum threshold.

Step 3 Commit the changes and exit all the configuration modes.

Example:

```
RP/0/RP0/CPU0:ios(config-olc-ots)#commit
RP/0/RP0/CPU0:ios(config-olc-ots)#exit
RP/0/RP0/CPU0:ios(config-olc)#exit
RP/0/RP0/CPU0:ios(config)#
```

View the span loss measurements

Use this task to view the various span loss measurements.

Procedure

Use the **show olc span-loss** command to view the various span loss measurements.

Example:

```
RP/0/RP0/CPU0:ios#show olc span-loss
                       Wed Feb 19 14:20:12.542 IST

                       Controller                                : Ots0/0/0/0
                       Neighbour RID                             : 192.0.2.20
                           Rx Span Loss                              : 12.92 dB
                           Rx OSC Span Loss                          : 13.41 dB
                           Rx Signal Span Loss                       : 12.95 dB
                           Tx Span Loss                              : 13.67 dB
                           Tx OSC Span Loss                          : 14.52 dB
                           Tx Signal Span Loss                       : 13.65 dB
```

The entries, highlighted in bold, show the span loss measurements.

Verify span loss configurations

Use this task to verify the span loss configurations.

Procedure

Verify the configured values using the **show running-config optical-line-control controller ots** command.

Example:

```
RP/0/RP0/CPU0:ios##show running-config optical-line-control controller ots 0/0/0/0
                       Wed Oct  2 15:57:22.576 UTC
                       optical-line-control
                       controller ots 0/0/0/0
                       span-loss max 420
                           span-loss min 0
                       !
                       !
```

The entries, highlighted in bold, show the values of span loss thresholds configured.

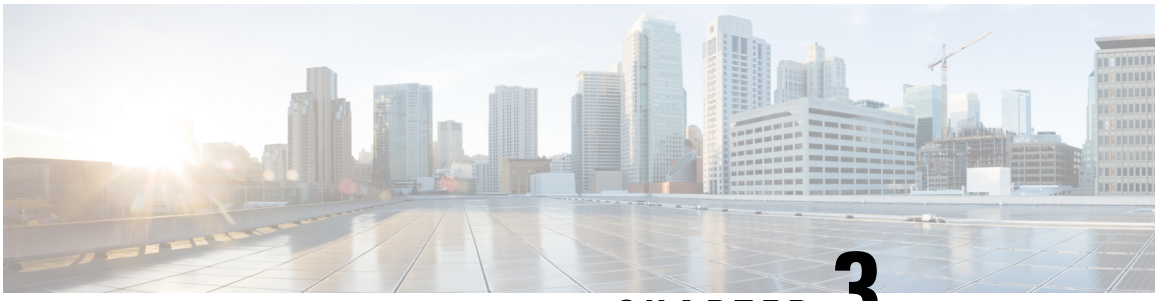

CHAPTER 3

Channel APC

This chapter describes channel APC.

Table 3: Feature History

Feature Name	Release Information	Feature Description
Automatic Power Control support for NCS1K14-EDFA2	Cisco IOS XR Release 25.2.1	Automatic power control maintains all channels at a consistent Power Spectral Density (PSD) target by regulating optical components. It keeps all channels at the same Power Spectral Density (PSD) target, ensuring equalized channel power regardless of different input powers. It compensates for changes in span loss over time by adjusting amplifier gain and variable optical attenuator (VOA) attenuation, maintaining stable total transmit and receive power.

- Channel APC, on page 11
- How channel APC works, on page 14
- Enable channel APC, on page 14
- Disable channel APC, on page 15
- Pause channel APC, on page 15
- Resume channel APC, on page 16
- Set target PSD for channel APC, on page 16
- Configure input amplifier, on page 17
- View channel APC information, on page 17

Channel APC

From Release 25.2.1, Channel APC is supported on the EDFA2 card. It is an optical application that maintains all optical channels at a consistent Power Spectral Density (PSD) target by dynamically regulating optical components. This ensures a flat spectrum before transmission over the fiber span.

The purpose of the Channel APC control loop is to equalize the Power Spectral Density (PSD) of all channels to a defined Channel Target PSD.

- **Channel Target PSD:**

  This is an optical-line-control (OLC) configuration parameter that defines the desired PSD level for all channels. By default, this value is –20 dBm, measured in dBm/12.5GHz.

- **Optical Channel Monitor (OCM):**

  The OCM device provides readings of the channel power spectral density, dividing the spectrum into 6.25GHz slices. The Channel PSD is calculated based on readings from the OCM and is averaged over the central 25GHz bandwidth.

- **Input Channel Acceptance:**

  Before a channel is transmitted, its input PSD is evaluated against the Channel PSD target plus a defined margin (PSD_MARGIN). A channel is accepted and unblocked by the Wavelength Blocker (WB) if its estimated PSD after initial amplification and WB insertion loss is greater than the target PSD plus the margin.

- **PSD Control Loop:**

  Once a channel is accepted, the WB attenuation for the channel's slices is adjusted from maximum to an initial value calculated to bring the Channel PSD near or slightly below the target. The control loop then periodically monitors the Channel PSD at the WB output. If the discrepancy between the measured PSD and the target PSD exceeds a defined threshold (PSD Correction Tolerance), the WB attenuation is corrected incrementally. The loop continues until the discrepancy is small, applying a final correction equal to the residual error. The loop regulates again if the discrepancy later exceeds the threshold.

This diagram shows the NCS1K14-EDFA2 line card optical layout. Optical components controlled by channel APC are highlighted in green.

Figure 2: NCS1K14-EDFA2 line card optical layout

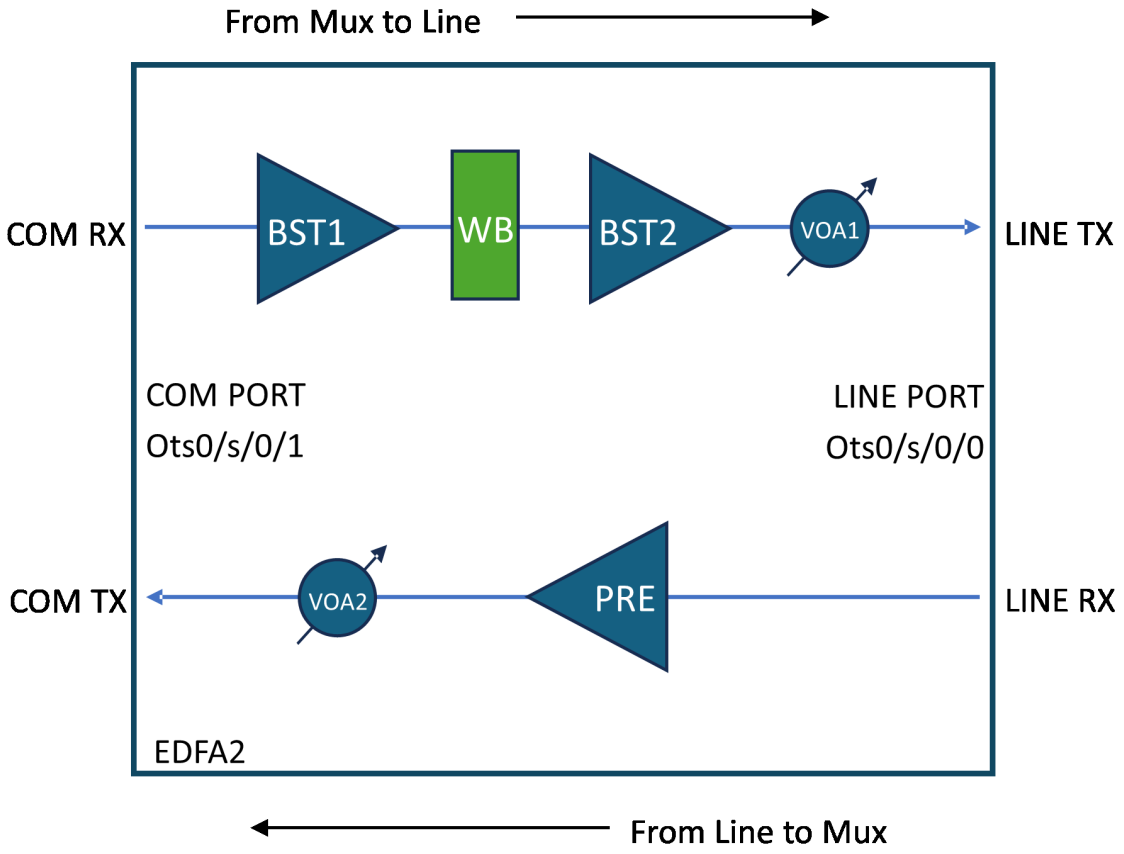

Channel Acceptance and Blocking Criteria

- **Acceptance:**
  - By default, WB blocks all C-band spectrum.
  - Channels must have PSD after WB (0 attenuation) higher than the target PSD plus a 0.5 dBm/12.5 GHz margin to be accepted.
- **Blocking:**
  - Channels with WB attenuation at 0 dB and PSD lower than target PSD minus 2.0 dBm/12.5 GHz tolerance are blocked by the control loop.

How channel APC works

Summary

Channel APC control loop equalizes the Power Spectral Density (PSD) of all channels to a defined Channel Target PSD.

Workflow

These stages describe channel APC process:

1. Input and Amplification:
   - Channels enter via Controller Ots0/<slot>/0/1 (COM-RX).
   - First stage amplification by BST1.
   - Channel APC equalizes PSD across channels before the second stage amplifier (BST2 + VOA1).
2. Wavelength Blocker (WB):
   - Controls attenuation per 6.25 GHz slice (0 to 15 dB or full block).
   - Channel power equalization is based on a configurable Channel Target PSD (default: -20 dBm/12.5 GHz).
   - PSD is averaged over the central 25 GHz bandwidth from OCM measurements.
3. Channel APC Control:
   - When enabled, Channel APC overrides manual WB attenuation settings.
   - OSC channel is excluded from Channel APC control.

Enable channel APC

This topic describes how to enable channel APC.

This task describes how to configure channel APC. This configuration is in this topic:

- Enable channel APC

Procedure

Use the following commands to enable channel APC:

```
configure
optical-line-control
controller ots <Rack/Slot/Instance/Port>
channel-apc flat-psd-eq-mode
```

```
commit
end
```

Disable channel APC

This topic describes how to disable channel APC.

This task describes how to configure channel APC. This configuration is in this topic:

- Disable channel APC

Procedure

Use the following commands to disable channel APC:

```
configure
optical-line-control
controller ots <Rack/Slot/Instance/Port>
no channel-apc flat-psd-eq-mode
commit
end
```

Pause channel APC

This topic describes how to pause channel APC.

This task describes how to configure channel APC. This configuration is in this topic:

- Pause channel APC

Procedure

Use the following commands to pause channel APC:

```
configure
optical-line-control
controller ots <Rack/Slot/Instance/Port>
channel-apc-pause
commit
end
```

Resume channel APC

This topic describes how to resume channel APC.

This task describes how to configure channel APC. This configuration is in this topic:

- Resume channel APC

Procedure

Use the following commands to resume channel APC:

```
configure
optical-line-control
controller ots <Rack/Slot/Instance/Port>
no channel-apc-pause
commit
end
```

Set target PSD for channel APC

This topic describes how to set target PSD for channel APC.

This task describes how to configure channel APC. This configuration is in this topic:

- Set target PSD for chanel

Procedure

Use the following commands to set target PSD for a channel:

```
configure
optical-line-control
controller ots <Rack/Slot/Instance/Port>
psd-target <value in dBm/12.5GHz>
commit
end
```

Example:

This sample configuration sets the target PSD to -22 dBm/12.5 GHz:

```
configure
optical-line-control
controller ots 0/0/0/0
psd-target -220
commit
end
```

Configure input amplifier

This topic describes how to configure channel APC.

In scenarios with low total input power, you must adjust BST1 amplifier gain and range. This table shows some typical scenarios:

Table 4: BST1 Amplifier Configuration

Optical Interfaces	Spacing	BST1 Total Input Power [dBm]	BST1 range	BST1 Gain [dB]
400ZR	75 GHz	0.2~2.3	Extended	18.5
mix 400ZR/800ZR	75/150 GHz	-5~0.2	Extended	18.5
800ZR	150 GHz	0.6~1.2	Extended	18.5
DCI	75 GHz	6~6.9	Normal	8
mix DCI/DCI-1	75/150 GHz	5.3~6.9	Normal	8
DCI-1	150 GHz	9.8~10.4	Normal	8
DCI-2 (CIM8)	150 GHz	11.4~12.2	Normal	8

Procedure

Use the following commands to adjust BST1 amplifier gain and gain range:

```
configure
controller ots <Rack/Slot/Instance/Port>
ingress-ampli-gain-range <normal|extended>
ingress-ampli-gain <gain_value_in_tenths_of_dB>
commit
end
```

Example:

This sample configuration sets BST1 gain range to extended and the gain to 19.5 dB:

```
configure
controller ots 0/0/0/1
ingress-ampli-gain-range extended
ingress-ampli-gain 195
commit
end
```

View channel APC information

This task describes how to view channel APC information.

These tables describe the different parameters and status values in the output of the show command.

Table 5: Channel APC parameter definitions

Parameter	Description
Controller	Identifier of the optical controller managing the channel, formatted as Ots0/slot/interface/port.
Internal Status	Current state of the Channel APC control loop, e.g., IDLE means regulation is complete and stable.
Input Gain	Gain value (in dB) applied by the first stage amplifier (BST1) to the input signal.
Input Gain Range	Gain range mode of the BST1 amplifier, e.g., Normal or Extended, indicating the amplifier's operating range.
Input Gain Range Min - Max	Minimum and maximum gain values (in dB) for the BST1 amplifier in the current gain range.
Last Correction	Timestamp of the last adjustment made by the Channel APC control loop to equalize channel power.
Output PSD Target	Target Power Spectral Density (PSD) value (in dBm/12.5 GHz) that the Channel APC aims to maintain for all channels.
PSD Correction Tolerance	Allowed deviation margin (in dB) from the target PSD before the Channel APC initiates a correction.

Table 6: Channel APC status definitions

Status	Description
BLOCKED	Triggered by amplifier safety events (APR, OSRI), RX-LOS alarms, or OTS controller shutdown. The following reasons can cause this status: • INPUT-EDFA-OSRI-ENABLED • OUTPUT-EDFA-OSRI-ENABLED • INPUT-EDFA-RX-LOS • OUTPUT-OTS-SHUTDOWN • INPUT-OTS-SHUTDOWN
PAUSED	Regulation paused via channel-apc-pause command; no adjustments occur.
IDLE	Regulation complete; all channels meet target PSD within tolerance.
REGULATING	Active regulation in progress to correct PSD discrepancies.

Table 7: Channel APC table parameters

Parameter	Description
Controller	Ots-Och r/s/i/p/<channel-id> Channel in input to the COM-RX

Center Frequency	Central frequency of the channel
Width	Width of the channel
Status	Status of the Channel, see the *Channel APC per-channel status definitions* table.
Spectrum	Set of spectrum slices belonging to the channel
Input PSD	Channel Input power in term of PSD at COM-RX input port
Input Power	Channel Input power at COM-RX input port
Channel PSD	Channel power in term of PSD after the WB block. It should be next to the PSD target less than the *PSD Correction Tolerance* parameter shown by the command
Channel Power	Channel power after the WB block
PSD Discrepancy	Current error margin between the *Channel PSD* and the *Configured Target PSD*. It the value increases above the *PSD Correction Tolerance*, a new regulation sequence starts.
Attenuation	The attenuation value configured on the WB to reach the target.

Table 8: Channel APC per-channel status definitions

Channel Status	Description
Active	Channel is managed and matches target PSD at WB output.
Not Active	Channel power insufficient to reach target PSD; channel is blocked or inactive.
Regulating	Channel is currently undergoing PSD adjustment.
Out Of Range	Channel PSD too high or too low to be active even with max or zero attenuation.

Procedure

To view channel APC information, use the **show olc channel-apc regulation-info** command.

Example:

```
RP/0/RP0/CPU0:IOS#show olc channel-apc regulation-info

Thu Jul 17 16:06:13.213 CEST


Controller                              : Ots0/0/0/0

Internal Status                         : IDLE

Input Gain                              : 8.0 dB

Input Gain Range                        : Normal

Input Gain Range Min - Max              : 5.0 - 11.0 dB

Last Correction                         : 2025-07-17 14:23:18

Output PSD Target                       : -20.0 dBm/12.5GHz
```

```
PSD Correction Tolerance                : 0.3 dB



Controller          Center       Width      Status          Spectrum       Input          Input
   Channel        Channel     PSD           Attenuation

                     Frequency    (GHz)                     6.25 GHz       PSD            Power
    PSD            Power       Discrepancy   (dB)

                     (THz)                                  Slices Range   (dBm/12.5GHz)  (dBm)
    (dBm/12.5GHz)  (dBm)       (dBm)
=============================================================================================================

Ots-Och0/0/0/0/1    196.100000   75.000     Not Active      779 - 790      -50.00         -50.00
   -50.00         -50.00      -             25.00

Ots-Och0/0/0/0/2    196.025000   75.000     Active          767 - 778      -24.22         -18.10
   -19.97         -14.00      0.03          0.10

Ots-Och0/0/0/0/3    195.950000   75.000     Not Active      755 - 766      -50.00         -50.00
   -50.00         -50.00      -             25.00
```

Note
APC periodically monitors the per channel Power Spectral Density (PSD) discrepancy. If the measured discrepancy exceeds the **PSD Correction Tolerance**, the APC initiates regulation on the Line Controller to reduce each channel's discrepancy below the defined tolerance. This regulation ensures a flat spectrum before the EDFA facing the LINE port.

- The regulation process may take a few seconds to complete.
- During this time, the APC status transitions and eventually reaches the final state **IDLE**.
- The values displayed by the command `show olc channel-apc controller Ots0/0/0/0 regulation-info` reflect the state of the LC at the moment the command is executed.
- Because the regulation is ongoing during this period, some values shown may already reflect the final regulated state, while others may not yet have updated to the final values.

This behavior is important to understand when interpreting the output of the channel APC regulation status, as transient discrepancies in the displayed data can occur during the regulation process.

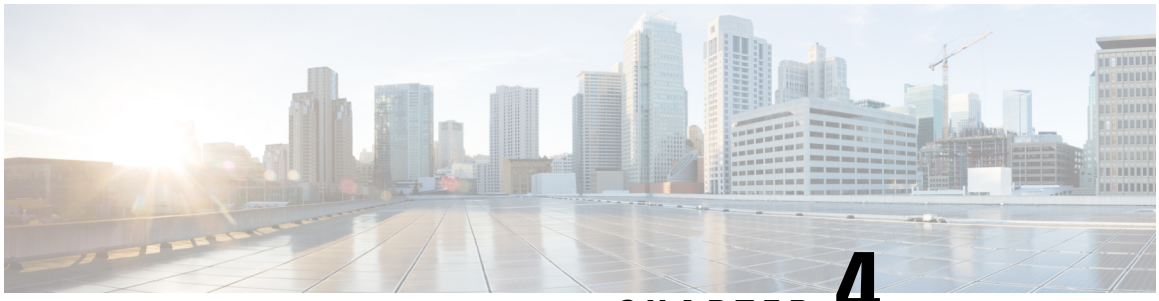

CHAPTER 4

Amplifier APC

This chapter describes amplifier APC.

- Amplifier APC, on page 21
- How amplifier APC works, on page 22
- Enable Amplifier APC, on page 23
- Disable Amplifier APC, on page 23
- Pause Amplifier APC, on page 24
- Resume Amplifier APC, on page 24
- Configure fiber type, on page 25
- View amplifier APC information, on page 25

Amplifier APC

From Release 25.2.1, Amplifier Automatic Power Control (APC) is supported on the EDFA2 card. APC is an optical; application that compensates for span loss variations over time in optical fiber links. This compensation ensures stable optical power levels despite changes in span loss.

Amplifier APC is implemented by two independent control loops:

- Line TX direction: Managed by controller Ots0/<slot>/0/0, which acts on VOA1 attenuation.
- Line RX direction: Managed by controller Ots0/<slot>/0/1, which acts on PRE-Amplifier Gain.

This diagram shows the NCS1K14-EDFA2 line card optical layout. Optical components controlled by amplifier APC are highlighted in green.

Figure 3: NCS1K14-EDFA2 line card optical layout

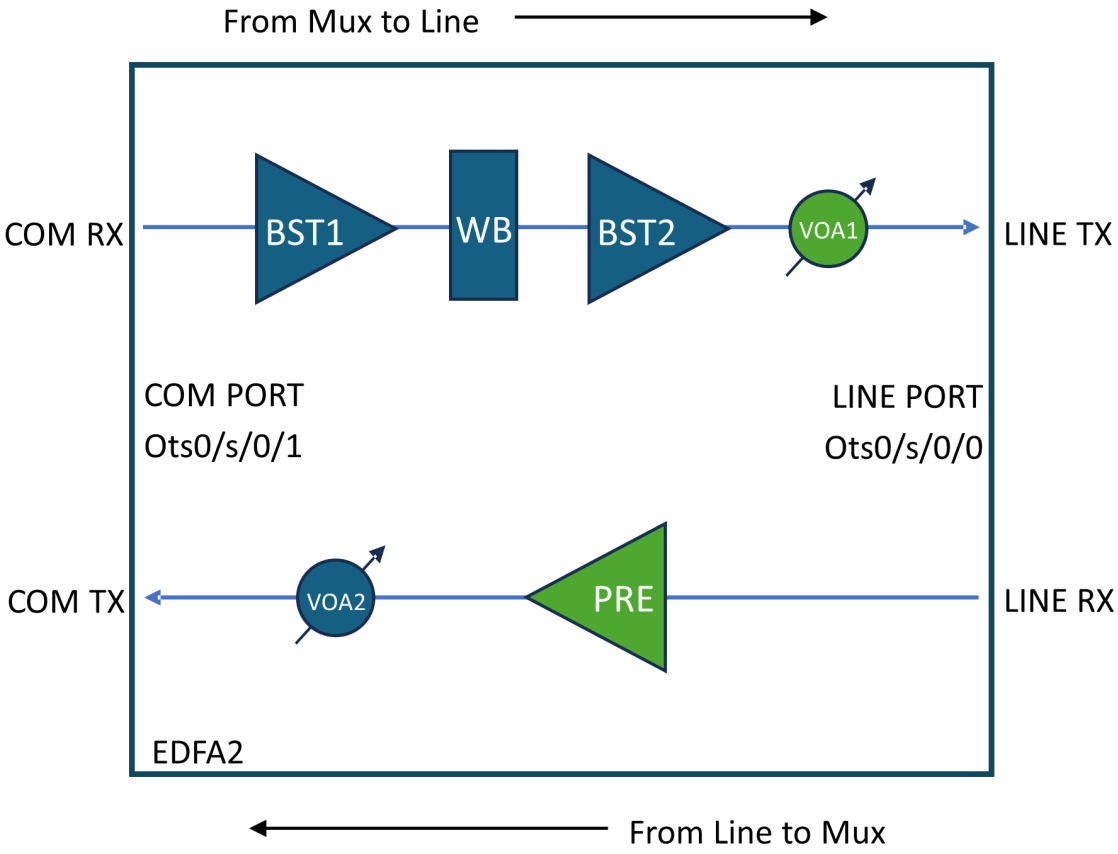

How amplifier APC works

Summary

Amplifiers APC control loop compensates the span loss variation over time.

Workflow

These are the stages of amplifier apc process.

1. A span loss variation greater than 0.5 dB triggers the control loops to perform correction.
2. For a given direction (e.g., from near-end towards far-end), a span loss change is compensated by adjusting:
   - Near-end TX **VOA1 attenuation** or
   - Far-end RX **PRE gain**.
3. Span loss changes are detected by the OLC Span Loss application, which notifies the APC application to trigger a correction. For a given direction, a span loss change is compensated by adjusting the near-end transmit VOA1 attenuation and/or the far-end receive PRE gain.

- **Lookup Table:**

  The VOA attenuation and PRE gain adjustments are derived using an internal lookup table. This table is indexed by Fiber Type and the current Span Loss value, returning the appropriate VOA1 attenuation and PRE gain values. The lookup table defines how much of the span loss variation is compensated by the TX VOA attenuation and how much by the RX PRE gain.

- **PRE Amplifier Saturation Control:**

  An additional control loop is implemented to limit the PRE gain configuration to avoid amplifier saturation, ensuring that the output power does not exceed the maximum allowed value based on the input power and the calculated gain from the lookup table.

Enable Amplifier APC

This topic describes how to enable amplifier APC.

This task describes how to configure amplifier APC. These configurations are in this topic:

- Enable amplifier APC on COM port
- Enable amplifier APC on line port

Procedure

Step 1 Use these commands to enable amplifier APC on COM port

```
configure
optical-line-control
controller ots 0/<slot>/0/1
ampli-apc span-mode
commit
end
```

Step 2 Use these commands to enable amplifier APC on line port

```
configure
optical-line-control
controller ots 0/<slot>/0/0
ampli-apc span-mode
commit
end
```

Disable Amplifier APC

This topic describes how to disable amplifier APC.

This task describes how to configure amplifier APC. These configurations are in this topic:

- Disable amplifier APC on COM port

- Disable amplifier APC on line port

Procedure

Step 1 Use these commands to disable amplifier APC on COM port

```
configure
optical-line-control
controller ots 0/<slot>/0/1
no ampli-apc span-mode
commit
end
```

Step 2 Use these commands to disable amplifier APC on line port

```
configure
optical-line-control
controller ots 0/<slot>/0/0
no ampli-apc span-mode
commit
end
```

Pause Amplifier APC

This topic describes how to pause amplifier APC.

This task describes how to configure amplifier APC. This configuration is in this topic:

- Pause amplifier APC

Procedure

Use these commands to pause amplifier APC

```
configure
optical-line-control
controller ots 0/<slot>/0/<port>
ampli-apc-pause
commit
end
```

Resume Amplifier APC

This topic describes how to configure amplifier APC.

This task describes how to configure amplifier APC. This configuration is in this topic:

- Resume amplifier APC

Procedure

Use these commands to resume amplifier APC

```
configure
optical-line-control
controller ots 0/<slot>/0/<port>
no ampli-apc-pause
commit
end
```

Configure fiber type

This topic describes how to configure fiber type.

This task describes how to configure amplifier APC. This configuration is in this topic:

- Configure fiber type

Procedure

Use these commands to configure fiber type

```
configure
optical-line-control
controller ots 0/<slot>/0/1
fiber-type <fiber_type>
commit
```

Note
Only **SMF** and **E-LEAF** fiber types are currently supported by Amplifier APC. If not explicitly configured, SMF fiber type is used by default.

View amplifier APC information

This task describes how to view amplifier APC information.

The Line TX direction control loop acts on VOA1 attenuation and is managed by controller `Ots0/<slot>/0/0`.

Table 9: Field Descriptions for Line TX:

Field	Description

Gain Range	BST2 gain range
Last Correction	Last VOA1 attenuation correction time stamp
Last Span-Loss Input	Last Line TX span loss value measured
Last Span-Loss Input Timestamp	Last Line TX span loss measure time stamp
Span-Loss Correction Threshold	Threshold below which no correction is triggered
Egress Ampli Input Power	BST2 input power
Egress Ampli Gain	BST2 gain
Egress Ampli Output Power	BST2 output power
TX VOA Attenuation	VOA1 attenuation
TX Signal Power	Signal power on Line TX

The Line RX direction control loop acts on PRE amplifier gain and is managed by controller `Ots0/<slot>/0/1`.

Table 10: Field Descriptions for Line RX:

Field	**Description**
Gain Range	PRE gain range
Last Correction	Last PRE gain correction time stamp
Last Span-Loss Input	Last Line RX span loss value measured
Last Span-Loss Input Timestamp	Last Line RX span loss measure time stamp
Span-Loss Correction Threshold	Threshold below which no correction is triggered
Egress Ampli Input Power	PRE input power
Egress Ampli Gain	PRE gain
Egress Ampli Output Power	PRE output power
TX VOA Attenuation	VOA2 attenuation
TX Signal Power	Signal power on Com TX

Table 11: Amplifier APC status definitions

Amplifier APC Status	Description
BLOCKED	The APC moves to BLOCKED state if: • An amplifier safety event like APR or OSRI has been triggered • RX-LOS alarm on Ots controllers • OTS controller(s) shutdown
PAUSED	APC is paused using the ampli-apc-pause command. No regulation is executed on VOA2 or PRE amplifier when in this status.
IDLE	APC regulation has been completed successfully; no current adjustments are being made.
REGULATING	APC detected a span loss variation and is actively adjusting VOA2 attenuation and/or PRE gain.

Table 12: Reasons for line TX direction APC blocking

Blocking Reason	Description
OUTPUT-EDFA-OSRI-ENABLED	OSRI triggered on the BST2 amplifier
OUTPUT-EDFA-ALS	BST2 amplifier in Auto Laser Shutdown
OUTPUT-OTS-SHUTDOWN	Ots controller shutdown (output side)
INPUT-OTS-SHUTDOWN	Ots controller shutdown (input side)

Table 13: Reasons for line RX direction APC blocking

Blocking Reason	Description
OUTPUT-EDFA-OSRI-ENABLED	OSRI triggered on the PRE amplifier
INPUT-EDFA-RX-LOS	RX-LOS alarm present on the Ots0/<slot>/0/0 controller
OUTPUT-OTS-SHUTDOWN	Ots controller shutdown (output side)
INPUT-OTS-SHUTDOWN	Ots controller shutdown (input side)

Procedure

Step 1 To view channel APC information for Line TX direction, use the **show olc ampli-apc controller Ots R/S/0/0 regulation-info** command.

Example:

Typical output when the Line TX direction control loop is the IDLE state.

```
RP/0/RP0/CPU0:ios#show olc ampli-apc controller Ots 0/0/0/0 regulation-info
Mon Jul  7 17:01:56.549 CEST
```

```
Controller                              : Ots0/0/0/0
Internal Status                         : IDLE
Gain Range                              : Normal
Last Correction                         : 2025-07-07 15:43:40
Last Span-Loss Input                    : 28.30 dB
Last Span-Loss Input Timestamp          : 2025-07-07 16:49:20
Span-Loss Correction Threshold          : 0.5 dB


  Device Parameters                      Min           Max           Configuration
Operational
=============================================================================================================

  Egress Ampli Input Power (dBm)   :      -             -             -                      -33.95

  Egress Ampli Gain (dB)           :      -             -              -                      35.00

  Egress Ampli Output Power (dBm)  :      -             22.5           -                       7.99

  TX VOA Attenuation (dB)          :      0.0           20.0          0.0                     0.20

  TX Signal Power (dBm)            :      -             -              -                      7.84
```

Typical output when the Line TX direction control loop is the BLOCKED state.

```
RP/0/RP0/CPU0:ios#show olc ampli-apc controller Ots 0/0/0/0 regulation-info
Mon Jul  7 17:07:39.033 CEST

Controller                              : Ots0/0/0/0
Internal Status                         : BLOCKED
Blocked Reason                          : [ OUTPUT-EDFA-ALS ]
Gain Range                              : Normal
Last Correction                         : 2025-07-07 15:43:40
Last Span-Loss Input                    : 28.30 dB
Last Span-Loss Input Timestamp          : 2025-07-07 16:49:20
Span-Loss Correction Threshold          : 0.5 dB


  Device Parameters                      Min           Max           Configuration
Operational
=============================================================================================================

  Egress Ampli Input Power (dBm)   :      -             -             -                      -34.03

  Egress Ampli Gain (dB)           :      -             -              -                       0.00

  Egress Ampli Output Power (dBm)  :      -             22.5           -                      -50.00

  TX VOA Attenuation (dB)          :      0.0           20.0          0.0                      0.00

  TX Signal Power (dBm)            :      -             -              -                      -50.00
```

Step 2 To view channel APC information for Line RX direction, use the **show olc ampli-apc controller Ots R/S/0/1 regulation-info** command.

Example:

Typical output when the Line RX direction control loop is the IDLE state.

```
RP/0/RP0/CPU0:ios#show olc ampli-apc controller Ots 0/0/0/1 regulation-info
Mon Jul  7 17:36:51.991 CEST

Controller                              : Ots0/0/0/1
```

```
Internal Status                          : IDLE
Gain Range                               : Extended
Last Correction                          : 2025-07-07 12:59:08
Last Span-Loss Input                     : 5.93 dB
Last Span-Loss Input Timestamp           : 2025-07-07 17:22:28
Span-Loss Correction Threshold           : 0.5 dB

  Device Parameters                       Min           Max           Configuration
Operational
=============================================================================================================

  Egress Ampli Input Power (dBm)   :      -             -             -                       -18.40

  Egress Ampli Gain (dB)           :      20.0          39.0          20.0                     20.00

  Egress Ampli Output Power (dBm)  :      -             22.0           -                        1.85

  TX VOA Attenuation (dB)          :      -             -              -                       15.00

  TX Signal Power (dBm)            :      -             -              -                      -12.89
```

Typical output when the Line RX direction control loop is the BLOCKED state.

```
RP/0/RP0/CPU0:ios#show olc ampli-apc controller Ots 0/0/0/1 regulation-info
Mon Jul  7 17:38:23.759 CEST

Controller                               : Ots0/0/0/1
Internal Status                          : BLOCKED
Blocked Reason                           : [ OUTPUT-EDFA-OSRI-ENABLED ]
Gain Range                               : Extended
Last Correction                          : 2025-07-07 12:59:08
Last Span-Loss Input                     : 5.93 dB
Last Span-Loss Input Timestamp           : 2025-07-07 17:22:28
Span-Loss Correction Threshold           : 0.5 dB

  Device Parameters                       Min           Max           Configuration
Operational
=============================================================================================================

  Egress Ampli Input Power (dBm)   :      -             -             -                       -18.39

  Egress Ampli Gain (dB)           :      20.0          39.0          20.0                      0.00

  Egress Ampli Output Power (dBm)  :      -             22.0          -                       -50.00

  TX VOA Attenuation (dB)          :      -             -              -                       15.00

  TX Signal Power (dBm)            :      -             -              -                      -50.00
```

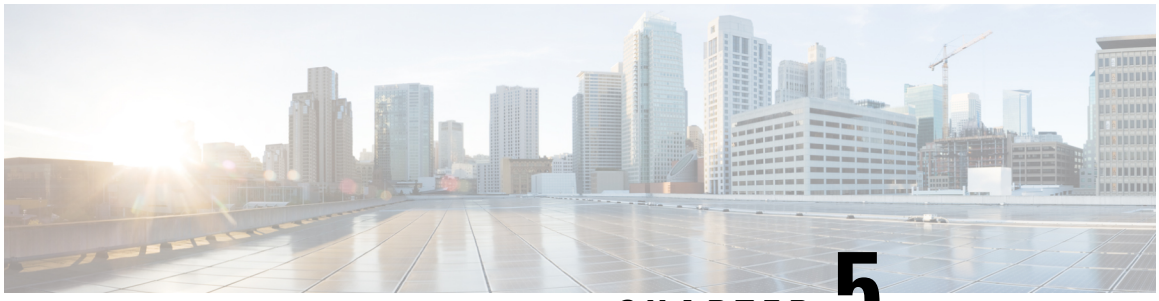

CHAPTER 5

Configure OTDR

- ONS-QSFP-OTDR pluggables, on page 31
- OTDR modes , on page 33
- OTDR negotiations, on page 33
- Configure the OTDR scan parameters for auto and expert modes, on page 35
- Start the OTDR scan manually, on page 37
- View the OTDR measurements, on page 38
- Stop the OTDR scan, on page 38
- Automatic bidirectional OTDR scan, on page 39
- OTDR scan status, on page 42
- OTDR baseline, on page 44

ONS-QSFP-OTDR pluggables

An ONS-QSFP-OTDR pluggable is an optical time-domain reflectometer (OTDR) module that

- uses a Q-DD form factor and plugs into port 6 of the NCS1K14-EDFA2 line card within the NCS1014 chassis,
- enables manual scans to assess and diagnose the condition and performance of an optical fiber network, and
- identifies fiber faults and events by sending short optical pulses and measuring the Rayleigh backscatter along the fiber.

Table 14: Feature History

Feature Name	Release Information	Feature Description
ONS-QSFP-OTDR pluggable	Cisco IOS XR Release 25.1.1	The ONS-QSFP-OTDR is a Q-DD form factor module that plugs into port 6 of the NCS1K14-EDFA2 line card, within the NCS1014 Chassis. With this pluggable, you can conduct a manual scan to assess and diagnose the condition and performance of an optical fiber network. CLI commands are: • **otdr-start controller ots** *R/S/I/P* **{rx|tx}** • **otdr-stop controller ots** *R/S/I/P* **{rx|tx}**

An ONS-QSFP-OTDR pluggable is designed for use with the EDFA2 card and provides real-time measurements of loss and back reflection for the fiber pair connected to the TX and RX ports.

SOR file

You can view OTDR measurement results in a Standard OTDR Record (SOR) file. The SOR file includes fiber trace details such as distance, reflectance, loss, and fiber attenuation measurements.

Benefits

ONS-QSFP-OTDR pluggables offer several benefits:

- Assess the quality of the fiber during system installation, before any live traffic run.
- Monitor the fiber link during operation, including live traffic. You can also monitor the fiber link during troubleshooting after cable cuts or repairs.
- Measure attenuation over the entire fiber link and across individual fiber sections.
- Determine the distance and magnitude of insertion loss and reflection loss.
- Detect fiber events, including concentrated loss events, reflection events, end-of-fiber events, and discontinuities or defects such as pinches or cuts. The OTDR pluggable can also detect loss events from splicing, patch panel connections, and couplers.

Limitations

The ONS-QSFP-OTDR pluggable has these limitations:

- The OTDR scan feature is supported only on the LINE OTS controller.

- Scans are conducted separately for the OTS controller in the RX direction or TX direction.

OTDR modes

In NCS 1014, OTDR works in two modes:

- Auto
- Expert

Auto mode

The device automatically selects the optimal values for OTDR pulse width, scan duration, capture start time, and capture end time parameters. This is the default mode and does not require explicit configuration. However, you can manually configure the other scan parameters if needed.

Expert mode

You must manually configure all OTDR scan parameters with the required valid values for measurement. Automatic adjustments are not performed in this mode.

OTDR negotiations

An OTDR negotiation is a network coordination process that

- uses a message-based handshake between two adjacent network nodes equipped with OTDR devices,
- ensures that only one node may initiate an OTDR scan at a time to prevent simultaneous scans on the same fiber, and
- helps avoid measurement conflicts to ensure accurate scan results.

You can use **force** option in the command **otdr-start controller ots** *R/S/I/P* to bypass negotiation during the OTDR scan process.

Table 15: Feature History

Feature Name	Release Information	Feature Description
OTDR negotiation	Cisco IOS XR Release 25.2.1	The OTDR scan process has been enhanced to include negotiation with a remote peer before initiating the scan. This negotiation helps prevent simultaneous scans on the same fiber, thereby avoiding measurement conflicts and ensuring accurate scan results. The force option can be used to start a scan without negotiation. However, it should be used carefully to avoid simultaneous scans between the near-end and far-end nodes on the same fiber. Command modified: The keyword **force** has been added to the **otdr-start controller ots** *R/S/I/P direction* command.

Advantage

OTDR negotiations help prevent simultaneous scans on the same fiber, thereby avoiding measurement conflicts and ensuring accurate scan results.

How OTDR negotiation works

To ensure an efficient and conflict-free OTDR scan process, the local node follows these steps:

1. Before starting any OTDR scan, the local node checks if the fiber is available for scanning.
2. The local node verifies whether there is an ongoing scan from the remote node.
3. If no scan is currently running on the fiber, the local node requests a remote span reservation.
4. If the remote node acknowledges the remote span reservation, the local node initiates the scan.

   This process prevents conflicts between peer node scans.

Note If the link between the nodes is down or OSC pluggable is missing, the negotiation cannot occur, and the scan request will fail. In this scenario, you can still initiate an OTDR scan without negotiation. See Start the OTDR scan manually, on page 37.

Configure the OTDR scan parameters for auto and expert modes

Follow these steps to configure the various parameters for the OTDR scan. If you do not configure the OTDR scan parameters, the NCS 1014 device uses the default values for OTDR scan parameters.

Procedure

Step 1 Enter the OTS controller configuration mode for the port on which you want to configure the OTDR parameters.

Example:

```
RP/0/RP0/CPU0:ios#config
RP/0/RP0/CPU0:ios(config)#controller ots 0/0/0/0
```

Step 2 Enter the OTDR mode.

If you want to configure the	then run the command
Expert mode	`RP/0/RP0/CPU0:ios(config-Ots)#otdr scan-mode expert`
Auto mode	Auto mode is the default and does not require explicit configuration.

Step 3 Set the required parameters for the OTDR scan. See OTDR scan parameters for auto and expert modes, on page 35 for the complete list of OTDR parameters, commit, and exit the configuration.

Example:

```
RP/0/RP0/CPU0:ios(config-Ots)#otdr rx auto reflectance-threshold -50
RP/0/RP0/CPU0:ios(config-Ots)#otdr rx auto splice-loss-threshold 0.2
RP/0/RP0/CPU0:ios(config-Ots)#otdr rx expert pulse-width 6000
RP/0/RP0/CPU0:ios(config-Ots)#commit
RP/0/RP0/CPU0:ios(config-Ots)#exit
RP/0/RP0/CPU0:ios(config)#exit
```

OTDR scan parameters for auto and expert modes

This table provides an overview of key OTDR parameters, including their definitions, measurement units, range of values and the default values for Auto and Expert modes.

Table 16: OTDR scan parameters in Auto mode

Parameter	Description	Unit	Range	Default
otdr { rx | tx} auto reflectance-threshold *<value>*	Threshold beyond which a reflective anomaly is reported as an event in the Rx or Tx direction.	dB	–50 to –10	–40

Parameter	Description	Unit	Range	Default
otdr { rx | tx} auto splice-loss-threshold <*value*>	Threshold beyond which a loss anomaly is reported as an event in Rx or Tx direction.	dB	0.2 to 5	0.35
otdr { rx | tx} auto excess-reflection-threshold <*value*>	Threshold beyond which a reflective event is reported as an excessive reflection event in the Rx or Tx direction.	dB	–50 to –23	–23
otdr { rx | tx} auto back-scattering <*value*>	The back scattering value in the Rx or Tx direction.	dB	–90 to –70	–81.87
otdr { rx | tx} auto refractive-index <*value*>	The refractive-index value in the Rx or Tx direction.	—	1.000 to 2.000	1.4682
otdr { rx | tx} auto excess-orl-threshold<*value*>	Threshold below which OTDR-ABS-ORL-EXCEEDED alarm is reported in the Rx or Tx direction.	dB	10 to 60	60
otdr { rx | tx} auto excess-attenuation-threshold<*value*>	Threshold beyond which a Non-Reflective event is reported as an excessive attenuation event in the Rx or Tx direction.	dB	0.5 to 99	5
otdr { rx | tx} auto end-of-fiber-loss-threshold <*value*>	Threshold based on which the OTDR identifies the fiber's end, distinguishing it from other components like splices or connectors.	dB	0.5 to 31.0	5.0

Table 17: OTDR scan parameters in Expert mode

Parameter	Description	Unit	Range	Default
otdr {rx | tx} expert pulse-width <*value*>	Pulse width to be used during the expert scan in the Rx or Tx direction.	ns	8 to 50000	20000
otdr {rx | tx} expert capture-end<*value*>	OTDR capture endpoint during the expert scan in the Rx or Tx direction.	cm	0 to 11900000	11900000
otdr {rx | tx} expert capture-start <*value*>	OTDR capture start point during expert scan in the Rx or Tx direction	cm	0 to 11900000	0

Parameter	Description	Unit	Range	Default
otdr {rx | tx} expert scan duration<*value*>	OTDR scan duration during expert scan in the Rx or Tx direction.	seconds	0 to 360	180

Start the OTDR scan manually

Use this procedure to manually initiate the OTDR scan to diagnose fiber defects, check fiber quality, or verify proper installation.

Before you begin

Perform the patch cord connection check before starting the manual scan.

Procedure

Step 1 Use the **otdr-start controller ots** *R/S/I/P direction* to start the OTDR scan manually.

Example:

```
RP/0/RP0/CPU0:ios#otdr-start controller ots 0/3/0/0 tx
Tue Jan 7 04:14:13.712 UTC
OTS OTDR Scan Started at TX

RP/0/RP0/CPU0:ios#otdr-start controller ots 0/3/0/0 rx
Tue Jan 7 04:33:33.326 UTC
OTS OTDR Scan Started at RX
```

Step 2 Use the `force` keyword, to run the manual OTDR scan operation without negotiating with the peer or when the communication channel is not up.

Example:

```
RP/0/RP0/CPU0:ios#otdr-start controller ots 0/0/0/0 rx force
Wed Sep 4 08:78:34.186 UTC
OTS OTDR Scan Started at RX
RP/0/RP0/CPU0:ios#
```

The forced **otdr-start** command can fail immediately if the OTDR is already performing a scan on any of the four possible spans associated with the ports (0-TX, 0-RX, 2-TX, 2-RX). In such cases, this error message may appear:

OTDR Scan cannot be started as another scan is in progress.

To resolve this issue, wait before attempting to restart the OTDR scan until the ongoing scan is complete.

The OTDR scan is initiated manually on the selected direction. If a scan is already in progress, wait for it to finish before restarting.

What to do next

- Review the OTDR scan results to verify fiber integrity or detect anomalies.
- If any issues are identified, take corrective action.

View the OTDR measurements

Use this procedure to view the OTDR scan measurement results.

Procedure

Use the command **show controllers ots** *R/S/I/P* **otdr-info** *direction* to view the OTDR scan measurements.

Example:

```
RP/0/RP0/CPU0:ios#show controllers ots 0/3/0/0 otdr-info rx
Tue Jan  7 04:37:46.711 UTC
Scan Direction: RX
Scan Status: Data Ready
Optical Return Loss: -90.6 dB
SOR file: /harddisk:/otdr/R1_OTDR_Ots0_3_0_0_RX_20250107-043559.sor
Total Events detected: 1
Scan Timestamp: Tue Jan  7 04:33:33 2025 UTC
Event Type Legend:  NR:Non-Reflective  R:Reflective  FE:Fiber-End  ER:Excess-Reflection
EA:Excess-Attenuation
Event#      |  Detected Event(s)       |  Location(m)     |  Accuracy(m)     |  Magnitude(dB)    |
Attenuation/km(dB)
1           |  NR FE                   |  11.9100         |  34.44           |  5.53             |
0.30
```

After you upgrade the FPD of the line card, you may not be able to view the previous OTDR scan results using the **show controllers ots** *Rack/Slot/Instance/Port* otdr-info *direction*. To access results from earlier OTDR scans, locate the .SOR files on the hard disk.

You can dynamically raise or clear Excessive Reflection (ER) and Excess Attenuation (EA) events and alarms by modifying their respective threshold values. In contrast, to raise or clear Fiber End (FE) and Reflectance (R) events, change the relevant thresholds and rerun the OTDR scan.

See OTDR scan status, on page 42 for a list of the different OTDR scan statuses and their definitions.

Stop the OTDR scan

Use this procedure to stop the OTDR scan manually.

Procedure

Enter the command **otdr-stop controller ots** *R/S/I/P direction* to stop the OTDR scan.

Example:

```
RP/0/RP0/CPU0:ios#otdr-stop controller ots 0/0/0/0 rx
Wed Feb  9 06:03:37.406 UTC
```

```
OTS OTDR Scan Stopped at RX
RP/0/RP0/CPU0:ios#
```

Automatic bidirectional OTDR scan

Table 18: Feature History

Feature Name	Release Information	Feature Description
Automatic OTDR scan	Cisco IOS XR Release 25.2.1	An OTDR scan is automatically triggered on both Rx and Tx directions, whenever events such as span fault, span restore, device power cycle, and line card cold reload occur. The automatic scan lets you quickly identify fiber failure type and fault location, while avoiding any collision during the bidirectional autoscan. Commands added to enable auto OTDR scan and view its results: • **otdr auto-scan {enable | disable}** • **show olc otdr-status [details]**

Automatic OTDR scan triggering events

The OTDR scan, starts automatically when events like span fault, span restoration, automatic OTDR scan enabling, device power cycling, and line card cold reload occur.

Autoscan direction and duration

The OTDR autoscan scans events in both Tx and Rx directions.

In both span up and span down events, the bidirectional OTDR scan process terminates after both Rx and Tx scans have been completed successfully. You can stop the scan sequence by disabling the autoscan feature.

The autoscan duration for Auto and Expert modes, the scan takes upto three minutes to complete. . During the autoscan, the OTDR-SCAN-IN-PROGRESS-RX and OTDR-SCAN-IN-PROGRESS-TX alarms are raised and get cleared once the scan is finished.

Autoscan behavior

The autoscan has these key behaviors:

- The autoscan reserves the span on the peer node and locks the OTDR resource to prevent manual triggering of a scan using the **otdr-start** command . However, if a manual scan is already in progress, the autoscan will wait until the manual scan is completed before proceeding.

- The **autoscan** terminates the ongoing scan and starts a new one if a change in **Span Status** is detected.

Span fault and restoration events detection

This table details how the span fault and span restore events are detected:

Table 19: Definition of span up and span down events

Events	Definition
Span Down	Raise of OSC-LOS and EDFA_RX_LOS alarms at the OSC controller
Span Up	Clearing of OSC-LOS and EDFA_RX_LOS alarms at the OSC controller

How the bidirectional autoscan works

This section explains how the bidirectional OTDR auto scan functions in the event of unidirectional and bidirectional fiber cuts, and during fiber restoration events.

Unidirectional and bidirectional fiber cuts

In a span including both broken and non-broken fibers, the scanning behavior differs based on the type of fiber cut:

- **Unidirectional Fiber Cut**:
  - The broken fiber is scanned in both the Rx and Tx directions by the Near End (NE) and Far End (FE) nodes.
  - The non-broken fiber is scanned only in the Tx direction.
- **Bidirectional Fiber Cut**:
  - Both fibers are scanned in both the Rx and Tx directions.

Span down event

For a bidirectional autoscan triggered by a span down event:

- Timeslots are used for both unidirectional and bidirectional fiber cuts as the node communication and hence negotiation is not possible.
- Timeslots are of equal duration and are alternately assigned to Rx and Tx directions. This order is consistent across both NE and FE node.
- If a scan cannot be completed inside the assigned timeslot or the scan execution failed for any reason, the execution is rescheduled at the next available timeslot for that port/direction.

Span up event

For a bidirectional autoscan triggered by a span up event:

- Rx and Tx scans are executed sequentially through negotiation with the remote node, eliminating the need for time slots.

  The OSC and associated Ethernet communication must be functioning properly to initiate the scan.

In both span up and span down events, the bidirectional OTDR scan process terminates after both Rx and Tx scans have been completed successfully. You can stop the scan sequence by disabling the autoscan feature.

Enable automatic OTDR scan

Follow these steps to enable OTDR scan to run automatically during certain events.

Procedure

Step 1 Enter the OTS controller configuration mode for the port you want to configure the automatic OTDR scan.

Example:

```
RP/0/RP0/CPU0:ios#configure
RP/0/RP0/CPU0:ios(config)#optical-line-control controller Ots 0/0/0/0
```

Step 2 Enable automatic OTDR scan.

Example:

```
RP/0/RP0/CPU0:ios(config-olc-ots)#otdr auto-scan enable
```

If you want to disable the automatic OTDR scan, use the **otdr auto-scan disable** command.

Step 3 Commit the changes and exit all the configuration modes.

Example:

```
RP/0/RP0/CPU0:ios(config)#commit
RP/0/RP0/CPU0:ios(config)#exit
```

Verify autoscan status

Use this task to verify the status of the autoscan.

Procedure

Use the command **show olc otdr-status [details]** to view the automatic OTDR scan results.

Example:

```
RP/0/RP0/CPU0:R1#show olc otdr-status
Tue Oct 10 20:15:57.359 UTC
```

```
Controller                : Ots0/0/0/0
OTDR Auto-scan Status     : RUNNING
Status Detail : Completed on Span Down.
Auto-scan Rx Start Time   : 2023-10-10 20:12:01
Rx Status Detail          : Completed on Span Down
Auto-scan Tx Start Time   : 2023-10-10 20:14:31
Tx Status Detail          : Waiting for OTDR Resource
Optical Span Status       : Up
Trigger Event             : Manual
Last Trigger Event        : Manual
```

See OTDR scan status, on page 42 for a list of the different OTDR scan statuses and their definitions.

OTDR scan status

This section describes and explains the various OTDR statuses that appear when using the **show olc controller ots R/S/I/P otdr-status** and **show controller ots R/S/I/P otdr-info** commands.

Table 20: OTDR scan status

Scan status	Description
Measuring	OTDR scan is currently in progress.
Data Processing	OTDR scan has completed, and the data is ready for review
Data Ready	OTDR scan is stopped by the user, when it is in progress.
Stopped	OTDR is processing data just before populating the event table.
Error	The OTDR status may occasionally enter an Error state for various unpredictable reasons. One possible cause is a timeout event, which occurs if the scan is not completed within five minutes. In such cases, no SOR files or event table is generated. It is important to note that this is a rare occurrence. You can still initiate the OTDR scan to obtain the scan results.
Waiting Span Reservation	Waiting for remote OTDR span reservation (a span reservation request has been sent but no answer is received yet or the remote node is busy). **Note** This status may be visible even during the non-negotiated OTDR scan that is initiated using the `force` option.
Timeout	The scan did not finish within the expected time.

Scan status	Description
Communication Failed or Communication Failed, retrying in less than x minutes	The system cannot reserve the span due to a link failure after a specified time. The scan will be retried after some time.
Local Resource Not Available	The local resource is busy after a specified time.
Span Reservation Failed or Span Reservation Failed, retrying in less than x minutes	The remote resource is busy after a specified time, and scan will be retried after sometime.
OTDR Resource Not Available, or OTDR Resource Not Available, retrying in less than x minutes	The local OTDR resource is busy, and scan will be retried after sometime.

This table explains the various OTDR scan statuses that are applicable for manual and autoscan.

Table 21: OTDR scan status applicable for manual and autoscan

Type of OTDR scan	Scan Status	
	show olc controller ots R/S/I/P otdr-status	**show controller ots R/S/I/P otdr-info**
Manual	NA	• Measuring • Data Processing • Data Ready • Stopped • Error • Waiting Span Reservation • Timeout • Communication Failed • Local Resource Not Available • Span Reservation Failed • Scan Not Allowed

Type of OTDR scan	Scan Status	
	show olc controller ots R/S/I/P otdr-status	show controller ots R/S/I/P otdr-info
Autoscan	• Measuring • Data Processing • Data Ready • Stopped • Error • OTDR Resource Not Available, or OTDR Resource Not Available, retrying in less than x minutes • Waiting Span Reservation • Timeout • Communication Failed or Communication Failed, retrying in less than x minutes • Local Resource Not Available • Span Reservation Failed or Span Reservation Failed, retrying in less than x minutes • Scan Not Allowed	• Measuring • Data Processing • Data Ready • Stopped • Error • Waiting Span Reservation

OTDR baseline

Table 22: Feature History Table

Feature Name	Release Information	Description
OTDR baseline	Cisco IOS XR Release 25.2.1	OTDR saves a baseline with the scan results the first time a link is up. This baseline captures essential data about the fiber characteristics at the time of initial installation. The baseline is used as a benchmark for future OTDR scans to identify changes or degradation in the optical fiber span, facilitating maintenance and troubleshooting efforts. It helps verify the integrity and performance of the optical network over time.

An OTDR baseline is the initial set of OTDR scan results that are saved as a reference point for evaluating the condition and performance of an optical fiber span over time. It captures essential data about the fiber characteristics at the time of initial installation or configuration, including:

- **SOR filename**: The filename of the SOR file that documents the scan results.
- **Optical Return Loss (ORL)**: Measurement of the reflected optical power, indicating the quality of the fiber connection.
- **Detected events**: Any anomalies, reflections, or changes detected during the scan, such as splices, bends, or breaks.
- **Scan timestamp**: The specific date and time when the baseline scan was performed.

You can find the OTDR baseline SOR files in the `/harddisk:/otdr/baseline` directory.

Purpose of the baseline

The baseline is used as a benchmark for future OTDR scans to identify changes or degradation in the optical fiber span, facilitating maintenance and troubleshooting efforts. It helps verify the integrity and performance of the optical network over time.

Baseline creation

- The OTDR baseline is saved after the automatic OTDR scan when the link is up for the first time.
- If the OTDR-ABS-REFLECTANCE-EXCEEDED-TX or OTDR-ABS-REFLECTANCE-EXCEEDED-RX alarms are active on a link, the OTDR baseline is not saved. In such cases, clear the alarm and save the baseline manually.

Baseline storage location

Save a new OTDR baseline

Set the current OTDR scan results as a baseline in these situations.

- The OTDR-ABS-REFLECTANCE-EXCEEDED alarm is active. The system did not save the baseline during the initial scan.
- OTDR scan status is:
  - **Unknown**
  - **Stopped**, or
  - **Error**
- If you upgrade or expand the network, you may need to save a new baseline.

You must run an OTDR scan again to save a new baseline.

Procedure

Step 1 Use the **otdr-start controller ots** *R/S/I/P* **rx|tx** command to start the OTDR scan manually

Example:

```
RP/0/RP0/CPU0:ios#otdr-start controller ots 0/0/0/0 rx
Wed Feb 9 05:49:39.178 UTC
OTS OTDR Scan Started at RX
```

Step 2 Use the **otdr save baseline controller ots** *R/S/I/P* **rx|tx** command to set the current OTDR scan results as the baseline.

Example:

```
RP/0/RP0/CPU0:ios#otdr save baseline controller ots 0/0/0/0 rx
```

Example:

This sample output is an example of a failure to save a baseline.

```
RP/0/RP0/CPU0:P2B_DT_04#otdr save baseline controller ots 0/0/0/0 tx
Thu Apr  3 17:38:02.833 +0530
'optics' detected the 'warning' condition 'OTDR baseline cannot be saved due to unavailability of
scan results'
```

The system saves the current OTDR scan as the new baseline. If scan results are unavailable, the system displays an error and the baseline is not saved.

View OTDR baseline

Follow this step to view the OTDR baseline.

Procedure

Enter the **show controller ots** *R/S/I/P* **otdr-info tx|rx baseline** command to view the OTDR baseline.

Example:

```
RP/0/RP0/CPU0:ios#show controller ots 0/1/0/0 otdr-info rx baseline
Mon May 19 16:27:41.912 IST

        Display Baseline Info:

        Scan Direction: RX

        Scan Status: Data Ready

        Optical Return Loss: 48.0 dB

        SOR file: /harddisk:/otdr/baseline/kepler-230-220_OTDR_Ots0_1_0_0_RX_20250319-093155.sor

        Total Events detected: 6

        Scan Timestamp: Wed Mar 19 09:29:19 2025 UTC

        Event Type Legend:  NR:Non-Reflective  R:Reflective  FE:Fiber-End  ER:Excess-Reflection
```

```
EA:Excess-Attenuation

        Event#      |  Detected Event(s)       |  Location(m)     |  Accuracy(m)     |  Magnitude(dB)
   |  Attenuation/km(dB)
        1           |  NR EA                   |  2106.8600       |  34.44           |  24.48
     |  0.00
        2           |  NR                      |  5250.7200       |  501.86          |  1.17
     |  0.14
        3           |  NR                      |  6416.0500       |  501.86          |  0.39
     |  0.30
        4           |  NR                      |  10208.9400      |  501.86          |  2.54
     |  0.00
        5           |  R FE                    |  22424.7200      |  1000.78         |  -26.08
     |  0.14
        6           |  NR FE                   |  22424.7200      |  4756.43         |  3.50
     |  0.14
```