Configuration Guide for Cisco NCS 1014, IOS XR Releases 25.x.x

Cisco Network Convergence System 1014
Release: 25.x.x | Updated October 7, 2026

Part I

Configure NCS 1014 Transponder Cards

Topics:

- Cisco NCS 1014 Advanced Multihaul Optical Platform - An Overview
- Configuring the Card Mode
- Configuring Controllers
- OTNSec Encryption on the NCS1K14-2.4T-K9 card
- Performance Monitoring
- Pseudo Random Binary Sequence
- Implementing Host Services and Applications
- AppSel Code Provisioning

1 Cisco NCS 1014 Advanced Multihaul Optical Platform - An Overview

Topics:

- Document objective
- Cisco NCS 1014 chassis and line cards

Explains the key features and capabilities of Cisco NCS 1014 Advanced Multihaul Optical Platforms.

This chapter provides an overview for Cisco NCS 1014 Advanced Multihaul Optical Platform.

Document objective

This document explains the primary objectives and scope of the Cisco NCS 1014 Configuration Guide.

The Cisco NCS 1014 Configuration Guide describes how to configure various card modes for the line cards that are supported in the Cisco NCS 1014 chassis.

Cisco NCS 1014 chassis and line cards

The Cisco NCS 1014 is an advanced multihaul optical platform supporting transponders and line system cards.

The Cisco NCS 1014 chassis is an advanced multihaul optical platform that supports transponders and line system cards.

- It is a 2RU chassis,
- delivers a universal transponder solution, and
- provides excellent performance for metro, long-haul, and submarine applications.

Cisco NCS 1014 modules and supported line cards

The NCS 1014 chassis includes these modules:

- Removable controller
- Removable backup solid state drive (SSD)
- Two replaceable power supply units (PSU)
- Three replaceable fan modules
- Four line cards

The NCS 1014 chassis supports these line cards and modules:

Table 1: NCS 1014 supported line cards and modules

From release	PID	Description
7.11.1	NCS1K14-2.4T-K9	2.4T DWDM transponder card
	NCS1K14-CCMD-16-C/L	16-port colorless multiplexer and demultiplexer optical line card.
	NCS1K4-1.2T-K9	1.2T DWDM transponder card
24.1.1	NCS1K14-2.4T-X-K9	2.4T-X DWDM transponder and muxponder card
	NCS1K4-QXP-K9	3.2T QXP transponder card
25.2.1	NCS1K4-2-QDD-C-K9	2-QDD-C C-band line card

1.2T line cards

This section explains the purpose and features of 1.2T DWDM line cards for Cisco NCS 1014 chassis, including their high-capacity optical transport and encryption capabilities.

A 1.2T DWDM line card is a transponder that

- enables high-capacity optical transport for Cisco NCS 1014 chassis,
- secures client-side data with AES256-based Layer-1 encryption, and
- delivers flexible client and trunk configurations for 100GE and OTU4 traffic.

Key features

The NCS1K4-1.2T-K9 line card is a single-slot unit.

- It provides 12 client ports for 100GE and OTU4 traffic and two trunks, which can be configured anywhere from 100G to 600G in 50G steps.
- It supports C-band traffic.

2.4T line cards

This section explains the capabilities and features of 2.4T line cards used in the Cisco NCS 1014 chassis.

A 2.4T line card is a coherent optics transponder and muxponder that

- fits a single slot on the Cisco NCS 1014 chassis,
- supports C-band traffic at trunk ports, and
- delivers 400GE, 100GE, and OTU4 client traffic over two trunk ports operating at speeds from 400G to 1.2T each.

CCMD-16 line cards

The CCMD-16 optical line card is a 16-port colorless multiplexer and demultiplexer (CCMD) card available in C-band and L-band variants, designed for add/drop functionality in optical networks.

The CCMD-16 optical line card is a type of optical line card designed for multiplexing and demultiplexing functions in an optical network.

- It features two line ports to transmit and receive using the same LC connectors,
- includes 16 ports for add/drop functionality with LC connector-based interfaces, and
- is available in two variants: NCS1K14-CCMD-16-C (C-band) and NCS1K14-CCMD-16-L (L-band).

CCMD-16 optical line card variants and specifications

The CCMD-16 optical line card is available in two main variants, each supporting different wavelength bands:

- **NCS1K14-CCMD-16-C:** This is a C-band, 16-port Colorless Direct attach optical line card with EDFA. It can host up to 16 channels and supports any signal distribution between 191250 and 196200 GHz, for example, a 64-channel grid with 75-GHz spacing.
- **NCS1K14-CCMD-16-L:** This is an L-band, 16-port Colorless Direct attach optical line card with EDFA. It can host up to 16 channels and supports any signal distribution between 186025 and 191000 GHz, for example, a 64-channel grid with 75-GHz spacing.

2.4TX line cards

The 2.4TX line card (NCS1K14-2.4T-X-K9) is a single-slot coherent optics Transponder and Muxponder for the Cisco NCS 1014 chassis, delivering 400GE and 100GE/OTU4 clients over two C-band trunks from 400G to 1.2T each, and operating in Muxponder or Muxponder Slice modes.

The 2.4TX line card (NCS1K14-2.4T-X-K9) is a coherent optics Transponder and Muxponder for the Cisco NCS 1014 chassis.

- It is a single-slot card that supports C-band traffic at trunk ports,
- delivers 400GE and 100GE client traffic over two trunk ports operating at speeds ranging from 400G to 1.2T each, and
- operates in two configurable card modes: Muxponder mode and Muxponder Slice mode.

Table 2: Feature History

Feature Name	Release Information	Feature Description
NCS1K14-2.4T-X-K9 Line Card	Cisco IOS XR Release 24.1.1	The new NCS1K14-2.4T-X-K9 line card is a single-slot Transponder and Muxponder card that delivers up to 1.2T C-band traffic at each trunk port. It has six QDD client ports that support 400GE and 4x100GE traffic on each port. This card provides two trunk ports that support 1.2T traffic on each port. The mxponder-slice and muxponder keywords in the **hw-module** command enable this card to operate in the following modes. • **Muxponder slice mode:**The card virtually splits into two slices in this mode. It is possible to configure both trunks to carry different data rates. The supported trunk rates are 400G, 500G, 600G, 800G, 1000G, and 1200G. • **Muxponder mode:**The card acts as one unit in this mode, configuring both trunks to the same data rate. The supported trunk rates are 600G and 1000G. Additionally, the capacity of a specific shared client port is consumed by two trunk ports.

2.4TX line card features and specifications

The card's operation modes are enabled using the `mxponder-slice` and `muxponder` keywords in the `hw-module` command:

- **Muxponder slice mode:** The card virtually splits into two slices, allowing both trunks to carry different data rates. Supported trunk rates are 400G, 500G, 600G, 800G, 1000G, and 1200G.
- **Muxponder mode:**The card acts as one unit, configuring both trunks to the same data rate. Supported trunk rates are 600G and 1000G. Additionally, the capacity of a specific shared client port is consumed by two trunk ports.

> **Note**
>
> In Release 24.1.1, the 2.4TX line card supports only 400G, 500G, 600G, 800G, 1000G, and 1200G trunk payloads.

The 2.4TX card supports various pluggable form factors and data rates for its client and trunk ports, as detailed in this table:

Table 3: Interfaces and data rates

Interfaces	Form factor	Ports	Data rates
Client	QSFP-DD56	1, 2, 3, 4, 5, 6	400G
	QSFP-DD112	2, 5	400, 800G
Trunk	Coherent Interface Module 8 (CIM8)	0, 7	up to 1.2T in each port

> **Note**
>
> In Release 24.1.1, ports 2 and 5 support only up to 400G data rates.

The 2.4TX card has two trunk ports and six client ports, as shown in the this figure:

Figure 1: 2.4TX Line card front view

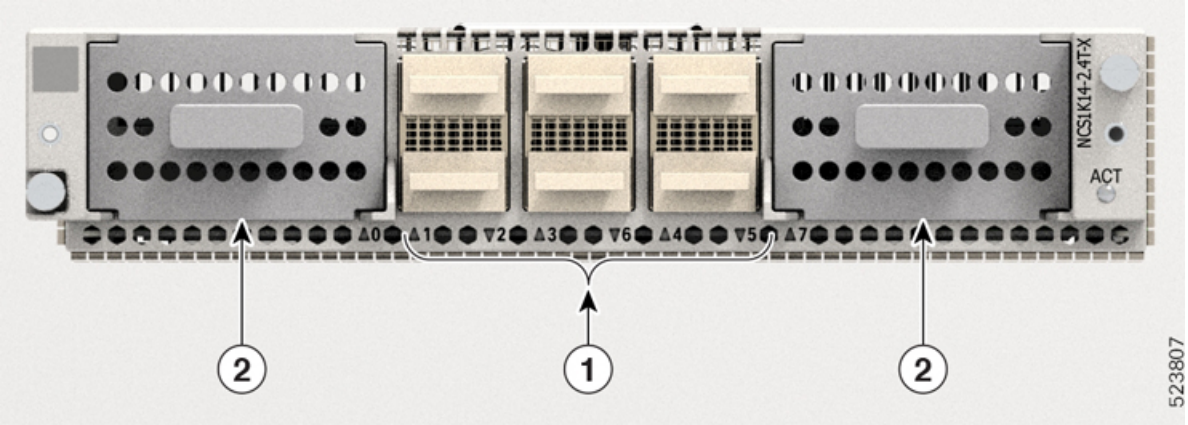

Table 4: 2.4TX line card interfaces

Callout	Interface
1	Client port
2	Trunk port

This figure illustrates the mapping between the client and trunk ports:

Figure 2: 2.4TX card client and trunk mapping

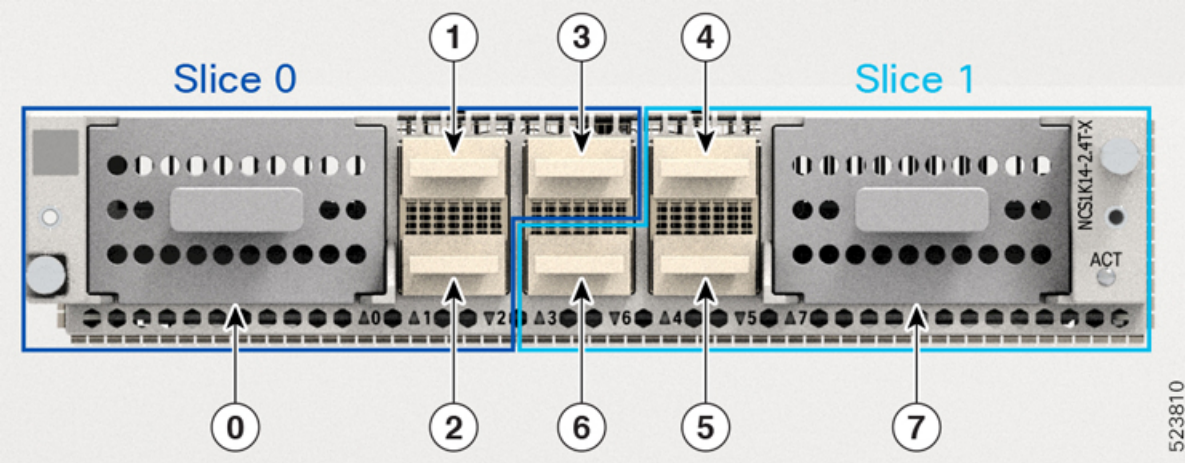

Table 5: Client-to-trunk port mapping

Trunk port	Client ports
0	1, 2, 3
7	4, 5, 6

> **Note**
>
> This client-to-trunk port mapping is only applicable for the mxponder-slice mode.

For more information about the 2.4TX card, refer to the datasheet.

QXP-K9 line cards

The QXP-K9 line card is a high-density, single-slot QSFP-DD transponder supporting 3.2T traffic with eight client ports (QSFP-DD) and eight trunk ports (QSFP-DD ZR+).

A QXP-K9 line card is a high-density QSFP-DD transponder card that

- provides eight client ports (QSFP-DD) and eight trunk ports (QSFP-DD ZR+),
- supports up to 3.2T traffic through its eight QSFP-DD trunk ports, and
- operates each trunk port at speeds up to 400G in 50G increments.

QXP-K9 line card port capabilities

- **Client ports:** Eight QSFP-DD client ports. Each client port supports 400GE, 4x100GE, and 100GE without FEC client rates.
- **Trunk ports:** Eight QSFP-DD ZR+ trunk ports. Each trunk port operates at speeds up to 400G, configurable in 50G increments, contributing to the card's 3.2T total traffic capacity.

NCS1K4-2-QDD-C-K9 C-band line cards

This section explains the main attributes and features of NCS1K4-2-QDD-C-K9 C-band line cards for optical networking.

The NCS1K4-2-QDD-C-K9 C-band line card is supported by the Cisco NCS 1014 from Release 25.2.1. It is a high-performance optical networking card that:

- offers configurable client and trunk ports,
- features eight client ports (QSFP28 and QSFP-DD) and two DWDM dual sub-channel module trunk ports, and
- supports trunk port line rates of 200, 300, and 400 Gbps with fine control over modulation format, baud rate, and forward error correction (FEC).

Key features of the 2-QDD-C line cards

- **Client ports:** supports up to eight 100GE or two 400GE client ports.
- **Trunk line rate:** configurable between 200G and 400G in 100G increments.
- **Client-to-Trunk mapping:** based on the type of configuration and the line rate.
- **Modulation format:** supports QPSK, 8 QAM, 16 QAM, and hybrid modulation formats. Hybrid modulation formats can be configured with 1/128 bits/symbol granularity.
- **Forward Error Correction (FEC):** soft Decision FEC 27% and Soft Decision FEC 15%.
- **Baud rate:** configurable between 28 Gbd/s and 72 Gbd/s.
- **Frequency range:** covers 191.25 to 196.1 THz with a default value of 193.1 THz.
- **Support optics for 400GE client ports:** includes FR4 and AOC.

2 Configuring the Card Mode

Topics:

- 1.2T line cards
- QXP cards
- 2-QDD-C line cards
- 2.4T and 2.4TX card modes
- Reset client optics remotely

This section explains the different supported configurations and describes how card mode is configured on line cards.

This chapter lists the supported configurations and the procedures to configure the card mode on the line cards.

Note

Unless otherwise specified, “line cards” refers to 1.2T and 1.2TL line cards.

1.2T line cards

This section explains the features, configurations, and port assignments of 1.2T line cards.

This section describes the supported card modes, card configurations, and procedures to configure the card modes on the 1.2T line card.

A 1.2T line card

- supports both module and slice configurations,
- provides flexible trunk and client port assignment.

Port details:

The line cards are equipped with trunk and client ports:

- Two trunk ports (0 and 1), and
- 12 client ports (2 through 13).

Configuration modes

You can configure the line cards in these two modes:

- **Muxponder mode:** both trunk ports are configured with the same trunk rate. The client-to-trunk mapping is sequential.
- **Muxponder slice mode**: the client-to-trunk mapping is fixed.

This table lists the client ports assigned to each trunk for the 1.2T card in muxponder slice mode.

Table 6: Client-to-trunk mapping for muxponder slice mode

Card	Trunk 0 client ports	Trunk 1 client ports
1.2T	2 to 7	8 to 13

Supported data rates on the 1.2T line card

This section provides details about supported data rates, port configurations, parameter ranges, and restrictions for the Cisco 1.2T line card. Includes tables for muxponder and split client port mapping modes, as well as configuration notes and coupled mode restrictions.

The 1.2T line card supports these data rates.

This table shows the client and trunk ports that are enabled on these muxponders for the 100GE and OTU4 data rates.

- Muxponder
- Muxponder slice 0
- Muxponder slice 1

Table 7: Data rates for muxponder and muxponder slice 0 and slice 1 mode configuration

Trunk data rate	Client data rate (100GE, OTU4)	Muxponder mode		Muxponder slice mode	
		Trunk ports	Client ports	Client ports for trunk 1	Client ports for trunk 0
100	100GE, OTU4	0	2	8	2
200	100GE, OTU4	0, 1	2, 3, 4, 5	8, 9	2, 3
300	100GE, OTU4	0, 1	2, 3, 4, 5, 6, 7	8, 9, 10	2, 3, 4
400	100GE, OTU4	0, 1	2, 3, 4, 5, 6, 7, 8, 9	8, 9, 10, 11	2, 3, 4, 5
500	100GE, OTU4	0, 1	2, 3, 4, 5, 6, 7, 8, 9, 10, 11	8, 9, 10, 11, 12	2, 3, 4, 5, 6
600	100GE, OTU4	0, 1	2, 3, 4, 5, 6, 7, 8, 9, 10, 11, 12, 13	8, 9, 10, 11, 12, 13	2, 3, 4, 5, 6, 7

All configurations can be accomplished by using appropriate values for client bitrate and trunk bitrate parameters of the **hw-module** command.

This table shows the trunk parameter ranges for the 1.2T line card.

Table 8: Trunk parameter range for the 1.2T line card

Trunk payload	FEC	Min BPS	Max BPS	Min GBd	Max GBd
50G	15%	1	1.3125	24.0207911	31.5272884
50G	27%	1	1.4453125	24.0207911	34.7175497
100G	15%	1	2.625	24.0207911	63.0545768
100G	27%	1	2.890625	24.0207911	69.4350994
150G	15%	1.3203125	3.9375	24.0207911	71.6359689
150G	27%	1.453125	4.3359375	24.0207911	71.6749413
200G	15%	1.7578125	5.25	24.0207911	71.7420962
200G	27%	2	4.40625	31.51	69.43
250G	15%	2.1953125	6	26.2727403	71.8059237
250G	27%	2.4140625	6	28.9312914	71.9068991
300G	15%	2.6328125	6	31.5272884	71.8485385
300G	27%	2.8984375	6	34.7175497	71.8681352
350G	15%	3.0703125	6	36.7818364	71.8790086
350G	27%	3.3828125	6	40.503808	71.8404724

Trunk payload	FEC	Min BPS	Max BPS	Min GBd	Max GBd
400G	15%	3.5078125	6	42.0363845	71.9018782
400G	27%	3.8671875	6	46.2900663	71.8197392
450G	15%	3.9453125	6	47.2909326	71.9196757
450G	27%	4.34375	6	52.0763245	71.9327648
500G	15%	4.3828125	6	52.5454806	71.93392
500G	27%	4.8281250	6	57.8625828	71.9068991
550G	15%	4.8203125	6	57.8000287	71.9455787
550G	27%	5.3125	6	63.6488411	71.88575
600G	15%	5.2578125	-	-	71.9552971

Trunk Payload	FEC	Min BPS	Max BPS	Min GBd	Max GBd
100G	15%	1	2.625	24.0207911	63.0545768
100G	27%	1	2.890625	24.0207911	69.4350994
150G	15%	1.3203125	3.9375	24.0207911	71.6359689
150G	27%	1.453125	4.3359375	24.0207911	71.6749413
200G	15%	2	4	31.5272884	63.0545768
200G	27%	2	4.40625	31.51664088	69.43509943
250G	15%	2.1953125	4.5	35.0303204	71.8059237
250G	27%	2.4140625	4.5	38.5750552	71.9068991
300G	15%	2.6328125	4.5	42.0363845	71.8485385
300G	27%	2.8984375	4.5	46.2900662857142	71.86813526
350G	15%	3.0703125	4.5	49.0424486	71.8790086
350G	27%	3.3828125	4.5	54.0050773	71.8404724
400G	15%	3.5078125	4.5	56.0485127	71.9018782
400G	27%	3.8671875	4.5	61.72008838	71.81973921

You can configure the sub 50G or coupled mode on the 1.2T line card only in the muxponder mode.

This table shows the port configuration for the supported data rates in the muxponder mode.

Table 9: Supported data rates for muxponder mode

Trunk data rate (per trunk)	Total configured data rate	Trunk ports	Client ports for trunk 0 (100G)	Shared client port (50G per trunk)	Client ports for trunk 1 (100G)
50G	100G	0, 1	-	2	-
150G	300G	0, 1	2	3	4
350G	700G	0, 1	2, 3, 4	5	6, 7, 8
450G	900G	0, 1	2, 3, 4, 5	6	7, 8, 9, 10
550G	1.1T	0, 1	2, 3, 4, 5, 6	7	8, 9, 10, 11, 12

The 1.2T line card supports an alternate port configuration for Sub 50G (split client port mapping) that you can configure using CLI.

This table shows the port configuration for the supported data rates in the split client port mapping mode.

Table 10: Supported data rates for split client port mapping mode

Trunk data rate (per trunk)	Total configured data rate	Trunk ports	Client ports for trunk 0 (100G)	Shared client port (50G per trunk)	Client ports for trunk 1 (100G)
50G	100G	0, 1	-	7	-
150G	300G	0, 1	2	7	8
250G	500G	0, 1	2, 3	7	8, 9
350G	700G	0, 1	2, 3, 4	7	8, 9, 10
450G	900G	0, 1	2, 3, 4, 5	7	8, 9, 10, 11
550G	1.1T	0, 1	2, 3, 4, 5, 6	7	8, 9, 10, 11, 12

Note

In all x50G configurations, client traffic on the middle port is affected with ODUK-BDI and LF alarms after the **power cycle or link flap** on the trunk side. This issue is raised when the two network lanes work in coupled mode and move from low to high power. To solve this issue, create a new frame either at the near-end or far-end by performing **shut** or **no shut** of the trunk ports.

Coupled mode restrictions

These restrictions apply to the coupled mode configuration:

- Both trunk ports must be configured with the same bits-per-symbol or baud rate. Both must be sent over the same fiber and direction.
- The chromatic dispersion must be configured to the same value for both trunk ports.

- When trunk internal loopback is configured, you must configure it on both trunk ports. If you configure internal loopback only on one trunk, traffic loss occurs.
- Fault on a trunk port of a coupled pair may cause errors on all clients including those running only on the unaffected trunk port.

Configure split client port mapping

Use this procedure to configure or remove split client port mapping mode on a trunk port for sub 50G data rates, and verify the configuration.

Use this task to configure the trunk port to client port mapping for sub 50G data ratesin the default mode or in the split client port mapping mode.

Before you begin

Procedure

1. Perform any of these steps to configure or remove the split client port mapping mode:
   - To configure the trunk port to client port mapping for sub 50G configuration in the split client port mapping mode, run the **split-client-port-mapping** command.

     Example:

     ```
     RP/0/RP0/CPU0:ios#configure
     RP/0/RP0/CPU0:ios(config)#hw-module location 0/1/NXR0 mxponder
     RP/0/RP0/CPU0:ios(config-hwmod-mxp)#split-client-port-mapping
     RP/0/RP0/CPU0:ios(config-hwmod-mxp)#commit
     RP/0/RP0/CPU0:ios(config-hwmod-mxp)#end
     ```

   - To remove the split client port-mapping configuration, run the **no split-client-port-mapping** command.

     Example:

     ```
     RP/0/RP0/CPU0:ios#configure
     RP/0/RP0/CPU0:ios(config)#hw-module location 0/1/NXR0 mxponder
     RP/0/RP0/CPU0:ios(config-hwmod-mxp)#no split-client-port-mapping
     RP/0/RP0/CPU0:ios(config-hwmod-mxp)#commit
     RP/0/RP0/CPU0:ios(config-hwmod-mxp)#end
     ```

2. Run the **commit** command to apply the changes.

   Example

   ```
   RP/0/RP0/CPU0:ios(config-hwmod-mxp)#commit
   RP/0/RP0/CPU0:ios(config-hwmod-mxp)#end
   ```

3. Verify the port mapping using the **show hw-module location** *location* **mxponder** command.

Example

This example shows how to verify the split client port-mapping configuration.

```
RP/0/RP0/CPU0:ios#show hw-module location 0/1/NXR0 mxponder
Location:             0/1/NXR0
Client Bitrate:       100GE
Trunk  Bitrate:       450G
Status:               Provisioning In Progress
LLDP Drop Enabled:    FALSE
ARP Snoop Enabled:    FALSE
Client Port                     Mapper/Trunk Port         CoherentDSP0/1/0/0
   CoherentDSP0/1/0/1
Traffic Split Percentage
HundredGigECtrlr0/1/0/2         ODU40/1/0/0/1                        100
                     0
HundredGigECtrlr0/1/0/3         ODU40/1/0/0/2                        100
                     0
HundredGigECtrlr0/1/0/4         ODU40/1/0/0/3                        100
                     0
HundredGigECtrlr0/1/0/5         ODU40/1/0/0/4                        100
                     0
HundredGigECtrlr0/1/0/7         ODU40/1/0/0/5                         50
                    50
HundredGigECtrlr0/1/0/8         ODU40/1/0/1/1                          0
                   100
HundredGigECtrlr0/1/0/9         ODU40/1/0/1/2                          0
                   100
HundredGigECtrlr0/1/0/10        ODU40/1/0/1/3                          0
                   100
HundredGigECtrlr0/1/0/11        ODU40/1/0/1/4                          0
                   100
```

The split client port mapping is configured.

This is a sample in which split-client-port-mapping is configured with a 450G trunk payload.

```
RP/0/RP0/CPU0:ios#configure
RP/0/RP0/CPU0:ios(config)#hw-module location 0/1/NXR0 mxponder
RP/0/RP0/CPU0:ios(config-hwmod-mxp)#split-client-port-mapping
RP/0/RP0/CPU0:ios(config-hwmod-mxp)#commit
RP/0/RP0/CPU0:ios(config-hwmod-mxp)#end
```

This is a sample in which split-client-port-mapping is removed.

```
RP/0/RP0/CPU0:ios#configur
RP/0/RP0/CPU0:ios(config)#hw-module location 0/1/NXR0 mxponder
RP/0/RP0/CPU0:ios(config-hwmod-mxp)#no split-client-port-mapping
RP/0/RP0/CPU0:ios(config-hwmod-mxp)#commit
RP/0/RP0/CPU0:ios(config-hwmod-mxp)#end
```

Configure the card mode

Use this procedure to configure the 1.2T line card in either muxponder or muxponder slice modes by specifying client and trunk data rates.

Use this task to configure the 1.2T line card in the module (muxponder) or slice configuration (muxponder slice), specifying its client and trunk data rates.

Procedure

1. Configure the client and trunk rates for the muxponder at the specified location.
   - **hw-module location** *location* **mxponder client-rate {100GE | OTU4}**
   - **hw-module location** *location* **mxponder trunk-rate** {**50G | 100G150G | 200G | 250G | 300G | 350G | 400G | 450G | 500G | 550G | 600G** }

   Example

   This is a sample in which the card is configured in the muxponder mode with a 550G trunk payload.

```
RP/0/RP0/CPU0:ios#config
Tue Oct 15 01:24:56.355 UTC
RP/0/RP0/CPU0:ios(config)#hw-module location 0/1/NXR0 mxponder client-rate
100GE
RP/0/RP0/CPU0:ios(config)#hw-module location 0/1/NXR0 mxponder trunk-rate
550G
RP/0/RP0/CPU0:ios(config)#commit
```

   This is a sample in which the card is configured in the muxponder mode with a 500G trunk payload.

```
RP/0/RP0/CPU0:ios#config
Sun Feb 24 14:09:33.989 UTC
RP/0/RP0/CPU0:ios(config)#hw-module location 0/2/NXR0 mxponder client-rate
OTU4
RP/0/RP0/CPU0:ios(config)#hw-module location 0/2/NXR0 mxponder trunk-rate
500G
RP/0/RP0/CPU0:ios(config)#commit
```

2. Use these commad to configure the client data rates and trunk data rates of the card in the muxponder slice mode.
   - **configure hw-module location** *location* **mxponder-slice** *mxponder-slice-number* **client-rate { 100GE|OTU4}**
   - **hw-module location** *location* **mxponder-slice trunk-rate** { **100G | 200G | 300G | 400G | 500G | 600G** }

   Example

   This is a sample in which the card is configured in the muxponder mode with a 550G trunk payload.

```
RP/0/RP0/CPU0:ios#config
Tue Oct 15 01:24:56.355 UTC
RP/0/RP0/CPU0:ios(config)#hw-module location 0/1/NXR0 mxponder client-rate
100GE
RP/0/RP0/CPU0:ios(config)#hw-module location 0/1/NXR0 mxponder trunk-rate
550G
RP/0/RP0/CPU0:ios(config)#commit
```

This is a sample in which the card is configured in the muxponder mode with a 500G trunk payload.

```
RP/0/RP0/CPU0:ios#config
Sun Feb 24 14:09:33.989 UTC
RP/0/RP0/CPU0:ios(config)#hw-module location 0/2/NXR0 mxponder client-rate
OTU4
RP/0/RP0/CPU0:ios(config)#hw-module location 0/2/NXR0 mxponder trunk-rate
500G
RP/0/RP0/CPU0:ios(config)#commit
```

This is a sample in which the card is configured in the muxponder slice 0 mode with a 500G trunk payload.

```
RP/0/RP0/CPU0:ios#config
RP/0/RP0/CPU0:ios(config)#hw-module location 0/1/NXR0 mxponder-slice 0
client-rate 100GE
RP/0/RP0/CPU0:ios(config)#hw-module location 0/1/NXR0 mxponder-slice 0
trunk-rate 500G
RP/0/RP0/CPU0:ios(config)#commit
```

This is a sample in which the card is configured in the muxponder slice 1 mode with a 400G trunk payload.

```
RP/0/RP0/CPU0:ios#config
RP/0/RP0/CPU0:ios(config)#hw-module location 0/1/NXR0 mxponder-slice 1
client-rate 100GE
RP/0/RP0/CPU0:ios(config)#hw-module location 0/1/NXR0 mxponder-slice 1
trunk-rate 400G
RP/0/RP0/CPU0:ios(config)#commit
```

This is a sample in which the card is configured with mixed client rates in the muxponder slice mode.

```
RP/0/RP0/CPU0:ios#configure
Mon Mar 23 06:10:22.227 UTC
RP/0/RP0/CPU0:ios(config)#hw-module location 0/1/NXR0 mxponder-slice 0
client-rate OTU4 trunk-rate 500G
RP/0/RP0/CPU0:ios(config)#hw-module location 0/1/NXR0 mxponder-slice 1
client-rate 100GE trunk-rate 500G
RP/0/RP0/CPU0:ios(config)#commit
```

Verify the 1.2T line card configuration

Use this procedure to verify the configured settings of the 1.2T line card in both muxponder and muxponder slice modes.

Use this task to verify the configured settings of the 1.2T line card in either muxponder or muxponder slice mode.

Procedure

Use the **show hw-module location** *<location>* **mxponder** command to verify the card configuration.

Example

```
RP/0/RP0/CPU0:ios#show hw-module location 0/2/NXR0 mxponder
Fri Mar 15 11:48:48.344 IST
```

```
Location:             0/2/NXR0
Client Bitrate:       100GE
Trunk  Bitrate:       500G
Status:               Provisioned
LLDP Drop Enabled:    FALSE
Client Port            Mapper/Trunk Port   CoherentDSP0/2/0/0
CoherentDSP0/2/0/1
                     Traffic Split Percentage

HundredGigECtrlr0/2/0/2  ODU40/2/0/0/1                100                   0
HundredGigECtrlr0/2/0/3  ODU40/2/0/0/2                100                   0
HundredGigECtrlr0/2/0/4  ODU40/2/0/0/3                100                   0
HundredGigECtrlr0/2/0/5  ODU40/2/0/0/4                100                   0
HundredGigECtrlr0/2/0/6  ODU40/2/0/0/5                100                   0
HundredGigECtrlr0/2/0/7  ODU40/2/0/1/1                  0                 100
HundredGigECtrlr0/2/0/8  ODU40/2/0/1/2                  0                 100
HundredGigECtrlr0/2/0/9  ODU40/2/0/1/3                  0                 100
HundredGigECtrlr0/2/0/10 ODU40/2/0/1/4                  0                 100
HundredGigECtrlr0/2/0/11 ODU40/2/0/1/5                  0                 100
```

This is a sample output of the coupled mode configuration where the shared client port is highlighted.

```
RP/0/RP0/CPU0:ios#show hw-module location 0/1/NXR0 mxponder
Tue Oct 15 01:25:57.358 UTC

Location:             0/1/NXR0
Client Bitrate:       100GE
Trunk  Bitrate:       550G
Status:               Provisioned
LLDP Drop Enabled:    FALSE
Client Port          Mapper/Trunk Port   CoherentDSP0/1/0/0 CoherentDSP0/1/0/1

                    Traffic Split Percentage

HundredGigECtrlr0/1/0/2    ODU40/1/0/0/1             100                   0
HundredGigECtrlr0/1/0/3    ODU40/1/0/0/2             100                   0
HundredGigECtrlr0/1/0/4    ODU40/1/0/0/3             100                   0
HundredGigECtrlr0/1/0/5    ODU40/1/0/0/4             100                   0
HundredGigECtrlr0/1/0/6    ODU40/1/0/0/5             100                   0
HundredGigECtrlr0/1/0/7    ODU40/1/0/0/6              50                  50
HundredGigECtrlr0/1/0/8    ODU40/1/0/1/1               0                 100
HundredGigECtrlr0/1/0/9    ODU40/1/0/1/2               0                 100
HundredGigECtrlr0/1/0/10   ODU40/1/0/1/3               0                 100
HundredGigECtrlr0/1/0/11   ODU40/1/0/1/4               0                 100
HundredGigECtrlr0/1/0/12   ODU40/1/0/1/5               0                 100
```

This is a sample output of all the muxponder slice 0 configurations.

```
RP/0/RP0/CPU0:ios#show hw-module location 0/1/NXR0 mxponder-slice  0
Fri Mar 15 06:04:18.348 UTC

Location:             0/1/NXR0
Slice ID:             0
Client Bitrate:       100GE
Trunk  Bitrate:       500G
Status:               Provisioned
LLDP Drop Enabled:    FALSE
Client Port                     Mapper/Trunk Port          CoherentDSP0/1/0/0

                                Traffic Split Percentage
```

```
HundredGigECtrlr0/1/0/2         ODU40/1/0/0/1                      100
HundredGigECtrlr0/1/0/3         ODU40/1/0/0/2                      100
HundredGigECtrlr0/1/0/4         ODU40/1/0/0/3                      100
HundredGigECtrlr0/1/0/5         ODU40/1/0/0/4                      100
HundredGigECtrlr0/1/0/6         ODU40/1/0/0/5                      100
```

This is a sample output of all the muxponder slice 1 configurations.

```
RP/0/RP0/CPU0:ios#show hw-module location 0/1/NXR0 mxponder-slice 1
Fri Mar 15 06:11:50.020 UTC

Location:             0/1/NXR0
Slice ID:             1
Client Bitrate:       100GE
Trunk  Bitrate:       400G
Status:               Provisioned
LLDP Drop Enabled:    TRUE
Client Port                     Mapper/Trunk Port          CoherentDSP0/1/0/1

                                Traffic Split Percentage

HundredGigECtrlr0/1/0/8         ODU40/1/0/1/1                      100
HundredGigECtrlr0/1/0/9         ODU40/1/0/1/2                      100
HundredGigECtrlr0/1/0/10        ODU40/1/0/1/3                      100
HundredGigECtrlr0/1/0/11        ODU40/1/0/1/4                      100
```

This is a sample output of the muxponder slice 1 configuration with client configured as OTU4.

```
RP/0/RP0/CPU0:ios#sh hw-module location 0/0/NXR0 mxponder-slice 1

Wed Mar 11 13:59:11.073 UTC

Location:             0/0/NXR0
Slice ID:             1
Client Bitrate:       OTU4
Trunk  Bitrate:       200G
Status:               Provisioned
Client Port                     Peer/Trunk Port            CoherentDSP0/0/0/1

                              Traffic Split Percentage
OTU40/0/0/8                     ODU40/0/0/1/1                      100
OTU40/0/0/9                     ODU40/0/0/1/2                      100
```

This is a sample to verify the mixed client rate configuration in the muxponder slice mode.

```
RP/0/RP0/CPU0:ios#show hw-module location 0/1/NXR0 mxponder
Mon Mar 23 06:20:22.227 UTC

Location:             0/1/NXR0
Slice ID:             0
Client Bitrate:       OTU4
Trunk  Bitrate:       500G
Status:               Provisioned
Client Port                     Peer/Trunk Port            CoherentDSP0/1/0/0

                                Traffic Split Percentage

OTU40/1/0/2                     ODU40/1/0/0/1                      100
```

```
OTU40/1/0/3                     ODU40/1/0/0/2                      100
OTU40/1/0/4                     ODU40/1/0/0/3                      100
OTU40/1/0/5                     ODU40/1/0/0/4                      100
OTU40/1/0/6                     ODU40/1/0/0/5                      100


Location:             0/1/NXR0
Slice ID:             1
Client Bitrate:       100GE
Trunk  Bitrate:       500G
Status:               Provisioned
LLDP Drop Enabled:    FALSE
ARP Snoop Enabled:    FALSE
Client Port                     Mapper/Trunk Port          CoherentDSP0/1/0/1

                                Traffic Split Percentage

HundredGigECtrlr0/1/0/8         ODU40/1/0/1/1                         100
HundredGigECtrlr0/1/0/9         ODU40/1/0/1/2                         100
HundredGigECtrlr0/1/0/10        ODU40/1/0/1/3                         100
HundredGigECtrlr0/1/0/11        ODU40/1/0/1/4                         100
HundredGigECtrlr0/1/0/12        ODU40/1/0/1/5                         100
```

Clear alarm statistics

Use this procedure to configure the system to clear alarm statistics on the optics or coherent DSP controller using the appropriate command.

Use this task to clear alarm statistics on the optics or coherent DSP controller.

Procedure

Run the **clear counters controller** *controllertype R/S/I/P* command to clear alarm statistics on the optics or coherent DSP controller.

Example

This is a sample in which the alarm statistics are cleared on the coherent DSP controller.

```
RP/0/RP0/CPU0:ios#show controller coherentDSP 0/1/0/0
Tue Jun 11 05:15:12.540 UTC

Port                                          : CoherentDSP 0/1/0/0
Controller State                              : Up
Inherited Secondary State                     : Normal
Configured Secondary State                    : Normal
Derived State                                 : In Service
Loopback mode                                 : None
BER Thresholds                                : SF = 1.0E-5  SD = 1.0E-7
Performance Monitoring                        : Enable

Alarm Information:
LOS = 1 LOF = 1 LOM = 0
OOF = 1 OOM = 1 AIS = 0
IAE = 0 BIAE = 0        SF_BER = 0
SD_BER = 2      BDI = 2 TIM = 0
FECMISMATCH = 0 FEC-UNC = 0
```

```
Detected Alarms                                   : None

Bit Error Rate Information
PREFEC  BER                                       : 8.8E-03
POSTFEC BER                                       : 0.0E+00

TTI :
        Remote hostname                           : P2B8
        Remote interface                          : CoherentDSP 0/1/0/0
        Remote IP addr                            : 0.0.0.0

FEC mode                                          : Soft-Decision 15

AINS Soak                                         : None
AINS Timer                                        : 0h, 0m
AINS remaining time                               : 0 seconds
RP/0/RP0/CPU0:ios#clear counters controller coherentDSP 0/1/0/0
Tue Jun 11 05:17:07.271 UTC
All counters are cleared
RP/0/RP0/CPU0:ios#show controllers coherentDSP 0/1/0/1
Tue Jun 11 05:20:55.199 UTC

Port                                              : CoherentDSP 0/1/0/1
Controller State                                  : Up
Inherited Secondary State                         : Normal
Configured Secondary State                        : Normal
Derived State                                     : In Service
Loopback mode                                     : None
BER Thresholds                                    : SF = 1.0E-5  SD = 1.0E-7
Performance Monitoring                            : Enable

Alarm Information:
LOS = 0 LOF = 0 LOM = 0
OOF = 0 OOM = 0 AIS = 0
IAE = 0 BIAE = 0        SF_BER = 0
SD_BER = 0      BDI = 0 TIM = 0
FECMISMATCH = 0 FEC-UNC = 0
Detected Alarms                                   : None

Bit Error Rate Information
PREFEC  BER                                       : 1.2E-02
POSTFEC BER                                       : 0.0E+00

TTI :
        Remote hostname                           : P2B8
        Remote interface                          : CoherentDSP 0/1/0/1
        Remote IP addr                            : 0.0.0.0

FEC mode                                          : Soft-Decision 15

AINS Soak                                         : None
AINS Timer                                        : 0h, 0m
AINS remaining time                               : 0 seconds
```

Regeneration mode

This section describes how regeneration modes are used in optical transport networks to restore and extend optical signals.

In an optical transmission system, 3R regeneration helps extend the reach of the optical communication links by reamplifying, reshaping, and retiming the data pulses.

Regeneration helps to correct any distortion of optical signals by converting it to an electrical signal, processing that electrical signal, and then retransmitting it again as an optical signal.

In Regeneration (Regen) mode, the OTN signal is received on a trunk port and the regenerated OTN signal is sent on the other trunk port of the 1.2T line card and the other way round. In this mode, only the trunk optics controller and coherentDSP controllers are created.

Regeneration can be configured only on the 1.2T line card.

Configure the card in Regen mode

Use this procedure to configure a 1.2T line card to operate in regeneration mode to support trunk rates from 100G to 600G.

Use this task to configure the regeneration mode on the 1.2T line card. The supported trunk rates are 100G to 600G in multiples of 100G.

Procedure

1. Run the **hw-module location** *location* **regen trunk-rate** command to configure the regeneration mode on the 1.2T card.

   Example

   The is a sample to configure the regeneration mode on the 1.2T line card with the trunk-rate 300.

```
RP/0/RP0/CPU0:ios#configure
RP/0/RP0/CPU0:ios(config)#hw-module location 0/0/NXR0
RP/0/RP0/CPU0:ios(config-hwmod)#regen
RP/0/RP0/CPU0:ios(config-regen)#trunk-rate 300
```

2. Commit and exit the configuration.

   Example

```
RP/0/RP0/CPU0:ios(config-regen)#commit
RP/0/RP0/CPU0:ios(config-regen)#exit
```

Verify the Regen mode

Use this procedure to verify the Regen mode configuration on your device to ensure correct signal regeneration settings.

Use this task to verify the regeneration mode configuration.

Procedure

Run the **show hw-module location** *location* **regen** command to verify the regen mode.

Example

```
RP/0/RP0/CPU0:ios#show hw-module location 0/0 regen
Mon Mar 25 09:50:42.936 UTC
Location:             0/0/NXR0
Trunk  Bitrate:       400G
Status:               Provisioned
East Port              West Port
CoherentDSP0/0/0/0      CoherentDSP0/0/0/1
```

The terms, **East Port** and **West Port** are used to represent OTN signal regeneration at the same layer.

Configure the BPS

Use this procedure to configure the Bits-Per-Symbol (BPS) parameter and verify BPS and baud rate ranges on optical interfaces.

This section provides instructions for configuring the Bits-Per-Symbol (BPS) parameter and viewing BPS and baud rate ranges on supported optical interfaces.

The `bits-per-symbol` parameter allows you to configure the modulation format on optical interfaces. This setting directly affects the spectral efficiency and data rate on a per-wavelength basis.

Supported baud rates are shown in the table.

Table 11: Supported baud rates

Traffic rate	Minimum baud rate	Maximum baud rate
400	43.34518	130.4647
600	59.53435	148.0555
800	79.37913	148.0555
1000	99.22392	148.0555

Use this task to configure BPS value to 3.4375 on the 1.2T and 2-QDD-C line cards to support 300G trunk configurations on 75 GHz networks.

Procedure

1. Run the **controller optics** *R/S/I/P* **bits-per-symbol value** command to configure the BPS to 3.4375 on the 1.2T and 2-QDD-C line cards. This configuration supports 300G trunk configurations on 75 GHz networks.

   Example

   This is a sample in which the BPS is configured to 3.4375.

   ```
   RP/0/RP0/CPU0:ios#configure
   Wed Mar 27 14:12:49.932 UTC
   RP/0/RP0/CPU0:ios(config)#controller optics 0/3/0/0 bits-per-symbol 3.4375
   RP/0/RP0/CPU0:ios(config)#commit
   ```

2. Run these commands to view the BPS and baud for a specific range.

- **show controller optics** *R/S/I/P* **bps-range** *bps-range* **| include** *data-rate* **| include** *fec-type*
- **show controller optics** *R/S/I/P* **baud-rate-range** *baud-range* **| include** *data-rate* **| include** *fec-type*

Example

```
RP/0/RP0/CPU0:ios#show controllers optics 0/3/0/0 bps-range 3 3.05 | include
 300G | include SD27
Thu Mar 28 03:01:39.751 UTC
300G            SD27            3.0000000       69.4350994
300G            SD27            3.0078125       69.2547485
300G            SD27            3.0156250       69.0753320
300G            SD27            3.0234375       68.8968428
300G            SD27            3.0312500       68.7192736
300G            SD27            3.0390625       68.5426174
300G            SD27            3.0468750       68.3668671
```

Example

```
RP/0/RP0/CPU0:ios#show controllers optics 0/3/0/0 baud-rate-range 43 43.4 |
include 300G | include SD27
Thu Mar 28 03:12:36.521 UTC
300G            SD27            4.8046875       43.3545986
300G            SD27            4.8125000       43.2842178
300G            SD27            4.8203125       43.2140651
300G            SD27            4.8281250       43.1441394
300G            SD27            4.8359375       43.0744397
300G            SD27            4.8437500       43.0049648
```

Trunk rates and BPSK modulation

This section explains how trunk rates on specific line cards support BPSK modulations and provides configuration methods and reference information.

Trunk rates on the 1.2T and 2-QDD-C line cards can be configured to 50G, 100G, and 150G to support Binary Phase-Shift Keying (BPSK) modulation.

This configuration optimizes the efficiency of carrying information over radio signals.

Configuration methods

You can configure trunk rates for BPSK modulation using these methods:

- Command-Line Interface (CLI)
- NETCONF YANG
- OC Models

Supported trunk rates and BPSK modulation

This table lists the trunk rates with the supported BPSK modulation:

Table 12: Trunk rates with the supported BPSK modulation

Trunk rate	BPSK modulation
50G	1 to 1.4453125
100G	1 to 2.890625
150G	1.453125 to 4.3359375

Configure trunk rate for BPSK modulation

Use this procedure to configure the trunk rate for BPSK modulation to optimize transmission parameters for your mxponder hardware.

Use this task to configure the trunk rate for BPSK modulation.

Procedure

Run the **configurehw-module location** *location* **mxponder trunk-rate {50G | 100G | 150G}**command to configure the trunk rate for BPSK modulation.

Example

This example shows how to configure trunk rate to 50G:

```
RP/0/RP0/CPU0:(config)#hw-module location 0/0/NXR0 mxponder
RP/0/RP0/CPU0:(config-hwmod-mxp)#trunk-rate 50G
RP/0/RP0/CPU0:(config-hwmod-mxp)#commit
```

View BPSK trunk rate ranges

Use this procedure to verify modulation settings and troubleshoot device performance by displaying the current trunk rate configured for BPSK modulation.

Determine the trunk rate configured for BPSK modulation on network hardware.

Use this task to verify modulation settings or to troubleshoot device performance. It displays the current trunk rate for BPSK modulation.

Procedure

Run the **show** command to view the trunk rate configured for BPSK modulation.

Example

```
RP/0/RP0/CPU0:ios(hwmod-mxp)#show hw-module location 0/0/NXR0 mxponder

Tue Feb 25 11:13:41.934 UTC


Location:             0/0/NXR0
```

```
Client Bitrate:       100GE
Trunk  Bitrate:       50G
Status:               Provisioned
LLDP Drop Enabled:    FALSE
ARP Snoop Enabled:    FALSE
Client Port                     Mapper/Trunk Port          CoherentDSP0/0/0/0
   CoherentDSP0/0/0/1
                                Traffic Split Percentage


HundredGigECtrlr0/0/0/2         ODU40/0/0/0                           50
                   50
```

```
RP/0/RP0/CPU0:ios#show controllers optics 0/0/0/0
Thu Mar  5 07:12:55.681 UTC
Controller State: Up
Transport Admin State: In Service
Laser State: On
LED State: Green
 Optics Status
         Optics Type:  DWDM optics
         DWDM carrier Info: C BAND, MSA ITU Channel=61, Frequency=193.10THz,
         Wavelength=1552.524nm

         Alarm Status:
         -------------
         Detected Alarms: None


         LOS/LOL/Fault Status:

         Alarm Statistics:

         -------------
         HIGH-RX-PWR = 0            LOW-RX-PWR = 2
         HIGH-TX-PWR = 0            LOW-TX-PWR = 0
         HIGH-LBC = 0               HIGH-DGD = 0
         OOR-CD = 0                 OSNR = 0
         WVL-OOL = 0                MEA  = 0
         IMPROPER-REM = 0
         TX-POWER-PROV-MISMATCH = 0
         Laser Bias Current = 0.0 %
         Actual TX Power = 1.97 dBm
         RX Power = 1.58 dBm
         RX Signal Power = 0.60 dBm
         Frequency Offset = 386 MHz

         Performance Monitoring: Enable

         THRESHOLD VALUES
         ----------------

         Parameter                 High Alarm  Low Alarm  High Warning  Low
Warning
         ------------------------  ----------  ---------  ------------
-----------
         Rx Power Threshold(dBm)          4.9      -12.0           0.0
   0.0
         Tx Power Threshold(dBm)          3.5      -10.1           0.0
   0.0
```

```
        LBC Threshold(mA)                N/A        N/A          0.00
  0.00

        Configured Tx Power = 2.00 dBm
        Configured CD High Threshold = 180000 ps/nm
        Configured CD lower Threshold = -180000 ps/nm
        Configured OSNR lower Threshold = 0.00 dB
        Configured DGD Higher Threshold = 180.00 ps
        Baud Rate =  34.7175521851 GBd
        Bits per Symbol = 1.0000000000  bits/symbol
        Modulation Type: BPSK
        Chromatic Dispersion -9 ps/nm
        Configured CD-MIN -180000 ps/nm  CD-MAX 180000 ps/nm
        Polarization Mode Dispersion = 0.0 ps
        Second Order Polarization Mode Dispersion = 125.00 ps^2
        Optical Signal to Noise Ratio = 34.60 dB
        SNR = 20.30 dB
        Polarization Dependent Loss = 0.20 dB
        Polarization Change Rate = 0.00 rad/s
        Differential Group Delay = 2.00 ps
        Filter Roll Off Factor : 0.100
        Rx VOA Fixed Ratio : 15.00 dB
        Enhanced Colorless Mode : 0
        Enhanced SOP Tolerance Mode : 0
        NLEQ Compensation Mode : 0
        Cross Polarization Gain Mode : 0
        Cross Polarization Weight Mode : 0
        Carrier Phase Recovery Window : 0
        Carrier Phase Recovery Extended Window : 0
AINS Soak                : None
AINS Timer               : 0h, 0m
AINS remaining time      : 0 seconds
```

QXP cards

This section explains the features, operating modes, supported data rates, and configuration of QXP cards in the Cisco NCS 1014 system.

Table 13: Feature History

Feature Name	Release Information	Description
NCS1K4-QXP-K9 Line Card Support on NCS 1014	Cisco IOS XR Release 24.1.1	NCS1K4-QXP-K9 line card delivers low cost 100G and 400G DWDM transmission with ZR+ optics on a router. This line card can be used in both traditional Optical Networking solution and in Routed Optical Networking solution. This line card has 16 pluggable ports with eight QSFP-DD client ports and eight QSFP-DD trunk ports. For more information about the NCS1K4-QXP-K9 card, see the datasheet.

The NCS1K4-QXP-K9 3.2T QSFP-DD DCO Transponder Line Card has eight client ports (QSFP-DD) and eight trunk ports (QSFP-DD ZR+). Each line card supports up to 3.2 Tbps traffic. The client rates that are supported are 400GE, 4x100GE, and 100GE Ethernet only. The modulation formats supported are 16 QAM for 400GE Txp/4x100GE Mxp.

The QXP line card provides up to 16 QSFP-DD ports (eight QSFP-DD client ports and eight QSFP-DD trunk ports). The supported operating modes are:

- 400GE-TXP
- 4X100GE MXP
- 2x100GE MXP

The QXP card has 8 slices. Each slice consists of one client and one trunk port with a slice capacity of 400G. The total capacity is 3.2T.

Table 14: Slice and port mapping on the QXP card

Slice	Trunk port	Client port
0	0	1
1	2	3
2	4	5
3	6	7
4	8	9
5	10	11
6	12	13
7	14	15

Note

- When you use OPENROADM trunk mode by configuring the **trunk-mode OR** command, use only alternate slices on the QXP card. Either use slices 0, 2, 4, 6 or 1, 3, 5, 7.
- QDD-400G-ZR-S pluggable module supports FEC mode CFEC only.
- QDD-400G-ZR-S pluggable module operates only as an Ethernet transponder.

Supported data rates for QXP card

This table shows the client and trunk ports that are enabled for transponder and muxponder modes.

Operating mode	Card support	Client data rate	Client optics	Trunk ports	Client ports
400GE-TXP	QXP Card	400G	• QDD-400G-DR4-S • QDD-400G-FR4-S • QDD-400-AOCxM	0,2,4,6,8,10,12,14	1,3,5,7,9,11,13,15

Operating mode	Card support	Client data rate	Client optics	Trunk ports	Client ports
4X100GE MXP	QXP Card	4X100G Break out	• QDD-400G-DR4-S • QDD-4X100G-LR-S	0,2,4,6,8,10,12,14	1,3,5,7,9,11,13,15
2X100GE MXP	QXP Card	2X100G Break out	• QDD-400G-DR4-S • QDD-4X100G-LR-S	0,2,4,6,8,10,12,14	1,3,5,7,9,11,13,15

DAC supported modes for NCS1K4-QXP-K9 card

DAC support is enabled on the NCS1K4-QXP-K9 card for 2x100G, 4x100G, and 400G operating modes.

This table provides the details of the respective DAC rates for the different trunk rates for NCS1K4-QXP-K9 card.

Table 15: DAC supported data rates for NCS1K4-QXP-K9 card

Trunk rate	Modulation format	Default value	Modified DAC supported
200G	QPSK	1x1	1x1.50
200G	8QAM	1x1.25	N/A
200G	16-QAM	1x1.25	N/A
400G	16-QAM	1x1	1x1.50

This example changes the DAC rate to 1x1.5 on an optics controller.

```
RP/0/RP0/CPU0:ios(config)#controller optics 0/0/0/0
RP/0/RP0/CPU0:ios(config-Optics)#dac-Rate 1x1.50
RP/0/RP0/CPU0:ios(config-Optics)#commit
```

Note

- Changing the DAC turns the laser Off and then back on for the optics. This is a traffic impacting operation.
- The DAC rate configuration must match on both ends of a connection.

Configure 400G transponder mode

Use this procedure to configure and provision the 400G transponder mode for a network device.

Use this task to configure and provision the 400G transponder mode.

Procedure

1. Run the command **hw-module location** *location* **mxponder-slice** *slice-number* **trunk-rate 400G trunk-mode [ZR | OR] client-port-rate** *port-number* **client-type** *client rate* to configure and provision 400G TXP.

   Example

```
RP/0/RP0/CPU0:ios#configure
RP/0/RP0/CPU0:ios(config)#hw-module location 0/2/NXR0 mxponder-slice 4
RP/0/RP0/CPU0:ios(config-hwmod-mxp)#trunk-rate 400G
RP/0/RP0/CPU0:ios(config-hwmod-mxp)#trunk-mode ZR
RP/0/RP0/CPU0:ios(config-hwmod-mxp)#client-port-rate 9 client-type 400GE
RP/0/RP0/CPU0:ios(config-hwmod-mxp)#commit
RP/0/RP0/CPU0:ios(config-hwmod-mxp)#end
```

   Note

   The **trunk-mode** command allows you to choose between OTN and Ethernet traffic on the trunk port.

2. Verify the 400G transponder mode configured on the QXP card.

   Example

```
RP/0/RP0/CPU0:ios#show hw-module location 0/2/NXR0 mxponder-slice 4
Mon Sep 21 10:39:38.198 UTC

Location:             0/2/NXR0
Slice ID:             4
Client Bitrate:       400GE
Trunk  Bitrate:       400G
Status:               Provisioned
LLDP Drop Enabled:    FALSE
ARP Snoop Enabled:    FALSE
Client Port                    Mapper/Trunk Port         CoherentDSP0/2/0/8

                                Traffic Split Percentage

FourHundredGigECtrlr0/2/0/9             -                           100

RP/0/RP0/CPU0:ios#
```

Configure 400G muxponder mode

Use this procedure to configure and provision a 400G muxponder mode on supported hardware.

Use this task to configure and provision a 400G MXP.

Procedure

Run the **hw-module location** *location* **mxponder-slice** *slice-number* **trunk-rate 400G client-port-rate***port-number* **lane** *lane-number* **client-type 100GE** to configure and provision 400G MXP.

Example

The is a sample to configure a 400G MXP.

```
RP/0/RP0/CPU0:ios#configure
RP/0/RP0/CPU0:ios(config)#hw-module location 0/2/NXR0 mxponder-slice 4
RP/0/RP0/CPU0:ios(config-hwmod-mxp)#trunk-rate 400G
RP/0/RP0/CPU0:ios(config-hwmod-mxp)#trunk-mode ZR
RP/0/RP0/CPU0:ios(config-hwmod-mxp)#client-port-rate 9 lane 1 client-type 100GE

RP/0/RP0/CPU0:ios(config-hwmod-mxp)#client-port-rate 9 lane 2 client-type 100GE

RP/0/RP0/CPU0:ios(config-hwmod-mxp)#client-port-rate 9 lane 3 client-type 100GE

RP/0/RP0/CPU0:ios(config-hwmod-mxp)#client-port-rate 9 lane 4 client-type 100GE

RP/0/RP0/CPU0:ios(config-hwmod-mxp)#commit
RP/0/RP0/CPU0:ios(config-hwmod-mxp)#end
```

This is a sample output of **show hw-module location** *location* **mxponder-slice** *slice-number* when configured in 400G MXP Mode.

```
RP/0/RP0/CPU0:ios#show hw-module location 0/2/NXR0 mxponder-slice 4
Mon Sep 21 10:47:18.067 UTC

Location:             0/2/NXR0
Slice ID:             4
Client Bitrate:       100GE
Trunk  Bitrate:       400G
Status:               Provisioned
LLDP Drop Enabled:    FALSE
ARP Snoop Enabled:    FALSE
Client Port                     Mapper/Trunk Port          CoherentDSP0/2/0/8

                                Traffic Split Percentage

HundredGigECtrlr0/2/0/9/1               -                           100
HundredGigECtrlr0/2/0/9/2               -                           100
HundredGigECtrlr0/2/0/9/3               -                           100
HundredGigECtrlr0/2/0/9/4               -                           100

RP/0/RP0/CPU0:ios#
```

Configure 2x100G muxponder mode

Use this procedure to explains how to configure and provision 2x100G muxponder mode on the QXP card. It provides the necessary command sequences and sample output for verification.

Use this task to configure and provision 2x100G MXP.

Procedure

Run the **hw-module location** *location* **mxponder-slice** *slice-number* **trunk-rate 200G client-port-rate***port-number* **lane** *lane-number* **client-type 100GE** to configure 2x100G MXP.

Example

This is a sample to configure 2x100G MXP.

```
RP/0/RP0/CPU0:ios#configure
RP/0/RP0/CPU0:ios(config)#hw-module location 0/2/NXR0 mxponder-slice 4
RP/0/RP0/CPU0:ios(config-hwmod-mxp)#trunk-rate 200G
RP/0/RP0/CPU0:ios(config-hwmod-mxp)#trunk-mode ZR
RP/0/RP0/CPU0:ios(config-hwmod-mxp)#client-port-rate 9 lane 1 client-type 100GE
RP/0/RP0/CPU0:ios(config-hwmod-mxp)#client-port-rate 9 lane 2 client-type 100GE
RP/0/RP0/CPU0:ios(config-hwmod-mxp)#commit
RP/0/RP0/CPU0:ios(config-hwmod-mxp)#end
```

This is a sample output of **show hw-module location** *location* **mxponder-slice** *slice-number* when configured in 2x100G MXP mode.

```
RP/0/RP0/CPU0:ios#sh hw-module location 0/2/NXR0 mxponder-slice 0
Location:             0/2
Slice ID:             1
Client Bitrate:       100GE
Trunk  Bitrate:       200G
Status:               Provisioned
LLDP Drop Enabled:    FALSE
ARP Snoop Enabled:    FALSE
Client Port                     Mapper/Trunk Port          CoherentDSP0/2/0/2

                                Traffic Split Percentage

HundredGigECtrlr0/2/0/1/1               -                           100
HundredGigECtrlr0/2/0/1/2               -                           100
```

Cisco 400G QSFP-DD high-power (Bright ZR+) optical module support on QXP card

This section explains the supported operating modes, modulation formats, and FEC settings for Bright ZR+ optical modules on QXP cards.

QXP card supports Cisco 400G QSFP-DD High-Power (Bright) optical modules.

- DP04QSDD-HK9 operates as Ethernet or OTN transponder.
- DP04QSDD-HE0 operate only as an Ethernet transponder.

Table 16: Operating modes supported for Bright ZR+ pluggable modules on QXP card

Operating mode	Modulation	FEC
4x100GE MXP	16-QAM	CFEC
4x100GE MXP	16-QAM	OFEC
2x100GE MXP	QPSK	OFEC
400GE TXP	16-QAM	CFEC

Operating mode	Modulation	FEC
400GE TXP	16-QAM	OFEC

Configure OTN and Ethernet data path on the Bright ZR plus pluggable optical modules

Use this procedure to configure the OTN and Ethernet data paths on Bright ZR+ pluggable optical modules for use in OpenROADM (OTN) or ZR (Ethernet) modes.

Use this task to configure the OTN and Ethernet data path on Bright ZR+ pluggable optical modules.

Procedure

1. Run the **hw-module location** *location* **mxponder-slice** *slice-number* **trunk-mode OR client-rate***rate* to configure OTN data path on the Bright ZR+ pluggable optical modules. The **trunk-mode OR** refers to OpenROADM.

   Example

   This is a sample to configure a 4x100G OTN trunk on a Bright ZR+ pluggable.

```
RP/0/RP0/CPU0:ios#configure
Tue Apr 11 19:29:20.132 UTC
RP/0/RP0/CPU0:ios(config)#hw-module location 0/2/NXR0
RP/0/RP0/CPU0:ios(config-hwmod)#mxponder-slice 4
RP/0/RP0/CPU0:ios(config-hwmod-mxp)#trunk-mode OR
RP/0/RP0/CPU0:ios(config-hwmod-mxp)#trunk-rate 400G
RP/0/RP0/CPU0:ios(config-hwmod-mxp)#  client-port-rate 9 lane 1 client-type
100GE
RP/0/RP0/CPU0:ios(config-hwmod-mxp)#  client-port-rate 9 lane 2 client-type
100GE
RP/0/RP0/CPU0:ios(config-hwmod-mxp)#  client-port-rate 9 lane 3 client-type
100GE
RP/0/RP0/CPU0:ios(config-hwmod-mxp)#  client-port-rate 9 lane 4 client-type
100GE
```

2. Run the **hw-module location** *location* **mxponder-slice** *slice-number* **trunk-mode ZR client-rate** *rate* to configure Ethernet data path on the Bright ZR+ pluggable optical modules.

   Example

   This is a sample to configure an Ethernet trunk on a Bright ZR+ pluggable.

```
RP/0/RP0/CPU0:ios#configure
Tue Apr 11 19:29:20.132 UTC
RP/0/RP0/CPU0:ios(config)#hw-module location 0/2/NXR0
RP/0/RP0/CPU0:ios(config-hwmod)#mxponder-slice 4
RP/0/RP0/CPU0:ios(config-hwmod-mxp)#trunk-mode ZR
RP/0/RP0/CPU0:ios(config-hwmod-mxp)#trunk-rate 400G
```

   This is a sample configuration to set 0dBm transmit power on a Bright ZR+ pluggable.

```
RP/0/RP0/CPU0:ios#configure
RP/0/RP0/CPU0:ios(config)#controller optics 0/0/0/2
RP/0/RP0/CPU0:ios(config-Optics)#transmit-power 0
Thu Mar  9 13:02:30.662 UTC
WARNING! Changing TX power can impact traffic
```

```
RP/0/RP0/CPU0:ios(config-Optics)#commit
Thu Mar  9 13:02:31.566 UTC
```

The is a sample output of the **show controllers optics** command, with the transmit power set to 0 dBm.

```
RP/0/RP0/CPU0:ios#show controllers optics 0/0/0/8
Thu Apr 13 13:54:33.163 UTC
 Controller State: Up
 Transport Admin State: In Service
 Laser State: On
 LED State: Green
 Optics Status
         Optics Type:  QSFP-DD DWDM
         DWDM carrier Info: C BAND, MSA ITU Channel=49, Frequency=193.70THz,

         Wavelength=1547.715nm
         Alarm Status:
         -------------
         Detected Alarms: None
         LOS/LOL/Fault Status:
         Alarm Statistics:
         -------------
         HIGH-RX-PWR = 0            LOW-RX-PWR = 4
         HIGH-TX-PWR = 0            LOW-TX-PWR = 1
         HIGH-LBC = 0               HIGH-DGD = 0
         OOR-CD = 0                 OSNR = 4
         WVL-OOL = 0                MEA  = 0
         IMPROPER-REM = 0
         TX-POWER-PROV-MISMATCH = 0
         Laser Bias Current = 0.0 %
         Actual TX Power = 0.00 dBm
         RX Power = -10.50 dBm
         RX Signal Power = -10.35 dBm
         Frequency Offset = 199 MHz

         Performance Monitoring: Enable

         THRESHOLD VALUES
         ----------------

         Parameter                 High Alarm  Low Alarm  High Warning  Low
Warning
         ------------------------  ----------  ---------  ------------
-----------
         Rx Power Threshold(dBm)          3.0      -24.5           0.0
    0.0
         Tx Power Threshold(dBm)          0.0      -16.0           0.0
    0.0
         LBC Threshold(mA)                N/A        N/A          0.00
   0.00

         LBC High Threshold = 90 %
         Configured Tx Power = 0.00 dBm
         Configured CD High Threshold = 52000 ps/nm
         Configured CD lower Threshold = -52000 ps/nm
         Configured OSNR lower Threshold = 21.10 dB
         Configured DGD Higher Threshold = 67.00 ps
```

> **Note**
>
> DP04QSDD-HK9 operates as Ethernet or OTN transponder. DP04QSDD-HE0 operate only as an Ethernet transponder. DP04QSDD-HE0 support only trunk-mode ZR. Configuring trunk-mode OR on the DP04QSDD-HE0 pluggable raises the MEA alarm.

Configure the GCC0 interface on a QXP card

Use this procedure to configure the GCC0 interface on a QXP card's Coherent DSP controller by assigning it an IPv4 address for remote management when DCN access is unavailable

Use this task to enable and configure the GCC0 interface on a Coherent DSP controller in a QXP card. Assign an IPv4 address to the interface to facilitate configuration. The GCC0 interface operates at a data rate of 7.7 Mbps on the QXP card.

Table 17: Feature History

Feature Name	Release Information	Feature Description
GCC0 interface support on NCS1K4-QXP-K9 card	Cisco IOS XR Release 25.4.1	This feature introduces GCC0 interface support in Trunk OpenROADM mode for the DP04QSDD-HK9 pluggable on the NCS1K4-QXP-K9 card. The Coherent DSP controller supports the GCC0 interface, enabling you to remotely manage, monitor, and operate the chassis and line cards, especially in environments without direct Data Communication Network (DCN) access.

Follow these steps to configure the GCC0 interface on a QXP card.

Procedure

1. Enter configuration mode for the Coherent DSP controller and enable the GCC0 interface.

   Example

   ```
   RP/0/RP0/CPU0:ios#configure
   RP/0/RP0/CPU0:ios(config)#controller coherentDSP 0/0/0/0
   RP/0/RP0/CPU0:ios(config-CoDSP)#gcc0
   RP/0/RP0/CPU0:ios(config-CoDSP)#commit
   ```

2. Enter the **ipv4 address** *ipv4-address net-mask* command to assign the IPv4 address and subset mask to the GCC0 interface.

Example

```
RP/0/RP0/CPU0:ios#configure
RP/0/RP0/CPU0:ios(config)#interface gcc0 0/0/0/0
RP/0/RP0/CPU0:ios(config-CoDSP)#ipv4 address 192.0.2.1 255.255.255.0
RP/0/RP0/CPU0:ios(config-CoDSP)#commit
```

3. (Optional) Enter the **interface Loopback** *R/S/I/P* **ipv4 address** *ipv4-address* command to configure the interface loopback.

   Example

```
RP/0/RP0/CPU0:ios#configure
RP/0/RP0/CPU0:ios(config)#interface Loopback0
RP/0/RP0/CPU0:ios(config-if)#ipv4 address 20.1.1.1 255.255.255.255
```

4. (Optional) Enter the **ipv4 unnumbered loopback 0** command to configure the GCC0 interface using the loopback IP address.

   Example

```
RP/0/RP0/CPU0:ios#configure
RP/0/RP0/CPU0:ios(config)#interface GCC0 0/1/0/0
RP/0/RP0/CPU0:ios(config-if)#ipv4 unnumbered loopback 0
RP/0/RP0/CPU0:ios(config-if)#exit
RP/0/RP0/CPU0:ios(config)#exit
```

The GCC0 interface is enabled with the specified IPv4 address and configured on the Coherent DSP controller of the QXP card.

Verify the GCC0 interface status and IPv4 configuration

Use this procedure to check the operational status and IPv4 address assignment of GCC0 interfaces after configuration. The task ensures that the GCC0 interface is active and correctly configured for network operations.

Use this task to confirm the operational status and assigned IPv4 address of GCC0 interfaces.

Procedure

Run the **show ipv4 interface brief** command to display a summary of IPv4 interfaces.

Example

```
RP/0/RP0/CPU0:ios#show ipv4 interface brief
Tue Sep 16 00:40:52.056 UTC
Interface                 IP-Address      Status          Protocol
Vrf-Name
GCC00/0/0/0               198.51.100.51     Up              Up
default
MgmtEth0/RP0/CPU0/0       192.0.2.32    Up              Up              default
MgmtEth0/RP0/CPU0/1       unassigned      Shutdown        Down
```

```
default
MgmtEth0/RP0/CPU0/2       unassigned      Shutdown        Down
default
```

The output displays the IPv4 address, status, and protocol for GCC0 interfaces, confirming their configuration.

Configure the MTU to prevent IP fragmentation on GCC0 for SCP

Use this procedure to configure the MTU size on a GCC0 interface to prevent IP fragmentation when using the SCP protocol.

Use this task to prevent IP fragmentation on GCC0 interfaces during SCP protocol operations by limiting the maximum transmission unit (MTU).

IP fragmentation is not supported on GCC0 interfaces for the SCP protocol. To avoid fragmentation, configure the interface to restrict the maximum packet size to less than 1454 bytes, which is the fragmentation limit.

Procedure

1. Enter the configuration mode and enable the GCC0 interface.

   Example

   ```
   RP/0/RP0/CPU0:ios#configure
   RP/0/RP0/CPU0:ios(config)#interface gcc0 0/0/0/0
   ```

2. Enter the command **ipv4 mtu** *size* to set the IPv4 MTU size for the GCC0 interface.

   The MTU size must be 1200 bytes.

   Example

   ```
   RP/0/RP0/CPU0:ios(config-if)#ipv4 mtu 1200
   RP/0/RP0/CPU0:ios(config-if)#commit
   ```

   The IPv4 MTU is now configured on the GCC0 interface. This setting limits the maximum packet size and prevents SCP-related fragmentation.

ONS-QDD-OLS pluggable

This section lists the feature history, supported hardware, channel breakout options, CLI integration, and key benefits for the ONS-QDD-OLS pluggable.

Table 18: Feature History

Feature Name	Release Information	Description
Pluggable support	Cisco IOS XR Release 25.2.1	The NCS1K4-QXP-K9 line card now supports the new ONS-QDD-OLS optical amplifier pluggable. It is supported independently on all 16 ports of the QXP card and offers various channel breakout options to combine or separate each channel from a coherent DWDM optical source using these breakout cables: • ONS-BRK-CS-8LC • ONS-BRK-CS-16LC • ONS-CAB-CS-LC-5 This pluggable increases fiber bandwidth and lowers power dissipation. CLI: These keywords are added to the **hw-module location** command: • **ols-port <port number>** • **mode edfa**

ONS QDD optical line systems

This section explains the ONS QDD optical line system architecture, its functional features, and supported configuration modes.

The ONS-QDD-OLS is a pluggable optical amplifier that interconnects two routers or switches for transporting a limited number of coherent optical channels over a single span point-to-point link.

ONS-QDD-OLS features and support

These are the key features of the ONS-QDD-OLS pluggable optical amplifier:

- OLS Optics is supported independently on all 16 ports of NCS1K4-QXP-K9 line card. The EDFA `ols-port` mode is supported on ports 0 through 15 of the ONS-QDD-OLS pluggable.
- New XR CLI commands are introduced for OLS configuration:
  - `OLS-PORT` is used to select a specific port, extending the `hwmode` configuration.
  - `OLS-MODE` is used under the `hw-module` configuration specifically for EDFA settings.
- When a port is configured as an `OLS-PORT`, the corresponding TXP/MXP slice becomes unavailable for provisioning.
  - COM is represented as `OTS R/S/I/P/0`.
  - LINE is represented as `OTS R/S/I/P/1`.

- On the OTS controller, only egress parameters configuration is supported; ingress parameters are not supported.

The OLS configurations also utilize these additional breakout cable- assembly and patch-cord to establish connections between the EDFA module and the QDD-ZR/ZRP optical channels:

- ONS-BRK-CS-8LC: A dual-fanout 1x8 cable-assembly with embedded passive splitter and coupler.
- ONS-BRK-CS-16LC: A dual-fanout 1x16 cable-assembly with embedded passive splitter and coupler.
- ONS-CAB-CS-LC-5: A 5-meter dual adapter patch-cord with CS-connectors on one end and LC-connectors on the other.

Supported wavelength or frequency configuration

For each channel supported through ONS-BRK-CS-8LC or ONS-BRK-CS-16LC passive/mux cable, the wavelength or the frequency must be configured according to this table:

Table 19: ONS-QDD-OLS operating signal wavelength range

Channel spacing	Total bandwidth	Wavelength		Frequency	
		Start	End	Start	End
8 channels - 200 GHz spaced 16 channels - 100 GHz spaced	19.2 nm 2.4 THz	1539.1 nm	1558.4 nm	192.375 THz	194.775 THz

Functional description of QDD-OLS

The QDD OLS pluggable contains the COM side and the Line side as shown in this figure:

Figure 3: Functional description of QDD OLS

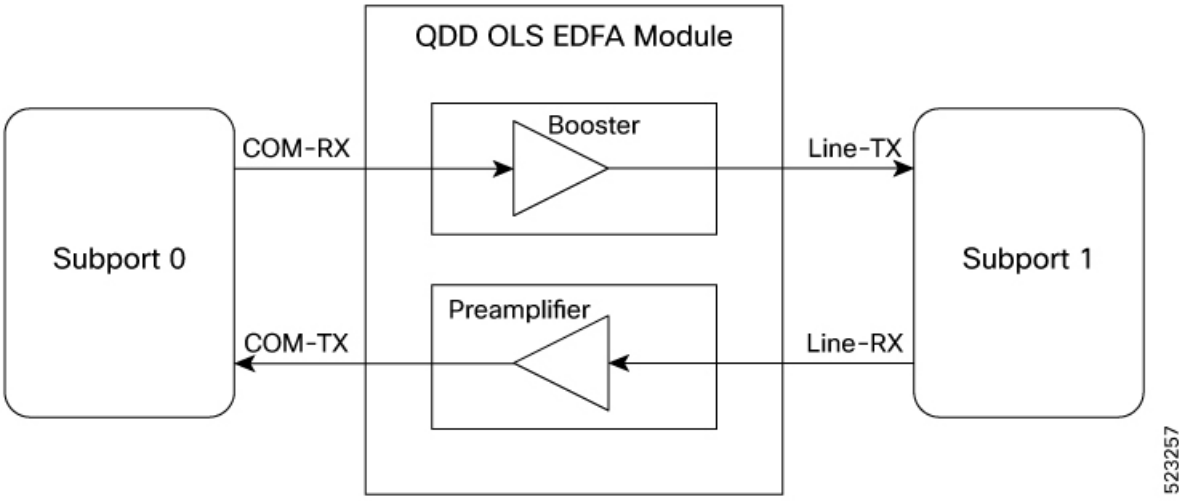

Each physical port of the QDD OLS pluggable is represented as two ots controllers (subport 0 and subport 1). COM port is subport 0 and Line port is subport 1.

The Gain of the Booster is associated to subport 1 while the gain of the Preamplifier is associated to subport 0.

Table 20: OTS and optical ports

Controller	Optical ports
ots R/S/I/P/0	COM-RX (booster input)
	COM-TX (preamplifier output)
ots R/S/I/P/1	LINE-RX (preamplifier input)
	LINE-TX (booster output)

Configure the ols-port in EDFA mode

Use this procedure to configure an ONS-QDD-OLS pluggable ols-port to operate in EDFA mode for enhanced optical amplification.

Use this task to configure the ONS-QDD-OLS pluggable ols-port in EDFA mode.

Procedure

1. Run the **hw-module location** command to configure the pluggable on specific ols-port.

   Example

   This is a sample to configure the pluggable on slot 2 and port 14.

```
RP/0/RP0/CPU0:ios#conf
Fri Feb 28 22:36:59.927 IST
RP/0/RP0/CPU0:ios(config)#hw-module location 0/2/NXR0 ols-port 14
```

2. Configure the ols-port in the EDFA mode.

   Example

```
RP/0/RP0/CPU0:ios(config-ols)#mode edfa
```

3. Run the **commit** and **end** commands to commit the changes and exit the configuration mode.

   Example

```
RP/0/RP0/CPU0:ios(config-ols)#commit
Fri Feb 28 22:37:26.891 IST
RP/0/RP0/CPU0:ios(config-ols)#end
RP/0/RP0/CPU0:ios#
```

4. Verify the configuration using the **show hw-module location***location***ols-port** command in EDFA mode.

Example

```
RP/0/RP0/CPU0:ios#show hw-module location 0/2/NXR0
         ols-port 14
         mode edfa
```

OTS parameters and operational data sample configurations

This section provides examples of OTS parameter configurations and operational data for the ONS-QDD-OLS pluggable, including supported and unsupported features.

This table lists configuration examples for ONS-QDD-OLS pluggable OTS parameters:

Table 21: OTS parameters

Parameters	Configuration example

Gain setting in COM port	`RP/0/RP0/CPU0:ios#configur`
	`Fri Feb 28 23:06:25.489 IST`
	`RP/0/RP0/CPU0:ios(config)#controller`
	` ots 0/2/0/14/0`
	`RP/0/RP0/CPU0:ios(config-Ots)#egress-ampli-gain`
	` 200`
	`RP/0/RP0/CPU0:ios(config-Ots)#commit`
	`Fri Feb 28 23:06:48.834 IST`
	`RP/0/RP0/CPU0:ios(config-Ots)#end`
	`RP/0/RP0/CPU0:ios#`
	`RP/0/RP0/CPU0:ios#`

Operational mode	`RP/0/RP0/CPU0:ios#configur`
	`Mon Feb  3 19:20:02.757 UTC`
	`RP/0/RP0/CPU0:ios(config)#controller`
	` ots 0/0/0/1/0`
	`RP/0/RP0/CPU0:ios(config-Ots)#egress-ampli-mode`
	` ?`
	`  power-control  Set amplifier to`
	`power control mode`
	`RP/0/RP0/CPU0:ios(config-Ots)#egress-ampli-mode`
	` power-control`
	`RP/0/RP0/CPU0:ios(config-Ots)#commit`
	
	`Mon Feb  3 19:20:13.832 UTC`

Gain setting in Line port	`RP/0/RP0/CPU0:ios#configur`
	`Fri Feb 28 23:08:08.172 IST`
	`RP/0/RP0/CPU0:ios(config)#`
	`RP/0/RP0/CPU0:ios(config)#controller`
	` ots 0/2/0/14/1`
	`RP/0/RP0/CPU0:ios(config-Ots)#egress-ampli-gain`
	` 210`
	`RP/0/RP0/CPU0:ios(config-Ots)#commit`
	`Fri Feb 28 23:08:20.677 IST`
	`RP/0/RP0/CPU0:ios(config-Ots)#`

Power	`RP/0/RP0/CPU0:ios#configur`
	
	`Mon Feb  3 19:22:36.395 UTC`
	`RP/0/RP0/CPU0:ios(config)#controller`
	` ots 0/0/0/1/0`
	`RP/0/RP0/CPU0:ios(config-Ots)#egress-ampli-power`
	` 110`
	`RP/0/RP0/CPU0:ios(config-Ots)#commit`
	
	`Mon Feb  3 19:22:45.173 UTC`

Egress ampli OSRI mode	

Parameters	Configuration example

	`RP/0/RP0/CPU0:ios(config)#controller ots 0/2/0/14/0`
	`RP/0/RP0/CPU0:ios(config-Ots)#egress-ampli-osri`
	
	`RP/0/RP0/CPU0:ios(config-Ots)#commit`
	`Fri Feb 28 23:13:07.065 IST`
	`RP/0/RP0/CPU0:ios(config-Ots)#`

Delete configuration for egress ampli OSRI mode	`RP/0/RP0/CPU0:ios(config)#controller ots 0/2/0/14/0`
	`RP/0/RP0/CPU0:ios(config-Ots)#no egress-ampli-osri`
	`RP/0/RP0/CPU0:ios(config-Ots)#commit`
	`Fri Feb 28 23:14:05.117 IST`
	`RP/0/RP0/CPU0:ios(config-Ots)#`

ALS on line	`RP/0/RP0/CPU0:ios#configur`
	`Mon Feb  3 19:11:03.983 UTC`
	`RP/0/RP0/CPU0:ios(config)#controller ots 0/1/0/1/1`
	`RP/0/RP0/CPU0:ios(config-Ots)#egress-ampli-safety-control-mode ?`
	`  auto  Select Safety Control Mode: Automatic`
	`  disabled  Disable Safety Control Mode`
	`RP/0/RP0/CPU0:ios(config-Ots)#egress-ampli-safety-control-mode disabled`
	`RP/0/RP0/CPU0:ios(config-Ots)#commit`
	
	`Mon Feb  3 19:11:30.980 UTC`

TX low threshold	`RP/0/RP0/CPU0:ios#configur`
	`Mon Feb  3 18:38:42.101 UTC`
	`RP/0/RP0/CPU0:ios(config)#controller ots 0/0/0/1/0`
	`RP/0/RP0/CPU0:ios(config-Ots)#tx-low-threshold 160`
	`RP/0/RP0/CPU0:ios(config-Ots)#commit`
	
	`Mon Feb  3 18:39:09.280 UTC`

RX low threshold	`RP/0/RP0/CPU0:ios#configur`
	`Mon Feb  3 18:42:06.049 UTC`
	`RP/0/RP0/CPU0:ios(config)#controller ots 0/0/0/1/1`
	`RP/0/RP0/CPU0:ios(config-Ots)#rx-low-threshold -40`
	`RP/0/RP0/CPU0:ios(config-Ots)#commit`
	
	`Mon Feb  3 18:42:27.695 UTC`

Operational data on COM port, line port, and optics

This table lists configurations examples and unsupported parameters on the ONS-QDD-OLS pluggable:

Table 22: Operational data for COM port, line port, and optics

Operational data	Configuration example	Unsupported parameters
COM port (OTS 0)		• INGRESS Parameters(alarms statistics) • HIGH-TX/RX-BR-POWER • SPAN-TOO-SHORT-TX/RX • Egress Ampli Force APR

Operational data	Configuration example	Unsupported parameters

```
RP/0/RP0/CPU0:ios#show controllers
ots 0/2/0/14/0
Fri Feb 28 22:44:42.823 IST
 Controller State: Up
 Transport Admin State: In Service
 LED State: Green
 Last link flapped: 00:38:04
         Alarm Status:
         -------------
         Detected Alarms: None
         Alarm Statistics:
         -----------------
         RX-LOS-P = 0
         RX-LOC = 0
         TX-POWER-FAIL-LOW = 0

         INGRESS-AUTO-LASER-SHUT = 0

         INGRESS-AUTO-POW-RED = 0

         INGRESS-AMPLI-GAIN-LOW = 0

         INGRESS-AMPLI-GAIN-HIGH = 0

         EGRESS-AUTO-LASER-SHUT = 0

         EGRESS-AUTO-POW-RED = 0

         EGRESS-AMPLI-GAIN-LOW = 0

         EGRESS-AMPLI-GAIN-HIGH = 0

         HIGH-TX-BR-PWR = 0

         HIGH-RX-BR-PWR = 0

         SPAN-TOO-SHORT-TX = 0

         SPAN-TOO-SHORT-RX = 0

         INGRESS-AMPLI-LASER-OFF = 0

         EGRESS-AMPLI-LASER-OFF = 0

         Parameter Statistics:
         ---------------------
         Total Rx Power = -9.18 dBm
         Total Tx Power = 14.36 dBm
         Egress Ampli Mode = Gain
         Egress Ampli Gain = 19.0 dB
         Egress Ampli OSRI = OFF
        Egress Ampli Force APR = OFF


         Configured Parameters:
         -------------
         Egress Ampli Mode = Gain
         Egress Ampli Gain = 19.0 dB
```

Operational data	Configuration example	Unsupported parameters

	`Egress Ampli Power = 8.0 dBm`
	`Egress Ampli OSRI = OFF`
	`Rx Low Threshold = -30.0 dBm`
	`Tx Low Threshold = -5.0 dBm`
	
	`RP/0/RP0/CPU0:ios#`
	`RP/0/RP0/CPU0:ios#`	

Line port (OTS 1)		• INGRESS Parameters(alarms statistics) • HIGH-TX/RX-BR-POWER • SPAN-TOO-SHORT-TX/RX • Egress Ampli Force APR

Operational data	Configuration example	Unsupported parameters

```
RP/0/RP0/CPU0:ios#sh controllers ots
 0/2/0/14/1
Fri Feb 28 22:54:15.156 IST
 Controller State: Up
 Transport Admin State: In Service
 LED State: Green
 Last link flapped: 00:47:36
         Alarm Status:
         -------------
         Detected Alarms: None
         Alarm Statistics:
         -----------------
         RX-LOS-P = 0
         RX-LOC = 0
         TX-POWER-FAIL-LOW = 0

         INGRESS-AUTO-LASER-SHUT = 0

         INGRESS-AUTO-POW-RED = 0

         INGRESS-AMPLI-GAIN-LOW = 0

         INGRESS-AMPLI-GAIN-HIGH = 0

         EGRESS-AUTO-LASER-SHUT = 0

         EGRESS-AUTO-POW-RED = 0

         EGRESS-AMPLI-GAIN-LOW = 0

         EGRESS-AMPLI-GAIN-HIGH = 0

         HIGH-TX-BR-PWR = 0

         HIGH-RX-BR-PWR = 0

         SPAN-TOO-SHORT-TX = 0

         SPAN-TOO-SHORT-RX = 0

         INGRESS-AMPLI-LASER-OFF = 0

         EGRESS-AMPLI-LASER-OFF = 0
  Parameter Statistics:
         ---------------------
         Total Rx Power = -5.67 dBm
         Total Tx Power = 10.80 dBm
         Egress Ampli Mode = Gain
         Egress Ampli Gain = 21.0 dB
         Egress Ampli Safety Control
 mode = disabled
         Egress Ampli OSRI = OFF
         Egress Ampli Force APR = OFF


         Configured Parameters:
         -------------
         Egress Ampli Mode = Gain
```

Operational data	Configuration example	Unsupported parameters
	Egress Ampli Gain = 21.0 dB Egress Ampli Power = 8.0 dBm Egress Ampli Safety Control mode = auto Egress Ampli OSRI = OFF Rx Low Threshold = -30.0 dBm Tx Low Threshold = -5.0 dBm	
Optics	RP/0/RP0/CPU0:Node68#sh controllers ots Ots Ots-Och RP/0/RP0/CPU0:Node68#sh controllers optics 0/3/0/2 Controller State: Administratively Down Transport Admin State: Out Of Service Laser State: Off LED State: Off Optics Status Optics Type: QSFP-DD DUAL EDFA Transceiver Vendor Details Form Factor : QSFP-DD Name : CISCO-ACCELINK Part Number : 10-100458-01 Rev Number : 27 Serial Number : ACW2739Z00M PID : ONS-QDD-OLS VID : V01 Firmware Version : Major.Minor.Build Active : 2.07. Inactive : 2.05. Date Code(yy/mm/dd) : 23/10/04 Fiber Connector Type: CS Otn Application Code: Not Set Sonet Application Code: Not Set Ethernet Compliance Code: Not set	–

DP04QSDD-E26-A1 pluggable

This section describes the DP04QSDD-E26-A1 pluggables, including their function, key attributes, and specific limitations.

A DP04QSDD-E26-A1 pluggable is a transceiver module that:

- Operates as a variant of the ZR pluggable family.
- Is supported on the QXP line card.
- Can be hosted by a DWDM line interface to support TXP or MXP datapaths.

Limitations for DP04QSDD-E26-A1 pluggable

- Supports only CFEC mode for FEC.
- Datapath support is limited to 400GE TXP and 4x100GE MXP.
- Supports only the ZRP trunk framing format.

2-QDD-C line cards

This section explains the features, supported configurations, and key capabilities of the 2-QDD-C line cards used with NCS 1014.

Table 23: Feature History

Feature	Release Information	Description
NCS1K4-2-QDD-C-K9 C-Band Line Card	Cisco IOS XR Release 25.2.1	NCS 1014 now supports the NCS1K4-2-QDD-C-K9 C-Band line card. This card features eight client ports (QSFP28 and QSFP-DD) and two software-configurable DWDM dual sub-channel module trunk ports. Each trunk port supports line rates of 200, 300, and 400 Gbps with precise control over modulation format, baud rate, and forward error correction. Additionally, the line card supports both module and slice configurations, enhancing network flexibility and performance.

This section describes the supported configurations and procedures to configure the card modes on the 2-QDD-C line card.

Limitations for 2-QDD-C

This section describes the key attributes and limitations of 2-QDD-C cards used in networking equipment.

- Flex Ethernet is not supported.
- A single 400GE cannot be split and use as 4x 100GE due to hardware limitations.

2-QDD-C card modes

This section explains the different operational configurations (modes) available for 2-QDD-C line cards.

A 2-QDD-C card mode is an operational configuration for 2-QDD-C line cards that support module and slice configurations.

The line cards have two trunk ports (0 and 1) and 8 client ports (2 through 9) each. You can configure the line card in two modes:

- Muxponder mode: Both trunk ports are configured with the same trunk rate. The client-to-trunk mapping is in a sequence in vertical order.
- Muxponder slice mode: Each trunk port is configured independently of the other with different trunk rates. The client-to-trunk mapping is fixed in vertical order. For Trunk 0, the client ports are 2 through 5. For Trunk 1, the client ports are 6 through 9.

Sub 50G configuration

This section explains sub 50G muxponder modes, supported configurations, port mappings, and restrictions for coupled mode setups.

You can configure sub 50G muxponder mode in these combination of trunk and client rates:

- 100GE Muxponder mode:
  - 1x100GE and 2x50G
  - 3x100GE and 2x150G
  - 5x100GE and 2x250G
  - 7x100GE and 2x350G
- OTU4 Muxponder mode:
  - 1xOTU4 and 2x50G
  - 3xOTU4 and 2x150G
  - 5xOTU4 and 2x250G
  - 7xOTU4 and 2x350G

This table displays the port configuration for the supported data rates.

Trunk data rate (per trunk)	Total configured data rate	Trunk ports	Client ports for trunk 0 (100G)	Shared client port (50G per trunk)	Client ports for trunk 1 (100G)
50G	100G	0, 1	-	2	-
150G	300G	0, 1	2	3	4
250G	500G	0, 1	2, 3	4	5, 6
350G	700G	0, 1	2, 3, 4	5	6, 7, 8

From Release 7.5.2, 2-QDD-C cards support an alternate port configuration for Sub 50G (split client port mapping) that you configure using CLI. The following table displays the port configuration for the supported data rates.

Trunk data rate (per trunk)	Total configured data rate	Trunk ports	Client ports for trunk 0 (100G)	Shared client port (50G per trunk)	Client ports for trunk 1 (100G)
50G	100G	0, 1	-	5	-
150G	300G	0, 1	2	5	6
250G	500G	0, 1	2, 3	5	6, 7
350G	700G	0, 1	2, 3, 4	5	6, 7, 8

For information on how to configure split client port mapping, see Configure Split Client Port Mapping .

Coupled mode restrictions

These restrictions apply to the coupled mode configuration:

- Both trunk ports must be configured with the same bits-per-symbol or baud rate and must be sent over same fiber and direction.
- The chromatic dispersion must be configured to the same value for both trunk ports.
- When trunk internal loopback is configured, it must be done for both trunk ports. Configuring internal loopback on only one trunk results in traffic loss.
- Fault on a trunk port of a coupled pair may cause errors on all clients including those running only on the unaffected trunk port.

Supported data rates for 2-QDD-C card

This section provides detailed tables of supported data rates, client/trunk port mappings, recommended trunk parameters, and configuration notes for the Cisco 2-QDD-C card.

These tables display the supported data rates for the 2-QDD-C card.

This table displays the client and trunk ports that are enabled for the muxponder configuration.

Trunk data rate	Card support	Client data rate	Client optics	Trunk ports	Client ports
200	2-QDD-C	100GE, OTU4	QSFP-28	0, 1	2, 3, 4, 5
300	2-QDD-C	100GE, OTU4	QSFP-28	0, 1	2, 3, 4, 5, 6, 7
400	2-QDD-C	100GE, OTU4	QSFP-28	0, 1	2, 3, 4, 5, 6, 7, 8, 9
200	2-QDD-C	400GE	QSFP-DD	0, 1	4
400	2-QDD-C	400GE	QSFP-DD	0, 1	4,8

This table displays the client and trunk ports that are enabled for the muxponder slice 0 configuration.

Trunk data rate	Card support	Client data rate	Trunk ports	Client ports
200	2-QDD-C	100GE, OTU4	0	2, 3
300	2-QDD-C	100GE, OTU4	0	2, 3, 4

Trunk data rate	Card support	Client data rate	Trunk ports	Client ports
400	2-QDD-C	100GE, OTU4	0	2, 3, 4, 5
400	2-QDD-C	400GE	0	4

This table displays the client and trunk ports that are enabled for the muxponder slice 1 configuration.

Trunk data rate	Card support	Client data rate	Trunk ports	Client ports
200	2-QDD-C	100GE, OTU4	1	6, 7
300	2-QDD-C	100GE, OTU4	1	6, 7, 8
400	2-QDD-C	100GE, OTU4	1	6, 7, 8, 9
400	2-QDD-C	400GE	1	8

This table displays the trunk parameter ranges for the 2-QDD-C card.

Trunk payload	FEC	Min BPS	Max BPS	Min GBd	Max GBd
150G	27%	1.453125	4.335938	24.02079	71.67494
200G	27%	2	4.40625	31.51	69.43
250G	27%	2.414063	6	28.93129	71.9069
300G	27%	2.8984375	6	34.7175497	71.8681352
350G	27%	3.382813	6	40.5038	71.84047
400G	27%	3.8671875	6	46.2900663	71.8197392
150G	15%	1.320313	3.9375	24.02079	71.67494
200G	15%	1.7578125	5.25	24.02079115	71.74209625
250G	15%	2.195313	6	26.27274	71.80592
300G	15%	3.8203125	6	31.52728839	49.51525048
350G	15%	3.070313	6	36.78184	71.87901
400G	15%	3.8671875	6	42.03638452	71.9018782

Note

The recommended value for 6 BPS for corresponding line rates are listed below:

Trunk payload	FEC	BPS	GBd
300G	27%	6	34.7175
350G	27%	6	40.5038
400G	15%	6	42.0364

Configure the card mode for 2-QDD-C card

Use this procedure to configure a 2-QDD-C line card in either muxponder mode or muxponder slice mode by setting the client and trunk rates.

Use this task to configure a 2-QDD-C line card in either muxponder mode or muxponder slice mode. This configuration defines the client rate and the trunk rate for the line card.

Procedure

1. Run these commands to configure the 2-QDD-C card in muxponder mode. Set the client rate and the trunk rate as specified.
   - **hw-module location** *location* **mxponder client-rate {100GE | OTU4 }**
   - **hw-module location** *location* **mxponder trunk-rate** {**100G | 150G | 200G | 250G | 300G | 350G | 400G** }
   - **hw-module location** *location* **mxponder client-rate { 400GE}**
   - **hw-module location** *location* **mxponder trunk-rate { 200G | 400G** }

   Example

   This is a sample in which the card is configured in the muxponder mode with a 400G trunk rate.

```
RP/0/RP0/CPU0:ios#config
Tue Oct 15 01:24:56.355 UTC
RP/0/RP0/CPU0:ios(config)#hw-module location 0/1 mxponder client-rate 100GE
RP/0/RP0/CPU0:ios(config)#hw-module location 0/1 mxponder trunk-rate 400G
RP/0/RP0/CPU0:ios(config)#commit
```

   This is a sample in which the card is configured in the muxponder mode with a 400GE trunk rate.

```
RP/0/RP0/CPU0:west#configure
Thu Oct  7 11:43:01.914 IST
RP/0/RP0/CPU0:west(config)#hw-module location 0/2 mxponder trunk-rate 4
400G  450G
RP/0/RP0/CPU0:west(config)#hw-module location 0/2 mxponder trunk-rate 400G
```

```
RP/0/RP0/CPU0:west(config)#hw-module location 0/2 mxponder client-rate 400GE

RP/0/RP0/CPU0:west(config)#commit
```

2. Run these commands to configure the 2-QDD-C card in muxponder slice mode. Set the slice number, client rate, and trunk rate as required.
   - **hw-module location** *location* **mxponder-slice** *mxponder-slice-number* **client-rate { 100GE | 400GE}**
   - **hw-module location** *location* **mxponder-slice** *mxponder-slice-number* **trunk-rate** { **100G** | **200G** | **300G** | **400G**}

Example

This is a sample in which the card is configured in the muxponder slice 0 mode with a 400G trunk rate.

```
RP/0/RP0/CPU0:ios#config
RP/0/RP0/CPU0:ios(config)#hw-module location 0/1 mxponder-slice 0 client-rate
 100GE
RP/0/RP0/CPU0:ios(config)#hw-module location 0/1 mxponder-slice 0 trunk-rate
 400G
RP/0/RP0/CPU0:ios(config)#commit
```

This is a sample in which the card is configured in the muxponder slice 1 mode with a 400G trunk rate.

```
RP/0/RP0/CPU0:ios#config
RP/0/RP0/CPU0:ios(config)#hw-module location 0/1 mxponder-slice 1 client-rate
 100GE
RP/0/RP0/CPU0:ios(config)#hw-module location 0/1 mxponder-slice 1 trunk-rate
 400G
RP/0/RP0/CPU0:ios(config)#commit
```

The 2-QDD-C card is configured in the specified muxponder or muxponder slice mode with the defined client and trunk rates.

Configure mixed client traffic mode

Use this procedure to configure the client traffic mode on each trunk in a line card independently, allowing a single line card to carry both OTN and Ethernet client traffic simultaneously across different slices.

Use this task to configure the client traffic mode on each trunk in a line card independently. This provides flexibility for the same card to carry both OTN and Ethernet client traffic at the same time across two slices.

100G, 200G, and 300G trunk rates are supported on both slices (slice 0 and slice 1) with different client modes, including 100GE and OTU4.

From Release 7.10.1, you can configure both Ethernet and OTU interfaces on different client ports for each trunk in the 2-QDD-C line card. This enhancement allows the same line card to carry both OTN and Ethernet client traffic at the same time in a single slice for each trunk rate.

An additional 400G trunk rate is supported on both slices (slice 0 and slice 1) with different client modes, such as 100GE and OTU4.

Procedure

1. Run these commands to configure the card for mixed client traffic mode with different slices (slice 0 and slice 1).
   - **hw-module location** *location* **mxponder-slice** *mxponder-slice-number* **trunk-rate** {**100G** | **200G** | **300G** | **400G**| }
   - **hw-module location** *location* **mxponder-slice** *mxponder-slice-number* **client-rate** { | **OTU4** | **100GE**}

   Example

   This is a sample in which the card is configured with mixed client rates in the muxponder slice 0 and 1 mode.

```
RP/0/RP0/CPU0:ios#configure
Mon Mar 23 06:10:22.227 UTC
RP/0/RP0/CPU0:ios(config)#hw-module location 0/1 mxponder-slice 0 client-rate
 OTU4 trunk-rate 400G
RP/0/RP0/CPU0:ios(config)#hw-module location 0/1 mxponder-slice 1 client-rate
 100GE trunk-rate 400G
RP/0/RP0/CPU0:ios(config)#commit
```

   This is a sample configuration of the mixed client traffic mode in different slices.

```
hw-module location 0/0
 mxponder-slice 0
  trunk-rate 400G
  client-rate OTU4
 !
 mxponder-slice 1
  trunk-rate 400G
  client-rate 100GE
 !
!
```

   This is a sample configuration in which both the slices use the same client mode.

```
hw-module location 0/3
 mxponder
  trunk-rate 350G
  client-rate 100GE
 !
!
```

2. Run the **show hw-module** *location* **mxponder** command to verify the card configuration.

   Example

   This is a sample to verify the mixed client traffic mode in different slices.

```
Location:             0/0
Slice ID:             0
Client Bitrate:       OTU4
Trunk  Bitrate:       400G
Status:               Provisioned
Client Port                    Peer/Trunk Port           CoherentDSP0/0/0/0

                                Traffic Split Percentage
```

```
OTU40/0/0/2                     ODU40/0/0/0/1                       100
OTU40/0/0/3                     ODU40/0/0/0/2                       100
OTU40/0/0/4                     ODU40/0/0/0/3                       100
OTU40/0/0/5                     ODU40/0/0/0/4                       100


Location:             0/0
Slice ID:             1
Client Bitrate:       100GE
Trunk  Bitrate:       400G
Status:               Provisioned
Client Port                     Peer/Trunk Port           CoherentDSP0/0/0/1

                                Traffic Split Percentage
HundredGigECtrlr0/0/0/6         ODU40/0/0/1/1                          100
HundredGigECtrlr0/0/0/7         ODU40/0/0/1/2                          100
HundredGigECtrlr0/0/0/8         ODU40/0/0/1/3                          100
HundredGigECtrlr0/0/0/9         ODU40/0/0/1/4                          100
```

This is a sample to verify both the slices using the same client mode.

```
RP/0/RP0/CPU0:ios#show hw-module location 0/3 mxponder
Fri Nov 26 12:21:16.174 UTC

Location:             0/3
Client Bitrate:       100GE
Trunk  Bitrate:       350G
Status:               Provisioned
LLDP Drop Enabled:    FALSE
ARP Snoop Enabled:    FALSE
Client Port                     Mapper/Trunk Port         CoherentDSP0/3/0/0
   CoherentDSP0/3/0/1
                                Traffic Split Percentage

HundredGigECtrlr0/3/0/2         ODU40/3/0/0/1                         100
                     0
HundredGigECtrlr0/3/0/3         ODU40/3/0/0/2                         100
                     0
HundredGigECtrlr0/3/0/4         ODU40/3/0/0/3                         100
                     0
HundredGigECtrlr0/3/0/5         ODU40/3/0/0/4                          50
                    50
HundredGigECtrlr0/3/0/6         ODU40/3/0/1/1                           0
                   100
HundredGigECtrlr0/3/0/7         ODU40/3/0/1/2                           0
                   100
HundredGigECtrlr0/3/0/8         ODU40/3/0/1/3                           0
                   100
```

3. Run this command to configure the card for mixed client traffic mode in the same slice.
   - **hw-module location** *location* **mxponder-slice** *mxponder-slice-number* **trunk-rate** {**100G** | **200G** | **300G** | **400G**|}

Example

This is a sample in which the card is configured with mixed client rates in the muxponder slice 0 mode.

```
RP/0/RP0/CPU0:ios#configure
```

```
Mon Mar 23 06:10:22.227 UTC
RP/0/RP0/CPU0:ios(config)#hw-module location 0/1 mxponder-slice 0
client-port-rate 2 client-type OTU4 trunk-rate 400G
RP/0/RP0/CPU0:ios(config)#hw-module location 0/1 mxponder-slice 0
client-port-rate 3 client-type 100GE trunk-rate 400G
RP/0/RP0/CPU0:ios(config)#commit
```

This is a sample configuration of the mixed client port rate in same slice.

```
hw-module location 0/0
 mxponder-slice 0
  trunk-rate 200G
  client-port-rate 2 client-type 100G
  client-port-rate 3 client-type otu4
 !
 mxponder-slice 1
  trunk-rate 400G
  client-port-rate 4 client-type 100G
  client-port-rate 8 client-type otu4
 !
!
```

2.4T and 2.4TX card modes

This section explains the characteristics and configuration modes for 2.4T and 2.4TX line cards , including trunk and client mappings, data rates, and muxponder modes.

This section helps you familiarize with the different card modes available in the 2.4T and 2.4TX cards , their corresponding data rates, baud rate of each data rate, and the step-by-step procedure to configure line card in muxponder modes with the QDD-4x100GE and QDD-400GE pluggables.

Available card modes

The 2.4T and 2.4TX line cards have two trunk ports (0 and 7) and six client ports (from 1 to 6) each. You can configure the line card in:

- Muxponder slice: You can configure each trunk port independent of the other with different trunk rates. The client-to-trunk mapping is fixed. For Trunk 0, the client ports are 1 to 3. For Trunk 7, the client ports are 4 to 6.
- Muxponder: You can configure both trunk ports with the same trunk rate. The client-to-trunk mapping is fixed.

> **Note**
>
> The 2.4T card does not support muxponder mode.

2.4T and 2.4TX card trunk pluggables and datarates

This section explains the types of card trunk pluggables supported for 2.4T and 2.4TX line cards cards and their associated data rates and frequency ranges.

Coherent Interconnect Module 8

The 2.4T and 2.4TX cards support Coherent Interconnect Module 8 (CIM8) pluggables as trunk pluggables.

The Coherent Interconnect Module 8 (CIM8) is a pluggable, high-capacity multi-haul transceiver. The module can operate at line rates between 400G and 1200G in 100G increments. It utilizes a single optical carrier for both C-band and L-band operations.

CIM8-C-K9

CIM8-C-K9 is the C-band Coherent Interconnect module 8.

The frequency range supported on a 50 GHz or 100 MHz flex grid is from 1912500 to 1961000. Any frequency outside this range will trigger a "Port Pluggable Module Mismatched With Pre-Provisioned PPM" alarm, causing the link to go down.

From R25.3.1, there is no default frequency for the CIM8-C-K9. You must configure the frequency for the laser to be turned on.

CIM8-CE-K9

CIM8-CE-K9 includes a pre-amplifier (EDFA).

The frequency range supported on a 50 GHz or 100 MHz flex grid is from 1912500 to 1961000. Any frequency outside this range will trigger a "Port Pluggable Module Mismatched With Pre-Provisioned PPM" alarm, causing the link to go down.

Due to the inclusion of the pre-amplifier, the optical performance is enhanced compared to the CIM8-C-K9, enabling longer reach. From R25.3.1, there is no default frequency for the CIM8-CE-K9. You must configure the frequency for the laser to be turned on.

CIM8-LE-K9

This variant of the CIM8 supports the L-band spectrum and includes a pre-amplifier (EDFA).

The frequency range supported on a 100 MHz flex grid is from 1861500 to 1909250.Any frequency outside this range triggers a "Port Pluggable Module Mismatched With Pre-Provisioned PPM" alarm, causing the link to go down.

From R24.3.1 and later releases, if a C-band CIM8 is replaced with an LE CIM8 and the frequency is configured within the specified range, the traffic should resume seamlessly.

Note

From R25.3.1, there is no default frequency for any CIM8 pluggables. You must configure the frequency for the laser to be turned on.

If data path is configured and default frequency is not configured on a port, then `Mandatory Configuration Missing` alarm is raised on that optics port.

PID	Frequency range supported
CIM8-C-K9	1912500 to 1961000
CIM8-CE-K9	1912500 to 1961000
CIM8-LE-K9	1861500 to 1909250

This table shows the different pluggables and datarates that each pluggable supports.

PID	Cards supported	Supported rates
CIM8-C-K9	2.4T and 2.4TX	400G, 500G, 600G, 700G, 800G, 900G, 1000G, 1100G, 1200G
CIM8-CE-K9	2.4TX	400G, 500G, 600G, 700G, 800G, 900G, 1000G, 1100G, 1200G
CIM8-LE-K9	2.4TX	400G, 500G, 600G, 700G, 800G, 900G, 1000G

QPSK modulation in CIM8 pluggables for 400G trunk rate

This section explains how QPSK modulations are used in CIM8 pluggables for 400G trunk rates.

QPSK modulation in CIM8 pluggables refers to a line-side signal configuration.

Until Release 25.2.1, the CIM8 pluggable supported only the PCS-based modulation format for line-side configurations. This format was enabled by default and could not be changed by the user. For a 400G trunk rate, the default setting is 128 GBd with PCS modulation.

From Release 25.3.1, CIM8 pluggables on the NCS1K4-2.4T-K9, NCS1K14-2.4T-X-K9, NCS1K14-2.4TXL-K9 and NCS1K14-2.4T-L-K9 cards support 400G QPSK modulation. When the user configures the baud rate to 118 GBd for a trunk rate of 400G, the system automatically selects QPSK modulation.

Table 24: Feature History

Feature Name	Release Information	Description
QPSK modulation support for 400G trunk rate	Cisco IOS XR Release 25.3.1	The NCS1K4-2.4T-K9, NCS1K14-2.4T-X-K9, NCS1K14-2.4TXL-K9, and NCS1K14-2.4T-L-K9 cards now support QPSK modulation configuration for 400G trunk rate on CIM8 pluggables at a baud rate of 118 GBd. This enhancement delivers improved performance and extended reach for long-distance and subsea applications.

Verify QPSK modulation in CIM8 pluggables

Use this procedure to verify that QPSK modulation is correctly enabled and functioning on CIM8 pluggables using the CLI.

You can confirm that QPSK modulation is correctly enabled and functioning on the CIM8 pluggables.

Procedure

Run the **show controller** *controllertype R/S/I/P* command to verify the QPSK modulation on the CIM8 pluggables for baud rate 118.

Example

```
RP/0/RP0/CPU0:NE2063#show controllers optics 0/2/0/0
Wed Aug 13 08:59:58.896 UTC
 Controller State: Up
 Transport Admin State: In Service
```

```
 Laser State: On
 LED State: Green
 Last link flapped: 00:13:23

 Optics Status
         Optics Type:  CIM8 DWDM
         DWDM carrier Info: C BAND, MSA ITU Channel=1, Frequency=196.10THz,
         Wavelength=1528.773nm

         Alarm Status:
         -------------
         Detected Alarms: None
         LOS/LOL/Fault Status:
         Alarm Statistics:
         -------------
         HIGH-RX-PWR = 0            LOW-RX-PWR = 2
         HIGH-TX-PWR = 0            LOW-TX-PWR = 1
         HIGH-LBC = 0               HIGH-DGD = 0
         OOR-CD = 0                 OSNR = 3
         WVL-OOL = 0                MEA  = 0
         IMPROPER-REM = 0
         TX-POWER-PROV-MISMATCH = 0
         Laser Bias Current = 0.0 %
         Actual TX Power = 2.01 dBm
         RX Power = 1.28 dBm
         RX Signal Power = 1.35 dBm
         Frequency Offset = -61 MHz

         Performance Monitoring: Enable

         THRESHOLD VALUES
         ----------------
         Parameter                 High Alarm  Low Alarm  High Warning  Low
Warning
         ------------------------  ----------  ---------  ------------
-----------
         Rx Power Threshold(dBm)         13.0      -25.0           0.0
   0.0
         Tx Power Threshold(dBm)          5.0      -13.0           0.0
   0.0
         LBC Threshold(mA)                N/A        N/A          0.00
  0.00

         LBC High Threshold = 90 %
         Configured Tx Power = 2.00 dBm
         Configured CD High Threshold = 600000 ps/nm
         Configured CD lower Threshold = -600000 ps/nm
         Configured OSNR lower Threshold = 14.50 dB
         Configured DGD Higher Threshold = 103.00 ps
         Baud Rate =  118.7111970000 GBd
         Bits per Symbol = 2.0000000000  bits/symbol
         Modulation Type: QPSK
         Chromatic Dispersion -1 ps/nm
         Configured CD-MIN -10000 ps/nm  CD-MAX 90000 ps/nm
         Polarization Mode Dispersion = 0.0 ps
         Second Order Polarization Mode Dispersion = 40.00 ps^2
         Optical Signal to Noise Ratio = 40.00 dB
         SNR = 19.30 dB
         Polarization Dependent Loss = 1.40 dB
         Polarization Change Rate = 0.00 rad/s
         Differential Group Delay = 2.00 ps
         Filter Roll Off Factor : 0.100
```

```
         Rx VOA Gain Offset : 0.00 dB
         NLEQ Compensation Mode : 0
         Cross Polarization Gain Mode : 10
         Proprietary Submarine Parameters
           Type : 1        Value : 0
           Type : 2        Value : 0
           Type : 3        Value : 0
           Type : 4        Value : 0
           Type : 5        Value : 10485760
           Type : 6        Value : 0
 Transceiver Vendor Details
         Form Factor            : CIM8
         Name                   : CISCO-ACACIA
         Part Number            : 10-100471-02
         Rev Number             : A0
         Serial Number          : ACA29160037
         PID                    : CIM8-C-K9
         VID                    : V02
         Firmware Version       : Major.Minor.Build
         Active                 : 80.140.8
         Inactive               : 80.130.21
         Date Code(yy/mm/dd)    : 25/04/10
         Fiber Connector Type: LC
         Otn Application Code: Not Set
         Sonet Application Code: Not Set
         Ethernet Compliance Code: Not set
 Transceiver Temperature : 38 Celsius

 AINS Soak                : None
 AINS Timer               : 0h, 0m
 AINS remaining time      : 0 seconds

RP/0/RP0/CPU0:NE2063#
```

Muxponder slice mode for 2.4T and 2.4TX cards

This section explains how muxponder slice modes partition 2.4T and 2.4TX line cards into independent functional units to optimize trunk and client port utilization.

This section details the slice and ports supported on the 2.4T and 2.4TX cards.

The line card is divided into two slices, namely, Slice 0 and Slice 1. Each slice contains a trunk port and three client ports. In this mode, the trunk ports operate independently, carrying different data rates. The slices enable the card to function as two different modules. For example, if you set the trunk as 400 G for Slice 0 and 600 G for Slice 1, then Trunk 0 delivers 400 G and Trunk 7 delivers 600 G.

Figure 4: 2.4T lne card slices and ports

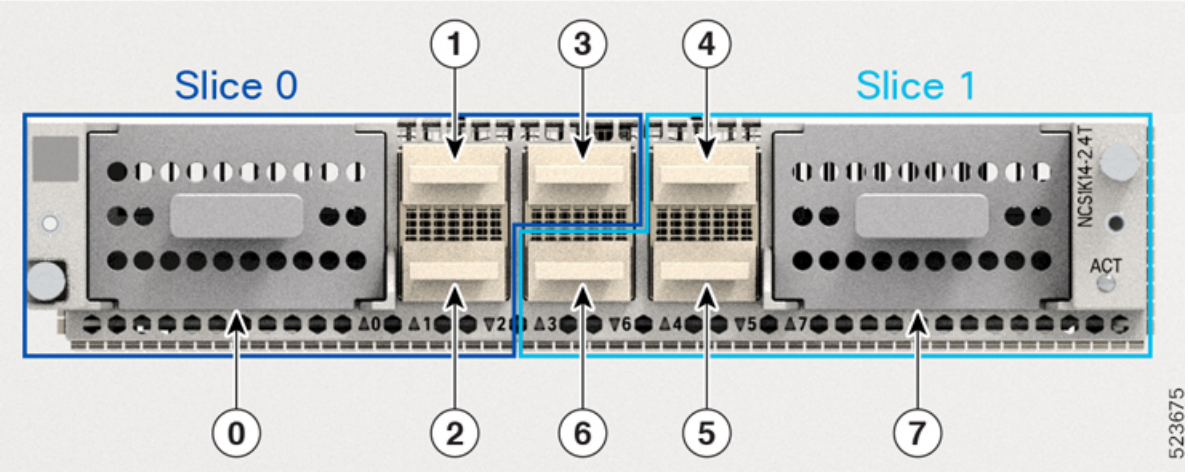

2.4TX

Figure 5: line card slices and ports

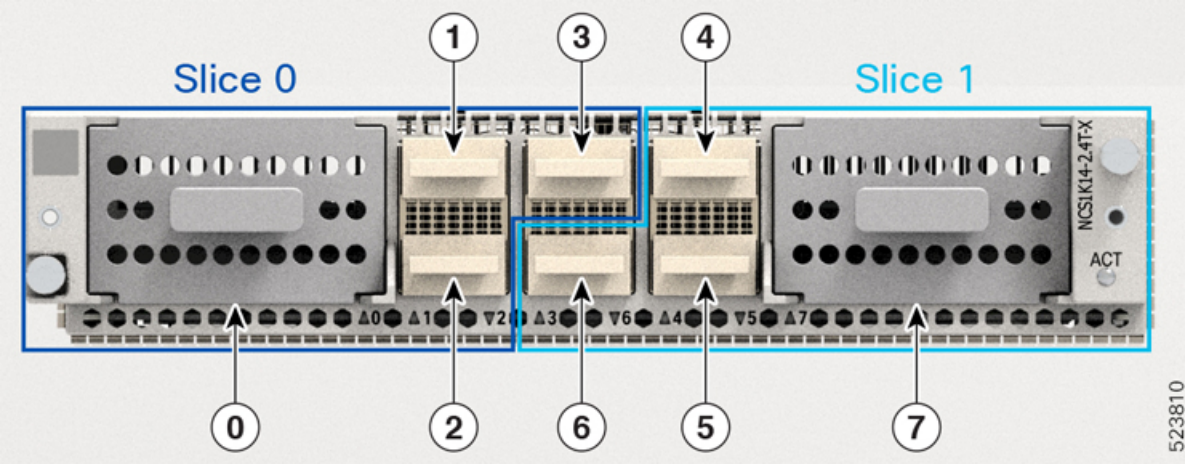

Table 25: Client-to-trunk mapping in slice 0 and slice 1 modes

Slice 0		Slice 1	
Trunk port	**Client ports**	**Trunk port**	**Client ports**
0	1, 2, 3	7	4, 5, 6

Data rate capabilities for 2.4T and 2.4TX cards in muxponder slice mode

This section lists the trunk data rates supported by 2.4T and 2.4TX line cards in muxponder slice mode and the corresponding software releases.

The 2.4T and 2.4TX line cards support various trunk rates.

This table shows the releases from which the 2.4T and 2.4TX cards started supporting each trunk rate.

Table 26: Release-wise trunk rates supported by the 2.4T and 2.4TX cards

Trunk rate (G)	2.4T	2.4TX
400	7.11.1	24.1.1

Trunk rate (G)	2.4T	2.4TX
500	–	24.1.1
600	7.11.1	24.1.1
700	-	24.2.1
800	7.11.1	24.1.1
900	-	24.2.1
1000	7.11.1	24.1.1
1100	-	24.2.1
1200	-	24.1.1

Recommended trunk parameters in the 2.4T and 2.4TX cards

This section lists the recommended baud rate and bit rate ranges for each supported trunk rate in 2.4T and 2.4TX cards.

This section details the baud rate range for each trunk rate in the 2.4T and 2.4TX cards.

Baud rate ranges for each trunk rate in the 2.4T card

The 2.4T card carries signals at different trunk rates, with each trunk rate operating within a baud rate range.

In the *Baud Rate Ranges for Each Trunk Rate in the 2.4T card* table, you can find the recommended baud rate ranges to maintain the signal health for each trunk rate in the network.

Data rate per trunk (G)	Minimum baud rate (GBd)	Maximum baud rate (GBd)
400	43.34518	130.4647
500	49.61196	147.7235
600	59.53435	148.0555
700	69.45674	147.8182
800	79.37913	148.0555
900	89.30152	147.8709
1000	99.22392	148.0555
1100	109.1463	148.2068
1200	119.0687	148.0555

Data rate per trunk (G)	Minimum baud rate (GBd)	Maximum baud rate (GBd)
400	43.34518	130.4647
500	49.61196	147.7235
600	59.53435	148.0555
700	69.45674	147.8182

Data rate per trunk (G)	Minimum baud rate (GBd)	Maximum baud rate (GBd)
800	79.37913	148.0555
900	89.30152	147.8709
1000	99.22392	148.0555
1100	109.1463	148.2068
1200	119.0687	148.0555

Baud rate and bit rate range for each trunk rate in the 2.4TX card

The 2.4TX card carries trunk signals at different data rates. Each trunk data rate operates in a default baud rate. However, you can customize the baud rate within the recommended baud rate range based on your deployment scenario. To customize baud rate, see.

In the *Baud Rate and Bit Rate Range for Each Trunk Rate in the 2.4TX Card* table, you can find the recommended baud rate ranges to maintain the signal health for each trunk rate in the network. The table also features the bit per second information for the respective baud rates.

Table 27: Baud rate and bit rate range for each trunk rate in the 2.4TX card

Trunk data rate per trunk (G)	Minimum baud r ate (GBd)	Maximum baud rate (GBd)	Default baud rate (GBd)	Minimum bit per second (bps)	Maximum bit per second (bps)
400	43.34518	130.4647	127.931418	2.1	4.1
500	49.61196	147.7235	137.8340588	2.5	5
600	59.53435	148.0555	137.738007	2.8	5.1
700	69.45674	147.8182	138.08166	3.2	5
800	79.37913	148.0555	137.978388	3.5	5.1
900	89.30152	147.8709	137.89817	3.8	5.2
1000	99.22392	148.0555	137.834059	4.3	5.3
1100	109.1463	148.2068	137.78165	4.7	5.3
1200	119.0687	148.0555	137.738007	5.3	5.7

Customize baud rates

Use this procedure to configure baud rates on 2.4T and 2.4TX cards operating in muxponder mode to optimize network bandwidth for your deployment scenario.

Customizing baud rates is to enable users to adjust the default baud rates for the 2.4T and 2.4TX cards, particularly when operating in muxponder mode. This customization allows for optimization of network bandwidth based on specific deployment scenarios and ensures that the baud rates align with the available bandwidth in the network.

The muxponder mode enables the 2.4T and 2.4TX cards to carry signals in default baud rates when you set up the trunk rate. However, you can customize the baud rates for each trunk rate based on the bandwidth in the network.

Use this task to customize the baud rates within the recommended range as per your deployment scenario.

Before you begin

- Install these pluggable modules as required.
  - QDD-4x100G
  - QDD-400G
- Enter the Cisco IOS XR configuration mode.

Procedure

1. Locate the trunk optics controller for the 2.4T and 2.4TX cards.

   Example

   ```
   RP/0/RP0/CPU0:ios(config)# controller optics 0/0/0/7
   ```

2. Enter baud rate.

   Example

   ```
   RP/0/RP0/CPU0:ios(config-Optics)# baud-rate 120.0000
   ```

3. Save the changes.

   Example

   ```
   RP/0/RP0/CPU0:ios(config-Optics)#commit
   ```

Client pluggables for configuring muxponder slice modes

This section lists client pluggable combinations required to set up the client rate for each trunk rate in muxponder slice 0 and slice 1.

This section provides details about the client pluggable combinations that you need to set up the client rate for each trunk rate in slice 0 and slice 1.

Pluggable combinations in muxponder slice modes

The client data rates and ports differ for each trunk rate in the muxponder slice 0 (Trunk 0) and muxponder slice 1 (Trunk 1) configurations. However, the type of client pluggable modules stays the same for both slice modes.

Note

The 2x 100 GE client rate is supported only on 2.TX cards.

Table 28: Trunk rate and client pluggable combinations for Slices 0 and Slice 1

Trunk rate (G) per trunk	Card support	Client rate	Client pluggable	Client ports	
				Slice 0	Slice 1
400	2.4T, 2.4TX	2x 100 GE 400 GE	QDD-400G	1	4
		2x 100 GE 4x 100 GE	QDD-4x100G		
500	2.4T, 2.4TX	2x 100 GE 400 GE + 1x 100 GE	QDD-400G + QDD-4x100G	1, 2	4, 5
		5x 100 GE	2x QDD-4x100G		
600	2.4T, 2.4TX	400 GE + 2x 100 GE	QDD-400G + QDD-4x100G	1, 2	4, 5
		6x 100 GE	2x QDD-4x100G		
700	2.4T, 2.4TX	2x 100 GE 400 GE + 3x 100 GE	QDD-400G + QDD-4x100G	1, 2	4, 5
		7x 100 GE	2x QDD-4x100G		
800	2.4T, 2.4TX	2x 100 GE 2x 400 GE	2x QDD-400G	1, 2	4, 5
		400 GE + 4x 100 GE	QDD-400G + QDD-4x100G		
		8x 100 GE	2x QDD-4x100G		
900	2.4T, 2.4TX	2x 100 GE 2x 400 GE + 1x 100 GE	QDD-400G + QDD-4x100G	1, 2, 3	4, 5, 6
		400 GE + 5x 100 GE	QDD-400G + QDD-4x100G		
		9x 100 GE	3x QDD-4x100G		

[1] QDD-400G refers to QDD-400G-FR4-S, QDD-400G-LR4-S, QDD-400G-AOCxM, and QDD-400G-DR4-S pluggable modules.

[2] QDD-4x100G refers to QDD-4X100G-LR-S, QDD-4X100G-FR-S, and QDD-400G-DR4-S pluggable modules.

Trunk rate (G) per trunk	Card support	Client rate	Client pluggable	Client ports	
				Slice 0	Slice 1
1000	2.4T, 2.4TX	2x 100 GE	2x QDD-400G + 2x QDD-4x100G	1, 2, 3	4, 5, 6
		2x 400GE + 2x 100 GE			
		10x 100 GE	3x QDD-4x100G		
1100	2.4TX	2x 100 GE	2x QDD-400G + QDD-4x100G	1, 2, 3	4, 5, 6
		2x 400 GE + 3x 100 GE			
		400 GE + 7x 100 GE	2x QDD-400G + QDD-4x100G		
		11x 100 GE	3x QDD-4x100G		
1200	2.4TX	3x 400 GE	3x QDD-400G	1, 2, 3	4, 5,6
		2x 400 GE + 4x 100 GE	2x QDD-400G + QDD-4x100G		
		400 GE + 8x 100 GE	QDD-400G + 2x QDD-4x100G		
		12x 100 GE	3x QDD-4x100G		
		6x 2X100 GE	6x QDD-2X100-CWDM4-S 6x QDD-2X100-LR4-S	1, 2, 3, 4, 5, 6	–

Make sure you use the appropriate values for client bitrate and trunk bitrate parameters when configuring the Muxponder slide mode using the **hw-module** command.

Set up the client and trunk rate in the muxponder slice mode for 2.4T and 2.4TX cards

Use this procedure to configure client and trunk data rates on 22.4T and 2.4TX cards to optimize network throughput and handle specific client and trunk port configurations.

Set up the client and trunk rate in the muxponder slice mode for the 2.4T and 2.4TX cards to configure these cards to handle specific data rates for both the aggregated trunk and individual client ports.

Use this task to set up the client and trunk rate in the muxponder slice mode for the 2.4T and 2.4TX cards.

This task considers that you are setting up the 600-G data rate in one of the trunk ports of the 2.4T and 2.4TX cards. This scenario requires you to set the client rate for the client ports. Based on the client pluggable that you use, the client rate can change to 400-GE client, 100-GE client, or mixed client.

For more information on the the data rate on each client port, see Client pluggables for configuring muxponder slice modes on page 69 .

Before you begin

- Install these pluggables as required.
  - QDD-400G
  - QDD-4x100G

Procedure

1. Specify the card location.

   Example

   ```
   RP/0/RP0/CPU0:ios(config)#hw-module location 0/1/NXR0
   ```

2. Configure the 2.4T or 2.4TX line card in the muxponder slice mode.

   For Trunk 0 port, enter the `muxponder-slice 0` mode.

   Example

   ```
   RP/0/RP0/CPU0:ios(config)# mxponder-slice 0
   ```

   For Trunk 1 port, enter the `muxponder-slice 1` mode.

   Example

   ```
   RP/0/RP0/CPU0:ios(config)# mxponder-slice 1
   ```

   Note

   You can configure both muxponder slice 0 and slice 1 modes when needed.

   For more information on how to configure muxponder slice mode with QDD-4x100GE and QDD-4x100GE pluggables, see the hw-module command.

3. Set up the trunk rate for the 2.4T or 2.4TX card.

   Example

   ```
   RP/0/RP0/CPU0:ios(config-hwmod-mxp)#trunk-rate 600G
   ```

4. Set up the client rate based on the pluggables that you use.

   For the QDD-400G pluggable, run this command.

   Example

   ```
   RP/0/RP0/CPU0:ios(config-hwmod-mxp)#
   client-port-rate 1 client-type 400GE
   RP/0/RP0/CPU0:ios(config-hwmod-mxp)#
   client-port-rate 2 client-type 400GE
   ```

   For the QDD-4x100G pluggable, run this command.

Example

```
RP/0/RP0/CPU0:ios(config-hwmod-mxp)#
client-port-rate 1 lane 1 client-type 100GE
RP/0/RP0/CPU0:ios(config-hwmod-mxp)#
client-port-rate 1 lane 2 client-type 100GE
RP/0/RP0/CPU0:ios(config-hwmod-mxp)#
client-port-rate 1 lane 3 client-type 100GE
RP/0/RP0/CPU0:ios(config-hwmod-mxp)#
client-port-rate 1 lane 4 client-type 100GE
RP/0/RP0/CPU0:ios(config-hwmod-mxp)#
client-port-rate 2 lane 1 client-type 100GE
RP/0/RP0/CPU0:ios(config-hwmod-mxp)#
client-port-rate 2 lane 2 client-type 100GE
```

Note

Use the **lane** keyword to set up the 100-GE client rate in the client ports.

For the mixed client pluggable, use the combination of the QDD-400G and QDD-4x100G commands.

5. Save the configuration and exit the muxponder slice mode.

Example
Command

```
RP/0/RP0/CPU0:ios(config-hwmod-mxp)#
commit
RP/0/RP0/CPU0:ios(config-hwmod-mxp)#
exit
RP/0/RP0/CPU0:ios(config)#
exit
```

6. Verify the 600-G data rate that you set up.

   This sample shows the 600-G data rate (Trunk Bitrate: 600G) set up in client ports 1 (FourHundredGigECtrlr0/1/0/1) and 2 with breakout lanes 1 and 2 (HundredGigECtrlr0/1/0/2/1 and HundredGigECtrlr0/1/0/2/2) using 400-GE and 100-GE client type pluggables (Client Bitrate: MIXED) in muxponder slice 0 (Slice ID: 0).

Example

```
RP/0/RP0/CPU0:ios#show hw-module location 0/1/NXR0 mxponder-slice 0
Thu Nov 16 15:41:25.720 UTC
Location:             0/1/NXR0
Slice ID: 0 Client Bitrate: MIXED Trunk Bitrate: 600G
Status:               Provisioned
LLDP Drop Enabled:    FALSE
ARP Snoop Enabled:    FALSE
Client Port                     Mapper/Trunk Port         CoherentDSP0/1/0/0
Traffic Split Percentage
FourHundredGigECtrlr0/1/0/1 ODU-FLEX0/1/0/0/1 100
```

```
   HundredGigECtrlr0/1/0/2/1 ODU-FLEX0/1/0/0/2/1 100
   HundredGigECtrlr0/1/0/2/2 ODU-FLEX0/1/0/0/2/2 100
```

This sample shows the 600-G data rate (Trunk Bitrate: 600G) set up in client ports 0 with breakout lanes 1 to 4 (HundredGigECtrlr0/1/0/1/1 to HundredGigECtrlr0/1/0/1/4) and 1 (HundredGigECtrlr0/1/0/2/1) using 100-GE client type pluggable (Client Bitrate: 100GE) in muxponder slice 0 (Slice ID: 0).

Example

```
RP/0/RP0/CPU0:ios#show hw-module location 0/1/NXR0 mxponder-slice 0
Thu Nov 16 16:06:57.575 UTC
Location:             0/1/NXR0
Slice ID: 0 Client Bitrate: 100GE Trunk Bitrate: 600G
Status:               Provisioned
LLDP Drop Enabled:    FALSE
ARP Snoop Enabled:    FALSE
Client Port           Mapper/Trunk Port          CoherentDSP0/1/0/0
Traffic Split Percentage
HundredGigECtrlr0/1/0/1/1 ODU-FLEX0/1/0/0/1/1 100
   HundredGigECtrlr0/1/0/1/2 ODU-FLEX0/1/0/0/1/2 100
   HundredGigECtrlr0/1/0/1/3 ODU-FLEX0/1/0/0/1/3 100
   HundredGigECtrlr0/1/0/1/4 ODU-FLEX0/1/0/0/1/4 100
   HundredGigECtrlr0/1/0/2/1 ODU-FLEX0/1/0/0/2/1 100
   HundredGigECtrlr0/1/0/2/2 ODU-FLEX0/1/0/0/2/2 100
```

Set up 2x100G clients in supported trunk rates in the muxponder slice mode

Use this procedure to configure 2x100G client pluggables to operate in supported trunk rates using muxponder slice mode on supported line cards.

Use this task to set up 2x100G client pluggables in supported trunk rates in the muxponder slice mode on the supported line cards.

For more information on the data rate on each client port, see Client pluggables for configuring muxponder slice modes on page 69.

2x100G payload support on 2.4T and 2.4TX line cards was introduced across multiple releases. The following table lists the supported trunk rates, slices, and line cards.

Release	Support
24.3.1	1200G trunk rate with support on slice 0 only on the 2.4T line card.
25.1.1	800G to 1100G trunk rates with support on slice 0 only on the 2.4T line card.
25.4.1	400G to 600G trunk rates with support on slices 0 and 1 on the 2.4T line card.

Before you begin

- Install either of these pluggables in all 6 client ports.
  - QDD-2X100-CWDM4-S
  - QDD-2X100-LR4-S

Procedure

1. Specify the card location.

   Example

   ```
   RP/0/RP0/CPU0:ios(config)#hw-module location 0/1/NXR0
   ```

2. Configure the line card in the muxponder slice mode.

   For 6x2x100 pluggables in 800G to 1200G trunk modes all client ports are in slice 0. Enter the `muxponder-slice 0` mode.

   Example

   ```
   RP/0/RP0/CPU0:ios(config)#mxponder-slice 0
   ```

3. Set up the trunk rate for the 2.4TX cards.
   These examples show how to set up various trunk rates in the muxponder slice mode.

   Example

   ```
   RP/0/RP0/CPU0:ios(config-hwmod-mxp)#trunk-rate 1200G
   ```

   Example

   ```
   RP/0/RP0/CPU0:ios(config-hwmod-mxp)#trunk-rate 1100G
   ```

   Example

   ```
   RP/0/RP0/CPU0:ios(config-hwmod-mxp)#trunk-rate 1000G
   ```

   Example

   ```
   RP/0/RP0/CPU0:ios(config-hwmod-mxp)#trunk-rate 900G
   ```

   Example

   ```
   RP/0/RP0/CPU0:ios(config-hwmod-mxp)#trunk-rate 800G
   ```

4. Set up the client rate.

   For the 2X100G pluggables, run this command.

   Example

   ```
   RP/0/RP0/CPU0:ios(config-hwmod-mxp)#client-rate 100GE
   ```

5. Save the configuration and exit the muxponder slice mode.

Example

Command

```
RP/0/RP0/CPU0:ios(config-hwmod-mxp)#commit
RP/0/RP0/CPU0:ios(config-hwmod-mxp)#exit
RP/0/RP0/CPU0:ios(config)#exit
```

6. Verify the data rate that you set up.

   This sample shows the 800G data rate set up in the client ports 1, 2, 4, and 5.

   Example

```
RP/0/RP0/CPU0:ios#show hw-module location 0/1/NXR0 mxponder-slice 0

Mon Aug 18 02:11:25.625 UTC

Location:             0/1/NXR0
Slice ID:             0
Client Bitrate:       100GE
Trunk  Bitrate:       800G
Status:               Provisioned
LLDP Drop Enabled:    FALSE
ARP Snoop Enabled:    FALSE
Client Port                     Mapper/Trunk Port          CoherentDSP0/1/0/0

                                 Traffic Split Percentage

HundredGigECtrlr0/1/0/1/1       ODU-FLEX0/1/0/0/1
  100
HundredGigECtrlr0/1/0/1/5       ODU-FLEX0/1/0/0/2
  100
HundredGigECtrlr0/1/0/2/1       ODU-FLEX0/1/0/0/3
  100
HundredGigECtrlr0/1/0/2/5       ODU-FLEX0/1/0/0/4
  100
HundredGigECtrlr0/1/0/4/1       ODU-FLEX0/1/0/0/5
  100
HundredGigECtrlr0/1/0/4/5       ODU-FLEX0/1/0/0/6
  100
HundredGigECtrlr0/1/0/5/1       ODU-FLEX0/1/0/0/7
  100
HundredGigECtrlr0/1/0/5/5       ODU-FLEX0/1/0/0/8
  100
```

   This sample shows the 900G data rate set up in the client ports 1, 2, 3, 4, and 5.

   Example

```
RP/0/RP0/CPU0:ios#show hw-module location 0/1 mxponder-slice 0
Mon Aug 18 02:15:28.412 UTC

Location:             0/1/NXR0
Slice ID:             0
Client Bitrate:       100GE
Trunk  Bitrate:       900G
Status:               Provisioned
```

```
LLDP Drop Enabled:    FALSE
ARP Snoop Enabled:    FALSE
Client Port                     Mapper/Trunk Port          CoherentDSP0/1/0/0

                                 Traffic Split Percentage

HundredGigECtrlr0/1/0/1/1       ODU-FLEX0/1/0/0/1
  100
HundredGigECtrlr0/1/0/1/5       ODU-FLEX0/1/0/0/2
  100
HundredGigECtrlr0/1/0/2/1       ODU-FLEX0/1/0/0/3
  100
HundredGigECtrlr0/1/0/2/5       ODU-FLEX0/1/0/0/4
  100
HundredGigECtrlr0/1/0/3/1       ODU-FLEX0/1/0/0/5
  100
HundredGigECtrlr0/1/0/4/1       ODU-FLEX0/1/0/0/6
  100
HundredGigECtrlr0/1/0/4/5       ODU-FLEX0/1/0/0/7
  100
HundredGigECtrlr0/1/0/5/1       ODU-FLEX0/1/0/0/8
  100
HundredGigECtrlr0/1/0/5/5       ODU-FLEX0/1/0/0/9
  100
```

This sample shows the 1000G data rate set up in up in the client ports 1, 2, 3, 4, and 5.

Example

```
RP/0/RP0/CPU0:ios#show hw-module location 0/1 mxponder-slice 0
Mon Aug 18 02:15:48.811 UTC

Location:             0/1/NXR0
Slice ID:             0
Client Bitrate:       100GE
Trunk  Bitrate:       1000G
Status:               Provisioned
LLDP Drop Enabled:    FALSE
ARP Snoop Enabled:    FALSE
Client Port                     Mapper/Trunk Port          CoherentDSP0/1/0/0

                                 Traffic Split Percentage

HundredGigECtrlr0/1/0/1/1       ODU-FLEX0/1/0/0/1
  100
HundredGigECtrlr0/1/0/1/5       ODU-FLEX0/1/0/0/2
  100
HundredGigECtrlr0/1/0/2/1       ODU-FLEX0/1/0/0/3
  100
HundredGigECtrlr0/1/0/2/5       ODU-FLEX0/1/0/0/4
  100
HundredGigECtrlr0/1/0/3/1       ODU-FLEX0/1/0/0/5
  100
HundredGigECtrlr0/1/0/3/5       ODU-FLEX0/1/0/0/6
  100
HundredGigECtrlr0/1/0/4/1       ODU-FLEX0/1/0/0/7
  100
HundredGigECtrlr0/1/0/4/5       ODU-FLEX0/1/0/0/8
  100
HundredGigECtrlr0/1/0/5/1       ODU-FLEX0/1/0/0/9
```

```
  100
HundredGigECtrlr0/1/0/5/5       ODU-FLEX0/1/0/0/10
  100
```

This sample shows the 1100G data rate set up in 1, 2, 3, 4, 5, and 6 client ports.

Example

```
RP/0/RP0/CPU0:ios#show hw-module location 0/1/NXR0 mxponder-slice 0
Mon Aug 18 02:12:03.291 UTC

Location:             0/1/NXR0
Slice ID:             0
Client Bitrate:       100GE
Trunk  Bitrate:       1100G
Status:               Provisioned
LLDP Drop Enabled:    FALSE
ARP Snoop Enabled:    FALSE
Client Port                     Mapper/Trunk Port          CoherentDSP0/1/0/0

                                 Traffic Split Percentage

HundredGigECtrlr0/1/0/1/1       ODU-FLEX0/1/0/0/1
  100
HundredGigECtrlr0/1/0/1/5       ODU-FLEX0/1/0/0/2
  100
HundredGigECtrlr0/1/0/2/1       ODU-FLEX0/1/0/0/3
  100
HundredGigECtrlr0/1/0/2/5       ODU-FLEX0/1/0/0/4
  100
HundredGigECtrlr0/1/0/3/1       ODU-FLEX0/1/0/0/5
  100
HundredGigECtrlr0/1/0/3/5       ODU-FLEX0/1/0/0/6
  100
HundredGigECtrlr0/1/0/4/1       ODU-FLEX0/1/0/0/7
  100
HundredGigECtrlr0/1/0/4/5       ODU-FLEX0/1/0/0/8
  100
HundredGigECtrlr0/1/0/5/1       ODU-FLEX0/1/0/0/9
  100
HundredGigECtrlr0/1/0/5/5       ODU-FLEX0/1/0/0/10
  100
HundredGigECtrlr0/1/0/6/1       ODU-FLEX0/1/0/0/11
  100
```

This sample shows the 1200G data rate set up in all 12 client ports.

Example

```
RP/0/RP0/CPU0:ios#show hw-module location 0/2/NXR0 mxponder-slice 0
Thu Nov 16 15:41:25.720 UTC
Location:             0/2/NXR0
Slice ID:             0
Client Bit100GE
Trunk  Bitrate:       1200G
Status:               Provisioned
rate:       LLDP Drop Enabled:    FALSE
ARP Snoop Enabled:    FALSE
```

```
Client Port                      Mapper/Trunk Port
CoherentDSP0/2/0/0
                                 Traffic Split Percentage

HundredGigECtrlr0/2/0/1/1       ODU-FLEX0/2/0/0/1
 100
HundredGigECtrlr0/2/0/1/5       ODU-FLEX0/2/0/0/2
 100
HundredGigECtrlr0/2/0/2/1       ODU-FLEX0/2/0/0/3
 100
HundredGigECtrlr0/2/0/2/5       ODU-FLEX0/2/0/0/4
 100
HundredGigECtrlr0/2/0/3/1       ODU-FLEX0/2/0/0/5
 100
HundredGigECtrlr0/2/0/3/5       ODU-FLEX0/2/0/0/6
 100
HundredGigECtrlr0/2/0/4/1       ODU-FLEX0/2/0/0/7
 100
HundredGigECtrlr0/2/0/4/5       ODU-FLEX0/2/0/0/8
 100
HundredGigECtrlr0/2/0/5/1       ODU-FLEX0/2/0/0/9
 100
HundredGigECtrlr0/2/0/5/5       ODU-FLEX0/2/0/0/10
 100
HundredGigECtrlr0/2/0/6/1       ODU-FLEX0/2/0/0/11
 100
HundredGigECtrlr0/2/0/6/5       ODU-FLEX0/2/0/0/12
 100
```

Muxponder mode for 2.4TX card

This section explains how muxponder modes enable wavelength splitting for client ports between two trunk ports on 2.4T and 2.4TX cards.

The muxponder mode enables the 2.4TX card to split wavelengths in specific client ports between the two trunk ports. In the slice mode, the client ports that support wavelength splitting act the same as other client ports. However, in the muxponder mode, the 2.4TX card activates the split client ports. The shared client ports are client port 2 for 600G and client port 3 for 1000G.

How muxponder mode splits 400GE and 4x100GE client traffic

This use case explains the wavelength splitting for 600G trunk rate.

For 600G trunk rate, you must configure client port 1, 2, and 4 as 400GE or 4x100GE. Trunk 0 receives 400GE from port 1. Trunk 7 receives 400GE from port 4. As per split client configuration, port 2 gives 200GE to Trunk 0 and another 200GE to Trunk 7. In this way, both trunk ports deliver 600G trunk rate each.

Recommended connections for point-to-point topology in muxponder mode

This section provides details about the characteristics and configuration considerations for point-to-point topologies when using muxponder mode.

- Connect the port 0 and port 7 in the near end node to their respective port 0 and port 7 in the far end node.
- Make sure the optic fibers connected to trunk ports 0 and 7 are the same length. The difference must be less than 500 m; otherwise, you'll lose traffic on the split port.

Data rate capabilities for the 2.4TX card card

This section lists trunk rate capabilities and release support for the 2.4TX card cards, including feature history and client port compatibility notes.

Table 29: Feature History

Feature Name	Release Information	Description
Additional Muxponder Mode Trunk Rates for the NCS1K14-2.4T-X-K9 Line Card	Cisco IOS XR Release 24.3.1	The NCS1K14-2.4T-X-K9 line card now supports additional trunk rates of 500G and 900G in muxponder mode, enhancing flexibility and optimizing pluggable count alongside the existing 600G and 1000G rates.

To outline the data rate capabilities of the 2.4TX card card.

The 2.4TX card card supports different trunk rates.

Table 30: Release-wise trunk rates supported by the 2.4TX card cards

Trunk rate (G)	Release introduced
500	24.3.1
600	24.1.1
900G	24.3.1
1000G	24.1.1

Note

For 600G and 1000G trunk rates, in R24.1.1, the shared client port supports only 400GE client and from R24.3.1, the shared client port supports both 400GE and 4x100GE clients.

Client pluggables for configuring 2.4TX muxponder mode

This section provides a summary of supported client pluggable modules, combinations, and client rate configurations for the 2.4TX muxponder mode. Lists permissible client pluggables for various trunk and client channel rates

Table 31: Feature History

Feature Name	Release Information	Description
100GE Channel Support for the 600G and 1000G Trunk Rate in NCS1K14-2.4T-X-K9 Muxponder Mode	Cisco IOS XR Release 24.3.1	The NCS1K14-2.4T-X-K9 line card now allows 100G breakout client support for 600G and 1000G trunk rate in muxponder mode. It features 4x100GE breakout channels in shared client ports, enabling easy integration with existing 100G networks using QDD-4X100G-LR-S, QDD-4X100G-FR-S, and QDD-400G-DR4-S pluggable modules. These channels offer high density and bandwidth efficiency without extra costs.

This section provides details about the client pluggable combinations that you need to set up the client rate for each trunk rate.

Client pluggable combinations in muxponder mode

The 2.4TX card muxponder mode supports various trunk rate per trunk with different client pluggable combinations.

> **Note**
>
> From R24.3.1, the 2.4TX card supports 100GE client traffic in the shared client port for both 600G and 1000G trunk rates.

The client channel rate in the table refers to both the total client rate and the client rate per channel in the client ports. For example, **2x 400GE + 2x 100GE** indicates that the client traffic consists of two channels at 400GE each and two channels at 100GE each.

Table 32: 2.4TX card muxponder mode port configurations

Trunk rate (G) per trunk	Total configured trunk rate (G)	Client channel rate	Client pluggable	Shared client port	Client ports
500	1000	2x 400GE + 2x 100GE	2x QDD-400G + 1x QDD-4x100G	2	1, 4
		1x 400GE + 6x 100GE	1x QDD-400G + 2x QDD-4x100G		
		10x 100GE	3x QDD-4x100G		

Trunk rate (G) per trunk	Total configured trunk rate (G)	Client channel rate	Client pluggable	Shared client port	Client ports
600	1200	3x 400GE	3x QDD-400G	2	1, 4
		2x 400GE + 4x 100GE	2x QDD-400G + 1x QDD-4x100G		
		1x 400GE + 8x 100GE	1x QDD-400G + 2x QDD-4x100G		
900	1800	4x 400GE + 2x 100GE	4x QDD-400G + 1x QDD-4x100G	3	1, 2, 4, 5
		3x 400GE + 6x 100GE	3x QDD-400G + 2x QDD-4x100G		
		2x 400GE + 10x 100GE	2x QDD-400G + 3x QDD-4x100G		
		1x 400GE + 14x 100GE	1x QDD-400G + 4x QDD-4x100G		
		18x 100GE	5x QDD-4x100G		
1000	2000	5x 400GE	5x QDD-400G	3	1, 2, 4, 5
		4x 400GE + 4x 100GE	4x QDD-400G + 1x QDD-4x100G		
		3x 400GE + 8x 100GE	3x QDD-400G + 2x QDD-4x100G		
		2x 400GE + 12x 100GE	2x QDD-400G + 3x QDD-4x100G		
		1x 400GE + 16x 100GE	1x QDD-400G + 4x QDD-4x100G		

Understanding client rates per client port for each trunk rate

This table shows the sample client rate per client port for each trunk rate. This simplified matrix helps you understand the traffic flow in each client port. It also indicates the number of channels that each client port uses to deliver the client traffic. The type of pluggable module inserted in the shared client port determines the traffic rate through breakout and non-breakout channels.

You can customize the configuration by mixing and matching the client pluggable modules according to your requirements.

Table 33: Client rate traffic per trunk rate and client pluggable combinations

Trunk rate (G) per trunk	Client pluggable	Client rate (GE) per trunk 0 client ports		Client rate (GE) per shared client ports		Client rate (GE) per trunk 1 client ports		
		1	2	2	3	4	5	6
500	2x QDD-400G + 1x QDD-4x100G	400	-	2x 100	-	400	-	-
	1x QDD-400G + 2x QDD-4x100G	400	-	2x 100 [3]	-	4x 100	-	-
	3x QDD-4x100G	4x 100	-	2x 100 [3]	-	4x 100	-	-
600	3x QDD-400G	400	-	400	-	400	-	-
	2x QDD-400G + 1x QDD-4x100G	400	-	4x 100 [3]	-	400	-	-
	1x QDD-400G + 2x QDD-4x100G + 3x QDD-4x100G	400	-	4x 100 [3]	-	4x 100	-	-
900	4x QDD-400G + 1x QDD-4x100G	400	400	-	2x 100 [3]	400	400	-
	3x QDD-400G + 2x QDD-4x100G	400	400	-	2x 100 [3]	400	4x 100	-
	2x QDD-400G + 3x QDD-4x100G	400	400	-	2x 100 [3]	4x 100	4x 100	-
	1x QDD-400G + 4x QDD-4x100G	400	4x 100	-	2x 100 [3]	4x 100	4x 100	-
	5x QDD-4x100G	4x 100	4x 100	-	2x 100 [3]	4x 100	4x 100	-
1000	5x QDD-400G	400	400	-	400	400	400	-
	4x QDD-400G + 1x QDD-4x100G	400	400	-	4x 100	400	400	-
	3x QDD-400G + 2x QDD-4x100G	400	400	-	4x 100	400	4x 100	-
	2x QDD-400G + 3x QDD-4x100G	400	400	-	4x 100	4x 100	4x 100	-
	1x QDD-400G + 4x QDD-4x100G + 5x QDD-4x100G	400	4x 100	-	4x 100	4x 100	4x 100	-

[3] In this shared port, the pluggable capacity is 400GE or 4x 100GE, but, for this trunk rate, the 2.4TX card card consumes only 2x 100GE client data.

Set up the client and trunk rate in the muxponder mode for the 2.4TX card

Use this procedure to configure client and trunk rates for 2.4TXcards in muxponder mode using QDD-400G and QDD-4x100G pluggable modules.

Use this task to configure a trunk rate in muxponder mode for the 2.4TX card card.

> **Note**
>
> This task considers that you're setting up the 600G trunk rate in the muxponder mode for the 2.4TX card card. The commands and output shown are for 600G trunk rate. The commands and output change for other trunk rates.

This task uses a mix of client pluggable modules. For this task, the card has:

- QDD-4x100G pluggable in shared client port 2, and
- QDD-400G pluggable in client ports 1 and 4

> **Note**
>
> For the 600G trunk rate, the split port supports both 400GE and 4x100GE. For more information on required pluggable modules for other trunk rates, see Client pluggables for configuring 2.4TX muxponder mode on page 80 .

Before you begin

- Install the pluggables as required.
  - QDD-400G
  - QDD-4x100G

Procedure

1. Specify the card location.

   Example

   ```
   RP/0/RP0/CPU0:ios(config)# hw-module location 0/1/NXR0
   ```

2. Enter the muxponder card mode.

   Example

   ```
   RP/0/RP0/CPU0:ios(config-hwmod)#mxponder
   ```

3. Set up the trunk rate.

Example

```
RP/0/RP0/CPU0:ios(config-hwmod-mxp)# trunk-rate 600G
```

4. Set up the client rate for the QDD-400G and QDD-4x100G pluggable modules.

Example

```
RP/0/RP0/CPU0:ios(config-hwmod-mxp)#
client-port-rate 1 client-type 400GE
// QDD-400G pluggable in client port 1
RP/0/RP0/CPU0:ios(config-hwmod-mxp)#
client-port-rate 2 lane 1 client-type 100GE
// Enter lane for the QDD-4x100G pluggable in client port 2
 RP/0/RP0/CPU0:ios(config-hwmod-mxp)#
 client-port-rate 2 lane 2 client-type 100GE
// Enter lane for the QDD-4x100G pluggable in client port 2
  RP/0/RP0/CPU0:ios(config-hwmod-mxp)#
 client-port-rate 2 lane 3 client-type 100GE
// Enter lane for the QDD-4x100G pluggable in client port 2
 RP/0/RP0/CPU0:ios(config-hwmod-mxp)#
 client-port-rate 2 lane 4 client-type 100GE
// Enter lane for the QDD-4x100G pluggable in client port 2
 RP/0/RP0/CPU0:ios(config-hwmod-mxp)#
 client-port-rate 4 client-type 400GE
```

Note

Use the **lane** keyword to set up the 100GE client rate in the client ports.

5. Save the configuration and exit the muxponder mode.

Example

```
RP/0/RP0/CPU0:ios(config-hwmod-mxp)#
commit
RP/0/RP0/CPU0:ios(config-hwmod-mxp)#
exit
// Exits muxponder mode
RP/0/RP0/CPU0:ios(config)#
exit
// Exits configuration moder
```

6. Verify the 600G mixed client rate configured for the 2.4TX card muxponder mode.

   This sample shows the 600G data rate (Trunk Bitrate: 600G) set up in client ports 1 and 4 (FourHundredGigECtrlr0/2/0/1 and FourHundredGigECtrlr0/2/0/4) and split client port 2 with breakout lanes 1 to 4 (HundredGigECtrlr0/2/0/2/1 to HundredGigECtrlr0/2/0/2/4).

Example

```
RP/0/RP0/CPU0:ios# show hw-module location 0/2/NXR0 mxponder
Location:             0/2/NXR0
Client Bitrate: MIXED Trunk Bitrate: 600G
Status:               Provisioned
LLDP Drop Enabled:    FALSE
ARP Snoop Enabled:    FALSE
Client Port                     Mapper/Trunk Port         CoherentDSP0/2/0/0
   CoherentDSP0/2/0/7
Traffic Split Percentage
FourHundredGigECtrlr0/2/0/1     ODU-FLEX0/2/0/0/1
  100                        0

HundredGigECtrlr0/2/0/2/1 ODU-FLEX0/2/0/0/2/1 100 0
HundredGigECtrlr0/2/0/2/2 ODU-FLEX0/2/0/0/2/2 100 0
HundredGigECtrlr0/2/0/2/1 ODU-FLEX0/2/0/7/2/3 0 100
HundredGigECtrlr0/2/0/2/2 ODU-FLEX0/2/0/7/2/4 0 100
FourHundredGigECtrlr0/2/0/4     ODU-FLEX0/2/0/7/4
    0                       100
```

Reset client optics remotely

Use this procedure to configure and run a CLI command to perform a remote cold reset of supported client optics for troubleshooting or management.

Use this procedure to remotely reset client optics with a new CLI exec command. This enables cold reboot options to troubleshoot optics or host platform issues.

Table 34: Feature History Table

Feature Name	Release Information	Description
Remote reset of client optics	Cisco IOS XR Release 25.4.1	You can now remotely reset client optics using a new CLI command and Yang model. This feature allows you to perform cold reboots of optics to resolve issues caused by the host or the optics. Remote power cycling enables more flexible and programmable management of optics. This capability does not apply to CIM 8. Supported optics are: • 400GE • 4x100GE • All QSFP optics • ZR optics, including QDD-ZR, QDD-ZR+, 400G-ZR, and 400G Bright ZR+ CLI: The command `reload transceiver Optics R/S/I/P cold` is introduced. Yang model: The new yang model `Cisco-IOS-XR-reset-optics-act.yang` is introduced.

This procedure enables remote power cycling of optics in response to issues arising from the host platform or the optics. It supports flexible and programmable management through CLI. This feature is supported on the 400GE, 4x100GE, ZR optics, including QDD-ZR, QDD-ZR+, 400G-ZR, and 400G Bright ZR+ optics.

Limitations:

- Warm reloading is not supported.
- CIM-8 pluggables are not supported.

Procedure

Enter the command **reload transceiver optics** *R/S/I/P* **[cold]** to reset the optics for a specific port.

Example

```
RP/0/RP0/CPU0:ios#reload transceiver optics 0/0/0/2 [ cold ]
```

The default is a cold reset, regardless of whether you specify cold or not.

The selected 400GE or 4x100GE optics module is reset remotely, performing a cold reboot as needed for troubleshooting or management.

3 Configuring Controllers

Topics:

- Automatic-In-Service
- Display AINS configuration
- FEC
- Laser squelching
- Hold-off timer
- Idle insertion for ethernet controllers
- FlexO GID and IID
- LLDP Drop
- Link Layer Discovery Protocol (LLDP) support on management interface
- MAC address snooping on client ports
- Transmit shutdown
- Loopback
- Loop-and-drop mechanism on Ethernet controller
- Loop-and-drop mechanism on coherentDSP controller
- Restore factory settings
- Headless mode
- Trail trace identifier
- Configure chromatic dispersion
- Configure transmit power
- Configure laser bias current high threshold
- Configure differential group delay threshold
- Configure optical signal to noise ratio
- Configure receive power threshold
- Frequency
- CCMD-16 controllers
- Configure controller parameters for NCS1K14-CCMD-16-C and NCS1K14-CCMD-16-L cards
- Verify Rx VOA fixed ratio to zero
- Last link flap detection

There are three types of controllers for the line card. The controllers are the optics controller, the ethernet controller, and the coherent DSP controller. This chapter describes the procedures used to configure these controllers.

Automatic-In-Service

This section explains how automatic-in-service features enable controllers to transition to in-service state after maintenance, manage soak times, and suppress alarms.

Automatic-In-Service (AINS) is a controller feature that:

- allows the controller to automatically transition to the in-service state after the maintenance window,
- associates a soak time period with the automatic-in-service (AINS) state, and
- suppresses alarms from propagating to EMS/NMS monitoring systems during the AINS maintenance window.

You can configure AINS on the client ports of the QXP, 1.2T, 2.4T, and 2.4TX cards.

AINS states

This section explains the various Automatic Insertion and Negotiation State (AINS) states for Ethernet and optics controllers and how they transition under different conditions.

If there are any service-affecting alarms when AINS is running on ethernet or optics controllers, the AINS state moves to Pending state. When the alarms are cleared, the AINS state moves to Running state.

The AINS soak time period restarts when there are line card reloads, XR reloads, line card warm reloads, power cycles, or alarm conditioning.

This table lists the AINS states.

State	Description
None	AINS is not enabled on the controller or the soak time period is complete.
Pending	AINS is configured on the controller. However, the soak time period has not started because either the primary state of the controller is in Shutdown, Admin down, or Not ready state or the secondary state is in Maintenance state. AINS can also move to Pending state if alarms are raised during the soak time period.
Running	AINS is enabled on the controller. The primary state of the controller is Up and the secondary state is AINS.

Soak time periods

This section explains how soak time periods suppress alarms and control port transitions in AINS environments.

A soak time period is a port timing parameter that:

- suppresses alarms during the Automatic In Service (AINS) state,
- begins when all optical and Ethernet alarms on the port are cleared, and
- specifies the time before a port transitions from AINS to In Service (IS) state.

You can configure the soak time period to be between 1 minute to 48 hours.

All alarms are suppressed during the AINS state. If optical or Ethernet alarms are raised during the soak time period, the AINS state moves to Pending. These alarms are shown in the output of the `show alarms brief card location 0/RP0/CPU0 conditions` command, not in `show alarms brief card location 0/RP0/CPU0 active`. After all alarms are cleared, the soak time period initiates, and the AINS state moves to Running. When the soak time period expires, the port transitions to the IS state.

Configure Automatic In-Service (AINS)

Use this procedure to configure the Automatic In-Service (AINS) feature–setting the soak time–on a controller, a muxponder slice, or the entire system.

Use this task to enable and set the soak time for Automatic In-Service (AINS) on a controller, a muxponder slice, or globally within the system.

AINS allows specific hardware components or the entire system to automatically transition to an in-service state after a defined soak time and reduces manual intervention.

Procedure

1. Run the **automatic-in-service controller** *controller rate controller* **hours** *hours* **minutes** *minutes* command to configure AINS on a controller.

   Example

   This is a sample to configure AINS globally.

   ```
   RP/0/RP0/CPU0:ios#configure
   RP/0/RP0/CPU0:ios(config)#ains-soak hours 0 minutes 15
   RP/0/RP0/CPU0:ios(config)#commit
   ```

2. Run the **hw-module location** *location* **mxponder-slice** *slice-number* **client-port-ains-soak hours** *hours* **minutes** *minutes* command to configure AINS on a muxponder slice.

   Example

   This example shows how to configure slice 0 client ports with AINS, setting the soak time to 40 minutes.

   ```
   RP/0/RP0/CPU0:ios#configure
   RP/0/RP0/CPU0:ios(config)#hw-module location 0/3/nxr0 mxponder-slice 0
   client-port-ains-soak hours 0 minutes 40
   RP/0/RP0/CPU0:ios(config)#commit
   ```

3. Run the **ains-soak hours** *hours* **minutes** *minutes* command to configure AINS globally.

   Example

   This is a sample to configure AINS globally.

   ```
   RP/0/RP0/CPU0:ios#configure
   RP/0/RP0/CPU0:ios(config)#ains-soak hours 0 minutes 15
   RP/0/RP0/CPU0:ios(config)#commit
   ```

Disable AINS

Use this procedure to configure the slice client ports to disable AINS using CLI commands.

Use this task to disable the AINS on a muxponder slice, which affects all client ports within that slice.

Procedure

1. Run the **hw-module location** *location* **mxponder-slice** *slice-number* **client-port-ains-soak hours** *hours* **minutes** *minutes* command to disable AINS on all muxponder client ports. Set the hours and minutes to 0.

   Example

   This is a sample in which AINS is disabled on all client ports.

```
RP/0/RP0/CPU0:ios#configure
RP/0/RP0/CPU0:ios(config)#hw-module location 0/3/nxr0 mxponder-slice 0
client-port-ains-soak hours 0 minutes 0
RP/0/RP0/CPU0:ios(config)#commit
```

2. Run the **hw-module location** *location* **mxponder-slice** *slice-number* **client-port-ains-soak hours** *hours* **minutes** *minutes*command to disable AINS on a muxponder slice. Set the hours and minutes to 0.

   Example

   This is a sample in which AINS is disabled on all client ports of slice 0.

```
RP/0/RP0/CPU0:ios(config)#hw-module location 0/3/nxr0 mxponder-slice 0
client-port-ains-soak hours 0 minutes 0
RP/0/RP0/CPU0:ios(config)#commit
```

Display AINS configuration

Use this procedure to verify the AINS soak status and timer information for various controller types.

Use this task to view the current AINS configuration status, including the soak state and remaining duration, for various controller types.

The AINS Soak field in the output indicates the current state of AINS. The current state can be None, Pending, or Running. The Total Duration field indicates the total soak time period that is configured. The Remaining Duration field indicates the soak time that remains, after which, the AINS state moves to None.

Before you begin

Procedure

Run the `show controller` command for the desired interface type and location.

Example

This example shows the Ethernet controller statistics with AINS Soak in running state.

```
RP/0/RP0/CPU0:ios#show controller HundredGigECtrlr 0/1/0/2
Thu Feb 21 19:52:55.001 UTC
Operational data for interface HundredGigECtrlr0/1/0/2:
State:
    Administrative state: enabled
```

```
    Operational state: Up
    LED state: Green On
    Maintenance: Disabled

    AINS Soak: Running
    Total Duration: 0 hour(s) 15 minute(s)
    Remaining Duration: 0 hour(s) 5 minute(s) 37 second(s)
    Laser Squelch: Disabled
Phy:
    Media type: Not known
Autonegotiation disabled.
Operational values:
    Speed: 100Gbps
    Duplex: Full Duplex
    Flowcontrol: None
    Loopback: None (or external)
    BER monitoring:
        Not supported
    Holdoff Time: 0ms
```

Example

This example shows the Ethernet controller statistics with AINS Soak in pending state.

```
RP/0/RP0/CPU0:ios#show controllers HuC 0/0/0/2
Thu Mar 12 13:52:12.129 UTC
Operational data for interface HundredGigECtrlr0/0/0/2:
State:
    Administrative state: enabled
    Operational state: Down (Reason: State undefined)
    LED state: Red On
    Maintenance: Disabled
    AINS Soak: Pending
    Total Duration: 0 hour(s) 30 minute(s)
    Remaining Duration: 0 hour(s) 30 minute(s) 0 second(s)
    Laser Squelch: Disabled
Phy:
    Media type: Not known
    Alarms:
        Current:
            Local Fault
    Statistics:
        FEC:
            Corrected Codeword Count: 0
            Uncorrected Codeword Count: 9
Autonegotiation disabled.
Operational values:
    Speed: 100Gbps
    Duplex: Full Duplex
    Flowcontrol: None
    Loopback: None (or external)
    BER monitoring:
        Not supported
    Forward error correction: Standard (Reed-Solomon)
    Holdoff Time: 0ms
```

Example

This example shows the optics controller statistics with AINS Soak in running state.

```
RP/0/RP0/CPU0:ios#show controller optics 0/1/0/3
Thu Feb 21 19:45:41.088 UTC
Controller State: Up
 Transport Admin State: Automatic In Service
 Laser State: On
 LED State: Green
 Optics Status
         Optics Type:  400G QSFP-DD DR4
         Alarm Status:
         -------------
         Detected Alarms: None
         LOS/LOL/Fault Status:
         Alarm Statistics:
         -------------
         HIGH-RX-PWR = 0            LOW-RX-PWR = 0
         HIGH-TX-PWR = 0            LOW-TX-PWR = 0
         HIGH-LBC = 0               HIGH-DGD = 0
         OOR-CD = 0                 OSNR = 0
         WVL-OOL = 0                MEA  = 0
         IMPROPER-REM = 0
         TX-POWER-PROV-MISMATCH = 0
         Performance Monitoring: Enable
         THRESHOLD VALUES
         ----------------

         Parameter                 High Alarm  Low Alarm  High Warning  Low
Warning
         ------------------------  ----------  ---------  ------------
-----------
         Rx Power Threshold(dBm)          4.9      -12.0           0.0
   0.0
         Tx Power Threshold(dBm)          3.5      -10.1           0.0
   0.0
         LBC Threshold(mA)                N/A        N/A          0.00
  0.00

         LBC High Threshold = 98 %
         Polarization parameters not supported by optics

        Total TX Power = 6.39 dBm
        Total RX Power = 5.85 dBm
         Lane  Laser Bias    TX Power    RX Power  Output Frequency
         ----  ----------  ----------  ----------  ----------------
           1      75.0 %    0.59 dBm    0.63 dBm  230.43 THz
           2      68.6 %    0.06 dBm   -0.68 dBm  230.43 THz
           3      69.0 %    0.26 dBm   -0.63 dBm  230.43 THz
           4      69.1 %    0.56 dBm   -0.10 dBm  230.43 THz
 Transceiver Vendor Details
  Form Factor   : QSFP-DD
  Name    : INNOLIGHT
  Part Number   : T-DP4CNT-NGL
  Rev Number   : 1A
  Serial Number   : INLBFI940027
  PID    : T-DP4CNT-NGL
  VID    : 1A
  Date Code(yy/mm/dd)  : 21/08/21
  Fiber Connector Type: MPO
  Otn Application Code: Not Set
```

```
  Sonet Application Code: Not Set
  Ethernet Compliance Code: 400GBASE-DR4
 Transceiver Temperature : 32 Celsius
 AINS Soak                : Running
 AINS Timer               : 0h, 15m
 AINS remaining time      : 771 seconds
```

When the soak time expires, AINS state changes from Running to None. The Transport Admin State of optics controller changes from Automatic In Service to In Service.

```
RP/0/RP0/CPU0:ios# show controllers optics 0/1/0/3
Thu Feb 21 20:02:34.126 UTC
Controller State: Up
 Transport Admin State: In Service
 Laser State: On
 LED State: Green
 Optics Status
         Optics Type:  Grey optics
         Alarm Status:
         -------------
         Detected Alarms: None
         LOS/LOL/Fault Status:
         Alarm Statistics:
         -------------
         HIGH-RX-PWR = 0            LOW-RX-PWR = 0
         HIGH-TX-PWR = 0            LOW-TX-PWR = 0
         HIGH-LBC = 0               HIGH-DGD = 0
         OOR-CD = 0                 OSNR = 0
         WVL-OOL = 0                MEA  = 0
         IMPROPER-REM = 0
         TX-POWER-PROV-MISMATCH = 0
         Performance Monitoring: Enable
         THRESHOLD VALUES
         ----------------

         Parameter                 High Alarm  Low Alarm  High Warning  Low
Warning
         ------------------------  ----------  ---------  ------------
-----------
         Rx Power Threshold(dBm)          4.9      -12.0           0.0
   0.0
         Tx Power Threshold(dBm)          3.5      -10.1           0.0
   0.0
         LBC Threshold(mA)                N/A        N/A          0.00
  0.00
         LBC High Threshold = 98 %
         Polarization parameters not supported by optics
        Total TX Power = 6.41 dBm
        Total RX Power = 5.85 dBm
         Lane  Laser Bias    TX Power    RX Power  Output Frequency
         ----  ----------  ----------  ----------  ----------------
           1      74.9 %    0.60 dBm    0.63 dBm  230.43 THz
           2      68.6 %    0.06 dBm   -0.70 dBm  230.43 THz
           3      69.0 %    0.30 dBm   -0.63 dBm  230.43 THz
           4      69.1 %    0.57 dBm   -0.11 dBm  230.43 THz
 Transceiver Vendor Details
         Form Factor            : QSFP28
         Name                   : CISCO-FINISAR
         Part Number            : FTLC1152RGPL-C2
         Rev Number             : CISCO-FINISAR
         Serial Number          : FNS22150LEC
```

```
        PID                    : QSFP-100G-CWDM4-S
        VID                    : V02
        CISCO-FINISAR
        Date Code(yy/mm/dd)    : 18/04/11
        Fiber Connector Type: LC
        Sonet Application Code: Not Set
        Ethernet Compliance Code: 100GBASE-CWDM4
 Transceiver Temperature : 32 Celsius
 AINS Soak                : None
 AINS Timer               : 0h, 0m
 AINS remaining time      : 0 seconds
```

This example displays the coherentDSP controller statistics with AINS Soak in running state for a 2.4TX card.

```
RP/0/RP0/CPU0:ios#show controllers coherentDSP 0/0/0/7
Port                                          : CoherentDSP 0/0/0/7
Controller State                              : Up
Inherited Secondary State                     : Automatic-In-Service
Configured Secondary State                    : Normal
Derived State                                 : Automatic-In-Service
Loopback mode                                 : None
BER Thresholds                                : SF = 1.0E-5  SD = 1.0E-7
Performance Monitoring                        : Enable
Bandwidth                                     : 800.0Gb/s
Alarm Information:
LOS = 0 LOF = 0 LOM = 0
OOF = 0 OOM = 0 AIS = 0
IAE = 0 BIAE = 0        SF_BER = 0
SD_BER = 0      BDI = 0 TIM = 1
FECMISMATCH = 0 FEC-UNC = 0     FLEXO_GIDM = 1
FLEXO-MM = 0    FLEXO-LOM = 0   FLEXO-RDI = 1
FLEXO-LOF = 1
Detected Alarms                               : None
Bit Error Rate Information
PREFEC  BER                                   : 2.95E-04
POSTFEC BER                                   : 0.00E+00
Q-Factor                                      : 10.70 dB
Q-Margin                                      : 4.40 dB
Instantaneous Q-Margin                        : 4.40 dB
TTI :
        Remote hostname                       : chassisA164
        Remote interface                      : CoherentDSP 0/1/0/7
        Remote IP addr                        : 0.0.0.0
FEC mode                                      : Soft-Decision 15
Flexo-Mode                                    : Enable
Flexo Details:
        Tx GID                                : 1
        TX IID                                : 1, 2, 3, 4, 5, 6, 7, 8,
        Rx GID                                : 1
        RX IID                                : 1, 2, 3, 4, 5, 6, 7, 8,

AINS Soak                                     : Running
AINS Timer                                    : 0h, 20m
AINS remaining time                           : 1196 seconds
```

FEC

This section explains how forward error correction methods add redundancy during data transmission, enabling receivers to detect and correct transmission errors without retransmission.

Forward Error Correction (FEC) is a method for controlling errors during data transmission that:

- adds data redundancy to the transmitted message using an algorithm, and
- enables the receiver to detect and correct a limited number of errors occurring anywhere in the message, thereby eliminating the need for the transmitter to resend the message.

This feature can be enabled on 1.2T and 2.4T cards. FEC is automatically enabled on the pluggables installed in the NCS 1014.

Note

When you upgrade the software of an NCS 1014 with pluggables in the FEC disabled mode, traffic is affected.

FEC states for CoherentDSP controller

This table lists the FEC states for the coherentDSP controllers.

Table 35: FEC state for CoherentDSP controllers

State	Description
EnhancedSD15	FEC Soft-Decision 15. (Default)

Q-Margin support

Q-margin is an important optical parameter that characterizes the health of an optical link. The Q-margin value is calculated based on the average bit error rate (BER) in the optical link.

Enhanced Q-Margin support

Enhanced Q-Margin is supported for Forward Error Correction (FEC) and Performance Monitoring on CoherentDSP controllers for 2.4T cards. Enhanced Q-margin provides a better error free signal in the optical link. The enhanced Q-margin value is calculated based on the maximum number of errors per frame.

An attribute that is called instantaneous Q-margin is displayed in the output of the **show controllers coherentDSP** command. The lower the delta value between the instantaneous Q-margin value with the Q-margin value, the better the FEC performance of the NCS 1014 system.

The instantaneous Q-margin values thus help you to optimize the system with continuous error correction in subsea transport networks.

Configure FEC on the Ethernet controller

Use this procedure to configure Forward Error Correction (FEC) on CoherentDSP Ethernet controllers to improve data integrity and correct transmission errors.

Use this task to configure FEC on the CoherentDSP controller.

Procedure

Run the **controller { HundredGigECtrlr | fourHundredGigECtrlr }** *R/S/I/P* **fec { none | standard }** command.

Example

This sample shows how to configure FEC on the Ethernet controller.

```
RP/0/RP0/CPU0:ios#configure
RP/0/RP0/CPU0:ios(config)#controller HundredGigECtrlr 0/1/0/6/ fec standard
RP/0/RP0/CPU0:ios(config)#commit
```

This sample shows the running FEC configuration on the Ethernet controller.

```
RP/0/RP0/CPU0:BH-SIT2#show controller HundredGigECtrlr 0/1/0/6
Tue Jul 16 15:30:30.165 IST
Operational data for interface HundredGigECtrlr0/1/0/6/2:

State:
    Administrative state: enabled
    Operational state: Down (Reason: State undefined)
    LED state: Red On
    Maintenance: Disabled
    AINS Soak: None
      Total Duration: 0 hour(s) 0 minute(s)
      Remaining Duration: 0 hour(s) 0 minute(s) 0 second(s)
    Laser Squelch: Disabled

Phy:
    Media type: Not known
    Alarms:
        Current:
            Loss of Frequency Sync Data
    Statistics:
        FEC:
            Corrected Codeword Count: 0
            Uncorrected Codeword Count: 0
Autonegotiation disabled.
Operational values:
    Speed: 100Gbps
    Duplex: Full Duplex
    Flowcontrol: None
    Loopback: None (or external)
    BER monitoring:
        Not supported
    Forward error correction: Standard (Reed-Solomon)
    Holdoff Time: 0ms
```

From Release 24.2.11, the **show controllers** command output displays post FEC BER and pre FEC BER for the Ethernet controllers of the 2.4T and 2.4TX cards.

```
RP/0/RP0/CPU0:ios#show controllers fourHundredGigEctrlr 0/1/0/2
Thu Jan 18 18:58:03.846 UTC
Operational data for interface FourHundredGigECtrlr0/1/0/2:
State:
    Administrative state: enabled
    Operational state: Up
    LED state: Green On
```

```
    Maintenance: Disabled
    AINS Soak: None
      Total Duration: 0 hour(s) 0 minute(s)
      Remaining Duration: 0 hour(s) 0 minute(s) 0 second(s)
    Laser Squelch: Disabled
    Insert Idle Ingress: Disabled
    Insert Idle Egress: Disabled
Phy:
    Media type: Not known
    Statistics:
        FEC:
            Corrected Codeword Count: 358543                  Valid: True
    Start time: 18:54:03 Thu Jan 18 2024
            Uncorrected Codeword Count: 0                     Valid: True
    Start time: 18:54:03 Thu Jan 18 2024
        PCS:
            Total BIP errors: 0                               Valid: True
    Start time: 18:54:03 Thu Jan 18 2024
            Total frame errors: 0                             Valid: False
    Start time: 18:54:03 Thu Jan 18 2024
            Total Bad SH: 0                                   Valid: False
    Start time: 18:54:03 Thu Jan 18 2024
Autonegotiation disabled.
Operational values:
    Speed: 400Gbps
    Duplex: Full Duplex
    Flowcontrol: None
    Loopback: None (or external)
    Pre FEC BER: 9.1E-10
    Post FEC BER: 0.0E+00
    BER monitoring:
        Not supported
    Forward error correction: Standard (Reed-Solomon)
    Holdoff Time: 0ms
```

Configure FEC on CoherentDSP controllers

Use this procedure to configure Forward Error Correction (FEC) on a CoherentDSP controller to enhance link reliability.

Use this task to configure FEC on the CoherentDSP controller.

Procedure

Run the **controller coherentDSP** *R/S/I/P* **fec** {**EnhancedSD15**} command.

Example

This sample shows how to configure FEC on the CoherentDSP controller.

```
RP/0/RP0/CPU0:ios#configure
RP/0/RP0/CPU0:ios(config)#controller coherentDSP 0/0/0/0
RP/0/RP0/CPU0:ios(config-CoDSP)#fec EnhancedSD15
Tue Feb 25 11:25:52.670 UTC
```

```
WARNING! Changing FEC mode can impact traffic
RP/0/RP0/CPU0:ios(config-CoDSP)#commit
```

Verify FEC on CoherentDSP controllers

Use this procedure to verify Forward Error Correction (FEC) settings and operational state on CoherentDSP controllers.

This sample shows the FEC configuration on the CoherentDSP controller.

```
RP/0/RP0/CPU0:ios#show controllers coherentDSP 0/0/0/0

Tue Feb 25 11:26:08.235 UTC



Port                                          : CoherentDSP 0/0/0/0
Controller State                              : Up
Inherited Secondary State                     : Normal
Configured Secondary State                    : Normal
Derived State                                 : In Service
Loopback mode                                 : None
BER Thresholds                                : SF = 1.0E-5  SD = 1.0E-7
Performance Monitoring                        : Enable
Bandwidth                                     : 50.0Gb/s
Alarm Information:
LOS = 1 LOF = 0 LOM = 0
OOF = 0 OOM = 0 AIS = 0
IAE = 0 BIAE = 0        SF_BER = 0
SD_BER = 0      BDI = 0 TIM = 0
FECMISMATCH = 0 FEC-UNC = 0
Detected Alarms                               : None
Bit Error Rate Information
PREFEC  BER                                   : 0.00E+00
POSTFEC BER                                   : 0.00E+00
Q-Factor                                      : 0.00 dB
Q-Margin                                      : -5.00dB
Instantaneous Q_margin                       :  0 dB
TTI :
Remote IP addr                                : 0.0.0.0
FEC mode                                      : Soft-Decision 15

AINS Soak                                     : None
AINS Timer                                    : 0h, 0m
AINS remaining time                           : 0 seconds
```

Laser squelching

This section explains how laser squelch mechanisms operate on Ethernet controllers, their benefits in fault handling, and the differences across card types.

You can enable laser squelching on Ethernet controllers. Laser squelching can be enabled on QXP, 1.2T, 2.4T, and 2.4T-X cards which shuts down the laser in the event of trunk faults (LOS, LOF), and a SQUELCHED alarm is raised on the mapped client port.

Laser squelching uses an interrupt based method. Therefore, squelching occurs faster than in previous releases.

Beyond trunk faults, squelching occurs in 1.2T cards, for the client alarms Ingress LF, LOA, and CSF (ingress only).

Configure laser squelching

Use this procedure to configure laser squelch on 1.2T, 2.4T, QXP, OXP2-K9, and 2.4TX optical cards to control laser output during faults or maintenance.

Enable or disable the laser squelch feature for specific optical cards, enhancing operational control and safety.

Laser squelch disables the laser output on designated ports/faults to prevent unwanted signal transmission during error conditions or maintenance.

Procedure

1. Configure laser squelching for the desired card type:

   For 1.2T cards, enter **controller HundredGigECtrlr** *Rack/Slot/Instance/Port/Lane* **laser-squelch** command.

   For 2.4T or 2.4TX cards, enter **controller HundredGigECtrlr** | **controller fourHundredGigECtrlr** *Rack/Slot/Instance/Port/Lane* **laser-squelch** command.

   Example

   This is a sample where laser squelching is enabled on the Ethernet controller of a 2.4T card and a 2.4TX card.

```
RP/0/RP0/CPU0:ios#configure
RP/0/RP0/CPU0:ios(config)#controller fourHundredGigECtrlr 0/1/0/1
RP/0/RP0/CPU0:ios(config-eth-ctrlr)#laser-squelch
RP/0/RP0/CPU0:ios(config-eth-ctrlr)#commit
```

   This is a sample to view the laser squelch status on the controller of a 2.4T card and a 2.4TX card.

   Example

   Note

   In case of muxponder configuration on the 2.4T-X card, and if laser squelch is configured on the split port, whenever a fault is received on any one trunk, the corresponding split port will be squelched.

2. Verify the laser squelch status on the controller of a 2.4T card or a 2.4TX card.

   Example

```
RP/0/RP0/CPU0:ios#show controllers fourHundredGigEctrlr 0/0/0/4
Fri Nov 17 14:26:43.213 UTC
Operational data for interface FourHundredGigECtrlr0/0/0/4:

State:
    Administrative state: enabled
    Operational state: Up
    LED state: Green On
    Maintenance: Disabled
    AINS Soak: Running
```

```
      Total Duration: 0 hour(s) 5 minute(s)
      Remaining Duration: 0 hour(s) 3 minute(s) 34 second(s)
    Laser Squelch: Enabled
    Insert Idle Ingress: Disabled
    Insert Idle Egress: Disabled

Phy:
    Media type: Not known
    Statistics:
        FEC:
            Corrected Codeword Count: 580070472               Valid: False
     Start time: 13:12:29 Fri Nov 17 2023
            Uncorrected Codeword Count: 0                     Valid: False
     Start time: 13:12:29 Fri Nov 17 2023
        PCS:
            Total BIP errors: 0                               Valid: False
     Start time: 13:12:29 Fri Nov 17 2023
            Total frame errors: 0                             Valid: False
     Start time: 13:12:29 Fri Nov 17 2023
            Total Bad SH: 0                                   Valid: False
     Start time: 13:12:29 Fri Nov 17 2023

Autonegotiation disabled.

Operational values:
    Speed: 400Gbps
    Duplex: Full Duplex
    Flowcontrol: None
    Loopback: None (or external)
    BER monitoring:
        Not supported
    Forward error correction: Standard (Reed-Solomon)
    Holdoff Time: 0ms
```

Laser squelching is enabled on the specified optical card(s). The system disables laser output in response to faults or based on maintenance needs.

Hold-off timer

This section describes hold-off times, their function in trunk fault scenarios, and their impact on network stability.

When a fault occurs on the trunk port, you can hold the propagation of local faults using the hold-off time feature. This feature is can be enabled on the Ethernet controllers of 1.2T and 2.4T 1.2T, 2.4T, 2.4Tx, and QXP-K9 1.2T, 2.4T, 2.4Tx, QXP, and 2-QDD-C cards by configuring the hold-off timer.

When the fault occurs on the trunk, idles are inserted in the traffic stream from the trunk port to the client port for the duration of the configured holdoff-time. If the trunk port remains faulty beyond the configured holdoff-time, a local fault is transmitted towards the client device. If the trunk recovers from the fault before the holdoff-time expires, traffic resumes.

This feature can be used on customer deployments to prevent reset of client ports during a PSM switchover.

Configure holdoff-time on QXP Card

Use this procedure to configure the holdoff-time parameter on 100GE and 400GE controllers for the QXP card to control the delay before fault signaling after a trunk fault is detected.

Use this task to configure holdoff-time on 100GE or 400GE controllers for the QXP card.

Procedure

1. Run the **controller HundredGigECtrlr** *Rack/Slot/Instance/Port* **holdoff-time trunk-fault** *time-value* command to configure holdoff-time on the 100GE controllers for the QXP card.

   The range of *timevalue* is from 0 ms to 3000 ms.

   Example

   This is a sample where holdoff-time is enabled on the 100GE controller for the QXP card.

```
RP/0/RP0/CPU0:ios#configure
RP/0/RP0/CPU0:ios(config)#controller HundredGigECtrlr 0/1/0/1
RP/0/RP0/CPU0:ios(config-eth-ctrlr)#holdoff-time trunk-fault 3000
RP/0/RP0/CPU0:ios(config-eth-ctrlr)#commit
```

   Example

   This is a sample to view the holdoff-time status on the 100GE controller.

```
RP/0/RP0/CPU0:ios#show controller hundredGigECtrlr 0/1/0/1
Fri Jul 23 16:07:11.541 UTC
Operational data for interface HundredGigECtrlr0/1/0/1:

State:
    Administrative state: enabled
    Operational state: Up
    LED state: Green On
    Maintenance: Disabled
    AINS Soak: None
      Total Duration: 0 hour(s) 0 minute(s)
      Remaining Duration: 0 hour(s) 0 minute(s) 0 second(s)
    Laser Squelch: Enabled

Phy:
    Media type: Not known
Statistics:
FEC:
Corrected Codeword Count: 134967789
Uncorrected Codeword Count: 0

Autonegotiation disabled.

Operational values:
    Speed: 100Gbps
    Duplex: Full Duplex
    Flowcontrol: None
    Loopback: None (or external)
    BER monitoring:
        Not supported
        Forward error correction: Standard (Reed-Solomon)
    Holdoff Time: 3000ms
```

2. Run the **controller fourHundredGigECtrlr** *Rack/Slot/Instance/Port* **holdoff-time trunk-fault** *time-value* command to configure holdoff-time on the 400GE controllers for the QXP card.

Example

This is a sample where holdoff-time is enabled on the 400GE controller for the NCS1K4-QXP-K9 card.

```
RP/0/RP0/CPU0:ios#configure
RP/0/RP0/CPU0:ios(config)#controller fourHundredGigECtrlr 0/0/0/10
RP/0/RP0/CPU0:ios(config-eth-ctrlr)#holdoff-time trunk-fault 2000
RP/0/RP0/CPU0:ios(config-eth-ctrlr)#commit
```

Example

This is a sample to view the holdoff-time status on the 400GE controller.

```
RP/0/RP0/CPU0:ios#show controller fourhundredGigECtrlr 0/0/0/10
Fri Jul 23 16:07:11.541 UTC
Operational data for interface fourHundredGigECtrlr0/0/0/10:

State:
    Administrative state: enabled
    Operational state: Up
    LED state: Green On
    Maintenance: Disabled
    AINS Soak: None
      Total Duration: 0 hour(s) 0 minute(s)
      Remaining Duration: 0 hour(s) 0 minute(s) 0 second(s)
    Laser Squelch: Enabled

Phy:
    Media type: Not known
Statistics:
FEC:
Corrected Codeword Count: 134967789
Uncorrected Codeword Count: 0

Autonegotiation disabled.

Operational values:
    Speed: 400Gbps
    Duplex: Full Duplex
    Flowcontrol: None
    Loopback: None (or external)
    BER monitoring:
        Not supported
        Forward error correction: Standard (Reed-Solomon)
    Holdoff Time: 2000ms
```

Idle insertion for ethernet controllers

This section explains how idle insertion enables pre-traffic link verification and fault isolation between high-speed Ethernet controllers.

Idle insertion for Ethernet controllers feature allows you to perform end-to-end link verification between 100GE or 400GE or Ethernet controllers before bringing up the actual traffic. This feature enables you to perform pre-provisioning checks to isolate link errors in advance without any Ethernet testers.

> **Note**
>
> OTU4 client rate is not supported.

Idle frames can be inserted in both the ingress and egress directions on Ethernet controllers and the LOCAL-FAULT and REMOTE-FAULT alarms are cleared. The performance monitoring counters on the pcs layer are monitored to check for any errors on the link.

> **Note**
>
> Do not configure the Idle insertion for Ethernet controllers feature on the link that carries live traffic.

Recommended topology for link verification

This diagram describes the recommended topology for link verification.

Figure 6: Topology for link verification

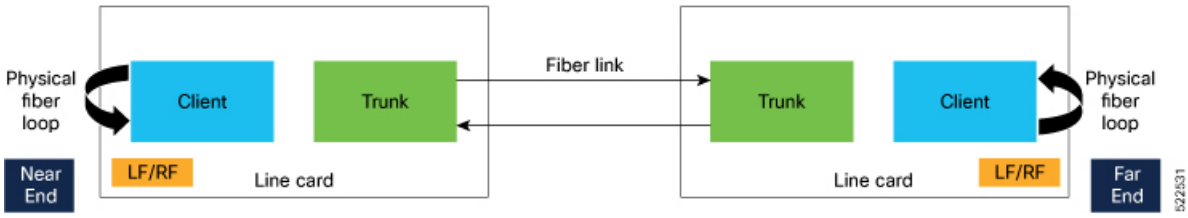

These steps describe the sequence for link verification using this topology:

1. Both the near-end and far-end clients have the LOCAL-FAULT alarm if the trunk is up on both the ends.
2. Enable idle ingress on the near-end client. The idle frame transmits toward the trunk link and reaches the far-end client. The LOCAL-FAULT alarm is then cleared on the far-end client.
3. As the far-end client has fiber loop, the idle frame is inserted again into the same client RX toward the trunk link and reaches the near-end client. The LOCAL-FAULT alarm is then cleared on the near-end client as well.
4. When you enable idle insertion on any client and in any direction, the idle frame transmits in loop similar to this topology and all the LOCAL-FAULT and the REMOTE-FAULT alarms are cleared.
5. The link can be monitored after all the alarms are cleared. The link has a problem if any alarm is reported during the link test.

Configure idle insertion on Ethernet controllers

Use this procedure to configure or disable idle frame insertion for 100GE and 800GE Ethernet controllers using command-line interface

Use this task to configure or disable idle insertion on Ethernet controllers.

> **Note**
>
> Do not configure idle frame insertion with hold-off timer.

Procedure

1. Run the **controller hundredGigECtrlr** *Rack/Slot/Instance/Port/***insert-idle ingressinsert-idle egress** command to enable this feature.

   Example

   This is a sample for enabling the idle ingress and idle egress in 100GE controllers.

```
RP/0/RP0/CPU0:ios#configure
RP/0/RP0/CPU0:ios(config)#controller hundredGigECtrlr 0/2/0/2
RP/0/RP0/CPU0:ios(config-eth-ctrlr)#insert-idle ingress
RP/0/RP0/CPU0:ios(config-eth-ctrlr)#insert-idle egress
RP/0/RP0/CPU0:ios(config-eth-ctrlr)#commit
RP/0/RP0/CPU0:ios(config-eth-ctrlr)#end
```

2. Run the **controller hundredGigECtrlr** *Rack/Slot/Instance/Port***no insert-idle ingressno insert-idle egress** command to disable this feature.

   After disabling the idle frame insertion feature, the LOCAL-FAULT or REMOTE-FAULT alarm may not appear again because the idle frames are in loop. Hence, you must break the idle frame loop in the link by performing either one of the following.

   These are the limitations:

   - Perform fiber OIR on either the near-end or far-end client port.
   - Perform shut and unshut operation on any client port.

Verify idle insertion configuration for Ethernet controllers

Use this procedure to verify the idle frame insertion settings for 100GbE and 800GbE Ethernet controllers using CLI commands.

Use this task to verify idle insertion for Ethernet controllers.

Note

Do not configure idle frame insertion with hold-off timer.

Procedure

Run the **show controllers hundredGigECtrlr** *Rack/Slot/Instance/Port* command to verify the *idle ingress* and *idle egress* that is configured on the Ethernet controllers of a 1.2T card.

Example
This is a sample to verify idle insertion for 800GE controllers.

Example
This is a sample to verify idle insertion for 100GE controllers.

```
RP/0/RP0/CPU0:ios#show controllers hundredGigECtrlr 0/2/0/2
Wed Mar 30 06:56:58.878 UTC
Operational data for interface HundredGigECtrlr0/2/0/2:
State:
    Administrative state: enabled
    Operational state: Up
    LED state: Green On
    Maintenance: Disabled
    AINS Soak: None
      Total Duration: 0 hour(s) 0 minute(s)
      Remaining Duration: 0 hour(s) 0 minute(s) 0 second(s)
    Laser Squelch: Disabled

    Insert Idle Ingress: Enabled
    Insert Idle Egress: Enabled

Phy:
    Media type: Not known
    Statistics:
        FEC:
            Corrected Codeword Count: 0
            Uncorrected Codeword Count: 0
Autonegotiation disabled.
Operational values:
    Speed: 100Gbps
    Duplex: Full Duplex
    Flowcontrol: None
    Loopback: None (or external)
    BER monitoring:
        Not supported
    Forward error correction: Standard (Reed-Solomon)
    Holdoff Time: 0ms
```

FlexO GID and IID

This section explains how FlexO Group Identifiers (GIDs) and Instance Identifiers (IIDs) are used to enable flexible, scalable, and efficient transport of OTU signals on trunk ports.

The 2.4T and 2.4TX cards use are equipped with flexible OTN (flexO) interfaces on their trunk ports. These flexO interfaces enable the efficient and interoperable transport of OTU signals by aggregating multiple standard lower-rate interfaces.

Each group of flexO interfaces is assigned a unique flexO group identification (GID) number, which can range from 1 to 1,048,576. Within each group, individual interfaces are identified by a flexO instance identification (IID) number. Note that the IID for each member is fixed and cannot be modified.

Configure FlexO GID and IID

Use this procedure to configure the FlexO GID and IID settings on the coherentDSP controller using CLI commands for proper operation and monitoring.

Use this task to configure flexO GID and IID on the coherentDSP controller.

Procedure

1. Run the **configure** command to enter the global configuration mode.

   Example

   This sample shows how to configure flexO GID on the CoherentDSP controller.

```
RP/0/RP0/CPU0:ios#configure terminal
Mon Feb  5 05:14:42.919 UTC
RP/0/RP0/CPU0:ios(config)#controller coherentDSP 0/0/0/0
RP/0/RP0/CPU0:ios(config-CoDSP)#flexo gid 1048575
RP/0/RP0/CPU0:ios(config-CoDSP)#commit
```

2. Run the **show controllers** command to verify the configuration.

   Example

   This sample shows the flexO GID configuration on the CoherentDSP controller.

```
RP/0/RP0/CPU0:ios#show controllers coherentDSP 0/0/0/0
Mon Feb  5 05:20:01.660 UTC

Port                                          : CoherentDSP 0/0/0/0
Controller State                              : Up
Inherited Secondary State                     : Normal
Configured Secondary State                    : Normal
Derived State                                 : In Service
Loopback mode                                 : None
BER Thresholds                                : SF = 1.0E-5  SD = 1.0E-7
Performance Monitoring                        : Enable
Bandwidth                                     : 1200.0Gb/s

Alarm Information:
LOS = 1 LOF = 0 LOM = 0
OOF = 0 OOM = 0 AIS = 0
IAE = 0 BIAE = 0        SF_BER = 0
```

```
SD_BER = 0      BDI = 0 TIM = 0
FECMISMATCH = 0 FEC-UNC = 1     FLEXO_GIDM = 0
FLEXO-MM = 0    FLEXO-LOM = 0   FLEXO-RDI = 0
FLEXO-LOF = 0
Detected Alarms                                    : None

Bit Error Rate Information
PREFEC  BER                                        : 1.23E-02
POSTFEC BER                                        : 0.00E+00
Q-Factor                                           : 7.00 dB

Q-Margin                                           : 0.80 dB

Instantaneous Q-Margin                             : 0.80 dB

TTI :
        Remote hostname                            : ios
        Remote interface                           : CoherentDSP 0/0/0/7
        Remote IP addr                             : 0.0.0.0

FEC mode                                           : Soft-Decision 15

Flexo-Mode                                         : Enable
Flexo Details:
        Tx GID                                     : 1
        TX IID                                     : 1, 2, 3, 4, 5, 6, 7, 8, 9,
 10, 11, 12,
        Rx GID                                     : 1
        RX IID                                     : 1, 2, 3, 4, 5, 6, 7, 8, 9,
 10, 11, 12,

AINS Soak                                          : None
AINS Timer                                         : 0h, 0m
AINS remaining time                                : 0 seconds
```

3. Run the **commit** command to apply the changes.

LLDP Drop

This section explains the LLDP drop feature and its impact on supported and unsupported hardware.

Link Layer Discovery Protocol (LLDP) Snooping is enabled by default on all ethernet controllers.

> **Note**
>
> LLDP drop feature is not supported on NCS1K14-2.4T-K9, NCS1K14-2.4T-X-K9, and NCS1K4-QXP-K9 line cards.

Configure LLDP drop

Use this procedure to configure the LLDP drop feature on a muxponder or muxponder slice to control LLDP packet handling.

Use this task to configure the LLDP Drop for a muxponder or muxponder slice. By default, the LLDP drop status is set to False. On enabling the LLDP Drop, the status is set to True.

Procedure

1. Run the **hw-module location** *location* **mxponder drop-lldp** command to configure LLDP drop on a muxponder.

   Example

   ```
   RP/0/RP0/CPU0:ios#configure
   RP/0/RP0/CPU0:ios#hw-module location 0/1 mxponder drop-lldp
   ```

   Note

   Use the **no** form of the command to disable LLDP drop.

   Limitation

   - When you disable LLDP globally, the LLDP gets disabled on all the interfaces.

   Note

   By default, LLDP is enabled for NCS 1014. But when you enable and disable LLDP in the global configuration mode, LLDP gets disabled on all the interfaces.

   Workaround : You must enable LLDP globally or reload the Router.

2. Run the **hw-module location** *location* **mxponder-slice** *slice-number* **drop-lldp** command to configure LLDP drop on a muxponder slice.

   Example

   This sample shows slice 0 client ports enabled with LLDP drop.

   ```
   RP/0/RP0/CPU0:ios#configure
   RP/0/RP0/CPU0:ios(config)#hw-module location 0/1 mxponder-slice 0 drop-lldp
   ```

3. Run the **commit** command to apply the changes.

   Example

   ```
   RP/0/RP0/CPU0:ios#commit
   ```

Verify the LLDP Drop status and LLPD neighbours

Use this procedure to verify the LLDP drop feature and LLDP neighbor information on client controller ports and slices.

Use this task to verify the LLDP drop status and LLDP neighbours status.

Procedure

1. Run the **hw-module location** *location* **mxponder** command to verify the LLDP Drop status.

   Example

```
RP/0/RP0/CPU0:ios#show hw-module location all mxponder
Fri Feb 22 13:22:19.281 UTC
Location:             0/0
Client Bitrate:       NONE
Trunk  Bitrate:       NONE
Status:               Not Provisioned
Location:             0/1
Slice ID:             0
Client Bitrate:       100GE
Trunk  Bitrate:       500G
Status:               Provisioned  LLDP Drop Enabled: FALSE
Client Port                    Mapper/Trunk Port         CoherentDSP0/1/0/0
Traffic Split Percentage
HundredGigECtrlr0/1/0/2/1         ODU40/1/0/0/1/2                     100
HundredGigECtrlr0/1/0/3/2         ODU40/1/0/0/1/4                     100
HundredGigECtrlr0/1/0/4/3         ODU40/1/0/0/2/3                     100
HundredGigECtrlr0/1/0/5/4         ODU40/1/0/0/3/2                     100
HundredGigECtrlr0/1/0/6/4         ODU40/1/0/0/4/1                     100
Location:             0/1
Slice ID:             1
Client Bitrate:       100GE
Trunk  Bitrate:       500G
Status:               Provisioned
LLDP Drop Enabled:    FALSE
Client Port                    Mapper/Trunk Port         CoherentDSP0/1/0/1
Traffic Split Percentage
HundredGigECtrlr0/1/0/1/2         ODU40/1/0/1/1/1                     100
HundredGigECtrlr0/1/0/4/3         ODU40/1/0/1/1/2                     100
HundredGigECtrlr0/1/0/1/3        ODU40/1/0/1/2/3                     100
HundredGigECtrlr0/1/0/3/2        ODU40/1/0/1/3/4                     100
HundredGigECtrlr0/1/0/3/4        ODU40/1/0/1/4/5                     100
Location:             0/2
Slice ID:             0
Client Bitrate:       100GE
Trunk  Bitrate:       500G
Status:               Provisioned
LLDP Drop Enabled: FALSE
Client Port                    Mapper/Trunk Port         CoherentDSP0/2/0/0
Traffic Split Percentage
HundredGigECtrlr0/2/0/2         ODU40/2/0/0/1                     100
HundredGigECtrlr0/2/0/3         ODU40/2/0/0/1                     100
HundredGigECtrlr0/2/0/4         ODU40/2/0/0/2                     100
HundredGigECtrlr0/2/0/5         ODU40/2/0/0/3                     100
HundredGigECtrlr0/2/0/6         ODU40/2/0/0/4                     100
Location:             0/2
Slice ID:             1
Client Bitrate:       100GE
Trunk  Bitrate:       500G
Status:               Provisioned
LLDP Drop Enabled:    FALSE
Client Port                    Mapper/Trunk Port         CoherentDSP0/2/0/1
Traffic Split Percentage
```

```
HundredGigECtrlr0/2/0/1/2         ODU40/2/0/1/0/1                      100
HundredGigECtrlr0/2/0/4/3         ODU40/2/0/1/1/1                      100
HundredGigECtrlr0/2/0/1/2        ODU40/2/0/1/2/2                      100
HundredGigECtrlr0/2/0/3/2        ODU40/2/0/1/3/4                      100
HundredGigECtrlr0/2/0/3/1        ODU40/2/0/1/4/2                      100
Location:             0/3
Slice ID:             0
Client Bitrate:       100GE
Trunk  Bitrate:       300G
Status:               Provisioned
LLDP Drop Enabled: TRUE
Client Port                    Mapper/Trunk Port         CoherentDSP0/3/0/0
Traffic Split Percentage
HundredGigECtrlr0/3/0/2/1         ODU40/3/0/0/0/2                      100
HundredGigECtrlr0/3/0/3/2         ODU40/3/0/0/1/1                      100
HundredGigECtrlr0/3/0/4/1         ODU40/3/0/0/2/3                      100
```

2. Run the **show lldp neighbors detail** and **show lldp neighbors** commands to verify the LLDP neighbor details.

Example

```
RP/0/RP0/CPU0:ios#show lldp neighbors detail
Tue Mar 12 11:49:20.819 IST
Capability codes:
(R) Router, (B) Bridge, (T) Telephone, (C) DOCSIS Cable Device
(W) WLAN Access Point, (P) Repeater, (S) Station, (O) Other
 ------------------------------------------------
Local Interface: HundredGigECtrlr0/1/0/6/4
Chassis id: 008a.96cd.34e1
Port id: Hu0/0/0/4
Port Description - not advertised
System Name: ncs5500_node

System Description:
6.1.4, NCS-5500

Time remaining: 116 seconds
Hold Time: 120 seconds
System Capabilities: R
Enabled Capabilities: R
Management Addresses - not advertised
Peer MAC Address: 00:8a:96:cd:34:10

 ------------------------------------------------
Local Interface: HundredGigECtrlr0/1/0/1/2
Chassis id: 008a.96cd.34e1
Port id: Hu0/0/0/5
Port Description - not advertised
System Name: ncs5500_node

System Description:
6.1.4, NCS-5500
Time remaining: 90 seconds
Hold Time: 120 seconds
System Capabilities: R
Enabled Capabilities: R
Management Addresses - not advertised
Peer MAC Address: 00:8a:96:cd:34:14
```

```
Total entries displayed: 2
```

```
RP/0/RP0/CPU0:ios#show lldp neighbors
Tue Mar 12 16:17:56.713 IST
Capability codes:
(R) Router, (B) Bridge, (T) Telephone, (C) DOCSIS Cable Device
(W) WLAN Access Point, (P) Repeater, (S) Station, (O) Other
Device ID       Local Intf               Hold-time  Capability      Port ID
ncs5500_node    HundredGigECtrlr0/1/0/6/4  120       R              Hu0/0/0/4
ncs5500_node    HundredGigECtrlr0/1/0/1/2 120       R              Hu0/0/0/5


Total entries displayed: 2
```

When you enable LLDP drop on the client controller ports of the muxponder or muxponder slice, the LLDP frames drop on the ports without forwarding.

Note

LLDP on 400GE is not supported on the OTN-XP card.

Link Layer Discovery Protocol (LLDP) support on management interface

This section explains the role and attributes of Link Layer Discovery Protocols (LLDP and CDP) when used on management interfaces, including their advantages, limitations, interoperability, and configuration options.

The LLDP can be configured on management interface of 1.2T, 2.4T, and 2.4TX cards. It requires a system to form LLDP neighborship over the system management interface, through which it advertises and learns LLDP neighbor information. This information about neighbors is used to learn about the neighbors and in turn the topology of the devices for Operations, Administration, and Maintenance (OAM) purposes.

Advantages of LLDP

- Provides support on non-Cisco devices.
- Enables neighbor discovery between non-Cisco devices.

Limitation

- When you disable LLDP globally, the LLDP gets disabled on all the interfaces.

Note

By default, LLDP is enabled for NCS 1014. But when you enable and disable LLDP in the global configuration mode, LLDP gets disabled on all the interfaces.

Workaround : You must enable LLDP globally or reload the Router.

Cisco Discovery Protocol (CDP) vs LLDP

The CDP is a device discovery protocol that runs over Layer 2. Layer 2 is also known as the data link layer that runs on all Cisco devices, such as routers, bridges, access servers, and switches. This protocol allows the network management applications to automatically discover and learn about other Cisco devices that connect to the network.

The LLDP is also a device discovery protocol that runs over Layer 2. This protocol allows the network management applications to automatically discover and learn about other non-Cisco devices that connect to the network.

Interoperability between non-Cisco devices using LLDP

LLDP is also a neighbor discovery protocol that is used by network devices to advertise information about themselves to other devices on the network. This protocol runs over the data link layer, which allows two systems running different network layer protocols to learn about each other.

With LLDP, the user can also access the information about a particular physical network connection. If the user uses a non-Cisco monitoring tool (through SNMP), LLDP helps you identify the Object Identifiers (OIDs) that the system supports. The following OIDs are supported:

- 1.0.8802.1.1.2.1.4.1.1.4
- 1.0.8802.1.1.2.1.4.1.1.5
- 1.0.8802.1.1.2.1.4.1.1.6
- 1.0.8802.1.1.2.1.4.1.1.7
- 1.0.8802.1.1.2.1.4.1.1.8
- 1.0.8802.1.1.2.1.4.1.1.9
- 1.0.8802.1.1.2.1.4.1.1.10
- 1.0.8802.1.1.2.1.4.1.1.11
- 1.0.8802.1.1.2.1.4.1.1.12

Neighbor discovery

System advertises the LLDP TLV (Type Length Value) details over the management network using which other devices in the management network can learn about this device.

Configuring LLDP

- LLDP full stack functionality is supported on all three management interfaces supported in NCS 1014.
- You can selectively enable or disable LLDP on any of the management interfaces on demand.
- You can selectively enable or disable LLDP transmit or receive functionality at the management interface level.
- Information gathered using LLDP can be stored in the device Management Information Database (MIB) and queried with the Simple Network Management protocol (SNMP).
- LLDP operational data are available in both Command Line Interface and netconf-yang interface.

Enabling LLDP globally

When you enable LLDP globally, all interfaces that support LLDP are automatically enabled for both transmit and receive operations.

> **Note**
>
> You can override this default operation at the interface to disable receive or transmit operations.

This table describes the global LLDP attributes that the user can configure:

Table 36: Global LLDP attributes

Attribute	Default	Range	Description
Holdtime	120	0-65535	Specifies the hold time (in sec). Hold time refers to the time or duration that an LLDP device maintains the neighbor information before discarding.
Reinit	2	2-5	Delay (in sec) for LLDP initialization on any interface
Timer	30	5-65534	Specifies the rate at which LLDP packets are sent (in sec)

Debugging LLDP issues

These commands are used for debugging issues in the LLDP functionality.

- **show lldp traffic**
- **debug lldp all**
- **debug lldp errors**
- **debug lldp events**
- **debug lldp packets**
- **debug lldp tlvs**
- **debug lldp trace**
- **debug lldp verbose**

Configure LLDP

Use this procedure to configure the Link Layer Discovery Protocol (LLDP) globally or per management interface on the NCS 1014 system to enable automatic device discovery and management interoperability.

Use this task to configure LLDP globally.

Before you begin

- LLDP full stack functionality is supported on all three management interfaces supported in NCS 1014.
- You can selectively enable or disable LLDP on any of the management interfaces on demand.
- You can selectively enable or disable LLDP transmit or receive functionality at the management interface level.
- Information gathered using LLDP can be stored in the device Management Information Database (MIB) and queried with the Simple Network Management protocol (SNMP).
- LLDP operational data are available in both Command Line Interface and netconf-yang interface.

Procedure

Run the `configure terminal` command to enter the configuration mode.

Example

This example shows the commands to configure LLDP globally. The global LLDP configuration enables LLDP on all the three management interfaces.

```
RP/0/RP0/CPU0:regen#configure terminal
RP/0/RP0/CPU0:regen(config)#lldp management enable
RP/0/RP0/CPU0:regen(config)#lldp holdtime 30
RP/0/RP0/CPU0:regen(config)#lldp reinit 2
RP/0/RP0/CPU0:regen(config)#commit
```

Example

This example shows the commands to configure LLDP at the management interface level.

```
RP/0/RP0/CPU0:ios(config)#interface mgmtEth 0/RP0/CPU0/X
RP/0/RP0/CPU0:ios(config-if)#lldp enable
RP/0/RP0/CPU0:ios(config-if)#commit
```

Example

This example shows the commands to disable the LLDP transmit operations at the specified management interface.

```
RP/0/RP0/CPU0:ios(config)#interface mgmtEth 0/RP0/CPU0/X
RP/0/RP0/CPU0:ios(config-if)#lldp transmit disable
RP/0/RP0/CPU0:ios(config-if)#commit
```

Example

This example shows the commands to disable the LLDP receive operations at the specified management interface.

```
RP/0/RP0/CPU0:ios(config)#interface mgmtEth 0/RP0/CPU0/X
RP/0/RP0/CPU0:ios(config-if)#lldp receive disable
RP/0/RP0/CPU0:ios(config-if)#commit
```

Verify LLDP configuration

Use this procedure to verify the LLDP configuration and status on your device using CLI commands.

Use this task to verify LLDP configuration.

Procedure

1. Run the **show running-config lldp** command to verify the LLDP configuration.

   Example

```
RP/0/RP0/CPU0:regen#show running-config lldp
Tue Dec 10 10:36:11.567 UTC
lldp
timer 30
reinit 2
holdtime 120
management enable
!
```

2. Run the **show lldp interface** and **show lldp neighbors** commands to verify the LLDP data.

   Example

```
RP/0/RP0/CPU0:regen#show lldp interface
Thu Nov  7 08:45:22.934 UTC
MgmtEth0/RP0/CPU0/0:
        Tx: enabled
        Rx: enabled
        Tx state: IDLE
        Rx state: WAIT FOR FRAME
MgmtEth0/RP0/CPU0/1:
        Tx: enabled
        Rx: enabled
        Tx state: IDLE
        Rx state: WAIT FOR FRAME
```

   Example

```
RP/0/RP0/CPU0:M-131#show lldp neighbors
Mon Dec  2 11:01:20.143 CET
Capability codes:
        (R) Router, (B) Bridge, (T) Telephone, (C) DOCSIS Cable Device
        (W) WLAN Access Point, (P) Repeater, (S) Station, (O) Other
Device ID       Local Intf              Hold-time  Capability     Port ID
[DISABLED]      MgmtEth0/RP0/CPU0/0     120        B               gi19
MYS-130         MgmtEth0/RP0/CPU0/1     120        R
MgmtEth0/RP0/CPU0/1
```

   where [DISABLED] shows that the LLDP is disabled on the interface MgmtEth0/RP0/CPU0/0.

   When you enable LLDP drop on the client controller ports of the muxponder or muxponder slice, the LLDP frames drop on the ports without forwarding.

   Note

   LLDP on 400GE is not supported on the OTN-XP card.

MAC address snooping on client ports

This section explains how MAC address snooping features help identify connected neighbors on client ports and overcome networks where LLDP cannot be used.

A MAC address snooping on client ports feature is a network monitoring capability that:

- learns the MAC address of the connected neighbor on 1.2T cards at client ports
- enables ARP snooping across all client ports through CLI, and
- helps overcome environments where LLDP cannot be used for neighbor discovery.

This feature overcomes the limitation, where LLDP (Link Layer Discovery protocol) cannot be enabled in some networks.

Limitations

- When you enable or disable MAC address snooping on any slice, few packets are dropped during configuration.
- Open config interface for enabling or disabling MAC address snooping is not supported.
- SNMP MIB is not supported for the MAC address attribute.

Note

When you enable MAC address snooping on client ports, it overrides LLDP.

Configure MAC address snooping on client ports

Use this task to configure MAC address or ARP snoop on slice in muxponder slice mode.

Procedure

Run the **hw-module location** *location* **mxponder-slice** *slice-number* **client-rate 100GE trunk-rate 600G { 100G | 150G | 200G | 250G | 300G | 350G | 400G | 450G | 500G | 550G | 600G } arp-snoop** command.

Example

This is a sample in which, MAC address or ARP snoop is configured on the client ports of slice 0 in Muxponder slice mode.

```
RP/0/RP0/CPU0:ios#configure
Mon Mar 16 19:30:33.933 UTC
RP/0/RP0/CPU0:ios(config)#hw-module location 0/3/nxr0 mxponder-slice 0
RP/0/RP0/CPU0:ios(config-hwmod-mxp)#client-rate 100GE
RP/0/RP0/CPU0:ios(config-hwmod-mxp)#trunk-rate 600G
RP/0/RP0/CPU0:ios(config-hwmod-mxp)#arp-snoop
RP/0/RP0/CPU0:ios(config-hwmod-mxp)#commit
Mon Mar 16 19:30:52.636 UTC
RP/0/RP0/CPU0:ios(config-hwmod-mxp)#end
```

This is a sample in which, MAC address or ARP snoop is configured in Muxponder mode.

```
RP/0/RP0/CPU0:ios#configure
```

```
Mon Mar 16 19:08:17.154 UTC
RP/0/RP0/CPU0:ios(config)#hw-module location 0/1 mxponder arp-snoop
RP/0/RP0/CPU0:ios(config)#commit
```

This sample shows the output of **show controllers hundredGigEctrlr** command, before configuring MAC address or ARP snoop on client ports.

```
RP/0/RP0/CPU0:ios#show controllers HundredGigECtrlr 0/1/0/2/1
Mon Mar 16 19:40:37.434 UTC
Operational data for interface HundredGigECtrlr0/1/0/2/1:
State:
    Administrative state: enabled
    Operational state: Up
    LED state: Green On
    Maintenance: Disabled
    AINS Soak: None
      Total Duration: 0 hour(s) 0 minute(s)
      Remaining Duration: 0 hour(s) 0 minute(s) 0 second(s)
    Laser Squelch: Disabled
Phy:
    Media type: Not known
Autonegotiation disabled.
Operational values:
    Speed: 100Gbps
    Duplex: Full Duplex
    Flowcontrol: None
    Loopback: None (or external)
    BER monitoring:
        Not supported
    Holdoff Time: 0ms
```

View neighbor MAC address

Use this procedure to verify the neighbor's physical MAC address after enabling MAC address or ARP snoop on client ports.

Use this task to view the neighbor's physical address after enabling MAC address or ARP snoop.

MAC address snoop output is enabled after ARP packets are received on the respective 100G client.

Procedure

Run the **show controllers hundredGigEctrlr** *R/S/I/P* command.

Example

This sample shows the neighbor's MAC address after configuring MAC address or ARP snoop on client ports.

```
RP/0/RP0/CPU0:ios#show controllers HundredGigECtrlr 0/1/0/2/1
Mon Mar 16 19:41:08.047 UTC
Operational data for interface HundredGigECtrlr0/1/0/2/1:
State:
    Administrative state: enabled
    Operational state: Up
    LED state: Green On
    Maintenance: Disabled
```

```
    AINS Soak: None
      Total Duration: 0 hour(s) 0 minute(s)
      Remaining Duration: 0 hour(s) 0 minute(s) 0 second(s)
    Laser Squelch: Disabled
    Neighbor Address:
    0010.9400.5502
Phy:
    Media type: Not known
Autonegotiation disabled.
Operational values:
    Speed: 100Gbps
    Duplex: Full Duplex
    Flowcontrol: None
```

Transmit shutdown

This section explains how transmit shutdown features control and disable optical transmit power on trunk optics controllers.

Transmit shut on trunk optics controller brings down the CIM8 and PICO transmit power. You can configure transmit shut on optics controller of a 1.2T, 2.4TX, or 2.4T card.

Configure transmit shutdown on trunk optics controller

Use this procedure to configure transmit shutdown for a trunk optics controller using CLI commands.

To perform transmit shutdown, enter these commands:

```
RP/0/RP0/CPU0:ios#configure
RP/0/RP0/CPU0:chassisA164(config)#controller optics 0/1/0/0
RP/0/RP0/CPU0:chassisA164(config-Optics)#transmit-shutdown
RP/0/RP0/CPU0:chassisA164(config-Optics)#commit
RP/0/RP0/CPU0:ios(config-Optics)#exit
RP/0/RP0/CPU0:ios(config)#exit
```

Verify transmit shutdown on trunk optics controller

Use this procedure to verify the shutdown state and operational details of the trunk optics controller using the CLI command.

Use this task to verify the transmit shutdown details on the trunk optics controller.

Procedure

Run the **show controllers optics***R/S/I/P* command to view the transmit shutdown details.

Example

```
RP/0/RP0/CPU0:ios#show controllers optics 0/0/0/0
Tue Dec 12 05:38:32.416 UTC
Controller State: Up
Transport Admin State: In Service
Laser State: Off
LED State: Green
```

```
Optics Status
     Optics Type:  CIM8 DWDM
     DWDM carrier Info: C BAND, MSA ITU Channel=61, Frequency=193.10THz,
     Wavelength=1552.524nm

     Alarm Status:
     -------------
     Detected Alarms: None
     LOS/LOL/Fault Status:
     Alarm Statistics:
     -------------
     HIGH-RX-PWR = 0            LOW-RX-PWR = 0
     HIGH-TX-PWR = 0            LOW-TX-PWR = 2
     HIGH-LBC = 0               HIGH-DGD = 0
     OOR-CD = 0                 OSNR = 1
     WVL-OOL = 0                MEA  = 0
     IMPROPER-REM = 0
     TX-POWER-PROV-MISMATCH = 0
     Laser Bias Current = 0.0 %
     Actual TX Power = -40.00 dBm
     RX Power = -6.60 dBm
     RX Signal Power = -7.06 dBm
     Frequency Offset = -846 MHz
     Performance Monitoring: Enable

     THRESHOLD VALUES
     ----------------

     Parameter                High Alarm  Low Alarm  High Warning  Low Warning

    ------------------------  ----------  ---------  ------------  -----------

     Rx Power Threshold(dBm)         13.0      -17.0           0.0
0.0
     Tx Power Threshold(dBm)          5.0      -13.0           0.0
0.0
     LBC Threshold(mA)                N/A        N/A          0.00
0.00

     LBC High Threshold = 90 %
     Configured Tx Power = 2.00 dBm
     Configured CD High Threshold = 180000 ps/nm
     Configured CD lower Threshold = -180000 ps/nm
     Configured OSNR lower Threshold = 20.50 dB
     Configured DGD Higher Threshold = 90.00 ps
     Baud Rate =  137.9783780000 GBd
     Bits per Symbol = 3.5200000000  bits/symbol
     Modulation Type: PCS
     Chromatic Dispersion 0 ps/nm
     Configured CD-MIN -10000 ps/nm  CD-MAX 48000 ps/nm
     Polarization Mode Dispersion = 0.0 ps
     Second Order Polarization Mode Dispersion = 9.00 ps^2
     Optical Signal to Noise Ratio = 36.90 dB
     SNR = 16.10 dB
     Polarization Dependent Loss = 0.90 dB
     Polarization Change Rate = 0.00 rad/s
     Differential Group Delay = 1.00 ps
     Filter Roll Off Factor : 0.100
     Rx VOA Target Power : -2.0 dBm
     NLEQ Compensation Mode : 0
     Cross Polarization Gain Mode : 10
     Proprietary Submarine Parameters
```

```
       Type : 1        Value : 0
       Type : 2        Value : 0
       Type : 3        Value : 0
       Type : 4        Value : 0
       Type : 5        Value : 10485760


  Transceiver Vendor Details

      Form Factor            : CIM8
      Name                   : CISCO-ACACIA
      Serial Number          : N/A
      PID                    : CIM8-C-K9
      VID                    : N/A
      Date Code(yy/mm/dd)    : 23/10/20
      Fiber Connector Type: LC
      Otn Application Code: Not Set
      Sonet Application Code: Not Set
      Ethernet Compliance Code: Not set

  Transceiver Temperature : 38 Celsius

 AINS Soak                : None
 AINS Timer               : 0h, 0m
 AINS remaining time      : 0 seconds
```

Loopback

This section explains loopback interfaces, their usage in network equipment, configuration conditions, and related alarm behaviors.

You can configure loopback on the CoherentDSP and Ethernet controllers of QXP, 1.2T, 2.4TX and 2.4T cards to identify connection problems. The loopback can be configured only in the maintenance mode. Use the **controller *controller-type*** and the **secondary-admin-state maintenance** commands to place the controllers in the maintenance mode.

Loopback configuration alarm details for each controller are triggered whenever there is a change in the loopback configuration. Details such as, location of the controller, severity, configuration date and time, and description are available in the output of the **show alarms brief system active** and **show alarms brief history** commands.

Configure loopback

This section explains loopback interfaces, their usage in network equipment, configuration conditions, and related alarm behaviors.

Use this task to configure loopback on a 1.2T, 2.4T, and 2.4TX card.

Procedure

1. Run the **controller***controllertype Rack/Slot/Instance/Port***sec-admin-state maintenance loopback** [**internal**] command to configure the loopback on a 1.2T card.

Example

This example shows how a internal loopback is configured on the Ethernet controller of a 1.2T card.

```
RP/0/RP0/CPU0:ios#configure
RP/0/RP0/CPU0:ios(config)#controller HundredGigECtrlr 0/1/0/1
RP/0/RP0/CPU0:ios(config-eth-ctrlr)#sec-admin-state maintenance
RP/0/RP0/CPU0:ios(config-eth-ctrlr)#loopback internal
RP/0/RP0/CPU0:ios(config-eth-ctrlr)#commit
RP/0/RP0/CPU0:ios(config)#exit
```

Note

Line loopback is not supported on CoherentDSP controller of 1.2T card.

Example

This example shows how to verify a internal loopback configured on the Ethernet controller of 1.2T card.

```
RP/0/RP0/CPU0:ios#show controller HundredGigECtrlr 0/1/0/1
Fri Nov 17 10:01:22.840 UTC
Operational data for interface HundredGigECtrlr0/1/0/1:

State:
    Administrative state: enabled
    Operational state: Up
    LED state: Green On
    Maintenance: Enabled
    AINS Soak: None
      Total Duration: 0 hour(s) 0 minute(s)
      Remaining Duration: 0 hour(s) 0 minute(s) 0 second(s)
    Laser Squelch: Disabled
    Insert Idle Ingress: Disabled
    Insert Idle Egress: Disabled

Phy:
    Media type: Not known
    Statistics:
        FEC:
            Corrected Codeword Count: 72671614                Valid: True
     Start time: 15:53:12 Thu Nov 16 2023
            Uncorrected Codeword Count: 12                    Valid: True
     Start time: 15:53:12 Thu Nov 16 2023
        PCS:
            Total BIP errors: 0                               Valid: True
     Start time: 15:53:12 Thu Nov 16 2023
            Total frame errors: 0                             Valid: False
     Start time: 15:53:12 Thu Nov 16 2023
            Total Bad SH: 0                                   Valid: False
     Start time: 15:53:12 Thu Nov 16 2023

Autonegotiation disabled.

Operational values:
    Speed: 400Gbps
    Duplex: Full Duplex
```

```
    Flowcontrol: None
    Loopback: Internal
    BER monitoring:
        Not supported
    Forward error correction: Standard (Reed-Solomon)
    Holdoff Time: 0ms
```

2. Run the **controller** {**HundredGigECtrlr** *Rack/Slot/Instance/Port/Lane* | **fourHundredGigECtrlr***Rack/Slot/Instance/Port*}**sec-admin-state maintenance loopback**[**line** | **internal**] command to configure the loopback on 2.4T card and 2.4TX card.

Example

This example shows how a line loopback is configured on coherentDSP controller of a 2.4T card and 2.4TX card.

```
RP/0/RP0/CPU0:ios#configure
RP/0/RP0/CPU0:ios(config)#controller coherentDSP 0/1/0/0
RP/0/RP0/CPU0:ios(config-eth-ctrlr)#sec-admin-state maintenance
RP/0/RP0/CPU0:ios(config-eth-ctrlr)#loopback line
RP/0/RP0/CPU0:ios(config-eth-ctrlr)#commit
RP/0/RP0/CPU0:ios(config)#exit
```

Note

In case of muxponder configuration on the 2.4TX card, internal loopback must be applied on both trunk ports for the loopback behaviour to reflect on the split ports. For direct ports, the corresponding trunk internal loopback works as expected.

Example

This example shows how to configure internal loopback on a coherent DSP controller.

```
RP/0/RP0/CPU0:ios#configure
Fri Jul 8 10:42:51.329 UTC
RP/0/RP0/CPU0:ios(config)#controller coherentDSP 0/0/0/0
RP/0/RP0/CPU0:ios(config-CoDSP)#secondary-admin-state maintenance
RP/0/RP0/CPU0:ios(config-CoDSP)#loopback internal
RP/0/RP0/CPU0:ios(config-CoDSP)#commit
Fri Jul 8 10:43:48.644 UTC
RP/0/RP0/CPU0:ios(config-CoDSP)#end
```

This example shows how to verify the internal loopback configured on a coherent DSP controller.

```
RP/0/RP0/CPU0:ios#show controllers coherentDSP 0/0/0/0
Fri Jul 8 10:45:53.820 UTC
Port : CoherentDSP 0/0/0/0
Controller State : Down
Inherited Secondary State : Normal
Configured Secondary State : Maintenance
Derived State : Maintenance
Loopback mode : Internal
BER Thresholds : SF = 1.0E-5 SD = 1.0E-7
Performance Monitoring : Enable
```

```
Bandwidth : 400.0Gb/s
Alarm Information:
LOS = 2 LOF = 0 LOM = 0
OOF = 0 OOM = 0 AIS = 0
IAE = 0 BIAE = 0 SF_BER = 0
SD_BER = 0 BDI = 0 TIM = 0
FECMISMATCH = 0 FEC-UNC = 0 FLEXO_GIDM = 0
FLEXO-MM = 0 FLEXO-LOM = 0 FLEXO-RDI = 0
FLEXO-LOF = 0
Detected Alarms : LOS
Bit Error Rate Information
PREFEC BER : 5.00E-01
POSTFEC BER : 0.00E+00
Q-Factor : 0.00 dB
Q-Margin : 0.00dB
OTU TTI Received
FEC mode : C_FEC
Flexo-Mode : Enable
Flexo Details:
Tx GID : 0
Rx GID : 0
AINS Soak : None
AINS Timer : 0h, 0m
AINS remaining time : 0 seconds
```

Example

This example shows how to configure line loopback on a coherent DSP controller.

```
RP/0/RP0/CPU0:ios#configure
Fri Jul 8 10:48:48.577 UTC
RP/0/RP0/CPU0:ios(config)#controller coherentDSP 0/0/0/0
RP/0/RP0/CPU0:ios(config-CoDSP)#secondary-admin-state maintenance
RP/0/RP0/CPU0:ios(config-CoDSP)#loopback line
RP/0/RP0/CPU0:ios(config-CoDSP)#commit
Fri Jul 8 10:49:26.809 UTC
RP/0/RP0/CPU0:ios(config-CoDSP)#end
```

This example shows how to verify the line loopback configured on a coherent DSP controller.

```
RP/0/RP0/CPU0:ios#show controllers coherentDSP 0/0/0/0
Fri Jul 8 10:49:44.073 UTC
Port : CoherentDSP 0/0/0/0
Controller State : Down
Inherited Secondary State : Normal
Configured Secondary State : Maintenance
Derived State : Maintenance
Loopback mode : Line
BER Thresholds : SF = 1.0E-5 SD = 1.0E-7
Performance Monitoring : Enable
Bandwidth : 400.0Gb/s
Alarm Information:
LOS = 2 LOF = 0 LOM = 0
OOF = 0 OOM = 0 AIS = 0
IAE = 0 BIAE = 0 SF_BER = 0
SD_BER = 0 BDI = 0 TIM = 0
FECMISMATCH = 0 FEC-UNC = 0 FLEXO_GIDM = 0
FLEXO-MM = 0 FLEXO-LOM = 0 FLEXO-RDI = 0
FLEXO-LOF = 0
Detected Alarms : LOS
Bit Error Rate Information
```

```
PREFEC BER : 5.00E-01
POSTFEC BER : 0.00E+00
Q-Factor : 0.00 dB
Q-Margin : 0.00dB
OTU TTI Received
FEC mode : C_FEC
Flexo-Mode : Enable
Flexo Details:
Tx GID : 0
Rx GID : 0
AINS Soak : None
AINS Timer : 0h, 0m
AINS remaining time : 0 seconds
```

Example

This example shows how to configure internal loopback on the 400GE controller.

```
RP/0/RP0/CPU0:ios#configure
Fri Jul 8 11:19:26.286 UTC
RP/0/RP0/CPU0:ios(config)#controller FourHundredGigECtrlr 0/0/0/3
RP/0/RP0/CPU0:ios(config-eth-ctrlr)#sec-admin-state maintenance
RP/0/RP0/CPU0:ios(config-eth-ctrlr)#loopback internal
RP/0/RP0/CPU0:ios(config-eth-ctrlr)#commit
Fri Jul 8 11:19:47.496 UTC
RP/0/RP0/CPU0:ios(config-eth-ctrlr)#end
```

This example shows how to verify the internal loopback configured on the 400GE controller.

```
RP/0/RP0/CPU0:ios#show controllers FourHundredGigECtrlr 0/0/0/3
Fri Jul 8 11:19:59.597 UTC
Operational data for interface FourHundredGigECtrlr0/0/0/3:
State:
Administrative state: enabled
Operational state: Down (Reason: State undefined)
LED state: Red On
Maintenance: Enabled
AINS Soak: None
Total Duration: 0 hour(s) 0 minute(s)
Remaining Duration: 0 hour(s) 0 minute(s) 0 second(s)
Laser Squelch: Disabled
Insert Idle Ingress: Disabled
Insert Idle Egress: Disabled
Phy:
Media type: Not known
Alarms:
Current:
Loss of Signal
Statistics:
FEC:
Corrected Codeword Count: 702710
Uncorrected Codeword Count: 1147
Autonegotiation disabled.
Operational values:
Speed: 400Gbps
Duplex: Full Duplex
Flowcontrol: None
Loopback: Internal
BER monitoring:
```

```
Not supported
Forward error correction: Standard (Reed-Solomon)
Holdoff Time: 0ms
```

Example

This example shows how to configure line loopback on the 4X100GE MXP.

```
RP/0/RP0/CPU0:ios(config)#controller hundredGigECtrlr 0/3/0/1/1
RP/0/RP0/CPU0:ios(config-eth-ctrlr)#loopback line
RP/0/RP0/CPU0:ios(config-eth-ctrlr)#sec-admin-state maintenance
RP/0/RP0/CPU0:ios(config-eth-ctrlr)#commit
```

This example shows how to verify the line loopback configured on the 4X100GE MXP.

```
RP/0/RP0/CPU0:ios#sh controllers hundredGigECtrlr 0/3/0/1/1
Fri Jul 22 10:34:39.730 UTC
Operational data for interface HundredGigECtrlr0/3/0/1/1:

State:
    Administrative state: enabled
    Operational state: Up
    LED state: Green On
    Maintenance: Enabled
    AINS Soak: None
      Total Duration: 0 hour(s) 0 minute(s)
      Remaining Duration: 0 hour(s) 0 minute(s) 0 second(s)
    Laser Squelch: Disabled
    Insert Idle Ingress: Disabled
    Insert Idle Egress: Disabled

Phy:
    Media type: Not known
    Statistics:
        FEC:
            Corrected Codeword Count: 6110368                 Valid: True
     Start time: 13:10:41 Thu Jul 21 2022
            Uncorrected Codeword Count: 2771                  Valid: True
     Start time: 13:10:41 Thu Jul 21 2022
        PCS:
            Total BIP errors: 63700992                        Valid: True
     Start time: 13:10:41 Thu Jul 21 2022
            Total frame errors: 0                             Valid: False
     Start time: 13:10:41 Thu Jul 21 2022
            Total Bad SH: 0                                   Valid: False
     Start time: 13:10:41 Thu Jul 21 2022

Autonegotiation disabled.

Operational values:
    Speed: 100Gbps
    Duplex: Full Duplex
    Flowcontrol: None
    Loopback: Line
    BER monitoring:
        Not supported
    Forward error correction: Standard (Reed-Solomon)
    Holdoff Time: 0ms
```

Example

This example shows how to configure internal loopback on the 4X100GE MXP.

```
RP/0/RP0/CPU0:ios#conf
RP/0/RP0/CPU0:ios(config)#controller hundredGigECtrlr 0/3/0/7/1
RP/0/RP0/CPU0:ios(config-eth-ctrlr)#sec-admin-state maintenance
RP/0/RP0/CPU0:ios(config-eth-ctrlr)#loopback internal
RP/0/RP0/CPU0:ios(config-eth-ctrlr)#commit
```

This example shows how to verify the internal loopback configured on the 4X100GE MXP.

```
RP/0/RP0/CPU0:ios#show controller HundredGigECtrlr 0/3/0/7/1
Fri Jul 22 10:40:34.928 UTC

Operational data for interface HundredGigECtrlr0/3/0/7/1:

State:
    Administrative state: enabled
    Operational state: Down (Reason: State undefined)
    LED state: Red On
    Maintenance: Enabled
    AINS Soak: None
      Total Duration: 0 hour(s) 0 minute(s)
      Remaining Duration: 0 hour(s) 0 minute(s) 0 second(s)
    Laser Squelch: Disabled
    Insert Idle Ingress: Disabled
    Insert Idle Egress: Disabled

Phy:
    Media type: Not known
    Alarms:
        Current:
            Loss of Signal
    Statistics:
        FEC:
            Corrected Codeword Count: 31426046
            Uncorrected Codeword Count: 2187

Autonegotiation disabled.

Operational values:
    Speed: 100Gbps
    Duplex: Full Duplex
    Flowcontrol: None
    Loopback: Internal
    BER monitoring:
        Not supported
    Forward error correction: Standard (Reed-Solomon)
    Holdoff Time: 0ms
```

3. Run the **show alarms brief system active** command to view the loopback configuration alarms.

Example

```
RP/0/RP0/CPU0:ios#show alarms brief system active
Tue Sep 13 17:43:35.212 UTC

------------------------------------------------------------------------------
Active Alarms
```

```
-------------------------------------------------------------------------------
Location        Severity     Group            Set Time
Description


-------------------------------------------------------------------------------



                                                        0/2             Minor
        Controller       09/13/2022 17:34:32 UTC    HundredGigECtrlr0/2/0/2
- Internal Loopback Configured
0/2             Minor        Controller       09/13/2022 17:34:32 UTC
HundredGigECtrlr0/2/0/2 - Internal Loopback Configured
0/2             Minor        Controller       09/13/2022 17:34:32 UTC
HundredGigECtrlr0/2/0/2 - Line Loopback Configured


0/2             Major        Ethernet         09/13/2022 17:34:31 UTC
HundredGigECtrlr0/2/0/1/2 - Loss of Synchronization The Data Interface


0/2             Minor        Controller       09/13/2022 17:39:19 UTC
CoherentDSP0/2/0/0 - Internal Loopback Configured
```

Loop-and-drop mechanism on Ethernet controller

This section explains how loop-and-drop mechanisms isolate traffic during diagnostic loopback operations on Ethernet controllers to prevent test traffic from reaching routers and causing false alarms.

Table 37: Feature History

Feature Name	Release Information	Description
Loop-and-drop mechanism on Ethernet controller	Cisco IOS XR Release 24.4.1	The internal and line loopback configurations on the Ethernet controller have been enhanced to activate a loop-and-drop mechanism. This mechanism prevents traffic from flowing beyond the client port to the near end router in case of internal loopback, and far end router in case of the line loopback. This loop-and-drop mechanism is implemented by: • Internal loopback: Shutting down the transmit power at the client Ethernet controller. • Line loopback: Inserting a local fault alarm signal toward the trunk. This feature is supported on these cards: • NCS1K14-2.4T-K9 • NCS1K14-2.4T-X-K9 • NCS1K4-QXP-K9 • NCS1K4-1.2T-K9 (supports only internal loop-and-drop) • NCS1K4-1.2TL-K9 (supports only internal loop-and-drop) This enhancement isolates traffic during loopback, preventing it from reaching the router. A practical use case for this is when using the PRBS pattern for testing. By effectively containing the PRBS traffic, the mechanism ensures that PRBS traffic does not cause unwanted events such as error bits, which could otherwise lead to misinterpretation of network status and trigger false alarms at the router ports.

From Release 24.4.1, configuring client loopback on Ethernet controllers activates a loop-and-drop mechanism, replacing the previous loop-and-continue mechanism. When you set up internal and line loopbacks under Ethernet controllers, these loopback types are automatically applied for both 100GE and 400GE traffic.

- Internal loop-and-drop
- Line loop-and-drop

Advantage

This enhancement provides a significant advantage by isolating traffic during loopback operations. It prevents traffic from reaching the router, thereby avoiding potential undesired events and alarms at the router ports. This is particularly beneficial in maintaining network stability and integrity during diagnostic activities.

A practical example of this advantage is seen when using the Pseudo-Random Bit Sequence (PRBS) pattern to evaluate network link performance and reliability. By effectively containing PRBS traffic within the loopback, the mechanism prevents unwanted events, such as error bits, from reaching the router. This containment ensures that test data does not interfere with the router's regular functions, avoiding misinterpretation of network status and preventing false alarms at the router ports.

Internal loop-and-drop

When you apply an internal loopback on a client Ethernet controller, the transmit power is disabled. This mechanism is applicable for both breakout and non-breakout setups. In a breakout setup, power is turned off on the specific lane where the loopback is configured, whereas in a non-breakout setup, power is shut down on all the lanes. This power shutdown prevents traffic from traveling beyond the client port to the near-end router as indicated by the cross mark in this image.

Figure 7: Internal loop-and-drop

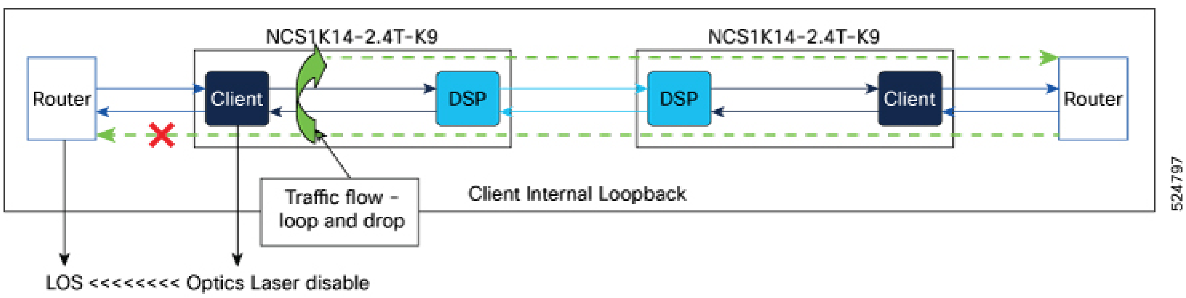

Line loop-and-drop

When you apply a line loopback on a specific client Ethernet controller, the system forces a local fault (LF) signal on the near-end in the egress direction. This LF signal then propagates towards the far-end, preventing the traffic from flowing towards the far-end router as indicated by the cross mark in this image.

Figure 8: Line loop-and-drop

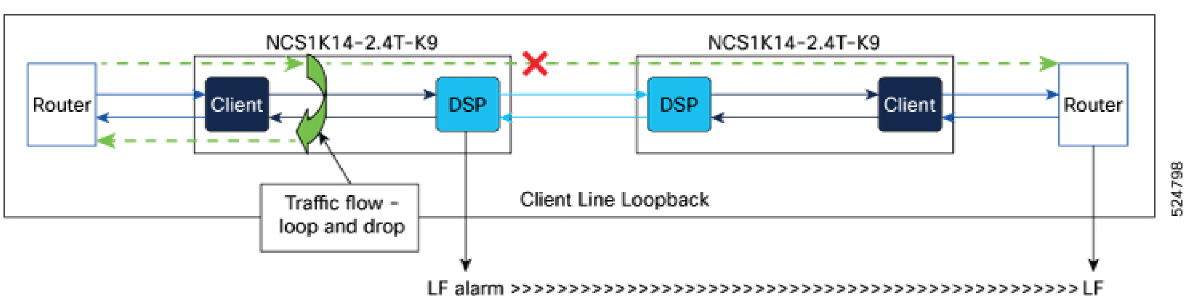

Supported cards

This mechanism is supported on these cards:

- NCS1K14-2.4T-K9
- NCS1K14-2.4T-X-K9
- NCS1K4-QXP-K9
- NCS1K4-2-QDD-C-K9

- NCS1K4-1.2T-K9 (supports only internal loop-and-drop)
- NCS1K4-1.2TL-K9 (supports only internal loop-and-drop)

Note

Applying a line loopback on the client Ethernet controller of the NCS1K4-2-QDD-C-K9 card triggers a "Loss of Synchronization on Data Interface (SYNCLOSS)" alarm. This behavior is expected.

Loop-and-drop mechanism on coherentDSP controller

This section explains the loop-and-drop mechanisms on coherentDSP controllers and how they replace previous loop-and-continue mechanisms to enhance network fault indications.

From Release 25.3.1, configuring trunk loopback on coherentDSP controllers activates a loop-and-drop mechanism, replacing the previous loop-and-continue mechanism. When you set up internal and line loopbacks under coherentDSP controller, these loopback types are automatically applied for the traffic:

- Internal
- Line

Table 38: Feature History

Feature Name	Release Information	Description
Loop-and-drop mechanism on coherentDSP controller	Cisco IOS XR Release 25.3.1	The internal and line loopback configurations on the coherentDSP controller are enhanced to activate a loop-and-drop mechanism. This mechanism prevents traffic from flowing beyond the trunk port to the far end router in case of internal loopback, and connected router in case of the line loopback. This loop-and-drop mechanism is implemented by: Internal: Propagating local fault to the far-end node by modifying the 64th byte of TTI. Line: Inserting a local fault alarm signal toward clients associated with the trunk where the loopback is applied in the current node. This feature is supported on these cards: • NCS1K14-2.4T-K9 • NCS1K14-2.4T-X-K9 • NCS1K14-2.4T-L-K9 • NCS1K14-2.4T-XL-K9 The loop-and-drop feature provides a clear indication to the user that if traffic is not active on the router port, it is due to either a fault or an existing configuration that is preventing the traffic from coming up.

Supported cards

This mechanism is supported on these cards:

- NCS1K14-2.4T-K9
- NCS1K14-2.4T-X-K9
- NCS1K14-2.4T-L-K9
- NCS1K14-2.4TL-X-K9

How internal loopback on a coherentDSP controller works

This section explains how applying an internal loopback on a coherentDSP controller affects signal flow, fault propagation, and client/router behavior

This process explains the effects and behavior when applying an internal loopback on the coherentDSP controller, specifically how the software handles the local fault (LF) signal propagation to the associated clients and routers.

Summary

The key components that are involved in loop and drop process during the internal loopback are:

- Near-end and far-end routers
- Near-end and far-end NCS 1014 nodes with 2.4T cards.

Workflow

Figure 9: Internal loopback on Trunk port

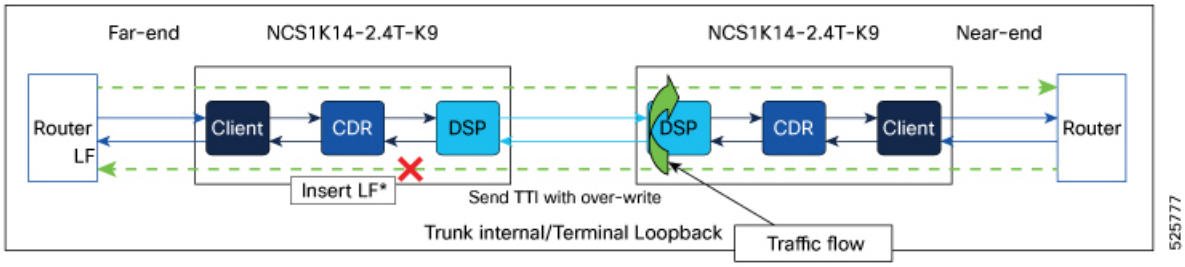

* = LF insertion based on TTI over-write

When you apply an internal loopback on a coherentDSP controller:

1. The software overwrites the most significant bit of the 64th byte of the TTI (Trail Trace Identifier) at the near-end (NE) node.
2. This modified TTI is propagated to the far-end (FE) node.
3. The FE node detects the overwritten bit in the TTI.
4. Upon detection, the FE node raises an LF signal.
5. The LF signal is propagated to the client devices associated with the trunk on the FE node.
6. The LF signal is also sent to the FE router.

Result

As a result, loopback traffic is prevented from flowing towards the FE router, as indicated by the cross mark in the related image.

Limitation of Internal loop and drop on the trunk port

This feature is implemented exclusively with ASCII TTI, so configuring HEX TTI is not supported.

How line loopback on a coherentDSP controller works

This section explains how applying an internal loopback on a coherentDSP controller affects signal flow, fault propagation, and client/router behavior.

This process explains the effects and behavior when applying a line loopback on the coherent controller, specifically how the software handles the local fault (LF) signal propagation to associated clients and routers.

Summary

The key components that are involved in loop and drop process during the line loopback are:

- Near-end and far-end routers
- Near-end and far-end NCS 1014 nodes with 2.4T cards.

Workflow

Figure 10: Line loopback on Trunk port

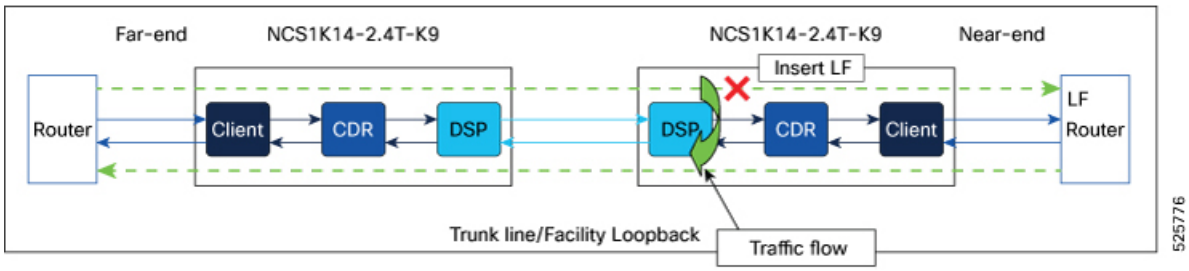

When you apply an line loopback on a coherentDSP controller:

1. The software forces an LF signal towards the clients associated with the trunk in the near-end (NE) node.
2. The LF signal generated by the software is then propagated from the clients towards the connected router.

Result

This LF signal prevents the traffic from flowing towards the connected router as indicated by the cross mark in this image.

Restore factory settings

Use this procedure to restore the NCS 1014 to its default factory configuration, erasing all system settings, usernames, passwords, and IP addresses.

> **Note**
>
> Perform this operation only on the console port.

Use this task to restore NCS 1014 to factory settings.

You can perform this operation only through the console port and not on the management interface.

Procedure

Run the **commit replace** command.

Example

```
RP/0/RP0/CPU0:ios#configure
RP/0/RP0/CPU0:ios(config)#commit replace
Tue Sep 24 09:36:59.430 UTC

This commit will replace or remove the entire running configuration. This
operation can be service affecting.
Do you wish to proceed? [no]: yes
RP/0/RP0/CPU0:ios(config)#exit
RP/0/RP0/CPU0:ios#reload
Tue Sep 24 09:38:12.881 UTC

Standby card not present or not Ready for failover. Proceed? [confirm]
```

```
Preparing system for backup. This may take a few minutes especially for large
 configurations.
        Status report: node0_RP0_CPU0: BACKUP INPROGRESS

        Status report: node0_RP0_CPU0: BACKUP HAS COMPLETED SUCCESSFULLY
[Done]

Proceed with reload?  [confirm]
Reloading node  0/RP0/CPU0

RL: Reboot initiated with code 1, cause User initiated graceful reload
reboot_timeout 30 shutdown delay 0
RL: Shutdown initiated
Query the node to be reloaded
 NODE_IP of noded to be reloaded 198.51.100.1
sending stop hb
Cause: User initiated graceful reload
VM IP addr sent for reload 198.51.100.1

Received ack from sdrmgr for reload request.Returncode:0
successful disconnection from service
wd_disconnect_cb 548 CMP-WD disconnected successfully
Invmgr successful disconnection from service

RP/0/RP0/CPU0:ios#
Disconnecting from 'default-sdr--1' console. Continue(Y/N)?


Connecting to 'default-sdr--1' console
ÿûÿûÿûÿýbootlogd: ioctl(/dev/pts/2, TIOCCONS): Device or resource busy
/sbin/restorecon:  lstat(/etc/adjtime) failed:  No such file or directory
Configuring network interfaces... done.
Starting system message bus: dbus.
Starting OpenBSD Secure Shell server: sshd
sshd start/running, process 1739
Starting rpcbind daemon...done.
Starting random number generator daemonUnable to open file: /dev/tpm0
.
Starting system log daemon...0
Starting kernel log daemon...0
tftpd-hpa disabled in /etc/default/tftpd-hpa
Starting internet superserver: xinetd.
net.ipv4.ip_forward = 1
Libvirt not initialized for container instance
Starting crond: OK
SIOCADDRT: File exists

DBG_MSG: platform type is 0
[*] ima_policy have loaded, or IMA policy file does not exist
Start serial incoming on , Clearing ..
RP/0/RP0/CPU0:Sep 24 09:38:44.284 UTC: fpd-serv[256]:
%PKT_INFRA-FM-3-FAULT_MAJOR : ALARM_MAJOR :FPD-NEED-UPGRADE :DECLARE :0/PM0:


This (D)RP Node is not ready or active for login /configuration
.......
........
........

ios con0/RP0/CPU0 is now available
```

```
Press RETURN to get started.

!!!!!!!!!!!!!!!!!!! NO root-system username is configured. Need to configure
 root-system username. !!!!!!!!!!!!!!!!!!!
```

After the **commit replace** operation completes, you must perform the IOS XR reload operation.

The **commit best-effort** command merges the target configuration with the running configuration and commits only valid changes (best effort). Some configuration changes might fail due to semantic errors.

Headless mode

This section explains how headless mode enables uninterrupted traffic flow on the NCS 1014 during control plane disruptions.

A headless mode is a system operation mode that

- enables Cisco NCS 1014 to continue forwarding traffic when the controller card is absent, failed, or being restarted
- allows fault propagation for client and trunk ports, and
- maintains errorless operation unless there is any line-level activity or the traffic is encrypted and the keys have expired beyond a predefined maximum duration.

During headless mode, the control plane will be unavailable. You cannot provision new configurations, view operational data, or perform performance monitoring without a functional controller.

Trail trace identifier

This section describes trail trace identifiers, their role in network signal identification, and configuration capabilities.

A trail trace identifier (TTI) is a feature that

- helps identify a signal from its source to its destination within a network,
- supports configuration of sent or expected identifiers in both ASCII and HEX formats, and
- triggers a controller shutdown and a TIM alarm when an expected TTI string does not match the received trace string.

Configure Trail Trace Identifier

Use this procedure to configure the Trail Trace Identifier (TTI) settings on a coherent DSP controller to enable tracking and identification of data paths.

Use this task to configure TTI on the coherent DSP controllers of a 1.2T, 2.4T, or 2.4TX card.

Note

Use the same TTI mode on both ends of the link. Configure TTI manually on both ends, or use automatic TTI on both ends. Do not mix modes (manual on one end and automatic on the other), as this is a misconfiguration. In mixed mode, the received TTI fields in the output of **show controllers coherentDSP** command may be incomplete or unreliable.

Procedure

Run the **controller coherentDSP** *R/S/I/P* **tti** {**sent | expected**} **ascii | hex***tti-string* command.

Note

The *tti-string* can have a maximum of 64 characters for ASCII and 128 characters for HEX.

Example

This sample shows how to configure TTI on a coherent DSP controller with the sent and expected strings set to the same ASCII string. The state of the controller is up.

```
RP/0/RP0/CPU0:ios#config
RP/0/RP0/CPU0:ios(config)#controller coherentDSP
RP/0/RP0/CPU0:ios(config-CoDSP)#tti sent ascii hello
RP/0/RP0/CPU0:ios(config-CoDSP)#tti expected ascii hello cisco
RP/0/RP0/CPU0:ios(config-CoDSP)#commit
Thu Dec 7 14:25:43.391 IST
RP/0/RP0/CPU0:ios(config-CoDSP)#end
```

This is a sample to view the TTI details on a coherentDSP controller.

```
RP/0/RP0/CPU0:ios#show controllers coherentDSP 0/3/0/0
Thu Dec 7 14:26:37.345 IST

Port : CoherentDSP 0/3/0/0
Controller State : Down
Inherited Secondary State : Normal
Configured Secondary State : Normal
Derived State : In Service
Loopback mode : None
BER Thresholds : SF = 1.0E-5 SD = 1.0E-7
Performance Monitoring : Enable
Bandwidth : 800.0Gb/s

Alarm Information:
LOS = 0 LOF = 0 LOM = 0
OOF = 0 OOM = 0 AIS = 0
IAE = 0 BIAE = 0 SF_BER = 0
SD_BER = 0 BDI = 0 TIM = 1
FECMISMATCH = 0 FEC-UNC = 0 FLEXO_GIDM = 0
FLEXO-MM = 0 FLEXO-LOM = 0 FLEXO-RDI = 0
FLEXO-LOF = 0
Detected Alarms : TIM
```

```
Bit Error Rate Information
PREFEC BER : 2.57E-04
POSTFEC BER : 0.00E+00
Q-Factor : 10.80 dB

Q-Margin : 4.50 dB

Instantaneous Q-Margin : 4.50 dB

OTU TTI Sent

FULL TTI ASCII STRING : hello
OTU TTI Received
FULL TTI ASCII STRING : hello
OTU TTI Expected
FULL TTI ASCII STRING : hello cisco

FEC mode : Soft-Decision 15

Flexo-Mode : Enable
Flexo Details:
Tx GID : 1
TX IID : 1, 2, 3, 4, 5, 6, 7, 8,
Rx GID : 1
RX IID : 1, 2, 3, 4, 5, 6, 7, 8,

AINS Soak : None
AINS Timer : 0h, 0m
AINS remaining time : 0 seconds
```

This sample shows how to configure TTI on a coherent DSP controller with the sent and expected strings set to HEX strings.

```
RP/0/RP0/CPU0:ios#config
RP/0/RP0/CPU0:ne(config)#controller coherentDSP 0/0/0/0
RP/0/RP0/CPU0:ne(config-CoDSP)#tti sent hex 6E6E6E2A2A2A
RP/0/RP0/CPU0:ne(config-CoDSP)#tti  expected hex 3F4B4B4B3D3E3A
RP/0/RP0/CPU0:ne(config-CoDSP)#commit
RP/0/RP0/CPU0:ios(config)#exit
```

Configure Trail Trace Identifier on QXP card

Use this procedure to configure a trail trace identifier (TTI) on a QXP card using either ASCII or SAPI/DAPI formats on ODU-flex, ODU4, and coherentDSP controllers.

Use this task to configure the TTI sent or expected string in the full ASCII format, or Source Access Point Identifier (SAPI)/Destination Access Point Identifier (DAPI) format on ODU-flex, ODU4, and coherentDSP controllers for the QXP card.

> **Note**
>
> TTI operates only in **trunk mode OR**.

This table lists the ASCII format that is supported for TTI:

ASCII with character string	Controller
Full ASCII 64-character	CoherentDSP,odu4,odu-flex
SAPI ASCII 15-character	CoherentDSP,odu4,odu-flex
DAPI ASCII 15-character	CoherentDSP,odu4,odu-flex
Operator-specific ASCII 32-character	CoherentDSP,odu4,odu-flex

Procedure

1. Run the **controller** *controller-type R/S/I/P* **tti** {**sent | expected**} {**ascii | sapi ascii | dapi ascii | operator-specific ascii** } *tti-string* to configure TTI.

   Example

   This is a sample configuration for FULL TTI for coherentDSP controller.

```
RP/0/RP0/CPU0:ios(config)#controller coherentDSP 0/0/0/8
RP/0/RP0/CPU0:ios(config-CoDSP)#tti sent ascii cisco
RP/0/RP0/CPU0:ios(config-CoDSP)#tti  expected ascii cisco123
RP/0/RP0/CPU0:ios(config-CoDSP)#commit
```

   This is a sample configuration for TTI HEX for coherentDSP controller.

```
RP/0/RP0/CPU0:ios(config)#controller coherentDSP 0/0/0/8
RP/0/RP0/CPU0:ios(config-CoDSP)#tti sent hex 6E6E6E2A2A2A
RP/0/RP0/CPU0:ios(config-CoDSP)#tti  expected hex 3F4B4B4B3D3E3A
RP/0/RP0/CPU0:ios(config-CoDSP)#commit
```

   This is a sample configuration for Operator specific TTI for coherentDSP controller.

```
RP/0/RP0/CPU0:ios(config)#controller coherentDSP 0/0/0/8
RP/0/RP0/CPU0:ios(config-CoDSP)#tti sent operator-specific ascii hellooo
RP/0/RP0/CPU0:ios(config-CoDSP)#tti expected operator-specific ascii hellooo
RP/0/RP0/CPU0:ios(config-CoDSP)#commit
```

This is a sample configuration for Operator specific TTI HEX for coherentDSP controller.

```
RP/0/RP0/CPU0:ios(config)#controller coherentDSP 0/0/0/8
RP/0/RP0/CPU0:ios(config-CoDSP)#tti  sent operator-specific hex
6E6E6E2A2A2A3D3E3A3A6E6E6E2A2A2A3D
RP/0/RP0/CPU0:ios(config-CoDSP)#tti  expected operator-specific hex
5A5A6D3A3B3C3F4B4B4B3D3E3A
RP/0/RP0/CPU0:ios(config-CoDSP)#commit
```

This a sample configuration for SAPI for coherentDSP controller.

```
RP/0/RP0/CPU0:ios(config)#controller coherentDSP 0/0/0/8
RP/0/RP0/CPU0:ios(config-CoDSP)#tti sent operator-specific ascii hellooo
RP/0/RP0/CPU0:ios(config-CoDSP)#tti expected operator-specific ascii hellooo
RP/0/RP0/CPU0:ios(config-CoDSP)#commit
```

This is a sample configuration for DAPI for coherentDSP controller.

```
RP/0/RP0/CPU0:ios(config)#controller coherentDSP 0/0/0/8
RP/0/RP0/CPU0:ios(config-CoDSP)#tti sent dapi ascii cisco123
RP/0/RP0/CPU0:ios(config-CoDSP)#tti  expected dapi ascii hello
RP/0/RP0/CPU0:ios(config-CoDSP)#commit
```

2. Run the **commit** command to apply the changes.

Configure chromatic dispersion

Use this procedure to configure chromatic dispersion on optics controllers for 1.2T, 2.4T, and 2.4TX cards.

Use this task to configure chromatic dispersion on optics controllers of 1.2T, 2.4TX, and 2.4T cards.

When you configure the maximum and minimum values for chromatic dispersion for any data rate, ensure the minimum difference between the configured values is equal to or greater than 1500 ps/nm.

This table lists the default CD search range for a 1.2T card.

Data rate	BPS	Card support	Default CD search range
200G to 500G	BPS < = 3	1.2T, 1.2TL	-10,000 to 100,000 ps/nm
	3 < BPS <= 4	1.2T, 1.2TL	-10,000 to 80,000 ps/nm
	4 < BPS <=5	1.2T	-5,000 to 20,000 ps/nm
600G	BPS=5.2578125	1.2T	-2000 to 2,000 ps/nm

This table lists the default CD search range for 2.4T, 2.4TX, cards.

Line rate	Symbol rate (				
	138GBd	128GBd	118GBd	108GBd	98(
1200G	4000 to -5000	4000 to -5000	–	–	–

Line rate	Symbol rate (				
	138GBd	128GBd	118GBd	108GBd	98(
1000G	20000 to -5000	20000 to -5000	20000 to -5000	–	–
800G	48000 to -10000	48000 to -10000	48000 to -10000	35000 to -10000	350
600G	74000 to -10000	74000 to -10000	74000 to -10000	60000 to -10000	600
500G	90000 to -10000	90000 to -10000	90000 to -10000	72000 to -10000	720
400G	–	90000 to -10000	90000 to -10000	72000 to -10000	720

Note

The cd-min and cd-max values must be set for BPS values that are greater than 4 in the 1.2T card.

Note

When the user provisions the cd-min and cd-max values that are outside the range through CLI, the provisioned values are accepted; however, only the actual values supported by the hardware are applied.

Procedure

1. Enter the `controller optics` command in the global configuration mode.

   Example

   This is a sample where chromatic dispersion is configured on the optics controller.

```
RP/0/RP0/CPU0:ios#configure
Mon Aug 19 19:31:42.115 UTC
RP/0/RP0/CPU0:ios(config)#controller  optics 0/1/0/1
RP/0/RP0/CPU0:ios(config-Optics)#cd-max 4000
RP/0/RP0/CPU0:ios(config-Optics)#cd-min -1000
RP/0/RP0/CPU0:ios(config-Optics)#commit
Mon Aug 19 19:35:24.697 UTC
RP/0/RP0/CPU0:ios(config-Optics)#exit
RP/0/RP0/CPU0:ios(config)#exit
```

```
RP/0/RP0/CPU0:ios#show run controller optics 0/1/0/*
Mon Aug 19 19:57:41.859 UTC
controller Optics0/1/0/0
 transmit-power -15
 dwdm-carrier 50GHz-grid itu-ch 55
 enh-sop-tol-mode 1
 cross-pol-gain-mode 10
```

```
 lbc-high-threshold 5
!
controller Optics0/1/0/1
 description trunk power UP
 cd-min -1000
 cd-max 4000
 enh-colorless-mode 2
 enh-sop-tol-mode 3
 nleq-comp-mode 4
 cross-pol-gain-mode 2
 cross-pol-weight-mode 3
 cpr-win-mode 3
 cpr-ext-win-mode 8
 rx-voa fixed-ratio 1200
 filter-roll-off-factor 0.035
!
controller Optics0/1/0/5
 soak-time 10
!
```

2. Run the **commit** command to apply the changes.

Configure chromatic dispersion threshold

Use this procedure to configure the minimum and maximum acceptable chromatic dispersion thresholds for trunk optics controllers.

Use this task to configure the minimum and maximum acceptable chromatic dispersion for the trunk optics controllers.

The CD alarm is raised if the chromatic dispersion goes below the minimum or exceeds the maximum value.

Procedure

1. Enter the **controller optics***R/S/I/P***cd-high-threshold***cd-high***cd-low-threshold***cd-low* command in the global configuration mode to configure the minimum and maximum chromatic dispersion threshold.

   Example

   This sample configures the maximum and minimum acceptable CD on the controller optics:

```
RP/0/RP0/CPU0:ios#configure
RP/0/RP0/CPU0:ios(config)#controller optics 0/0/0/7
RP/0/RP0/CPU0:ios(config-Optics)#cd-high-threshold 2400
RP/0/RP0/CPU0:ios(config-Optics)#cd-low-threshold -2400
RP/0/RP0/CPU0:ios(config-Optics)#commit
```

   This sample shows the maximum and minimum acceptable CD configured on the controller optics:

```
RP/0/RP0/CPU0:ios#show controllers optics 0/0/0/7
Fri Nov 12 10:58:50.595 UTC
Controller State: Up
Transport Admin State: In Service
Laser State: On
LED State: Yellow
Optics Status
         Optics Type:  CIM8 DWDM
```

```
        DWDM carrier Info: C BAND, MSA ITU Channel=61, Frequency=193.10THz,

        Wavelength=1552.524nm

        Alarm Status:
        -------------
        Detected Alarms:
                HIGH-RX-PWR   LOW-TX-PWR
                HIGH-DGD

        LOS/LOL/Fault Status:

        Alarm Statistics:

        -------------
        HIGH-RX-PWR = 1            LOW-RX-PWR = 0
        HIGH-TX-PWR = 0            LOW-TX-PWR = 1
        HIGH-LBC = 0               HIGH-DGD = 6
        OOR-CD = 0                 OSNR = 0
        WVL-OOL = 0                MEA  = 0
        IMPROPER-REM = 1
        TX-POWER-PROV-MISMATCH = 0
        Laser Bias Current = 0.0 %
        Actual TX Power = 0.97 dBm
        RX Power = -0.53 dBm
        RX Signal Power = -1.20 dBm
        Frequency Offset = 63 MHz

        Performance Monitoring: Enable

        THRESHOLD VALUES
        ----------------

        Parameter                 High Alarm  Low Alarm  High Warning  Low
Warning
        ------------------------  ----------  ---------  ------------
-----------
        Rx Power Threshold(dBm)         -2.0       -3.0           0.0
    0.0
        Tx Power Threshold(dBm)          4.0        2.0           0.0
    0.0
        LBC Threshold(mA)                N/A        N/A          0.00
   0.00

        LBC High Threshold = 55 %
        Configured Tx Power = 1.00 dBm
        Configured CD High Threshold = 2400 ps/nm
        Configured CD lower Threshold = -2400 ps/nm
        Configured OSNR lower Threshold = 0.40 dB
        Configured DGD Higher Threshold = 0.30 ps
        Baud Rate =  63.1394679230 GBd
        Bits per Symbol = 3.0000000000  bits/symbol
        Modulation Type: 8QAM
        Chromatic Dispersion 0 ps/nm
        Configured CD-MIN -48000 ps/nm  CD-MAX 48000 ps/nm
        Polarization Mode Dispersion = 0.0 ps
        Second Order Polarization Mode Dispersion = 29.00 ps^2
        Optical Signal to Noise Ratio = 36.10 dB
        SNR = 17.50 dB
        Polarization Dependent Loss = 0.50 dB
        Polarization Change Rate = 0.00 rad/s
        Differential Group Delay = 1.00 ps
```

```
Transceiver Vendor Details

         Form Factor            : CIM8
         Name                   : CISCO-ACACIA
         Part Number            : 10-3500-01
         Rev Number             : 01
         Serial Number          : ACA24480037
         PID                    : CIM8-C-K9
         VID                    : VES1
         Date Code(yy/mm/dd)    : 23/11/10
         Fiber Connector Type: LC
         Otn Application Code: Not Set
         Sonet Application Code: Not Set
         Ethernet Compliance Code: Not set

Transceiver Temperature : 46 Celsius
AINS Soak                : None
AINS Timer               : 0h, 0m
AINS remaining time      : 0 seconds
```

2. Run the **commit** command to apply the changes.

Configure transmit power

Use this procedure to configure the transmit power for trunk (CIM8 and PICO) optics within a defined range to optimize optical signal performance.

Use this task to configure transmit power on the trunk (CIM8 and PICO) optics within the -190 to +50 range (in units of 0.1dBm)

Procedure

Enter the `controller optics` command in the global configuration mode.

Example

```
RP/0/RP0/CPU0:ios#configure
Mon Aug 19 19:31:42.115 UTC
RP/0/RP0/CPU0:ios(config)#controller optics 0/1/0/7
RP/0/RP0/CPU0:ios(config-Optics)#transmit-power -1.50
RP/0/RP0/CPU0:ios(config-Optics)#commit
Mon Aug 19 19:35:24.697 UTC
RP/0/RP0/CPU0:ios(config-Optics)#exit
RP/0/RP0/CPU0:ios(config)#exit
```

This is a sample in which transmit power of -1.50 dBm is configured on the CIM8 optics.

```
RP/0/RP0/CPU0:ios#show  controllers optics 0/0/0/7
 Controller State: Up
 Transport Admin State: Automatic In Service
 Laser State: On
 LED State: Green
```

```
 Optics Status
         Optics Type:  CIM8 DWDM
         DWDM carrier Info: C BAND, MSA ITU Channel=61, Frequency=193.10THz,
         Wavelength=1552.524nm
         Alarm Status:
         -------------
         Detected Alarms: None
         LOS/LOL/Fault Status:
         Alarm Statistics:
         HIGH-RX-PWR = 0            LOW-RX-PWR = 2
         HIGH-TX-PWR = 0            LOW-TX-PWR = 1
         HIGH-LBC = 0               HIGH-DGD = 0
         OOR-CD = 0                 OSNR = 1
         WVL-OOL = 0                MEA  = 0
         IMPROPER-REM = 0
         TX-POWER-PROV-MISMATCH = 0
         Laser Bias Current = 0.0 %
         Actual TX Power = 1.98 dBm
         RX Power = -0.68 dBm
         RX Signal Power = -1.25 dBm
         Frequency Offset = -41 MHz
         Performance Monitoring: Enable
         THRESHOLD VALUES
         Parameter                 High Alarm  Low Alarm  High Warning  Low
Warning
         ------------------------  ----------  ---------  ------------
-----------
         Rx Power Threshold(dBm)         13.0      -17.0           0.0
   0.0
         Tx Power Threshold(dBm)          5.0      -13.0           0.0
   0.0
         LBC Threshold(mA)                N/A        N/A          0.00
  0.00
         LBC High Threshold = 90 %
         Configured Tx Power = 2.00 dBm
         Configured CD High Threshold = 180000 ps/nm
         Configured CD lower Threshold = -180000 ps/nm
         Configured OSNR lower Threshold = 20.50 dB
         Configured DGD Higher Threshold = 90.00 ps
         Baud Rate =  137.9783940000 GBd
         Bits per Symbol = 3.5200000000  bits/symbol
         Modulation Type: PCS
         Chromatic Dispersion -1 ps/nm
         Configured CD-MIN -10000 ps/nm  CD-MAX 48000 ps/nm
         Polarization Mode Dispersion = 0.0 ps
         Second Order Polarization Mode Dispersion = 13.00 ps^2
         Optical Signal to Noise Ratio = 38.10 dB
         SNR = 17.40 dB
         Polarization Dependent Loss = 2.50 dB
         Polarization Change Rate = 0.00 rad/s
         Differential Group Delay = 1.00 ps
         Filter Roll Off Factor : 0.100
         Rx VOA Target Power : -2.0 dBm
         NLEQ Compensation Mode : 0
         Cross Polarization Gain Mode : 10
         Proprietary Submarine Parameters
           Type : 1        Value : 0
           Type : 2        Value : 0
           Type : 3        Value : 0
           Type : 4        Value : 0
           Type : 5        Value : 0
           Type : 6        Value : 1000
```

```
          Type : 7        Value : 0
          Type : 8        Value : 0
          Type : 9        Value : 0
          Type : 10       Value : 0
```

Configure laser bias current high threshold

Use this procedure to configure the laser bias current high threshold on an optics controller to monitor and maintain optimal performance.

Use this task to laser bias current high threshold.

Procedure

1. Run the **controller optics***R/S/I/P* **lbc-high-threshold***lbc-value* command to configure the laser bias current threshold.

   Example

   This is a sample which configures the high laser bias threshold on the controller optics.

```
RP/0/RP0/CPU0:ios#configure
RP/0/RP0/CPU0:ios(config)#controller optics 0/0/0/7
RP/0/RP0/CPU0:ios(config-Optics)#lbc-high-threshold 55
RP/0/RP0/CPU0:ios(config-Optics)#commit
```

   This is a sample which shows the high rlaser bias threshold configured on the controller optics.

```
RP/0/RP0/CPU0:ios#show controllers optics 0/0/0/7
Fri Nov 12 10:58:50.595 UTC
Controller State: Up
Transport Admin State: In Service
Laser State: On
LED State: Yellow
Optics Status
         Optics Type:  CIM8 DWDM
         DWDM carrier Info: C BAND, MSA ITU Channel=61, Frequency=193.10THz,

         Wavelength=1552.524nm

         Alarm Status:
         -------------
         Detected Alarms:
                 HIGH-RX-PWR   LOW-TX-PWR
                 HIGH-DGD

         LOS/LOL/Fault Status:
         Alarm Statistics:
         -------------
         HIGH-RX-PWR = 1            LOW-RX-PWR = 0
         HIGH-TX-PWR = 0            LOW-TX-PWR = 1
         HIGH-LBC = 0               HIGH-DGD = 6
         OOR-CD = 0                 OSNR = 0
         WVL-OOL = 0                MEA  = 0
```

```
         IMPROPER-REM = 1
         TX-POWER-PROV-MISMATCH = 0
         Laser Bias Current = 0.0 %
         Actual TX Power = 0.97 dBm
         RX Power = -0.53 dBm
         RX Signal Power = -1.20 dBm
         Frequency Offset = 63 MHz

         Performance Monitoring: Enable

         THRESHOLD VALUES
         ----------------

         Parameter                 High Alarm  Low Alarm  High Warning  Low
Warning
         ------------------------  ----------  ---------  ------------
-----------
         Rx Power Threshold(dBm)         -2.0       -3.0           0.0
    0.0
         Tx Power Threshold(dBm)          4.0        2.0           0.0
    0.0
         LBC Threshold(mA)                N/A        N/A          0.00
   0.00

         LBC High Threshold = 55 %
         Configured Tx Power = 1.00 dBm
         Configured CD High Threshold = 2400 ps/nm
         Configured CD lower Threshold = -2400 ps/nm
         Configured OSNR lower Threshold = 0.40 dB
         Configured DGD Higher Threshold = 0.30 ps
         Baud Rate =  63.1394679230 GBd
         Bits per Symbol = 3.0000000000  bits/symbol
         Modulation Type: 8QAM
         Chromatic Dispersion 0 ps/nm
         Configured CD-MIN -48000 ps/nm  CD-MAX 48000 ps/nm
         Polarization Mode Dispersion = 0.0 ps
         Second Order Polarization Mode Dispersion = 29.00 ps^2
         Optical Signal to Noise Ratio = 36.10 dB
         SNR = 17.50 dB
         Polarization Dependent Loss = 0.50 dB
         Polarization Change Rate = 0.00 rad/s
         Differential Group Delay = 1.00 ps

Transceiver Vendor Details

         Form Factor            : CIM8
         Name                   : CISCO-ACACIA
         Part Number            : 10-3500-01
         Rev Number             : 01
         Serial Number          : ACA24480037
         PID                    : CIM8-C-K9
         VID                    : VES1
         Date Code(yy/mm/dd)    : 23/11/10
         Fiber Connector Type: LC
         Otn Application Code: Not Set
         Sonet Application Code: Not Set
         Ethernet Compliance Code: Not set

Transceiver Temperature : 46 Celsius
AINS Soak               : None
AINS Timer              : 0h, 0m
AINS remaining time     : 0 seconds
```

2. Run the **commit** command to apply the changes.

Configure differential group delay threshold

Use this procedure to configure the threshold value for the maximum acceptable differential group delay (DGD) on trunk optics controllers.

Use this task to configure the threshold value for the maximum acceptable differential group delay (DGD) on the trunk optics controllers.

- The DGD alarm is raised if DGD exceeds this value.
- The range is 0-18000 (in the units of 0.01 ps).

Procedure

1. Run the **controller optics***R/S/I/P***dgd-high-threshold***dgd-value* command to configure to configure the maximum acceptable DGD.

   Example

   This sample configures the minimum acceptable DGD on the controller optics.

```
RP/0/RP0/CPU0:ios#configure
RP/0/RP0/CPU0:ios(config)#controller optics 0/0/0/7
RP/0/RP0/CPU0:ios(config-Optics)#dgd-high-threshold 30
RP/0/RP0/CPU0:ios(config-Optics)#commit
```

   This sample shows the maximum acceptable DGD configured on the controller optics.

```
RP/0/RP0/CPU0:ios#show controllers optics 0/0/0/7
Fri Nov 12 10:58:50.595 UTC
Controller State: Up
Transport Admin State: In Service
Laser State: On
LED State: Yellow
Optics Status
         Optics Type:  CIM8 DWDM
         DWDM carrier Info: C BAND, MSA ITU Channel=61, Frequency=193.10THz,

         Wavelength=1552.524nm

         Alarm Status:
         -------------
         Detected Alarms:
                 HIGH-RX-PWR   LOW-TX-PWR
                 HIGH-DGD

         LOS/LOL/Fault Status:

         Alarm Statistics:

         -------------
         HIGH-RX-PWR = 1            LOW-RX-PWR = 0
         HIGH-TX-PWR = 0            LOW-TX-PWR = 1
```

```
         HIGH-LBC = 0                HIGH-DGD = 6
         OOR-CD = 0                  OSNR = 0
         WVL-OOL = 0                 MEA  = 0
         IMPROPER-REM = 1
         TX-POWER-PROV-MISMATCH = 0
         Laser Bias Current = 0.0 %
         Actual TX Power = 0.97 dBm
         RX Power = -0.53 dBm
         RX Signal Power = -1.20 dBm
         Frequency Offset = 63 MHz

         Performance Monitoring: Enable

         THRESHOLD VALUES
         ----------------

         Parameter                 High Alarm  Low Alarm  High Warning  Low
Warning
         ------------------------  ----------  ---------  ------------
-----------
         Rx Power Threshold(dBm)         -2.0       -3.0           0.0
    0.0
         Tx Power Threshold(dBm)          4.0        2.0           0.0
    0.0
         LBC Threshold(mA)                N/A        N/A          0.00
   0.00

         LBC High Threshold = 55 %
         Configured Tx Power = 1.00 dBm
         Configured CD High Threshold = 2400 ps/nm
         Configured CD lower Threshold = -2400 ps/nm
         Configured OSNR lower Threshold = 0.40 dB
         Configured DGD Higher Threshold = 0.30 ps
         Baud Rate =  63.1394679230 GBd
         Bits per Symbol = 3.0000000000  bits/symbol
         Modulation Type: 8QAM
         Chromatic Dispersion 0 ps/nm
         Configured CD-MIN -48000 ps/nm  CD-MAX 48000 ps/nm
         Polarization Mode Dispersion = 0.0 ps
         Second Order Polarization Mode Dispersion = 29.00 ps^2
         Optical Signal to Noise Ratio = 36.10 dB
         SNR = 17.50 dB
         Polarization Dependent Loss = 0.50 dB
         Polarization Change Rate = 0.00 rad/s
         Differential Group Delay = 1.00 ps

Transceiver Vendor Details

         Form Factor            : CIM8
         Name                   : CISCO-ACACIA
         Part Number            : 10-3500-01
         Rev Number             : 01
         Serial Number          : ACA24480037
         PID                    : CIM8-C-K9
         VID                    : VES1
         Date Code(yy/mm/dd)    : 23/11/10
         Fiber Connector Type: LC
         Otn Application Code: Not Set
         Sonet Application Code: Not Set
         Ethernet Compliance Code: Not set

Transceiver Temperature : 46 Celsius
```

```
AINS Soak                : None
AINS Timer               : 0h, 0m
AINS remaining time      : 0 seconds
```

2. Run the **commit** command to apply the changes.

Configure optical signal to noise ratio

Use this procedure to configure the minimum acceptable optical signal to noise ratio (OSNR) on supported controller optics cards to ensure signal quality and system alarm function.

Use this task to configure the minimum acceptable Optical Signal to Noise ratio (OSNR) value on the 1.2T, 2.4TX, and 2.4T cards.

The OSNR alarm is raised if OSNR goes below this value.

The range is 0-4000 (in units of 0.01db).

Procedure

1. Enter the **controller optics***R/S/I/P***osnr-low-threshold***osnr-valuecd-low* command to configure the minimum acceptable OSNR.

   Example

   This sample configures the minimum acceptable OSNR on the controller optics.

```
RP/0/RP0/CPU0:ios#configure
RP/0/RP0/CPU0:ios(config)#controller optics 0/0/0/7
RP/0/RP0/CPU0:ios(config-Optics)#osnr-low-threshold 40
RP/0/RP0/CPU0:ios(config-Optics)#commit
```

   This sample shows the minimum acceptable OSNR configured on the controller optics.

```
RP/0/RP0/CPU0:ios#show controllers optics 0/0/0/7
Fri Nov 12 10:58:50.595 UTC
Controller State: Up
Transport Admin State: In Service
Laser State: On
LED State: Yellow
Optics Status
         Optics Type:  CIM8 DWDM
         DWDM carrier Info: C BAND, MSA ITU Channel=61, Frequency=193.10THz,

         Wavelength=1552.524nm

         Alarm Status:
         -------------
         Detected Alarms:
                 HIGH-RX-PWR   LOW-TX-PWR
                 HIGH-DGD

         LOS/LOL/Fault Status:
```

```
         Alarm Statistics:
         -------------
         HIGH-RX-PWR = 1            LOW-RX-PWR = 0
         HIGH-TX-PWR = 0            LOW-TX-PWR = 1
         HIGH-LBC = 0               HIGH-DGD = 6
         OOR-CD = 0                 OSNR = 0
         WVL-OOL = 0                MEA  = 0
         IMPROPER-REM = 1
         TX-POWER-PROV-MISMATCH = 0
         Laser Bias Current = 0.0 %
         Actual TX Power = 0.97 dBm
         RX Power = -0.53 dBm
         RX Signal Power = -1.20 dBm
         Frequency Offset = 63 MHz

         Performance Monitoring: Enable

         THRESHOLD VALUES
         ----------------

         Parameter                 High Alarm  Low Alarm  High Warning  Low
Warning
         ------------------------  ----------  ---------  ------------
-----------
         Rx Power Threshold(dBm)         -2.0       -3.0           0.0
    0.0
         Tx Power Threshold(dBm)          4.0        2.0           0.0
    0.0
         LBC Threshold(mA)                N/A        N/A          0.00
   0.00

         LBC High Threshold = 55 %
         Configured Tx Power = 1.00 dBm
         Configured CD High Threshold = 2400 ps/nm
         Configured CD lower Threshold = -2400 ps/nm
         Configured OSNR lower Threshold = 0.40 dB
         Configured DGD Higher Threshold = 0.30 ps
         Baud Rate =  63.1394679230 GBd
         Bits per Symbol = 3.0000000000  bits/symbol
         Modulation Type: 8QAM
         Chromatic Dispersion 0 ps/nm
         Configured CD-MIN -48000 ps/nm  CD-MAX 48000 ps/nm
         Polarization Mode Dispersion = 0.0 ps
         Second Order Polarization Mode Dispersion = 29.00 ps^2
         Optical Signal to Noise Ratio = 36.10 dB
         SNR = 17.50 dB
         Polarization Dependent Loss = 0.50 dB
         Polarization Change Rate = 0.00 rad/s
         Differential Group Delay = 1.00 ps
Transceiver Vendor Details
         Form Factor            : CIM8
         Name                   : CISCO-ACACIA
         Part Number            : 10-3500-01
         Rev Number             : 01
         Serial Number          : ACA24480037
         PID                    : CIM8-C-K9
         VID                    : VES1
         Date Code(yy/mm/dd)    : 23/11/10
         Fiber Connector Type: LC
         Otn Application Code: Not Set
         Sonet Application Code: Not Set
         Ethernet Compliance Code: Not set
```

```
Transceiver Temperature : 46 Celsius
AINS Soak               : None
AINS Timer              : 0h, 0m
AINS remaining time     : 0 seconds
```

2. Run the **commit** command to apply the changes.

Configure receive power threshold

Use this procedure to configure the high and low optical power thresholds that determine alarm behavior for received signals on 1.2T, 2.4TX, and 2.4T optical cards.

Use this task to configure the high and low threshold of the total optical signal power of the received signal on the 1.2T, 2.4TX, and 2.4T cards.

The range is -400 to 300 (in the units of 0.1 dBm).

Procedure

1. Enter the **rx-high-threshold***rx-high***rx-low-threshold***rx-lowR/S/I/P* command to configure the high and low receive power threshold.

   Example

   This sample configures the high receive power threshold on the controller optics.

```
RP/0/RP0/CPU0:ios#configure
RP/0/RP0/CPU0:ios(config)#controller optics 0/0/0/7
RP/0/RP0/CPU0:ios(config-Optics)#rx-high-threshold -20
RP/0/RP0/CPU0:ios(config-Optics)#rx-low-threshold -30
RP/0/RP0/CPU0:ios(config-Optics)#commit
```

   This sample shows the high receive power threshold configured on the controller optics.

```
RP/0/RP0/CPU0:ios#show controllers optics 0/0/0/7
Fri Nov 12 10:58:50.595 UTC
Controller State: Up
Transport Admin State: In Service
Laser State: On
LED State: Yellow
Optics Status
         Optics Type:  CIM8 DWDM
         DWDM carrier Info: C BAND, MSA ITU Channel=61, Frequency=193.10THz,

         Wavelength=1552.524nm

         Alarm Status:
         -------------
         Detected Alarms:
                 HIGH-RX-PWR   LOW-TX-PWR
                 HIGH-DGD

         LOS/LOL/Fault Status:
```

```
         Alarm Statistics:

         -------------
         HIGH-RX-PWR = 1            LOW-RX-PWR = 0
         HIGH-TX-PWR = 0            LOW-TX-PWR = 1
         HIGH-LBC = 0               HIGH-DGD = 6
         OOR-CD = 0                 OSNR = 0
         WVL-OOL = 0                MEA  = 0
         IMPROPER-REM = 1
         TX-POWER-PROV-MISMATCH = 0
         Laser Bias Current = 0.0 %
         Actual TX Power = 0.97 dBm
         RX Power = -0.53 dBm
         RX Signal Power = -1.20 dBm
         Frequency Offset = 63 MHz

         Performance Monitoring: Enable

         THRESHOLD VALUES
         ----------------

         Parameter                 High Alarm  Low Alarm  High Warning  Low
Warning
         ------------------------  ----------  ---------  ------------
-----------
         Rx Power Threshold(dBm)         -2.0       -3.0           0.0
    0.0
         Tx Power Threshold(dBm)          4.0        2.0           0.0
    0.0
         LBC Threshold(mA)                N/A        N/A          0.00
   0.00

         LBC High Threshold = 55 %
         Configured Tx Power = 1.00 dBm
         Configured CD High Threshold = 2400 ps/nm
         Configured CD lower Threshold = -2400 ps/nm
         Configured OSNR lower Threshold = 0.40 dB
         Configured DGD Higher Threshold = 0.30 ps
         Baud Rate =  63.1394679230 GBd
         Bits per Symbol = 3.0000000000  bits/symbol
         Modulation Type: 8QAM
         Chromatic Dispersion 0 ps/nm
         Configured CD-MIN -48000 ps/nm  CD-MAX 48000 ps/nm
         Polarization Mode Dispersion = 0.0 ps
         Second Order Polarization Mode Dispersion = 29.00 ps^2
         Optical Signal to Noise Ratio = 36.10 dB
         SNR = 17.50 dB
         Polarization Dependent Loss = 0.50 dB
         Polarization Change Rate = 0.00 rad/s
         Differential Group Delay = 1.00 ps

Transceiver Vendor Details

         Form Factor            : CIM8
         Name                   : CISCO-ACACIA
         Part Number            : 10-3500-01
         Rev Number             : 01
         Serial Number          : ACA24480037
         PID                    : CIM8-C-K9
         VID                    : VES1
         Date Code(yy/mm/dd)    : 23/11/10
```

```
          Fiber Connector Type: LC
          Otn Application Code: Not Set
          Sonet Application Code: Not Set
          Ethernet Compliance Code: Not set

Transceiver Temperature : 46 Celsius
AINS Soak                : None
AINS Timer               : 0h, 0m
AINS remaining time      : 0 seconds
```

2. Run the **commit** command to apply the changes.

Frequency

Use this procedure to configure the frequency on trunk ports of transponder line cards to ensure compatibility and optimal performance.

Use this task to configure the frequency on trunk ports of the transponder line cards.

This table lists the frequency range with grid spacing supported on the line card.

Line card	Frequency range (THz)	Grid spacing
1.2T	191.25 to 196.1	50GHz and 100MHz
1.2TL [4]	186.1 to 190.85	100MHz
2.4T	191.25 to 196.1	50GHz and 100MHz
2.4TX using C band trunk pluggables	191.25 to 196.1	50GHz and 100MHz
2.4TX using L band trunk pluggables	186.15 to 190.925	100MHz
QXP	191.275 to 196.125	50GHz and 100MHz

Procedure

1. Run the **controller optics***Rack/Slot/Instance/Port***dwdm-carrier** {**100MHz-grid frequency** *frequency*} | {**50GHz-grid** [**frequency** *frequency*} command to configure the wavelength.
2. Run the **commit** command to apply the changes.

Change the trunk port frequency on a transponder card

Use this procedure to configure the optical signal frequency for the trunk port on a transponder card to match operational requirements.

Use this task when you need to modify the optical signal frequency on the trunk port on the transponder cards.

[4] Only non-ITU channels are supported

Procedure

1. Run the **config** command to enter the global configuration mode.
2. Run the **shutdown** command in optics configuration mode to shutdown the trunk port.

   Example

```
RP/0/RP0/CPU0:ios(config)#controller optics 0/2/0/0
RP/0/RP0/CPU0:ios(config-Optics)#shutdown
RP/0/RP0/CPU0:ios(config-Optics)#commit
Fri Jul 11 07:19:30.624 UTC
RP/0/RP0/CPU0:ios(config-Optics)#
```

   The interface at trunk port 0 is shut down.
3. Run the **dwdm-carrier 100MHz-grid frequency** *<frequency>* command to set the new frequency.

   Example

```
RP/0/RP0/CPU0:ios(config-Optics)#dwdm-carrier 100MHz-grid frequency 1911500
Fri Jul 11 07:20:17.234 UTC
WARNING! Changing channel/wavelength/frequency can impact traffic
RP/0/RP0/CPU0:ios(config-Optics)#commit
Fri Jul 11 07:20:19.905 UTC
RP/0/RP0/CPU0:ios(config-Optics)#
```

   Note

   Changing the trunk port frequency can impact traffic.

   The frequency for the 100 MHz grid channel is set to 1911500.
4. Run the **no shutdown** command in optics configuration mode to bring the port back up.

   Example

```
RP/0/RP0/CPU0:ios(config-Optics)#no shutdown
RP/0/RP0/CPU0:ios(config-Optics)#commit
Fri Jul 11 07:20:57.198 UTC
RP/0/RP0/CPU0:ios(config-Optics)#
```

Note

If you configure the frequency and use the no shutdown command in the same batch, the no shutdown command is processed first, followed by the new frequency. This means the trunk interface transmits at the previous frequency for a shorter time.

The channel resumes operation at the new frequency. The channel on the trunk port now operates at the configured frequency.

CCMD-16 controllers

This section describes the types, automatic creation, and viewing commands for CCMD-16 controllers on NCS1K14-CCMD-16-C and NCS1K14-CCMD-16-L cards.

The NCS1K14-CCMD-16-C and NCS1K14-CCMD-16-L cards have two types of controllers.

- OCH controllers
- OMS controllers

When the NCS1K14-CCMD-16-C and NCS1K14-CCMD-16-L cards become operational, both the OMS and OCH controllers are automatically created by default.

View OCH controller and parameters

Use this procedure to verify the active OCH controllers and their operational parameters using system commands

Use this task to view an OCH contollers and parameters.

When you bring up the nodes with NCS1K14-CCMD-16-C and NCS1K14-CCMD-16-L cards, the OCH controllers are automatically created by default. The OCH controllers for the NCS1K14-CCMD-16-C and NCS1K14-CCMD-16-L cards are:

Table 39: Supported interfaces

Card	Port type	OCH ports	Interfaces
NCS1K14-CCMD-16-C	LC Ports	16	och R/S/I/1 to och R/S/I/16
NCS1K14-CCMD-16-L	LC Ports	16	och R/S/I/1 to och R/S/I/16

Note

R/S/I/P stands for Rack/Slot/Instance/Port.

Procedure

1. Run the **show controllers och** command to view the OCH controllers.

   Example

   This output shows the active OCH controllers in *Slot 0* from *port 1 to 16*.

   Output Example

```
0/0/0/1                Och Interface Instance
  0/0/0/10               Och Interface Instance
  0/0/0/11               Och Interface Instance
  0/0/0/12               Och Interface Instance
  0/0/0/13               Och Interface Instance
  0/0/0/14               Och Interface Instance
  0/0/0/15               Och Interface Instance
  0/0/0/16               Och Interface Instance
  0/0/0/2                Och Interface Instance
  0/0/0/3                Och Interface Instance
  0/0/0/4                Och Interface Instance
  0/0/0/5                Och Interface Instance
  0/0/0/6                Och Interface Instance
  0/0/0/7                Och Interface Instance
  0/0/0/8                Och Interface Instance
  0/0/0/9                Och Interface Instance
```

2. Run the **show controllers** command to view the parameters of an OCH controller.

   Example

   This output shows the parameters of the OCH controller.

   Output Example

```
RP/0/RP0/CPU0:ios#show controllers och 0/1/0/1
Thu Oct 12 09:26:38.555 UTC

 Controller State: Up

 Transport Admin State: In Service

 LED State: Green

         Alarm Status:
         -------------
         Detected Alarms: None


         Alarm Statistics:
```

```
        -----------------
        RX-LOS-P = 0
        TX-POWER-FAIL-LOW = 0

        Parameter Statistics:
        ---------------------
        Tx Power = -2.30 dBm
        Rx Power = -0.70 dBm
```

View OMS controller and parameters

Use this procedure to configure and view OMS controllers and their operational parameters on NCS1K14-CCMD-16-C and NCS1K14-CCMD-16-L cards.

Use this task to view an OMS controller and parameters.

When you bring up the nodes with NCS1K14-CCMD-16-C and NCS1K14-CCMD-16-L cards, the OMS controllers are automatically created by default.

The OMS controllers for the NCS1K14-CCMD-16-C and NCS1K14-CCMD-16-L cards are:

Table 40: Supported interfaces

Card	Port type	OMS ports	Interfaces
NCS1K14-CCMD-16-C	LC Ports	1	oms R/S/I/0
NCS1K14-CCMD-16-L	LC Ports	1	oms R/S/I/0

Note

R/S/I/P stands for Rack/Slot/Instance/Port.

Procedure

1. Run the **show controllers oms ?** command to view the OMS controllers.

   Example

   This output shows the active OMS controller in *Slot 0*.

2. Run the **show controllers** command to view the parameters of an OMS controller.

   Example

   This output shows the parameters of the an OMS controller.

   Output Example

```
RP/0/RP0/CPU0:ios#show controllers oms 0/1/0/0
Thu Oct 12 09:23:35.297 UTC
```

```
Controller State: Up
Transport Admin State: In Service
LED State: Red
        Alarm Status:
        -------------
        Detected Alarms:
                HI-TX-BR-PWR

        Alarm Statistics:
        -----------------
        RX-LOS-P = 3
        TX-POWER-FAIL-LOW = 0
        INGRESS-AMPLI-GAIN-LOW = 0
        INGRESS-AMPLI-GAIN-HIGH = 0
        EGRESS-AUTO-LASER-SHUT = 0
        EGRESS-AMPLI-GAIN-LOW = 0
        EGRESS-AMPLI-GAIN-HIGH = 0
        HI-TX-BR-PWR = 2


        Parameter Statistics:
        ---------------------
        Tx Power = -3.40 dBm
        Rx Power = -2.30 dBm
        Rx Voa Attenuation = 5.0 dB
        Tx Voa Attenuation = 5.0 dB
        Ingress Ampli Mode = Gain
        Ingress Ampli Gain = 5.0 dB
        Ingress Ampli Tilt = 0.0 dB
        Ingress Ampli OSRI = OFF
        Egress Ampli Mode = Gain
        Egress Ampli Gain = 2.0 dB
        Egress Ampli Tilt = 0.0 dB
        Egress Ampli Gain Range = Normal
        Egress Ampli OSRI = OFF
        Egress Ampli BR Power = -12.90 dBm
        Egress Ampli BR Ratio = -9.39 dB


        Configured Parameters:
        -------------
        Rx Voa Attenuation = 5.0 dB
        Tx Voa Attenuation = 5.0 dB
        Ingress Ampli Mode = Gain
        Ingress Ampli Gain = 5.0 dB
        Ingress Ampli Power = -9.0 dBm
        Ingress Ampli OSRI = OFF
        Egress Ampli Mode = Gain
        Egress Ampli Gain = 2.0 dB
        Egress Ampli Power = 0.0 dBm
        Egress Ampli Gain Range = Normal
        Egress Ampli OSRI = OFF
        BR High Threshold = -17.0 dBm
```

Configure controller parameters for NCS1K14-CCMD-16-C and NCS1K14-CCMD-16-L cards

This section lists and explains the software-supported controller parameters, operational attributes, and CLI commands for NCS1K14-CCMD-16-C and NCS1K14-CCMD-16-L line cards.

Table 41: Feature History

Feature Name	Release Information	Feature Description
Supported Functionalities of CCMD-16-C and CCMD-16-L Line Cards	Cisco IOS XR Release 7.11.1	Supported Functionalities of CCMD-16-C and CCMD-16-L Line Cards: The software supports Variable Optical Attenuator (VoA), power monitoring and reporting of parameters to the controllers at the OCH and OMS level. It helps in configuring the amplifier parameters for optimizing signal transmissions. The software also supports in-band and out-of-band tone detection and monitoring and reporting of alarms.

This chapter describes the controller configuration using EDFA, VoA, optical safety, and photodiode parameters which are supported on NCS1K14-CCMD-16-C and NCS1K14-CCMD-16-L line cards.

Table 42: Basic Controller Configuration Parameters

Parameter	CLI	Description

EDFA-ADD Control Mode	`controller Oms R/S/I/P` `egress-ampli-mode power-control`	Here the default mode is gain-control. Use this command to change the mode to power-control mode. You can delete this configuration to revert to gain-control mode.
EDFA-ADD Power	`controller Oms R/S/I/P` `egress-ampli-power <val in 0.1 dBm>`	This is the target output power configuration for the EDFA located on COM-Tx. If the output power is not configured, then a default value is used by the system. You can find the applied target output power by using the **show controller oms** output.
EDFA-ADD Gain Range	`controller Oms R/S/I/P` `egress-ampli-gain-range <normal | extended>`	

If you change the gain range from Normal to Extended or the opposite way, without updating the proper gain value for the new gain range, then the following may happen:

- The EDFA switches to the preconfigured or default value of the gain causing a mismatch between the operational and configured gain.
- The gain configuration is lost during the reload of software or line card, as the configured gain mismatches with the latest gain-range. This may result in traffic interruption during these reload operations.

Hence, we recommend that you explicitly configure the gain range mode as normal or extended, and the corresponding gain values for each mode to get the expected results.

The following are a few example scenarios that may not work as expected:

- Scenario 1:

  Current running config:

  ```
  controller Oms R/S/I/P
   egress-ampli-gain-range
  extended
   egress-ampli-gain <gain value
   in extended mode>
  ```

  New applied config:

  ```
  controller Oms R/S/I/P
   no egress-ampli-gain-range
  extended
   commit
  ```

- Scenario 2:

  Current running config:

  ```
  controller Oms R/S/I/P
   egress-ampli-gain-range
  extended
   egress-ampli-gain <gain value
   in extended mode>
  ```

  New applied config:

  ```
  controller Oms R/S/I/P
   egress-ampli-gain-range
  Normal
   commit
  ```

- Scenario 3:

Current running config:

```
controller Oms R/S/I/P
egress-ampli-gain <gain value
 in normal mode>
```

New applied config:

```
controller Oms R/S/I/P
egress-ampli-gain-range
extended
commit
```

The following is another example scenario that involves commit-replace command where you replace the existing gain configuration that does not have explicitly configured gain-range, with new gain-range and gain value.

Scenario 4:

Current running config:

```
controller Oms R/S/I/P
egress-ampli-gain <gain value
in normal mode>
```

New applied config:

```
…….
controller Oms R/S/I/P
egress-ampli-gain-range extended
egress-ampli-gain <gain value
in extended mode>
commit replace
```

EDFA-ADD Gain

```
controller Oms R/S/I/P
```

```
egress-ampli-gain <val in 0.1
dB>
```

This is used for configuring gain for the EDFA located on the COM-Tx port. If the gain is not configured, then a default value is used by the system. The **show controller oms** output can be used for finding the applied gain.

EDFA-DROP Control Mode

```
controller Oms R/S/I/P
```

```
ingress-ampli-mode power-control
```

The default mode is gain-control.

Use this command to change the mode to power-control mode.

You can delete this configuration to revert to gain-control mode.

EDFA-DROP Power

```
controller Oms R/S/I/P
```

```
ingress-ampli-power <vale in 0.1
 dBm>
```

This is the target output power configuration for the EDFA located on COM-Rx. If the output power is not configured, then a default value is used by the system. You can find the applied target output power by using the **show controller oms** output.

EDFA-DROP Gain

	`controller Oms R/S/I/P` `ingress-ampli-gain <val in 0.1 dB>`	This is used for configuring gain for the EDFA located on the COM-Rx port. If the gain is not configured, then a default value is used by the system. The **show controller oms** output can be used for finding the applied gain.

VoA Attenuation	`controller Oms R/S/I/P`
	`tx-voa-attenuation <val in 0.1 dB>`
	`rx-voa-attenuation <val in 01. dB>`
		This is used to configure VoA attenuation for COM-Tx and COM-Rx ports. The system picks a default value if the gain is not configured. The **show controller oms** output can be used for finding the applied attenuation.

Shutdown (COM Port)	`controller Oms R/S/I/P` `shutdown`	COM-Tx and Rx ports are put in Out of Service (OOS) when this command is executed. This turns off the EDFA devices on both COM-Tx and COM-Rx ports and the respective alarms are masked. Here the default value is 'unshut'.
Shutdown (Ch Ports)	`controller Och R/S/I/P` `shutdown`	The channel port will be marked as out-of-service.

Configure Operational Parameters

The different operational parameters supported are given below.

Table 43: Operational Parameters

Parameter	CLI	Description
Photo Diodes (COM Port)	**OMS Controller** `Tx Power and Rx Power`	Rx Power = Inband power + OOB Tx Power = Inband power + OOB It reports the power transmitted and received on the OMS port. The OOB power received on COM-Rx is looped back to COM-Tx with some loss due to the insertion-loss on the loop back path.
Photo Diodes (CH Ports)	**OCH Controller** `Tx Power and Rx Power`	It reports the power transmitted and received on the channel ports.

Amplifier Parameters	**OMS Controller**	Egress and ingress amplifier parameters.
	`Ingress Ampli Mode`	
	`Ingress Ampli Gain`	
	`Ingress Ampli Tilt`	
	`Ingress Ampli OSRI`	
	`Egress Ampli Mode`	
	`Egress Ampli Gain`	
	`Egress Ampli Tilt`	
	`Egress Ampli Gain Range`	
	`Egress Ampli OSRI`	
	`Egress Ampli BR Power`	
	`Egress Ampli BR Ratio`	
VoA Parameters	**OMS Controller**	VoA attenuation parameters.
	`Tx VoA Attenuation and Rx VoA Attenuation`	

Configure Optical Safety Parameters

Use the following parameters for configuring optical safety.

Table 44: Optical Safety Parameters

Parameter	CLI	Description

OSRI	`controller Oms R/S/I/P`
	`egress-ampli-osri`
	`ingress-ampli-osri`
		Use this configuration to enable or Disable Optical Safety Remote Interlock (OSRI) on the amplifiers located on COM-Tx and COM-Rx ports. The default value is 'Off'. The **show controller oms** output can be used for finding the OSRI configuration and status.

Verify Rx VOA fixed ratio to zero

Use this procedure to configure the Rx VOA attenuation to a fixed ratio of zero to disable the Rx VOA completely.

Use this task to configure the Rx VOA attenuation to a fixed ratio of zero, effectively disabling the Rx VOA entirely.

Warning

Disabling Rx VOA attenuation in certain scenarios may destabilize the network. Practice caution and contact the Cisco TAC team for more information.

Procedure

Run the **configure** command to enter the global configuration mode.

Example

This is a sample configuration which sets the rx-voa fixed-ratio to zero.

```
RP/0/RP0/CPU0:NE80#configur
Tue Aug 6 07:44:28.125 UTC
Current Configuration Session  Line       User     Date
Lock
00001000-00001569-00000000 vty0 cisco Tue Aug 6 05:33:16 2024
RP/0/RP0/CPU0:NE80(config)#controller optics 0/2/0/0 rx-voa fixed-ratio 0
RP/0/RP0/CPU0:NE80(config)#controller optics 0/2/0/7 rx-voa fixed-ratio 0
RP/0/RP0/CPU0:NE80(config)#commit
Tue Aug 6 07:44:48.545 UTC
RP/0/RP0/CPU0:NE80(config)#end
```

Verify Rx VOA fixed ratio to zero

Use this procedure to verify the Rx VOA attenuation is disabled by confirming its fixed ratio is set to zero.

Use this task to verify the Rx VOA attenuation to a fixed ratio of zero, effectively disabling the Rx VOA entirely.

Warning

Disabling Rx VOA attenuation in certain scenarios may destabilize the network. Practice caution and contact the Cisco TAC team for more information.

Procedure

1. Run the `show running-config controller` command to verify the rx-voa fixed ratio is set to fixed ratio zero.

   Example

```
RP/0/RP0/CPU0:N112#show running-config controller optics 0/2/0/0
Thu May 16 09:19:51.223 UTC
description optics0/2/0/0
dwdm-carrier 100MHz-grid frequency 1909000
rx-voa fixed-ratio 0
```

2. Run the `show controllers optics` command to verify whether the rx-voa fixed-ratio is set to fixed ratio zero.

   Example

```
RP/0/RP0/CPU0:123#show controllers optics 0/2/0/0
Controller State: Up
Transport Admin State: In Service
Laser State: On
LED State: Green
Optics Status
Optics Type: CIM8 DWDM
DWDM carrier Info: C BAND, MSA ITU Channel=61, Frequency=193.10THz,
Wavelength=1552.524nm
Alarm Status:
-------------
Detected Alarms: None
LOS/LOL/Fault Status:
Alarm Statistics:
-------------
HIGH-RX-PWR = 0 LOW-RX-PWR = 0
HIGH-TX-PWR = 0 LOW-TX-PWR = 0
HIGH-LBC = 0 HIGH-DGD = 0
OOR-CD = 0 OSNR = 0
WVL-OOL = 0 MEA = 0
IMPROPER-REM = 0
TX-POWER-PROV-MISMATCH = 0
Laser Bias Current = 0.0 %
Actual TX Power = 2.00 dBm
RX Power = -0.01 dBm
RX Signal Power = 1.94 dBm
Frequency Offset = 0 MHz
Performance Monitoring: Enable
THRESHOLD VALUES
----------------
```

```
Parameter High Alarm Low Alarm High Warning Low Warning
------------------------ ---------- --------- ------------ -----------
Rx Power Threshold(dBm) 13.0 -17.0 0.0 0.0
Tx Power Threshold(dBm) 5.0 -13.0 0.0 0.0
LBC Threshold(mA) N/A N/A 0.00 0.00
LBC High Threshold = 90 %
Configured Tx Power = 2.00 dBm
Configured CD High Threshold = 180000 ps/nm
Configured CD lower Threshold = -180000 ps/nm
Configured OSNR lower Threshold = 20.40 dB
Configured DGD Higher Threshold = 88.00 ps
Baud Rate = 137.9783940000 GBd
Bits per Symbol = 3.5200000000 bits/symbol
Modulation Type: PCS
Chromatic Dispersion 0 ps/nm
Configured CD-MIN -10000 ps/nm CD-MAX 48000 ps/nm
Polarization Mode Dispersion = 0.0 ps
Second Order Polarization Mode Dispersion = 44.00 ps^2
Optical Signal to Noise Ratio = 36.60 dB
SNR = 18.20 dB
Polarization Dependent Loss = 0.40 dB
Polarization Change Rate = 4639.00 rad/s
Differential Group Delay = 2.00 ps
Filter Roll Off Factor : 0.100
Rx VOA Fixed Ratio : 0.00 dB
NLEQ Compensation Mode : 0
Cross Polarization Gain Mode : 10
Proprietary Submarine Parameters
Type : 1 Value : 0
Type : 2 Value : 0
Type : 3 Value : 0
Type : 4 Value : 0
Type : 5 Value : 10485760
Transceiver Vendor Details
Form Factor : CIM8
Name : ACACIA
Part Number : 10-100508-01
Rev Number : 10
Serial Number : N/A
PID : CIM8-CE-K9
VID : VES1
Firmware Version : Major.Minor.Build
Active : 80.130.19
Inactive : 80.130.19
Date Code(yy/mm/dd) : 24/06/18
Fiber Connector Type: LC
Otn Application Code: Not Set
Sonet Application Code: Not Set
Ethernet Compliance Code: Not set
Transceiver Temperature : 36 Celsius
AINS Soak : None
AINS Timer : 0h, 0m
AINS remaining time : 0 seconds
```

Last link flap detection

This section lists the output formats, supported controllers, and operational details for the last link flap detection parameter in Cisco NCS 1014 transponder controllers.

Table 45: Feature History

Feature Name	Release Information	Feature Description
Last Link Flap Detection for Transponder Controllers	Cisco IOS XR Release 24.4.1	This feature introduces the detection of the last link flap for various transponder controllers. It provides the elapsed time since the occurrence of the last flap for each controller in the `show controllers` output. Link flap refers to the state transition of controllers from UP state to another state or from other states to UP state. This information enables network administrators to effectively monitor and troubleshoot signal stability and performance across the network. Parameter added: • **Last link flapped***value*

Link flap refers to the state transition of controllers from UP state to another state or from other states to UP state. The common cause is related to bad, unsupported, or nonstandard cable or Small Form-Factor Pluggable (SFP) or related to other link synchronization issues. The cause for link flapping can be intermittent or permanent.

NCS 1014 node detects the flapping of link in a signal for various transponder controllers. It provides the time that is elapsed from the occurrence of the last link flap through the *last link flapped* parameter in the **show controllers** output.

The **show controller** output displays the time-elapsed value for the last link flap in seconds, minutes, hours, days, weeks, and years based on the occurrence of the event.

Examples of last link flap value	Meaning of the value
00:00:10	Last link flapped 10 seconds ago.
1d12h	Last link flapped one day and 12 hours ago.
1y00w	Last link flapped one year ago.

The transponder controllers supporting the last link flap parameters are:

- Ethernet
- CoherentDSP
- ODU
- OTU
- Optics

Output examples for each controller

Ethernet controller

The output provides information about a link flap on Ethernet controller that happened one year ago. It highlights the *Last link flapped* value in *1y00w* format for **show controllers TenGigECtrlr 0/1/0/0**.

```
RP/0/0/CPU0:ios#show controllers TenGigECtrlr 0/1/0/0
Fri Sep 27 14:38:16.645 IST
Operational data for interface TenGigECtrlr0/1/0/0:
State:
```

```
    Administrative state: enabled
    Operational state: Up
    Maintenance: Enabled
    AINS Soak: None
    Insert Idle Ingress: Disabled
    Insert Idle Egress: Disabled
    Last link flapped: 1y00w
```

Optics controller

The output provides information about a link flap on optics controller that happened four seconds ago. It highlights the *Last link flapped* value in the *HH:MM:SS* format for **show controllers Optics 0/2/0/2**.

```
RP/0/0/CPU0:ios#show controllers Optics 0/2/0/2
Thu Oct 10 12:39:37.767 UTC
Controller State: Up
Transport Admin State: In Service
Laser State: On
LED State: Green
Last link flapped: 00:00:04
         Optics not present
         Optics Type: Unavailable
         DWDM Carrier Info: Unavailable, MSA ITU Channel= Unavailable,
Frequency= Unavailable , Wavelength= Unavailable
         TX Power = Unavailable
         RX Power = Unavailable
```

OTU controller

The output provides information about a link flap on OTU controller that happened ten seconds ago. It highlights the *Last link flapped* value in the *HH:MM:SS* format **show controllers OTU4 0/0/0/6**.

```
RP/0/0/CPU0:ios#show controllers OTU4 0/0/0/6
Thu Oct 10 12:57:13.777 UTC
Port                                          : OTU4 0/0/0/6
Controller State                              : Up
LED state                                     : Not Applicable
Last link flapped                             : 00:00:10
Inherited Secondary State                     : Normal
Configured Secondary State                    : Normal
Derived State                                 : In Service
Loopback mode                                 : None
BER Thresholds                                : SF = 1.0E-6  SD = 1.0E-7
Performance Monitoring                        : Enable
Alarm Information:
LOS = 0 LOF = 0 LOM = 0
OOF = 0 OOM = 0 AIS = 0
IAE = 0 BIAE = 0        SF_BER = 0
SD_BER = 0      BDI = 0 TIM = 0
FECMISMATCH = 0 FEC-UNC = 0     FLEXO_GIDM = 0
FLEXO-MM = 0    FLEXO-LOM = 0   FLEXO-RDI = 0
FLEXO-LOF = 0
Detected Alarms                               : None
```

ODU controller

The output provides information about a link flap on ODU controller that happened 52 seconds ago. It highlights the *Last link flapped* value in the *HH:MM:SS* format **show controllers ODU4 0/0/0/6**.

```
RP/0/0/CPU0:ios#show controllers ODU4 0/0/0/6
Thu Oct 10 12:57:55.717 UTC
```

```
Port                                                : ODU4 0/0/0/6
Controller State                                    : Up
LED state                                           : Not Applicable
Last link flapped                                   : 00:00:52
Inherited Secondary state                           : Normal
Configured Secondary state                          : Normal
Derived State                                       : In Service
Loopback mode                                       : None
BER Thresholds                                      : SF = 1.0E-6  SD = 1.0E-7
Performance Monitoring                              : Disable
Path Monitoring Mode                                : Non-Intrusive Monitor
PM TIM-CA state                                     : Disable
Alarm Information:
AIS = 0 IAE = 0 BIAE = 0
SF_BER = 0      SD_BER = 0      BDI = 0
OCI = 0 LCK = 0 PTIM = 0
TIM = 0 CSF = 0 GFP LFD = 0
GFP LOCS = 0    GFP LOCCS = 0   GFP UPM = 0
Detected Alarms                                     : None
```

ODU-FLEX controller

The output provides information about a link flap on ODU-FLEX controller that happened one minute and 35 seconds ago. It highlights the *Last link flapped* value in the *HH:MM:SS* format **show controllers ODU-FLEX 0/3/0/0/*** .

```
RP/0/RP0/CPU0:ios#show controllers ODU-FLEX 0/3/0/0/*
Thu Oct 10 16:25:20.008 IST
Port                                                : ODU-FLEX 0/3/0/0/1
Controller State                                    : Up
Last link flapped                                   : 00:01:35
Inherited Secondary state                           : Normal
Configured Secondary state                          : Normal
Derived State                                       : In Service
Loopback mode                                       : None
BER Thresholds                                      : SF = 1.0E-6  SD = 1.0E-7
Performance Monitoring                              : Enable
Path Monitoring Mode                                : Operational
PM TIM-CA state                                     : Disable
```

CoherentDSP controller

The output provides information about a link flap on coherentDSP controller that happened one day and 12 hours ago. It highlights the *Last link flapped* value in *1d12h* format for **show controllers coherentDSP 0/2/0/0**.

```
RP/0/RP0/CPU0:ios#show  controllers coherentDSP 0/2/0/0
Tue Nov 26 06:20:08.673 UTC

Port                                                : CoherentDSP 0/2/0/0
Controller State                                    : Up
Last link flapped                                   : 1d12h

Inherited Secondary State                           : Normal
Configured Secondary State                          : Normal
Derived State                                       : In Service
Loopback mode                                       : None
BER Thresholds                                      : SF = 1.0E-5  SD = 1.0E-7
Performance Monitoring                              : Enable
Bandwidth                                           : 800.0Gb/s
Client Network mapping Type                         : Ethernet

Alarm Information:
LOS = 16        LOF = 0 LOM = 0
```

```
OOF = 0 OOM = 0 AIS = 0
IAE = 0 BIAE = 0        SF_BER = 0
SD_BER = 0      BDI = 0 TIM = 0
FECMISMATCH = 0 FEC-UNC = 2     FLEXO_GIDM = 0
FLEXO-MM = 0    FLEXO-LOM = 0   FLEXO-RDI = 15
FLEXO-LOF = 96
Detected Alarms                                    : None

Bit Error Rate Information
PREFEC  BER                                        : 1.52E-04
POSTFEC BER                                        : 0.00E+00
Q-Factor                                           : 11.20 dB

Q-Margin                                           : 4.80 dB

Instantaneous Q-Margin                             : 4.80 dB

TTI :
Remote hostname                           : Node126
Remote interface                          : CoherentDSP 0/2/0/0
Remote IP addr                            : 0.0.0.0

FEC mode                                           : Soft-Decision 15

Flexo-Mode                                         : Enable
Flexo Details:
Tx GID                                    : 1
TX IID                                    : 1, 2, 3, 4, 5, 6, 7, 8,
Rx GID                                    : 1
RX IID                                    : 1, 2, 3, 4, 5, 6, 7, 8,

AINS Soak                                          : None
AINS Timer                                         : 0h, 0m
AINS remaining time                                : 0 seconds
```

4 OTNSec Encryption on the NCS1K14-2.4T-K9 card

Topics:

- The need for high-speed encryption
- IKEv2 key features
- OTNSec encryption key features
- FIPS compliance for IKEv2 sessions

This section provides details on OTNSec encryption features, supported hardware, and software release information for NCS 1014 line cards.

The 2.4T line card now supports AES-256 GCM authenticated OTNSec encryption using pre-shared keys or certificate-based authentication, ensuring data confidentiality across optical links.

Table 46: Feature History

Feature Name	Release Information	Feature Description
OTNSec encryption and PPP support on the 2.4T card	Cisco IOS XR Release 25.2.1	The 2.4T line card now supports AES-256 GCM authenticated OTNSec encryption using pre-shared keys or certificate-based authentication, ensuring data confidentiality across optical links. Additionally, PPP over GCC enables secure transmission of control and encryption messages such as IKEv2 exchanges over built-in optical channels, enhancing security and manageability without relying on external interfaces.

The need for high-speed encryption

This section explains why high-speed encryption is critical for protecting data transmitted across network infrastructures.

Importance of network infrastructure security

Most of the emphasis on protecting networks today is focused on securing data within data centers. However, the infrastructure of networks that connect these data centers is equally vulnerable to calculated attacks.

Vulnerability of fiber-optic networks and the necessity of data encryption

As more sensitive information is transmitted across fiber-optic networks, cyber criminals are increasingly focused on intercepting data during its transit across these networks. With the rise in network or fiber-optic hacks, data protection is paramount. Encrypting any data that leaves data centers is becoming a crucial requirement for cloud operators.

Optical encryption

Optical encryption secures all data on the communications link in and out of a facility, rendering it undecipherable to hackers tapping into the fiber strand. Protecting data at high speeds or line rates is essential for data centers today.

Cisco NCS 1014 and OTNSec encryption

This section explains how OTNSec encryption technologies protect high-speed data transmitted across Cisco NCS 1014 network infrastructures.

Cisco NCS 1014 introduces AES256-based OTNSec encryption for 100GE and 400GE clients. Encryption is supported on the 2.4Tcard .

Role of IKEv2 protocol

OTNSec encryption uses the Internet Key Exchange Version 2 (IKEv2) protocol to negotiate and establish IKEv2 and OTNSec Security Associations (SA). IKEv2 is used for device authentication in an encryption session and provides pre-shared keys (PSK) or RSA certificate-based authentication.

General communication channel

General Communication Channel (GCC) is control channel used within the OTN. NCS 1014 supports GCC0 link.

The IKEv2 datagrams are carried as payloads using the point-to-point protocol (PPP) over the GCC channel.

Implementation of IKE sessions

To implement this, an IKE session is established between two endpoints, Site A and Site B, for overhead control plane communication between the two data centers. Data is encrypted at Site A using OTNSec encryption and decrypted at Site B.

The recommended deployment is to have a single IKEv2 session running over a GCC0 channel per trunk port which creates the child Security Associations (SA) for each of the OTNSec controllers that are configured on the trunk port.

Figure 11: OTNSec site-to-site example and components

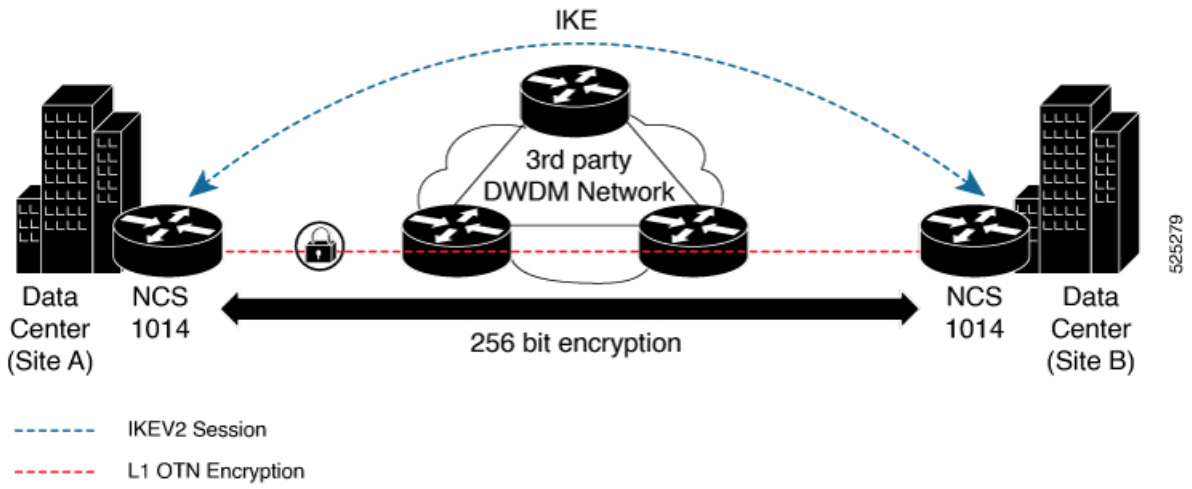

IKEv2 key features

This section explains the main attributes and constructs of IKEv2 protocols used for secure authentication and encryption in Cisco NCS network environments.

IKEv2 is a request and response encryption protocol that establishes and handles security associations (SA) in an authentication suite, such as OTNSec, to ensure secure traffic.

IKEv2 is defined in RFC 7296 and consists of the following constructs:

- Keyring
- IKEv2 profile
- IKEv2 proposal
- IKEv2 policy

Keyring

A keyring is a repository of symmetric and asymmetric pre-shared keys that is configured for a peer and identified using the IP address of the peer. The keyring is associated with an IKEv2 profile and therefore, caters to a set of peers that match the IKEv2 profile. This is a required configuration for the pre-shared keys authentication method that is used for NCS 1004.

Note

The certificate-based authentication that uses RSA signatures can be used instead of the keyring. If both methods of authentication are configured, the certificate-based authentication takes precedence. See IKEv2 certificate-based authentication on page 180.

IKEv2 profile

An IKEv2 profile is a repository of nonnegotiable parameters of the IKE SA, such as authentication method and services that are available to the authenticated peers that match the profile. The profile match lookup is done based on the IP address of the remote identity.

For security purposes, the IKE SAs have a lifetime that is defined in the IKEv2 profile. The lifetime range, in seconds, is from 120 to 86400. The SAs are rekeyed proactively before the expiry of the lifetime. The default lifetime is 86400.

An IKEv2 profile must be attached to an OTNSec configuration on the ODU controllers on both the IKEv2 initiator and responder. This is a required configuration.

IKEv2 proposal

An IKEv2 proposal is a collection of transforms that are used in the negotiation of IKE SAs as part of the IKE_SA_INIT exchange. The IKE2 proposal must be attached to an IKEv2 policy. This is an optional configuration. The transform types used in the negotiation are as follows:

- Encryption algorithm
- Integrity algorithm
- Pseudo-Random Function (PRF) algorithm
- Diffie-Hellman (DH) group

Note

The IKEv2 proposal must have at least one algorithm of each type. It is possible to specify multiple algorithms for each type; the order in which the algorithms are specified determines the precedence.

IKEv2 policy

IKEv2 employs policies that are configured on each peer to negotiate handshakes between the two peers. An IKEv2 policy contains proposals that are used to negotiate the encryption, integrity, PRF algorithms, and DH group in the SA_INIT exchange. An IKEv2 policy is selected based on the local IP address. This is an optional configuration.

Note

The default IKEv2 proposal is used with default IKEv2 policy in the absence of any user-defined policy.

How IKEv2 works

This section describes the IKEv2 key exchange process, the initiator and responder roles, and the main stages involved in establishing secure communication between network nodes.

In this example, there are two nodes. The node with the lower IP address always acts as the initiator. In this case, node A (R1) has the role of an initiator while Node B (R2) has the role of a responder.

Figure 12: Configuration schema

IKEv2 communications rely on structured **request-response pairs** called exchanges as shown in this image.

Figure 13: IKEv2 Exchanges

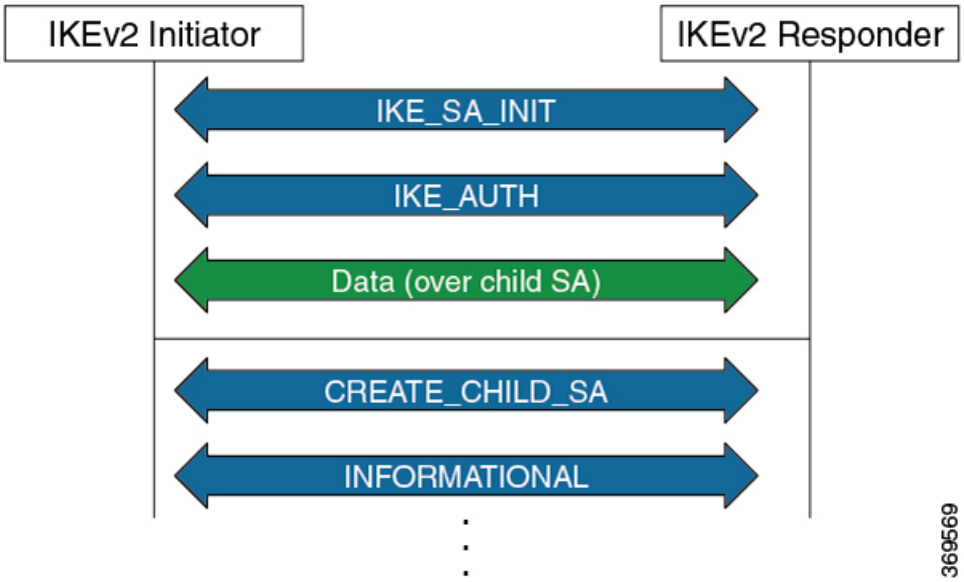

- IKE performs mutual authentication between two endpoints and establishes an IKE Security Association (SA). At first it exchanges two messages: IKE_SA_INIT and the IKE_AUTH to establish an IKE SA/
- Subsequently IKE exchanges either CREATE_CHILD_SA or INFORMATIONAL messages.

Benefits of IKEv2

This section explains the advantages and features that IKEv2 offers for secure and reliable VPN communications.

The benefits of IKEv2 include:

- Reliability and error-processing: IKEv2 uses sequence numbers and acknowledgments to provide reliability and mandates some error-processing logistics and shared state management (windowing).
- Security features: IKEv2 does not process a request until it determines the requester, helping to mitigate DoS attacks.
- Dead Peer Detection: IKEv2 provides built-in support for Dead Peer Detection (DPD), which periodically confirms the availability of the peer node. When there is no response from the peer node, the system attempts to establish the session again.

IKEv2 certificate-based authentication

This section explains how IKEv2 certificate-based authentication establishes secure communication using RSA digital signatures and public key infrastructure.

IKEv2 can use Rivest, Shamir, and Adelman (RSA) digital signatures to authenticate peer devices before setting up Security Associations (SAs). RSA signatures employ a PKI-based method of authentication.

Certification authority interoperability

Certification Authority (CA) interoperability permits Cisco NCS 1014 devices and CAs to communicate for obtaining and using digital certificates. The CA manages certificate requests and issues certificates to participating network devices.

Public key cryptography in RSA

Public key cryptography uses key pairs, such as those in the RSA encryption system, that consist of a public key and a private key. These keys act as complements; anything encrypted with one key can be decrypted with the other.

Digital signatures in RSA

igital signatures are created through encrypting data with a user's private key. The receiver uses the sender's public key to decrypt the message and verify its signature.The ability to decrypt the message with the sender's public key indicates that the holder of the private key, the sender, must have created the message.

Configuration workflow

This section explains how OTNSec encryption with IKEv2 is configured on NCS 1014, including prerequisite steps and both CA-based and PSK-based authentication methods.

This section describes the workflow to configure IKEv2 and OTNSec encryption on NCS 1014.

Figure 14: OTNSec configuration workflow

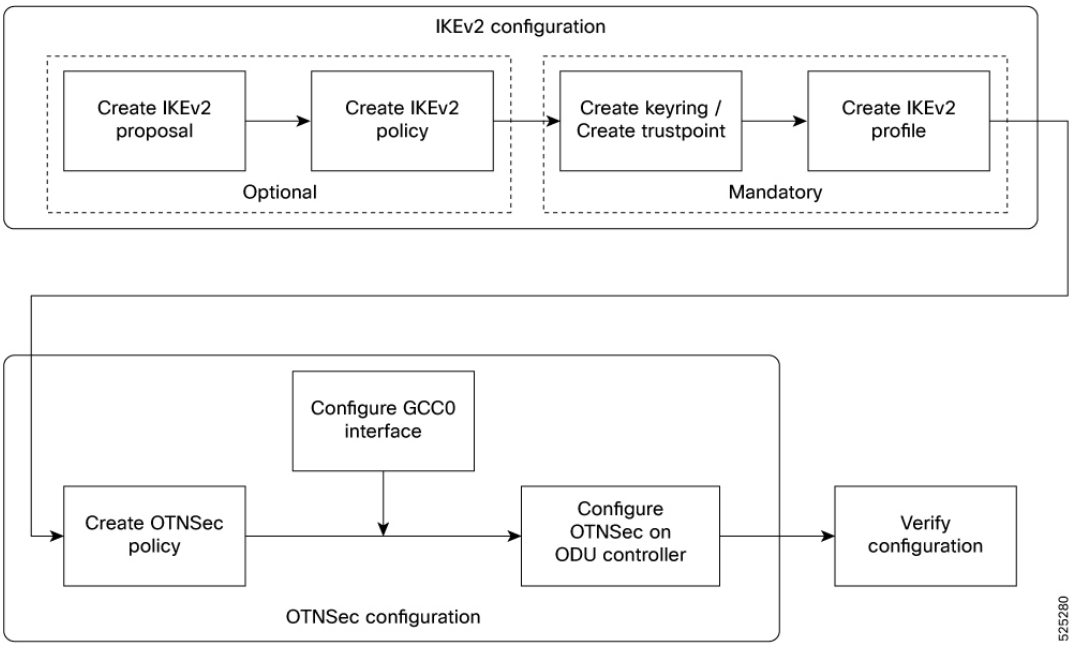

Prerequisites

Before proceeding with configuring the OTNSec using IKEV2, ensure that you have:

- Installed the required k9sec.rpm package
- Configured the line card in the muxponder slice mode. See Set up the client and trunk rate in the muxponder mode for the 2.4TX card on page 84.

You can use two authentication methods:

- Pre-shared keys (PSKs)
- Certificate-authority (CA)

The configuration workflow using CA-based authentication method involves these sequences:

1. Configure IKEv2 certificate-based authentication on page 182
2. Configuring IKEv2
   - Configure the parameters for IKEv2 proposal on page 186
   - Create an IKEv2 policy on page 186
   - Create an IKEv2 profile that will be attached to the OTNSec profile (CA authentication method) on page 189
3. Configuring OTNSec
   - Configure the OTNSec policy on page 190
   - Configure the GCC0 interface on page 191
   - Configure the OTNSec on ODU flex controller on page 192
4. Verify IKEv2 and OTNSec configurations on page 193

The configuration workflow using PSK-based authentication method involves these sequences:

1. Configuring IKEv2
   - Configure the parameters for IKEv2 proposal on page 186
   - Create an IKEv2 policy on page 186
   - Create a keyring with pre shared keys on page 187
   - Create an IKEv2 profile that will be attached to the OTNSec profile (PSK authentication method) on page 189
2. Configuring OTNSec
   - Configure the OTNSec policy on page 190
   - Configure the GCC0 interface on page 191
   - Configure the OTNSec on ODU flex controller on page 192
3. Verify IKEv2 and OTNSec configurations on page 193

Configure IKEv2 certificate-based authentication

Use this procedure to configure IKEv2 certificate-based authentication using a Cisco-supported CA, generating key pairs, establishing trustpoints, and enrolling device certificates for secure interoperability.

Follow these steps to configure IKEv2 certificate-based authentication.

Before you begin

You need to have a CA available to your network before you configure this interoperability feature. The CA must support Cisco Systems PKI protocol, the simple certificate enrollment protocol (SCEP).

Procedure

---

1. Configure router IP domain name of the router if it is not already configured.

The IP domain name is required because the router assigns a fully qualified domain name (FQDN) to the keys and certificates used by OTNSec, and the FQDN is based on the hostname and IP domain name you assign to the router.

a) Enter the **domain name** command to configure the domain name.
b) Commit the changes

Example

```
RP/0/RP0/CPU0:ios#configure
            RP/0/RP0/CPU0:ios(config)#domain name cisco.com
            RP/0/RP0/CPU0:ios(config)#commit
            RP/0/RP0/CPU0:ios(config)#end
```

2. Enter the **crypto key generate rsa** *keypair-label* command to generate RSA key pair.

Example

```
RP/0/RP0/CPU0:ios#crypto key generate rsa ioxRsa-key
Mon Jun 23 12:21:53.514 UTC
The name for the keys will be: ioxRsa-key
Choose the size of the key modulus in the range of 512 to 4096 for your General
 Purpose Keypair. Choosing a key modulus greater than 512 may take a few
minutes.

How many bits in the modulus [2048]: yes
% A decimal number between 512 and 4096.
How many bits in the modulus [2048]:
Generating RSA keys ...

Done w/ crypto generate keypair
[OK]
```

```
RP/0/RP0/CPU0:ios#show  crypto key mypubkey rsa
Mon Jun 23 12:22:17.646 UTC
Key label: ioxRsa-key
Type     : RSA General purpose
Size     : 2048
Created  : 12:21:56 UTC Mon Jun 23 2025
Data     :
30820122 300D0609 2A864886 F70D0101 01050003 82010F00 3082010A 02820101
00DC2099 D283559A 9B38E1EB C7974230 0CFEBD41 5EB03CC1 35DB40AC 3FFC381A
1C1C5E0C 7FD6FD7F 78370B4A 9E5BA840 2CC85FB9 6DAF5CF9 96BAABA5 BFA77BC5
A41BC8F9 9AECABDB 1BD7407A 7A6B0676 8E9B1623 55BEECAD DFD1118F 2F47E4B5
4EB504D1 7B42E02E 0CF9A2C9 2CCEFCB3 21D39377 02E8789E 1CDD9290 71757DBD
E52B5B8E 6E5C5A7F 9A5DF579 3472219A 7D5C1343 F5C07F14 78574C32 101C317B
5FE45888 93776A5F 5187022A 9CE9BC69 C18E38B4 F869605B 4B512BD6 228023D8
680B1F6E E3230BC1 FB9CFC99 8AAC0B37 C4C5679D 8D17DB93 82F6BCBB 9C8E7284
45290D8C AE3F3CFA 31F2F511 5A718445 7E8ADB43 DC6D2E0E 395F9CC6 99A9B9CD
73020301 0001

Key label: the_default
Type     : RSA General purpose
Size     : 2048
Created  : 09:58:19 UTC Fri Jun 06 2025
Data     :
30820122 300D0609 2A864886 F70D0101 01050003 82010F00 3082010A 02820101
00A9B615 1F06AE38 7C843346 BEA57A9C 8557F10F 9DCC46F2 8239A386 A470232B
FE3B807F 16CA1B3C 0FCE8647 96FEB41B 16ABEF6D 246B0EA1 F5F6C7BE F52934B0
F5E88B2C 1E568833 0E4F0678 9FD302D7 B5BB17BB 0158C0A7 48F5B926 D9BBE3D7
```

```
F2B74335 D7278113 5EE0CCBA 04B20E41 B2793DE6 BC425537 D84B2197 B8FBD76B
67C03CE2 20A28E62 732FD4B5 9EE80179 045BD6E9 824EB029 766C5F64 E1D56CD2
C6884842 E6B9ADB7 B089F6E6 B5B4C0B3 244451A7 4B09692E 1563FE4C 9BE290AC
AC77F317 D3B7D5C1 DD0C8773 AF30D1C7 A9D78982 F3B52174 3B87DA23 7BA837B1
1F923C7D 1D5BC759 181F5E7B 85339C62 94CD9614 CFA130EA CC9BCAAE 106AA104
9F020301 0001
```

3. Declare a Certification Authority and configure a trustpoint.
   a) Enter the **crypto ca trustpoint** command to authenticate the trust point.
   b) Enter the **serial-number** keyword to specify whether the router serial number should be included in the certificate request.
   c) Enter the **crl optional** keyword to allow the certificates of other peers to be accepted without trying to obtain the appropriate CRL.
   d) Enter the **subject-name** keyword to specify the subject name in the certificate request.
   e) Enter the **ip-address none** keyword to prevent the inclusion of an IP address in the certificate request.
   f) Enter the **enrollmenturl** keyword, to specify the certification authority (CA) location by naming the CA URL.
   g) Enter the **rsakeypair** keyword to specify a RSA key pair for this trustpoint.

Note

When you perform a Return Merchandise Authorization (RMA) or swap of an RP card, RSA keys are not stored on the chassis or SSD card and will be removed during the process. Hence you must manually generate new RSA keys and re-establish authentication and enrollment with the CA server. Before proceeding with authentication and enrollment, ensure that you clear any certificates existing on the chassis.

Note

When you delete the trustpoint configuration, you must also clear the certificates associated with the deleted trustpoint using the command `clear crypto ca certificates <trustpoint_name>`. This step is necessary to prevent potential issues in bringing up the IKEv2 session.

Example

Near-end node:

```
RP/0/RP0/CPU0:Node-A(config)#crypto ca trustpoint trust_all_R1
            RP/0/RP0/CPU0:Node-A(config-trustp)# crl optional
            RP/0/RP0/CPU0:Node-A(config-trustp)# ip-address none
            RP/0/RP0/CPU0:Node-A(config-trustp)#subject-name
CN=Acadia.cisco.com,OU=SPBU,O=Cisco Systems,L=Bengaluru,ST=KA,C=IN
            RP/0/RP0/CPU0:Node-A(config-trustp)# serial-number none
            RP/0/RP0/CPU0:Node-A(config-trustp)# enrollment url
http://10.105.57.29:8080/scep
            RP/0/RP0/CPU0:Node-A(config-trustp)# rsakeypair ioxRsa-key
            RP/0/RP0/CPU0:Node-A(config-trustp)#commit
```

Far-end Node:

```
RP/0/RP0/CPU0:Node-B(config)#crypto ca trustpoint trust_all_R2
            RP/0/RP0/CPU0:Node-B(config-trustp)# crl optional
            RP/0/RP0/CPU0:Node-B(config-trustp)# ip-address none
            RP/0/RP0/CPU0:Node-B(config-trustp)# subject-name
CN=Acadia.cisco.com,OU=SPBU,O=Cisco Systems,L=Bengaluru,ST=KA,C=IN
            RP/0/RP0/CPU0:Node-B(config-trustp)# serial-number none
            RP/0/RP0/CPU0:Node-B(config-trustp)# enrollment url
http://10.105.57.29:8080/scep
            RP/0/RP0/CPU0:Node-B(config-trustp)# rsakeypair ioxRsa-key
            RP/0/RP0/CPU0:Node-B(config-trustp)#commit
```

4. Enter the **crypto ca authenticate ca-name** command to authenticate the CA.

   The router must authenticate the CA by obtaining the self-signed certificate of the CA, which contains the public key of the CA. Because the certificate of the CA is self-signed (the CA signs its own certificate), manually authenticate the public key of the CA by contacting the CA administrator to compare the fingerprint of the CA certificate.

   Example

```
RP/0/RP0/CPU0:ios# crypto ca authenticate trust_all_R1
Mon Jun 23 12:30:17.758 UTC
Serial Number  : 01
Subject:
CN=MICROMDM SCEP CA,OU=SCEP CA,O=scep-ca,C=US
Issued By      :
CN=MICROMDM SCEP CA,OU=SCEP CA,O=scep-ca,C=US
Validity Start : 03:39:43 UTC Wed Jan 08 2025
Validity End   : 03:39:43 UTC Mon Jan 08 2035
SHA1 Fingerprint:
853C4D0216E35AE2F765FA1F274BBD238080D06F
Do you accept this certificate? [yes/no]: yes
RP/0/RP0/CPU0:ios#
```

5. Enter the **crypto ca enroll ca-name** command to request the device certificates.

   You must obtain a signed certificate from the CA for each of your router's RSA key pairs.

   Example

```
RP/0/RP0/CPU0:ios#crypto ca enroll trust_all_R1
Mon Jun 23 12:30:32.506 UTC
% Start certificate enrollment ...
% Create a challenge password. You will need to verbally provide this
  password to the CA Administrator in order to revoke your certificate.
% For security reasons your password will not be saved in the configuration.
% Please make a note of it.

Password:
Re-enter Password:

% The subject name in the certificate will include:
CN=Acadia.cisco.com,OU=SPBU,O=Cisco Systems,L=Bengaluru,ST=KA,C=IN
% The subject name in the certificate will include: 175_ne.cisco.com
% Include the router serial number in the subject name? [yes/no]: no
% The IP address in the certificate is 0.0.0.0
    Fingerprint:  34463337 30304543 44313936 36443031
```

Note

It is crucial to ensure that the certificate is valid and not expired. Verifying its validity in advance is essential, as an expired certificate could cause traffic disruptions, particularly in the presence of RP-related issues.

Configure the parameters for IKEv2 proposal

Use this procedure to configure parameters for an IKEv2 proposal to define security negotiation between peers.

Follow these steps to configure various parameters for the IKEv2 proposal.

Procedure

1. Enter the **ikev2 proposal** command to configure an IKEv2 proposal and to specify an IKEv2 proposal name.
2. Enter the **encryption** keyword to specify the transform types for encryption.
3. Enter the **integrity** keyword to specify one or more transforms of the integrity algorithm type.
4. Enter the **prf** keyword to specify the Pseudo-Random Function (PRF) algorithm type.
5. Enter the **dh** keyword to specify the Diffie-Hellman group for the IKEv2 proposal.
6. Commit the changes.

Example

Near-end node:

```
RP/0/RP0/CPU0:Node-A(config)#ikev2 proposal ikev2_proposal_all_0_3
RP/0/RP0/CPU0:Node-A(config-ikev2-proposal-ikev2_proposal_al)# prf sha-1
RP/0/RP0/CPU0:Node-A(config-ikev2-proposal-ikev2_proposal_al)# dh-group 19
RP/0/RP0/CPU0:Node-A(config-ikev2-proposal-ikev2_proposal_al)# encryption
aes-gcm-128
RP/0/RP0/CPU0:Node-A(config-ikev2-proposal-ikev2_proposal_al)#commit
Thu Mar 7 19:20:30.916 UTC
RP/0/RP0/CPU0:Node-A(config-ikev2-proposal-proposal1)#exit
RP/0/RP0/CPU0:Node-A(config)#exit
```

Far-end node:

```
RP/0/RP0/CPU0:Node-B(config)#ikev2 proposal ikev2_proposal_all_0_0
RP/0/RP0/CPU0:Node-B(config-ikev2-proposal-ikev2_proposal_al)# prf sha-1
RP/0/RP0/CPU0:Node-B(config-ikev2-proposal-ikev2_proposal_al)# dh-group 19
RP/0/RP0/CPU0:Node-B(config-ikev2-proposal-ikev2_proposal_al)# encryption
aes-gcm-128
RP/0/RP0/CPU0:Node-B(config-ikev2-proposal-ikev2_proposal_al)#commit
```

Create an IKEv2 policy

Use this procedure to configure an IKEv2 policy to establish secure communication between two devices using specified proposals and local addresses.

Follow these steps to create an IKEv2 policy.

Procedure

1. Enter the **ikev2 policy** command, to specify an IKEv2 policy.
2. Enter the **proposal** keyword to specify the IKEv2 proposal for the IKEv2 policy.
3. Enter the **match address local** keyword to specify a match type and the IP address of the local interface to be associated with this IKEv2 profile.
4. Commit the changes.

Example

Near-end node:

```
RP/0/RP0/CPU0:Node-A(config)#ikev2 policy ikev2_policy_all_0_3
        RP/0/RP0/CPU0:Node-A(config-ikev2-policy-ikev2_policy_all_0_)# match
 address local 10.1.1.1
         RP/0/RP0/CPU0:Node-A(config-ikev2-policy-ikev2_policy_all_0_)#
proposal ikev2_proposal_all_0_3
        RP/0/RP0/CPU0:Node-A(config-ikev2-policy-ikev2_policy_all_0_)#commit
```

Far-end node:

```
RP/0/RP0/CPU0:Node-B(config)#ikev2 policy ikev2_policy_0_0
         RP/0/RP0/CPU0:Node-B(config-ikev2-policy-ikev2_policy_0_0)# match
address local 10.1.1.2
        RP/0/RP0/CPU0:Node-B(config-ikev2-policy-ikev2_policy_0_0)# proposal
 ikev2_proposal_all_0_0
         RP/0/RP0/CPU0:Node-B(config-ikev2-policy-ikev2_policy_0_0)#commit
```

Create a keyring with pre shared keys

Use this procedure to configure a keyring with pre-shared keys for secure device authentication.

Follow these steps to create a keyring with the postquantum preshared keys.

Procedure

1. Enter the **keyring** command to configure a keyring profile.
2. Enter the **peer** name keyword to specify the name of the peer interface.
3. Enter the **pre-shared-key** keyword to configure the preshared keys for authentication.
4. Enter the **address ip** keyword to specify the IP address of the peer interface along with the prefix.

Example

Near-end node:

```
RP/0/RP0/CPU0:ios#configure
Mon Dec 22 06:27:58.189 UTC
RP/0/RP0/CPU0:ios(config)#keyring KR1
RP/0/RP0/CPU0:ios(config-keyring-KR1)#peer Node-B
RP/0/RP0/CPU0:ios(config-keyring-KR1-peer-Node-B)#address 10.1.1.1
255.255.255.0
RP/0/RP0/CPU0:ios(config-keyring-KR1-peer-Node-B)#pre-shared-key password
0716127F18042E1F03035D3A533C252B093A3C1A0A15425759476C6B750426214104540A7B605B5A63014C230956022E2116236A2222260A604B5A362113443919
```

```
RP/0/RP0/CPU0:ios(config-keyring-KR1-peer-Node-B)#commit
Mon Dec 22 06:32:11.224 UTC
RP/0/RP0/CPU0:ios(config-keyring-KR1-peer-Node-B)#exit
RP/0/RP0/CPU0:ios(config-keyring-KR1)#exit
RP/0/RP0/CPU0:ios(config)#exit
RP/0/RP0/CPU0:ios#show keyring KR1
Mon Dec 22 06:32:36.860 UTC

Keyring Name                                        : KR1
===============================================================================
Total Peers                                         : 1
-------------------------------------------------------------------------------

   Peer Name                                        : Node-B
   IP Address                                       : 10.1.1.1
   Subnet Mask                                      : 255.255.255.0
   Identity                                         : Not Configured
   Local PSK                                        : Configured
   Remote PSK                                       : Configured
   PPK Mode                                         : Not Configured
   PPK Mandatory                                    : Not Configured
   Local PSK Hash (Algo:SHA256, Format:base64)     :
nT5Fw0sYJTafyOxuXUmrxlM4eOT55kD7RiWlkjJwUHU=
   Remote PSK Hash (Algo:SHA256, Format:base64)    :
nT5Fw0sYJTafyOxuXUmrxlM4eOT55kD7RiWlkjJwUHU=
   Manual PPK Hash (Algo:SHA256, Format:base64)    : Not Configured
```

Far-end node:

```
RP/0/RP0/CPU0:ios#configure
Mon Dec 22 06:27:58.189 UTC
RP/0/RP0/CPU0:ios(config)#keyring KR1
RP/0/RP0/CPU0:ios(config-keyring-KR1)#peer Node-A
RP/0/RP0/CPU0:ios(config-keyring-KR1-peer-Node-A)#address 10.1.1.2
255.255.255.0
RP/0/RP0/CPU0:ios(config-keyring-KR1-peer-Node-A)#pre-shared-key password
0716127F18042E1F03035D8A533C252B093A3C1A0A1542575947 6C6B7504262141045 40A7B605B5A63014C230956022E2116236A2222260A604B5A362113443919

RP/0/RP0/CPU0:ios(config-keyring-KR1-peer-Node-A)#commit
Mon Dec 22 06:32:11.224 UTC
RP/0/RP0/CPU0:ios(config-keyring-KR1-peer-Node-A)#exit
RP/0/RP0/CPU0:ios(config-keyring-KR1)#exit
RP/0/RP0/CPU0:ios(config)#exit
RP/0/RP0/CPU0:ios#show keyring KR1
Mon Dec 22 06:32:36.860 UTC

Keyring Name                                        : KR1
===============================================================================
Total Peers                                         : 1
-------------------------------------------------------------------------------

   Peer Name                                        : Node-A
   IP Address                                       : 10.1.1.2
   Subnet Mask                                      : 255.255.255.0
   Identity                                         : Not Configured
   Local PSK                                        : Configured
   Remote PSK                                       : Configured
   PPK Mode                                         : Not Configured
   PPK Mandatory                                    : Not Configured
   Local PSK Hash (Algo:SHA256, Format:base64)     :
nT5Fw0sYJTafyOxuXUmrxlM4eOT55kD7RiWlkjJwUHU=
   Remote PSK Hash (Algo:SHA256, Format:base64)    :
```

```
nT5Fw0sYJTafyOxuXUmrxlM4eOT55kD7RiWlkjJwUHU=
   Manual PPK Hash (Algo:SHA256, Format:base64)   : Not Configured
```

Create an IKEv2 profile that will be attached to the OTNSec profile (PSK authentication method)

Use this procedure to configure an IKEv2 profile and attach it to the OTNSec profile using a pre-shared key (PSK) authentication method.

Follow these steps to create an IKEv2 profile that will be attached to the OTNSec profile.

Procedure

1. Enter the **ikev2 profile** command to specify the name of an IKEv2 profile.
2. Enter the **lifetime** keyword to configure the lifetime of IKEv2 security association (SA).
3. Enter the **keyring** ***<keyring name>***keyword to specify the details of the IKEv2 keyring that consists of the preshared keys.
4. Enter the **match remote address** keyword to specify the IP address of the remote node.
5. Commit the changes.

Example

Near-end node:

```
RP/0/1/CPU0:Node-A(config)#ikev2 profile profile1
RP/0/1/CPU0:Node-A(config-ikev2-profile-profile1)#keyring KR1
RP/0/RP0/CPU0:Node-A(config-ikev2-profile-profile1)#lifetime 86400
RP/0/RP0/CPU0:Node-A(config-ikev2-profile-profile1)#match address 10.1.1.1
255.255.255.0
RP/0/RP0/CPU0:Node-A(config-ikev2-profile-profile1)#commit
```

Far-end node:

```
RP/0/1/CPU0:Node-B(config)#ikev2 profile profile1
RP/0/1/CPU0:Node-B(config-ikev2-profile-profile1)#keyring dynamic
RP/0/RP0/CPU0:Node-B(config-ikev2-profile-profile1)#lifetime 86400
RP/0/RP0/CPU0:Node-B(config-ikev2-profile-profile1)#match address 10.1.1.2
255.255.255.0
RP/0/RP0/CPU0:Node-B(config-ikev2-profile-profile1)#commit
```

Create an IKEv2 profile that will be attached to the OTNSec profile (CA authentication method)

Use this procedure to configure an IKEv2 profile using certificate authority (CA) authentication to be used with an OTNSec profile.

Follow these steps to create an IKEv2 profile that will be attached to the OTNSec profile.

Procedure

1. Enter the **ikev2 profile** command to specify the name of an IKEv2 profile.
2. Enter the **lifetime** keyword to configure the lifetime of IKEv2 security association (SA).
3. Enter the **match identity remote address** keyword to specify the IP address of the remote node.
4. Enter the **pki trustpoint** keyword to specify public key infrastructure name in the OTNSec profile.

5. Enter the **authentication** keyword to specify that the OTNSec Peer authentication method to be followed.
6. Enter the **local** and **remote** keywords to specify that the authentication occurs on the source router and the peer router.
7. Enter the **rsa-signature** keyword to specify that the authentication is X.509v3 certificate based on rsa signature.
8. Commit the changes.

Example

Near-end node:

```
RP/0/RP0/CPU0:Node-A(config)#ikev2 profile profile_all_0_3
RP/0/RP0/CPU0:Node-A(config-ikev2-profile-profile_all_0_3)# match fvrf vrf2
RP/0/RP0/CPU0:Node-A(config-ikev2-profile-profile_all_0_3)# match identity
remote address 10.1.1.2 255.255.255.0
RP/0/RP0/CPU0:Node-A(config-ikev2-profile-profile_all_0_3)# pki trustpoint
trust_all_R1
RP/0/RP0/CPU0:Node-A(config-ikev2-profile-profile_all_0_3)# lifetime 86400
RP/0/RP0/CPU0:Node-A(config-ikev2-profile-profile_all_0_3)# authentication
local rsa-signature
RP/0/RP0/CPU0:Node-A(config-ikev2-profile-profile_all_0_3)# authentication
remote rsa-signature
RP/0/RP0/CPU0:Node-A(config-ikev2-profile-profile_all_0_3)#commit
```

Far-end node:

```
RP/0/RP0/CPU0:Node-B(config)#ikev2 profile profile_all_0_0
RP/0/RP0/CPU0:Node-B(config-ikev2-profile-profile_all_0_0)#match fvrf vrf2
RP/0/RP0/CPU0:Node-B(config-ikev2-profile-profile_all_0_0)#match identity
remote address 10.1.1.1 255.255.255.0
RP/0/RP0/CPU0:Node-B(config-ikev2-profile-profile_all_0_0)# pki trustpoint
trust_all_R2
RP/0/RP0/CPU0:Node-B(config-ikev2-profile-profile_all_0_0)# lifetime 86400
RP/0/RP0/CPU0:Node-B(config-ikev2-profile-profile_all_0_0)# authentication
local rsa-signature
RP/0/RP0/CPU0:Node-B(config-ikev2-profile-profile_all_0_0)# authentication
remote rsa-signature
RP/0/RP0/CPU0:Node-B(config-ikev2-profile-profile_all_0_0)#
RP/0/RP0/CPU0:Node-B(config-ikev2-profile-profile_all_0_0)#commit
```

Configure the OTNSec policy

Use this procedure to configure an OTNSec policy on near-end and far-end nodes by specifying encryption and security parameters.

Follow these steps to configure the OTNSec policy in near-end and far-end nodes.

Procedure

1. Enter the **otnsec policy** command to configure an OTNSec policy.
2. Enter the **cipher-suite** keyword to specify the encryption algorithm for an OTNSec policy.
3. Enter the **security-policy must-secure** keyword to specify the security for OTNSec policy.
4. Enter the **sak-rekey-interval** keyword to configure the key lifetime for the child security associations (SA).

Note

The interval range, in seconds, is from 30 to 1209600. If SAK rekey timer is not configured, the system sets it at a default value of 898393.

5. Commit the changes.

Example

Near-end node:

```
RP/0/RP0/CPU0:Node-A(config)#otnsec policy otnsec_policy_all_0_3
RP/0/RP0/CPU0:Node-A(config-otnsec-policy)# cipher-suite AES-GCM-256
RP/0/RP0/CPU0:Node-A(config-otnsec-policy)# security-policy must-secure
RP/0/RP0/CPU0:Node-A(config-otnsec-policy)# sak-rekey-interval 28800
RP/0/RP0/CPU0:Node-A(config-otnsec-policy)#commit
```

Far-end node:

```
RP/0/RP0/CPU0:Node-B#configur
Tue Apr 29 13:48:20.494 UTC
RP/0/RP0/CPU0:Node-B(config)#otnsec policy otnsec_policy_all_0_0
RP/0/RP0/CPU0:Node-B(config-otnsec-policy)# cipher-suite AES-GCM-256
RP/0/RP0/CPU0:Node-B(config-otnsec-policy)# security-policy must-secure
RP/0/RP0/CPU0:Node-B(config-otnsec-policy)# sak-rekey-interval 28800
RP/0/RP0/CPU0:Node-B(config-otnsec-policy)#commit
```

Configure the GCC0 interface

Use this procedure to configure the GCC0 interface on both near-end and far-end nodes to establish GCC0 connectivity and assign IP addresses.

Follow these steps to configure GCC0 interface on the near-end and far-end nodes.

Procedure

1. Enter the command **CoherentDSP** *R/S/I/P* in the configuration mode, to configure the odu-flex controller.
2. Enter the **gcc0** keyword to enable the GCC0 interface.
3. Commit the changes and exit.
4. Enter the **interface gcc0** *R/S/I/P* command, to configure the GCC0 interface.
5. Enter the **ipv4 address** keyword to specify the encryption algorithm for an OTNSec policy.
6. Commit the changes.

Example

Near-end node:

```
RP/0/RP0/CPU0:Node-A(config)#controller CoherentDSP0/3/0/7
RP/0/RP0/CPU0:Node-A(config-CoDSP)# gcc0
RP/0/RP0/CPU0:Node-A(config-CoDSP)#commit
```

```
RP/0/RP0/CPU0:Node-A(config)#interface GCC00/3/0/7
RP/0/RP0/CPU0:Node-A(config-if)# ipv4 address 10.1.1.1 255.255.255.0
RP/0/RP0/CPU0:Node-A(config-if)#commit
```

Far-end node:

```
RP/0/RP0/CPU0:Node-B(config)#controller CoherentDSP0/0/0/0
RP/0/RP0/CPU0:Node-B(config-CoDSP)# gcc0
RP/0/RP0/CPU0:Node-B(config-CoDSP)#commit

RP/0/RP0/CPU0:Node-B(config)#interface GCC00/0/0/0
RP/0/RP0/CPU0:Node-B(config-if)# ipv4 address 10.1.1.2 255.255.255.0
RP/0/RP0/CPU0:Node-B(config-if)#commit
```

Configure the OTNSec on ODU flex controller

Use this procedure to configure OTNSec on ODU flex controllers at the near-end and far-end nodes to secure optical transport connections.

Follow these steps to OTNSec on the ODU flex controller on the near-end and far-end nodes.

Procedure

1. Enter the command **controller odu-flex** *R/S/I/P* to configure the ODU flex controller.
2. Enter the **otnsec** keyword to configure OTNSec.
3. Enter the **source ipv4 and destination ip4** keywords to specify the ip addresses of the local and remote nodes.
4. Enter the **session id** keyword to configure the session id for the OTNSec.

   The session ID ranges 1-65535.
5. Enter the **policy** keyword to specify the OTNSec policy that was configured.
6. Enter the **IKEv2** keyword to specify the ikev2 profile.
7. Commit the changes.

Example

Near-end node:

```
RP/0/RP0/CPU0:Node-A(config)#controller ODU-FLEX0/3/0/7/4
RP/0/RP0/CPU0:Node-A(config-oduflex)# otnsec
RP/0/RP0/CPU0:Node-A(config-otnsec)#  policy otnsec_policy_all_0_3
RP/0/RP0/CPU0:Node-A(config-otnsec)#  ikev2 profile_all_0_3
RP/0/RP0/CPU0:Node-A(config-otnsec)#  source ipv4 10.1.1.1
RP/0/RP0/CPU0:Node-A(config-otnsec)#  destination ipv4 10.1.1.2
RP/0/RP0/CPU0:Node-A(config-otnsec)#  session-id 60
RP/0/RP0/CPU0:Node-A(config-otnsec)#commit
```

Far-end node:

```
RP/0/RP0/CPU0:Node-B(config)#controller ODU-FLEX0/0/0/0/1
RP/0/RP0/CPU0:Node-B(config-oduflex)# otnsec
RP/0/RP0/CPU0:Node-B(config-otnsec)#  policy otnsec_policy_all_0_0
RP/0/RP0/CPU0:Node-B(config-otnsec)#  ikev2 profile_all_0_0
RP/0/RP0/CPU0:Node-B(config-otnsec)#  source ipv4 10.1.1.2
RP/0/RP0/CPU0:Node-B(config-otnsec)#  destination ipv4 10.1.1.1
```

```
RP/0/RP0/CPU0:Node-B(config-otnsec)#  session-id 60
RP/0/RP0/CPU0:Node-B(config-otnsec)#commit
```

Verify IKEv2 and OTNSec configurations

Use this procedure to verify the configurations and operational states of IKEv2 and OTNSec on network devices by inspecting relevant session, proposal, policy, interface, controller, and alarm information.

Follow these steps to view the various configurations done for IKEv2 and OTNSec.

Procedure

1. Enter the **show ikev2 session detail** command to view the details of IKEv2 sessions configured.

   Example

   Near-end node:

```
RP/0/RP0/CPU0:Node-A#show ikev2 session detail
Tue Apr 29 13:49:08.907 UTC

Session ID                              : 9
================================================================================

 Status                                 : UP-ACTIVE
 IKE Count                              : 1
 Child Count                            : 1
 IKE SA ID                              : 24219
--------------------------------------------------------------------------------

  Local                                 : 10.1.1.1/500
  Remote                                : 10.1.1.2/500
  Status(Description)                   : READY (Negotiation done)
  Role                                  : Initiator
  Fvrf                                  : Default
  Encryption/Keysize                    : AES-GCM/128
  PRF/Hash/DH Group                     : SHA1/None/19
  Authentication(Sign/Verify)           : RSA/RSA
  Life/Active Time(sec)                 : 86400/732
  Session ID                            : 9
  Local SPI                             : B8F3F6B99303FAEC
  Remote SPI                            : 88942BBDE8EC692C
  Local ID                              : 10.1.1.1
  Remote ID                             : 10.1.1.2
  Quantum resistance                    : Disabled

 Child SA
--------------------------------------------------------------------------------

   Local Selector                       : 10.1.1.1/60 - 10.1.1.1/60
   Remote Selector                      : 10.1.1.2/60 - 10.1.1.2/60
   ESP SPI IN/OUT                       : 0x3c01 / 0x3c01
   Encryption                           : AES-GCM
   Keysize                              : 256
   ESP HMAC                             : None
```

Far-end node:

```
RP/0/RP0/CPU0:Node-B#show ikev2 session detail
Tue Apr 29 13:52:07.885 UTC

Session ID                              : 9
================================================================================

 Status                                 : UP-ACTIVE
 IKE Count                              : 1
 Child Count                            : 1
 IKE SA ID                              : 18484
--------------------------------------------------------------------------------

  Local                                 : 10.1.1.2/500
  Remote                                : 10.1.1.1/500
  Status(Description)                   : READY (Negotiation done)
  Role                                  : Responder
  Fvrf                                  : Default
  Encryption/Keysize                    : AES-GCM/128
  PRF/Hash/DH Group                     : SHA1/None/19
  Authentication(Sign/Verify)           : RSA/RSA
  Life/Active Time(sec)                 : 86400/901
  Session ID                            : 9
  Local SPI                             : 88942BBDE8EC692C
  Remote SPI                            : B8F3F6B99303FAEC
  Local ID                              : 10.1.1.2
  Remote ID                             : 10.1.1.1
  Quantum resistance                    : Disabled

 Child SA
--------------------------------------------------------------------------------

   Local Selector                       : 10.1.1.2/60 - 10.1.1.2/60
   Remote Selector                      : 10.1.1.1/60 - 10.1.1.1/60
   ESP SPI IN/OUT                       : 0x3c01 / 0x3c01
   Encryption                           : AES-GCM
   Keysize                              : 256
   ESP HMAC                             : None
```

2. Enter the **show ikev2 proposal** command to view the details of ikev2 proposal.

Example

Near-end node:

```
RP/0/RP0/CPU0:Node-A#show ikev2 proposal
Tue Apr 29 13:49:27.918 UTC

Proposal Name              : default
==============================================================================
Status                     : Complete
------------------------------------------------------------------------------
Total Number of Enc. Alg.  : 1
   Encr. Alg.              : CBC-AES-256
------------------------------------------------------------------------------
Total Number of Hash. Alg. : 2
   Hash. Alg.              : SHA 512
   Hash. Alg.              : SHA 384
------------------------------------------------------------------------------
Total Number of PRF. Alg.  : 2
   PRF. Alg.               : SHA 512
```

```
   PRF. Alg.                : SHA 384
--------------------------------------------------------------------------------
Total Number of DH Group   : 3
   DH Group                 : Group 19
   DH Group                 : Group 20
   DH Group                 : Group 21


Proposal Name               : ikev2_proposal_all_0_3
================================================================================
Status                      : Complete
--------------------------------------------------------------------------------
Total Number of Enc. Alg.  : 1
   Encr. Alg.               : GCM-AES-128
--------------------------------------------------------------------------------
Total Number of Hash. Alg. : 0
--------------------------------------------------------------------------------
Total Number of PRF. Alg.  : 1
   PRF. Alg.                : SHA 1
--------------------------------------------------------------------------------
Total Number of DH Group   : 1
   DH Group                 : Group 19
```

Far-end node:

```
RP/0/RP0/CPU0:Node-B#show ikev2 proposal
Tue Apr 29 13:52:34.596 UTC

Proposal Name               : default
================================================================================
Status                      : Complete
--------------------------------------------------------------------------------
Total Number of Enc. Alg.  : 1
   Encr. Alg.               : CBC-AES-256
--------------------------------------------------------------------------------
Total Number of Hash. Alg. : 2
   Hash. Alg.               : SHA 512
   Hash. Alg.               : SHA 384
--------------------------------------------------------------------------------
Total Number of PRF. Alg.  : 2
   PRF. Alg.                : SHA 512
   PRF. Alg.                : SHA 384
--------------------------------------------------------------------------------
Total Number of DH Group   : 3
   DH Group                 : Group 19
   DH Group                 : Group 20
   DH Group                 : Group 21


Proposal Name               : ikev2_proposal_all_0_0
================================================================================
Status                      : Complete
--------------------------------------------------------------------------------
Total Number of Enc. Alg.  : 1
   Encr. Alg.               : GCM-AES-128
--------------------------------------------------------------------------------
Total Number of Hash. Alg. : 0
--------------------------------------------------------------------------------
Total Number of PRF. Alg.  : 1
   PRF. Alg.                : SHA 1
--------------------------------------------------------------------------------
```

```
Total Number of DH Group   : 1
   DH Group                : Group 19
```

3. Enter the **show ikev2 policy** to view the details of ikev2 policy.

Example

Near-end node:

```
RP/0/RP0/CPU0:Node-A#show ikev2 policy
Tue Apr 29 13:49:47.844 UTC

Policy Name                            : default
================================================================================
Total number of match local addr       : 1
   Match address local                 : Any
--------------------------------------------------------------------------------
Total number of proposal attached      : 1
   Proposal Name                       : default
--------------------------------------------------------------------------------
Total number of fvrf attached          : 1
   Fvrf Name                           : Any


Policy Name                            : ikev2_policy_all_0_3
================================================================================
Total number of match local addr       : 1
   Match address local                 : 10.1.1.1
--------------------------------------------------------------------------------
Total number of proposal attached      : 1
   Proposal Name                       : ikev2_proposal_all_0_3
--------------------------------------------------------------------------------
Total number of fvrf attached          : 1
   Fvrf Name                           : Default
```

Far-end node:

```
RP/0/RP0/CPU0:Node-B#show ikev2 policy
Tue Apr 29 13:53:02.395 UTC

Policy Name                            : default
================================================================================
Total number of match local addr       : 1
   Match address local                 : Any
--------------------------------------------------------------------------------
Total number of proposal attached      : 1
   Proposal Name                       : default
--------------------------------------------------------------------------------
Total number of fvrf attached          : 1
   Fvrf Name                           : Any


Policy Name                            : ikev2_policy_0_0
================================================================================
Total number of match local addr       : 1
   Match address local                 : 10.1.1.2
--------------------------------------------------------------------------------
Total number of proposal attached      : 1
   Proposal Name                       : ikev2_proposal_all_0_0
--------------------------------------------------------------------------------
```

```
Total number of fvrf attached         : 1
   Fvrf Name                          : Default
```

4. Enter the **show ip interface brief** command to view the status of the GCC interfaces.

Example

Near-end node:

```
RP/0/RP0/CPU0:Node-A#show  ipv4 interface  brief
Tue Apr 29 13:50:16.508 UTC

Interface                      IP-Address      Status          Protocol
Vrf-Name
GCC00/3/0/7                   10.1.1.1        Up              Up       default
MgmtEth0/RP0/CPU0/0           10.105.57.73    Up              Up       default
PTP0/RP0/CPU0/0               unassigned      Shutdown        Down     default
MgmtEth0/RP0/CPU0/1           unassigned      Shutdown        Down     default
PTP0/RP0/CPU0/1               unassigned      Shutdown        Down     default
```

Far-end node:

```
RP/0/RP0/CPU0:Node-B#show ipv4 in brief
Tue Apr 29 13:53:20.814 UTC

Interface                      IP-Address      Status          Protocol
Vrf-Name
GCC00/0/0/0                   10.1.1.2        Up              Up       default
MgmtEth0/RP0/CPU0/0           10.127.60.79    Up              Up       default
PTP0/RP0/CPU0/0               unassigned      Shutdown        Down     default
MgmtEth0/RP0/CPU0/1           unassigned      Shutdown        Down     default
PTP0/RP0/CPU0/1               unassigned      Shutdown        Down     default
```

5. Enter the command **show controllers odu-flex** *R/S/I/P* **otnsec** to view the OTNSec configuration on the odu-flex controller.

Example

Near-end node:

```
RP/0/RP0/CPU0:Node-A#show  controllers odu-flEX 0/3/0/7/4 otnsec
Tue Apr 29 13:50:50.360 UTC
Controller Name          : ODU-FLEX 0/3/0/7/4
Source ip                : 10.1.1.1
Destination ip           : 10.1.1.2
Session id               : 60
IKEv2 profile            : profile_all_0_3
Session State            : SECURED

Otnsec policy name       : otnsec_policy_all_0_3
  cipher-suite           : AES-GCM-256
  security-policy        : Must Secure
  sak-rekey-interval     : 28800
Time to rekey            : 28117
Time to Expire           : 1283445

Programming Status       :
  Inbound SA(Rx)         :
```

```
    AN[1]                 :
        SPI               : 0x3c01
  Outbound SA(Tx)         :
    AN[1]                 :
        SPI               : 0x3c01
```

Far-end node:

```
RP/0/RP0/CPU0:Node-B#show  controllers odu-flEX 0/0/0/0/1 otnsec
Tue Apr 29 13:53:48.933 UTC
Controller Name           : ODU-FLEX 0/0/0/0/1
Source ip                 : 10.1.1.2
Destination ip            : 10.1.1.1
Session id                : 60
IKEv2 profile             : profile_all_0_0
Session State             : SECURED

Otnsec policy name        : otnsec_policy_all_0_0
  cipher-suite            : AES-GCM-256
  security-policy         : Must Secure
  sak-rekey-interval      : 28800
Time to rekey             : 0
Time to Expire            : 1283281

Programming Status        :
  Inbound SA(Rx)          :
    AN[1]                 :
        SPI               : 0x3c01
  Outbound SA(Tx)         :
    AN[1]                 :
        SPI               : 0x3c01
```

6. Enter the command **show alarms brief system active** to view the active alarms.

Example

```
RP/0/RP0/CPU0:ios# show alarms brief system active
-----------------------------------------------------------------------
Location Severity     Group      Set time                    Description
          ----------------
0/1      NotAlarmed   Software   06/05/2025 00:04:18 UTC    ODU-FLEX0/1/0/0/1
 - OTNSec Locally Secured
```

OTNSec encryption key features

This section explains the key features of OTNSec encryption on the NCS 1014 platform.

The OTNSec encryption feature in the NCS 1014 platform includes these key characteristics:

- **Layer 1 security**: Encryption is applied at the OTN layer 1 level, specifically targeting the OPU client payload.
- **Encryption algorithm**: The system uses the Galois-Counter-Mode (GCM) AES 256-bit cipher as the default method for encrypting and decrypting OPU payloads.
- **Independent encrypted channels**: Each client operates with a separate encrypted channel for both transmission and reception.

- **Programmable key registers**: Two banks of 256-bit programmable key registers are available:
  - **Current key**: Used for ongoing encryption.
  - **Future key**: Allows for seamless key updates via software without disrupting traffic.

  Each key is associated with an **Association Number (AN[1:0])**, supporting up to four distinct numbers.
- **Interhost key exchange**: Key exchange between hosts is supported through communication over the GCC .
- **Headless mode support**: The encryption functionality remains operational even in headless mode.However, headless mode support is timebound and depends on the rekey interval.The maximum supported duration in headless mode is 14 days.

Key concepts in OTNSec encryption and key management

This section explains the attributes, behaviors, and management mechanisms of encryption keys in the OTNSec system.

These are the key concepts involved in the OTNSec encryption:

Key generation and function

The OTNSec control plane generates two different keys, one for the transmit (Tx) side and the other for the receive (Rx) side. These keys are used by the line card to program the encryptor and decryptor blocks. These blocks encrypt and decrypt the data packets between the trunk ports of the two nodes.

Key lifetime and rekeying

For security purposes, the keys have a lifetime. A key's lifetime specifies the time the key expires. The "time to expire" (SA lifetime) refers to the period during which a negotiated IKE SA remains valid. The key lifetime for the child SAs can be configured using the sak-rekey-interval which ranges from 30 seconds to 14 days. For example, if the sak-rekey-interval is configured for five minutes, a new key is generated by the OTNSec layer every five minutes. In the absence of a lifetime configuration, the default lifetime is 14.18 days. When the key reaches the maximum lifetime, it becomes invalid, and the CRYPTO-KEY-EXPIRED alarm is raised.

Volume-based rekeying

Volume-based rekeying is supported; the "time to rekey" is the interval before the SA expires, indicating when a new IKE SA must be established to ensure the connection continues without interruption.

it prevents the key from reaching the maximum lifetime. This allows the OTNSec layer to generate a new key when 70% of the lifetime (approximately11 days) of the current key is over.

Key rollover and indexing

When the lifetime of the first key expires, it automatically rolls over to the next key. To achieve a hitless rollover, the lifetimes of the keys need to be overlapped so that for a certain period of time both keys are active. To maintain this seamless switchover, a key index table is maintained. Each key pair (Tx and Rx) is associated with an Association Number (AN). The index table allows up to four numbers (0, 1, 2, and 3).

Key association and alarms

When the keys are installed, the Rx AN number of node A must match the Tx AN number of node B. Also, the Tx AN number of node A must match the Rx AN number of node B. If there is a mismatch of the AN number between the peer nodes, the CRYPTO-INDEX-MISMATCH alarm is raised.

FIPS compliance for IKEv2 sessions

This section explains how FIPS-compliant IKEv2 sessions operate, including enforcement modes, compatibility considerations, and regulatory benefits.

FIPS compliance for IKEv2 sessions is a security standard that

- requires all IKEv2 sessions to use only cryptographic algorithms and key parameters approved by FIPS
- can be enabled or disabled at the process or system level to enforce compliance, and
- ensures that only IKEv2 sessions meeting FIPS criteria are established when FIPS mode is active.

From Cisco IOS XR Software Release 25.3.1, when you enable system-wide FIPS mode using the **crypto fips-mode** command, NCS 1014 enforces FIPS compliance for all applicable processes. This improves the security and visibility for IKEv2 sessions on your device.

- When enabled, FIPS mode terminates all IKEv2sessions and allows only FIPS-compliant IKEv2 sessions to re-establish.

  When disabled, non-FIPS-compliant IKEv2 sessions can be established, while existing IKEv2 sessions remain unaffected.

However, when system wide FIPS mode is enabled, some deployments may encounter compatibility issues if other vendors or applications do not support FIPS mode.

To address these challenges, from Release 25.4.1, the `ikev2 fips-mode` command is introduced to provide a more flexible solution that restricts only IKEv2 sessions.

This selective enablement empowers organizations to achieve regulatory compliance and maintain compatibility in mixed-vendor environments.

> **Note**
>
> If you enable both IKEv2 fips-mode and global crypto fips-mode, the system sets FIPS mode one time. The most restrictive setting will have priority.

Requirement: FIPS compliance for IKEv2 sessions

This section outlines the mandatory requirements for achieving FIPS compliance in IKEv2 sessions.

To achieve FIPS compliance for IKEv2 sessions, you must adhere to these requirements.

- Use only these encryption algorithms: `aes-cbc-128`, `aes-cbc-192`, `aes-cbc-256`, `aes-gcm-128`, or `aes-gcm-256`.
- Use only these Diffie-Hellman groups: `Group 19`, `Group 20`, or `Group 21`.
- Use only these integrity or pseudo-random function algorithms: `SHA1`, `SHA256`, `SHA384`, or `SHA512`.
- For PSK and Manual Postquantum PPK authentication: Use a password with a minimum length of 14 bytes.
- For RSA authentication: Use an RSA key with a length of at least 2048 bits, and select a signing algorithm of `SHA256`, `SHA384`, or `SHA512`.

Enable FIPS mode

Use this procedure to configure your Cisco device to enable FIPS mode globally for all applicable processes.

Use this procedure to enable FIPS mode globally for all applicable processes.

Procedure

1. Enter the command **crypto fips-mode** in global configuration mode to enable FIPS mode for all applicable processes. To disable it, use the **no crypto fips-mode** command.

   Example

   ```
   RP/0/RP0/CPU0:ios# configure
   RP/0/RP0/CPU0:ios(config)# crypto fips-mode
   RP/0/RP0/CPU0:ios# commit
   ```

2. Enter the command **show ikev2 summary** to confirm that FIPS mode is active.

   Example

   ```
   RP/0/0/CPU0:ios#show ikev2 summary
   Tue Nov  4 11:54:59.027 IST

   Fips mode: ON
   -------------------------------------------------

   IKEv2 SA Summary
   -------------------------------------------------
   Total SA (Active/Negotiating)         : 0 (0/0)
   Total Outgoing SA (Active/Negotiating): 0 (0/0)
   Total Incoming SA (Active/Negotiating): 0 (0/0)
   Total QR SA (Dynamic/Manual)          : 0 (0/0)
   ```

Enable IKEv2 FIPS mode

Use this procedure to configure FIPS mode for IKEv2 sessions on your device.

Use this procedure to enforce FIPS compliance for IKEv2 sessions.

Procedure

1. Enter the command **ikev2 fips-mode** in global configuration mode to enable FIPS mode for IKEv2. To disable it, use the **no ikev2 fips-mode** command.

   Example

   ```
   RP/0/RP0/CPU0:ios# configure
   RP/0/RP0/CPU0:ios(config)# ikev2 fips-mode
   RP/0/RP0/CPU0:ios# commit
   ```

2. Enter the command **show ikev2 summary** to confirm that FIPS mode is active.

Example

```
RP/0/0/CPU0:ios#show ikev2 summary
Tue Nov  11 09:20:35.078 IST

Fips mode: ON
-------------------------------------------------

IKEv2 SA Summary
-------------------------------------------------
Total SA (Active/Negotiating)         : 0 (0/0)
Total Outgoing SA (Active/Negotiating): 0 (0/0)
Total Incoming SA (Active/Negotiating): 0 (0/0)
Total QR SA (Dynamic/Manual)          : 0 (0/0)
```

5 Performance Monitoring

Topics:

- Performance monitoring
- 7-day support for 15-Min PM bin
- Performance monitoring for NCS1K14-2.4T-X-K9 card
- Performance monitoring for NCS1K14-CCMD-16-C and NCS1K14-CCMD-16-L cards

This section explains the concept of performance monitors and how they track network health using specific metrics.

This chapter describes the procedures to configure and view the performance monitoring parameters.

Performance monitoring

This section explains how performance monitors help service providers collect, store, and assess network data for proactive operations and troubleshooting.

Table 47: Feature History

Feature Name	Release Information	Feature Description
7-day 15-minute optics PM sample history	Cisco IOS XR Release 25.4.1	This enhancement enables the collection and storage of 15-minute performance monitoring samples, retaining up to 672 samples to provide continuous data coverage for up to 7 days. Previously, the CLI bucket range was 1-32; now, it is 1-672 as highlighted in the CLI below. Updated CLI parameter: `show controllers` *`Controller-type R/S/I/P`* `pm history 15-min optics 1 bucket` **`<1-672>`** This enhancement provides comprehensive visibility into interface performance by recording 15-minute counters over a 7-day period, allowing users to effectively monitor and assess network interface health status.
Performance Monitoring Enhancements	Cisco IOS XR Release 24.4.1	You can now view historical Performance Monitoring (PM) parameters for the past 1 to 7 days for the 24-hour interval on these controllers: • CoherentDSP • Ethernet • ODU-layer This feature enhances data collection directly from the equipment, providing a comprehensive view of performance over time. Parameter added: • **bucket** *value*

Performance monitoring (PM) parameters help service providers gather and store performance data, set thresholds, and report results. This process enables early detection of network issues.

You can configure and retrieve PM counters for various controllers in 30-second, 15-minute, or 24-hour flex-bin intervals.

These parameters simplify troubleshooting operations and enhance the data collected directly from the equipment.

Note

Downgrade to 7.11.1 or earlier releases from 24.1.1 can lead to a restart of the pm_collector process. To avoid this, clear the PM historical data before the downgrade using these commands:

```
process shutdown pm_collector
                run
                cd /misc/config
                rm chkpt_pm_collector_*
                exit
```

Use these commands if you are already experiencing a continuous pm_collector restart.

```
process shutdown pm_collector
                run
                cd /misc/config
                rm chkpt_pm_collector_*
                exit
                process start pm_collector
```

Configure the PM parameters

Use this procedure to configure performance monitoring (PM) parameters for optics, Ethernet, odu-flex, and coherent DSP controllers to track and optimize network performance.

Use this task to configure the performance monitoring (PM) parameters for the optics, Ethernet, odu-flex, and coherent DSP controllers.

Follow these steps to configure PM parameters:

Procedure

Run the **show controller** *controllertype R/S/I/P* {**pm** {**current | history**}{**30-sec 15-min** | | **24-hour**}{**optics** | **ether** | **fec** | **otn | prbs| flex-bin**} **linenumber** command to configure the controllers.

Example

This sample configures the performance monitoring parameters for the optics controller at 24-hour intervals.

```
RP/0/RP0/CPU0:ios#configure
RP/0/RP0/CPU0:ios(config)#controller optics 0/0/1/5 pm 24-hour optics threshold
 osnr max
345
RP/0/RP0/CPU0:ios(config)#commit
RP/0/RP0/CPU0:RINode1#configure
Tue Feb 25 17:52:54.320 IST
RP/0/RP0/CPU0:RINode1(config)#controller och 0/5/0/8 pm 24-hour optics threshold
 opr min
-30
RP/0/RP0/CPU0:RINode1(config)#commit
```

Example

This sample configures the performance monitoring parameters for the Ethernet controller at 15-minute intervals.

```
RP/0/RP0/CPU0:chassisA164(config)#controller fourHundredGigECtrlr 0/1/0/4 pm
15-min ether
threshold rx-pkt 1
RP/0/RP0/CPU0:RINode1#configure
Tue Feb 25 17:51:18.353 IST
RP/0/RP0/CPU0:RINode1(config)#controller och 0/5/0/8 pm 15-min optics threshold
 opr min -30
RP/0/RP0/CPU0:RINode1(config)#commit
Tue Feb 25 17:52:02.504 IST
```

Example

This sample configures the performance monitoring parameters for the Coherent DSP controller at 30-second intervals.

```
RP/0/RP0/CPU0:ios#configure
RP/0/RP0/CPU0:ios(config)#controller coherentDSP 0/0/0/7 pm 30-sec fec threshold
 post-fec-ber
max OE-15
RP/0/RP0/CPU0:ios(config)#commit
RP/0/RP0/CPU0:RINode1#configur
Tue Feb 25 17:48:00.789 IST
RP/0/RP0/CPU0:RINode1(config)#controller och 0/5/0/8 ?
apply-group Apply configuration from a group
exclude-group Exclude apply-group configuration from a group
pm Configure pm parameters
rx-low-threshold Configure transponder low receive power threshold
sec-admin-state Configure the secondary admin state of och controller
shutdown Disable och controller processing
tone-detect-oob Configure tone detect oob
tone-pattern-expected Configure Tone Pattern Expected
tone-rate Configure bit rate
tx-low-threshold Configure transponder low transmit power threshold
<cr>
RP/0/RP0/CPU0:RINode1(config)#controller och 0/5/0/8 pm ?
15-min Configure pm parameters of 15 minute interval
24-hour Configure pm parameters of 24 hour interval
30-sec Configure pm parameters of 30 second interval
RP/0/RP0/CPU0:RINode1(config)#controller och 0/5/0/8 pm 30-sec ?
optics Configure och optics layer performance monitoring
RP/0/RP0/CPU0:RINode1(config)#controller och 0/5/0/8 pm 30-sec optics ?
report set och optics layer TCA reporting status
threshold Configure threshold on och optics layer parameters
RP/0/RP0/CPU0:RINode1(config)#controller och 0/5/0/8 pm 30-sec optics threshold
 ?
opr set opr threshold in dBm
opt set opt threshold in dBm
RP/0/RP0/CPU0:RINode1(config)#controller och 0/5/0/8 pm 30-sec optics threshold
 opr ?
max set opr max threshold in dBm
min set opr min threshold in dBm
RP/0/RP0/CPU0:RINode1(config)#controller och 0/5/0/8 pm 30-sec optics threshold
 opr min ?
<-5000,+6633> Enter 4 digit value ;Input value 3000 for 30.00dbm
RP/0/RP0/CPU0:RINode1(config)#controller och 0/5/0/8 pm 30-sec optics threshold
 opr min -30
```

```
RP/0/RP0/CPU0:RINode1(config)#commit
Tue Feb 25 17:50:01.632 IST
```

View the PM parameters

Use this procedure to configure and view performance monitoring (PM) parameters for Optics, Ethernet, and Coherent DSP controllers.

Use this task to view the performance monitoring parameters for Optics, Ethernet, and Coherent DSP controllers.

Follow these steps to configure the PM parameters:

Procedure

1. Run the **show controllers** *controllertype R/S/I/P* **{ pm { current | history } { 30 sec | 15-min | 24-hour } { optics | ether | fec | otn | prbs}** *linenumber*} command to display the current performance monitoring parameters of the controller with 15-minute intervals.

   Example

   This sample displays the current performance monitoring parameters of the Optics controller with 15-minute intervals.

```
RP/0/RP0/CPU0:ios#show controller optics 0/1/0/3 pm current 15-min optics 3
Fri Sep 22 13:53:37.120 IST

Optics in the current interval [13:45:00 - 13:53:37 Fri Sep 22 2023]

Optics current bucket type : Valid
             MIN       AVG       MAX      Operational      Configured
TCA   Operational      Configured     TCA
                                           Threshold(min)   Threshold(min)
(min) Threshold(max)   Threshold(max) (max)
LBC[% ]      : 56.8      56.8      56.8     0.0               NA
  NO   100.0            NA              NO
OPT[dBm]     : -40.00    -40.00    -40.00   -30.00            NA
  NO   63.32            NA              NO
OPR[dBm]     : -40.00    -40.00    -40.00   -30.00            NA
  NO   63.32            NA              NO
```

```
RP/0/RP0/CPU0:RINode1#show controllers och 0/5/0/8 pm current 15-min optics
1
Tue Feb 25 17:55:28.915 IST

Optics in the current interval [17:45:00 - 17:55:28 Tue Feb 25 2025]

Optics current bucket type : Valid
             MIN       AVG       MAX      Operational      Configured
TCA   Operational      Configured     TCA
                                           Threshold(min)   Threshold(min)
(min) Threshold(max)   Threshold(max) (max)
OPT[dBm]     : -50.00    -50.00    -50.00   -30.00            NA
  NO   15.00            NA              NO
OPR[dBm]     : -2.59     -2.59     -2.59    -28.00            NA
  NO   8.00             NA              NO

Last clearing of "show controllers OPTICS" counters never
```

Example

This sample displays the current performance monitoring parameters of the client Optics controller with 15-minute intervals.

```
RP/0/RP0/CPU0:ios#show controller optics 0/2/0/1 pm current 15-min optics 1
Fri Sep 22 13:56:52.123 IST

Optics in the current interval [13:45:00 - 13:56:52 Fri Sep 22 2023]

Optics current bucket type : Valid
             MIN       AVG       MAX      Operational      Configured
TCA   Operational      Configured     TCA
                                         Threshold(min)   Threshold(min)
(min) Threshold(max)   Threshold(max) (max)
LBC[% ]      : 24.8      25.7      26.7     0.0               NA
  NO   100.0            NA             NO
OPT[dBm]     : -0.12     -0.00     0.11     -30.00            NA
  NO   63.32            NA             NO
OPR[dBm]     : -0.67     -0.46     -0.24    -30.00            NA
  NO   63.32            NA             NO
```

Example

This sample displays the current performance monitoring parameters of the client Ethernet controller with 15-minute intervals.

```
RP/0/RP0/CPU0:ios#show controllers fourHundredGigEctrlr 0/0/0/4 pm current
15-min ether
ETHER in the current interval [16:15:00 - 16:18:44 Fri Nov 17 2023]
ETHER current bucket type : Valid
 RX-UTIL[%]                : 0.00                Threshold : 0.00
TCA(enable) : NO
 TX-UTIL[%]                : 0.00                Threshold : 0.00
TCA(enable) : NO
 RX-PKT                    : 0                   Threshold : 0
TCA(enable) : NO
 STAT-PKT                  : 0                   Threshold : 0
TCA(enable) : NO
 OCTET-STAT                : 0                   Threshold : 0
TCA(enable) : NO
 OVERSIZE-PKT              : 0                   Threshold : 0
TCA(enable) : NO
 FCS-ERR                   : 0                   Threshold : 0
TCA(enable) : NO
 LONG-FRAME                : 0                   Threshold : 0
TCA(enable) : NO
 JABBER-STATS              : 0                   Threshold : 0
TCA(enable) : NO
 64-OCTET                  : 0                   Threshold : 0
TCA(enable) : NO
 65-127-OCTET              : 0                   Threshold : 0
TCA(enable) : NO
 128-255-OCTET             : 0                   Threshold : 0
TCA(enable) : NO
 256-511-OCTET             : 0                   Threshold : 0
TCA(enable) : NO
 512-1023-OCTET            : 0                   Threshold : 0
TCA(enable) : NO
 1024-1518-OCTET           : 0                   Threshold : 0
TCA(enable) : NO
 IN-UCAST                  : 0                   Threshold : 0
```

```
TCA(enable) : NO
 IN-MCAST                  : 0                    Threshold : 0
TCA(enable) : NO
 IN-BCAST                  : 0                    Threshold : 0
TCA(enable) : NO
 OUT-UCAST                 : 0                    Threshold : 0
TCA(enable) : NO
 OUT-BCAST                 : 0                    Threshold : 0
TCA(enable) : NO
 OUT-MCAST                 : 0                    Threshold : 0
TCA(enable) : NO
 TX-PKT                    : 0                    Threshold : 0
TCA(enable) : NO
 OUT-OCTET                 : 0                    Threshold : 0
TCA(enable) : NO
 IFIN-ERRORS               : 0                    Threshold : 0
TCA(enable) : NO
 IFIN-OCTETS               : 0                    Threshold : 0
TCA(enable) : NO
 STAT-MULTICAST-PKT        : 0                    Threshold : 0
TCA(enable) : NO
 STAT-BROADCAST-PKT        : 0                    Threshold : 0
TCA(enable) : NO
 STAT-UNDERSIZED-PKT       : 0                    Threshold : 0
TCA(enable) : NO
 IN_GOOD_BYTES             : 0                    Threshold : 0
TCA(enable) : NO
 IN_GOOD_PKTS              : 0                    Threshold : 0
TCA(enable) : NO
 IN_DROP_OTHER             : 0                    Threshold : 0
TCA(enable) : NO
 OUT_GOOD_BYTES            : 0                    Threshold : 0
TCA(enable) : NO
 OUT_GOOD_PKTS             : 0                    Threshold : 0
TCA(enable) : NO
 IN_PKT_64_OCTET           : 0                    Threshold : 0
TCA(enable) : NO
 IN_PKTS_65_127_OCTETS     : 0                    Threshold : 0
TCA(enable) : NO
 IN_PKTS_128_255_OCTETS    : 0                    Threshold : 0
TCA(enable) : NO
 IN_PKTS_256_511_OCTETS    : 0                    Threshold : 0
TCA(enable) : NO
 IN_PKTS_512_1023_OCTETS   : 0                    Threshold : 0
TCA(enable) : NO
 IN_PKTS_1024_1518_OCTETS  : 0                    Threshold : 0
TCA(enable) : NO
 OUT_PKT_64_OCTET          : 0                    Threshold : 0
TCA(enable) : NO
 OUT_PKTS_65_127_OCTETS    : 0                    Threshold : 0
TCA(enable) : NO
 OUT_PKTS_128_255_OCTETS   : 0                    Threshold : 0
TCA(enable) : NO
 OUT_PKTS_256_511_OCTETS   : 0                    Threshold : 0
TCA(enable) : NO
 OUT_PKTS_512_1023_OCTETS  : 0                    Threshold : 0
TCA(enable) : NO
 OUT_PKTS_1024_1518_OCTETS : 0                    Threshold : 0
TCA(enable) : NO
 TX_UNDERSIZED_PKT         : 0                    Threshold : 0
TCA(enable) : NO
 TX_OVERSIZED_PKT          : 0                    Threshold : 0
```

```
TCA(enable) : NO
 TX_JABBER                  : 0                    Threshold : 0
TCA(enable) : NO
 TX_BAD_FCS                 : 0                    Threshold : 0
TCA(enable) : NO
```

Example

This sample displays the current performance monitoring for FEC on the Coherent DSP controller 15-minute intervals:

```
RP/0/RP0/CPU0:ios#show controller coherentDSP 0/2/0/0 pm current 15-min fec
Fri Sep 22 14:02:19.236 IST

g709 FEC in the current interval [14:00:00 - 14:02:19 Fri Sep 22 2023]

FEC current bucket type : Valid
    EC-BITS   : 545156378205            Threshold : 5400000000000
TCA(enable)  : YES
    UC-WORDS  : 0                       Threshold : 5
TCA(enable)  : YES

                                     MIN       AVG        MAX      Threshold
      TCA     Threshold     TCA
                                                                        (min)
     (enable)    (max)     (enable)
PreFEC BER                     :   5.19E-03   5.36E-03   6.09E-03      0E-15
        NO       0E-15        NO
PostFEC BER                    :     0E-15     0E-15     0E-15      0E-15
     NO       0E-15        NO
Q[dB]                          :      8.10      8.10      8.10          0.00
        NO        0.00        NO
Q_Margin[dB]                   :      2.10      2.10      2.10          0.00
        NO        0.00        NO
Instantaneous Q_Margin [dB]    :      1.70      1.77      1.80          0.00
        NO        0.00        NO
```

```
RP/0/RP0/CPU0:RINode1#show controllers oms 0/5/0/33 pm current 30-sec optics
 1
Tue Feb 25 17:56:39.462 IST

Optics in the current interval [17:56:30 - 17:56:39 Tue Feb 25 2025]

Optics current bucket type : Valid
             MIN       AVG       MAX      Operational      Configured
TCA   Operational      Configured     TCA
                                         Threshold(min)   Threshold(min)
(min) Threshold(max)   Threshold(max) (max)
OPT[dBm]     : -7.90     -7.90     -7.90    -30.00            NA
  NO   15.00            NA              NO
OPR[dBm]     : -0.60     -0.60     -0.60    -28.00            NA
  NO   8.00             NA              NO

Last clearing of "show controllers OPTICS" counters never
```

Example

This sample displays the current performance monitoring parameters for PRBS of the Coherent DSP controller with 15-minute intervals:

```
RP/0/RP0/CPU0:ios#show controllers coherentDSP 0/0/0/7 pm current 15-min prbs
Mon Feb 13 00:58:48.327 UTC
PRBS in the current interval [00:45:00 - 00:58:48 Mon Feb 13 2019]
PRBS current bucket type : Valid
EBC : 40437528165
FOUND-COUNT : 1 FOUND-AT-TS : 00:51:22 Mon Feb 13 2019
LOST-COUNT : 1 LOST-AT-TS : 00:52:52 Mon Feb 13 2019
CONFIG-PTRN : PRBS_PATTERN_PN31
Last clearing of "show controllers OTU" counters never
```

Example

This sample displays the current performance monitoring FEC parameters of the coherentDSP OTN with 15-minute intervals:

```
show controllers coherentDSP 0/0/0/7 pm current 15-min otn
Fri Nov 17 16:33:50.820 UTC
g709 OTN in the current interval [16:30:00 - 16:33:50 Fri Nov 17 2023]
OTN current bucket type : Valid
    ES-NE   : 0         Threshold : 500      TCA(enable)  : YES
    ESR-NE  : 0.00000   Threshold : 0.00000  TCA(enable)  : NO
    SES-NE  : 0         Threshold : 500      TCA(enable)  : YES
    SESR-NE : 0.00000   Threshold : 0.00000  TCA(enable)  : NO
    UAS-NE  : 0         Threshold : 500      TCA(enable)  : YES
    BBE-NE  : 0         Threshold : 10000    TCA(enable)  : YES
    BBER-NE : 0.00000   Threshold : 0.00000  TCA(enable)  : NO
    FC-NE   : 0         Threshold : 10       TCA(enable)  : YES

    ES-FE   : 0         Threshold : 500      TCA(enable)  : YES
    ESR-FE  : 0.00000   Threshold : 0.00000  TCA(enable)  : NO
    SES-FE  : 0         Threshold : 500      TCA(enable)  : YES
    SESR-FE : 0.00000   Threshold : 0.00000  TCA(enable)  : NO
    UAS-FE  : 0         Threshold : 500      TCA(enable)  : YES
    BBE-FE  : 0         Threshold : 10000    TCA(enable)  : YES
    BBER-FE : 0.00000   Threshold : 0.00000  TCA(enable)  : NO
    FC-FE   : 0         Threshold : 10       TCA(enable)  : YES
```

Example

This sample displays the current performance monitoring for OTN parameters of the ODU-Flex with 15-minute intervals:

```
RP/0/RP0/CPU0:ios#show controllers odu-flEX 0/0/0/7/4 pm current 15-min otn
pathmonitor
Fri Nov 17 16:44:34.849 UTC
g709 OTN in the current interval [16:30:00 - 16:44:34 Fri Nov 17 2023]
OTN current bucket type : Valid
    ES-NE   : 0         Threshold : 87       TCA(enable)  : YES
    ESR-NE  : 0.00000   Threshold : 0.00000  TCA(enable)  : NO
    SES-NE  : 0         Threshold : 1        TCA(enable)  : YES
    SESR-NE : 0.00000   Threshold : 0.00000  TCA(enable)  : NO
    UAS-NE  : 0         Threshold : 3        TCA(enable)  : YES
    BBE-NE  : 0         Threshold : 85040    TCA(enable)  : YES
    BBER-NE : 0.00000   Threshold : 0.00000  TCA(enable)  : NO
    FC-NE   : 0         Threshold : 10       TCA(enable)  : YES

    ES-FE   : 0         Threshold : 87       TCA(enable)  : YES
```

```
    ESR-FE  : 0.00000   Threshold : 0.00000  TCA(enable)  : NO
    SES-FE  : 0         Threshold : 1        TCA(enable)  : YES
    SESR-FE : 0.00000   Threshold : 0.00000  TCA(enable)  : NO
    UAS-FE  : 0         Threshold : 3        TCA(enable)  : YES
    BBE-FE  : 0         Threshold : 85040    TCA(enable)  : YES
    BBER-FE : 0.00000   Threshold : 0.00000  TCA(enable)  : NO
    FC-FE   : 0         Threshold : 10       TCA(enable)  : YES
```

Example

This sample displays the current performance monitoring parameters of the coherentDSP with 15-minute intervals FEC:

```
RP/0/RP0/CPU0:ios#show controllers coherentDSP 0/0/0/7 pm current 15-min fec
Fri Nov 17 16:16:05.276 UTC

g709 FEC in the current interval [16:15:00 - 16:16:05 Fri Nov 17 2023]

FEC current bucket type : Valid
    EC-BITS   : 19795040790             Threshold : 5400000000000
TCA(enable)  : YES
    UC-WORDS  : 0                       Threshold : 5
TCA(enable)  : YES

                                     MIN       AVG        MAX      Threshold
      TCA     Threshold     TCA
                                                                        (min)
     (enable)    (max)     (enable)
PreFEC BER                     :   2.70E-04   2.79E-04   2.88E-04      0E-15
        NO       0E-15        NO
PostFEC BER                    :     0E-15     0E-15     0E-15      0E-15
     NO       0E-15        NO
Q[dB]                          :     10.70     10.70     10.70          0.00
        NO        0.00        NO
Q_Margin[dB]                   :      4.40      4.45      4.50          0.00
        NO        0.00        NO
Instantaneous Q_Margin [dB]    :      4.40      4.45      4.50          0.00
        NO        0.00        NO
```

Example

This sample displays the current performance monitoring parameters of the Ethernet controller with 15-minute intervals for FEC.

```
RP/0/RP0/CPU0:ios#show controllers fourHundredGigEctrlr 0/0/0/1 pm current
15-min fec
Ethernet FEC in the current interval [11:30:00 - 11:31:00 Mon Oct 30 2023]
FEC current bucket type : Valid
    EC-WORDS  : 8406                    Threshold : 0
TCA(enable)  : NO
    UC-WORDS  : 0                       Threshold : 0
TCA(enable)  : NO
```

Example

This sample displays the current performance monitoring parameters of the trunk optics with 15-minute intervals.

```
RP/0/RP0/CPU0:ios#show controllers optics 0/0/0/7 pm current 15-min optics 1
Optics in the current interval [16:00:00 - 16:11:43 Fri Nov 17 2023]
Optics current bucket type : Valid
             MIN       AVG       MAX      Operational      Configured
```

```
TCA   Operational      Configured     TCA
                                          Threshold(min)   Threshold(min)
(min) Threshold(max)   Threshold(max) (max)
LBC[% ]      : 0.0       0.0       0.0      5.0               NA
  NO   85.0             NA              NO
OPT[dBm]     : 1.96      2.01      2.04     -12.01            NA
  NO   4.00             NA              NO
OPR[dBm]     : -0.55     -0.46     -0.35    -14.09            NA
  NO   11.00            NA              NO
CD[ps/nm]    : -1        0         0        -9700             NA
  NO   46560            NA              NO
DGD[ps ]     : 0.00      1.00      1.00     0.00              NA
  NO   81.00            NA              NO
SOPMD[ps^2]  : 2.00      24.45     93.00    0.00              NA
  NO   60000.00         NA              NO
OSNR[dB]     : 37.90     39.11     40.70    21.50             NA
  NO   99.00            NA              NO
PDL[dB]      : 1.70      1.91      2.10     0.00              NA
  NO   3.00             NA              NO
PCR[rad/s]   : 0.00      0.00      0.00     0.00              NA
  NO   2500000.00       NA              NO
RX_SIG[dBm]  : -1.07     -0.78     -0.64    -15.09            NA
  NO   3.00             NA              NO
FREQ_OFF[Mhz]: -112      -51       14       -3200             NA
  NO   3200             NA              NO
SNR[dB]      : 17.20     17.48     17.70    0.00              NA
  NO   100.00           NA              NO
SNR-X[dB]   : 17.40     17.67     18.00    0.00              NA
 NO   300.00           NA              NO
SNR-Y[dB]   : 17.00     17.31     17.60    0.00              NA
 NO   300.00           NA              NO
SOP-S1       : 0.00      0.00      0.00     -1.00             NA
  NO   1.00             NA              NO
SOP-S2       : 0.00      0.00      0.00     -1.00             NA
  NO   1.00             NA              NO
SOP-S3       : 0.00      0.00      0.00     -1.00             NA
  NO   1.00             NA              NO
```

Example

This sample displays the current performance monitoring parameters of the client optics with 15-minute intervals.

```
RP/0/RP0/CPU0:ios#show controllers optics 0/0/0/4 pm current 15-min optics 1
Fri Nov 17 16:13:38.671 UTC

Optics in the current interval [16:00:00 - 16:13:38 Fri Nov 17 2023]

Optics current bucket type : Valid
             MIN       AVG       MAX      Operational      Configured
TCA   Operational      Configured     TCA
                                          Threshold(min)   Threshold(min)
(min) Threshold(max)   Threshold(max) (max)
LBC[% ]      : 83.3      83.3      83.3     0.0               NA
  NO   100.0            NA              NO
OPT[dBm]     : 1.23      1.23      1.23     -2.01             NA
  NO   4.00             NA              NO
OPR[dBm]     : 1.19      1.21      1.24     -5.00             NA
  NO   4.00             NA              NO
```

Example

This sample displays the current performance monitoring PCS parameters of the client with 15-minute intervals.

```
RP/0/RP0/CPU0:ios#show controllers fourHundredGigEctrlr 0/0/0/4 pm current
15-min pcs
Ethernet PCS in the current interval [16:15:00 - 16:26:15 Fri Nov 17 2023]
Ethernet PCS current bucket type : Valid
 BIP[00]                    : 0                          Threshold : 0
                 TCA(enable) : NO
 BIP[01]                    : 0                          Threshold : 0
                 TCA(enable) : NO
 BIP[02]                    : 0                          Threshold : 0
                 TCA(enable) : NO
 BIP[03]                    : 0                          Threshold : 0
                 TCA(enable) : NO
 BIP[04]                    : 0                          Threshold : 0
                 TCA(enable) : NO
 BIP[05]                    : 0                          Threshold : 0
                 TCA(enable) : NO
 BIP[06]                    : 0                          Threshold : 0
                 TCA(enable) : NO
 BIP[07]                    : 0                          Threshold : 0
                 TCA(enable) : NO
 BIP[08]                    : 0                          Threshold : 0
                 TCA(enable) : NO
 BIP[09]                    : 0                          Threshold : 0
                 TCA(enable) : NO
 BIP[10]                    : 0                          Threshold : 0
                 TCA(enable) : NO
 BIP[11]                    : 0                          Threshold : 0
                 TCA(enable) : NO
 BIP[12]                    : 0                          Threshold : 0
                 TCA(enable) : NO
 BIP[13]                    : 0                          Threshold : 0
                 TCA(enable) : NO
 BIP[14]                    : 0                          Threshold : 0
                 TCA(enable) : NO
 BIP[15]                    : 0                          Threshold : 0
                 TCA(enable) : NO
 BIP[16]                    : 0                          Threshold : 0
                 TCA(enable) : NO
 BIP[17]                    : 0                          Threshold : 0
                 TCA(enable) : NO
 BIP[18]                    : 0                          Threshold : 0
                 TCA(enable) : NO
 BIP[19]                    : 0                          Threshold : 0
                 TCA(enable) : NO
 FRM-ERR[00]                : 0                          Threshold : 0
                 TCA(enable) : NO
 FRM-ERR[01]                : 0                          Threshold : 0
                 TCA(enable) : NO
 FRM-ERR[02]                : 0                          Threshold : 0
                 TCA(enable) : NO
 FRM-ERR[03]                : 0                          Threshold : 0
                 TCA(enable) : NO
 FRM-ERR[04]                : 0                          Threshold : 0
                 TCA(enable) : NO
 FRM-ERR[05]                : 0                          Threshold : 0
                 TCA(enable) : NO
 FRM-ERR[06]                : 0                          Threshold : 0
                 TCA(enable) : NO
 FRM-ERR[07]                : 0                          Threshold : 0
                 TCA(enable) : NO
```

```
FRM-ERR[08]                 : 0                          Threshold : 0
                  TCA(enable) : NO
FRM-ERR[09]                 : 0                          Threshold : 0
                  TCA(enable) : NO
FRM-ERR[10]                 : 0                          Threshold : 0
                  TCA(enable) : NO
FRM-ERR[11]                 : 0                          Threshold : 0
                  TCA(enable) : NO
FRM-ERR[12]                 : 0                          Threshold : 0
                  TCA(enable) : NO
FRM-ERR[13]                 : 0                          Threshold : 0
                  TCA(enable) : NO
FRM-ERR[14]                 : 0                          Threshold : 0
                  TCA(enable) : NO
FRM-ERR[15]                 : 0                          Threshold : 0
                  TCA(enable) : NO
FRM-ERR[16]                 : 0                          Threshold : 0
                  TCA(enable) : NO
FRM-ERR[17]                 : 0                          Threshold : 0
                  TCA(enable) : NO
FRM-ERR[18]                 : 0                          Threshold : 0
                  TCA(enable) : NO
FRM-ERR[19]                 : 0                          Threshold : 0
                  TCA(enable) : NO
BAD-SH[00]                  : 0                          Threshold : 0
                  TCA(enable) : NO
BAD-SH[01]                  : 0                          Threshold : 0
                  TCA(enable) : NO
BAD-SH[02]                  : 0                          Threshold : 0
                  TCA(enable) : NO
BAD-SH[03]                  : 0                          Threshold : 0
                  TCA(enable) : NO
BAD-SH[04]                  : 0                          Threshold : 0
                  TCA(enable) : NO
BAD-SH[05]                  : 0                          Threshold : 0
                  TCA(enable) : NO
BAD-SH[06]                  : 0                          Threshold : 0
                  TCA(enable) : NO
BAD-SH[07]                  : 0                          Threshold : 0
                  TCA(enable) : NO
BAD-SH[08]                  : 0                          Threshold : 0
                  TCA(enable) : NO
BAD-SH[09]                  : 0                          Threshold : 0
                  TCA(enable) : NO
BAD-SH[10]                  : 0                          Threshold : 0
                  TCA(enable) : NO
BAD-SH[11]                  : 0                          Threshold : 0
                  TCA(enable) : NO
BAD-SH[12]                  : 0                          Threshold : 0
                  TCA(enable) : NO
BAD-SH[13]                  : 0                          Threshold : 0
                  TCA(enable) : NO
BAD-SH[14]                  : 0                          Threshold : 0
                  TCA(enable) : NO
BAD-SH[15]                  : 0                          Threshold : 0
                  TCA(enable) : NO
BAD-SH[16]                  : 0                          Threshold : 0
                  TCA(enable) : NO
BAD-SH[17]                  : 0                          Threshold : 0
                  TCA(enable) : NO
BAD-SH[18]                  : 0                          Threshold : 0
                  TCA(enable) : NO
```

```
 BAD-SH[19]                  : 0                          Threshold : 0
                  TCA(enable) : NO
 ES                          : 0                          Threshold : 0
                  TCA(enable) : NO
 SES                         : 0                          Threshold : 0
                  TCA(enable) : NO
 UAS                         : 0                          Threshold : 0
                  TCA(enable) : NO
 ES-FE                       : 0                          Threshold : 0
                  TCA(enable) : NO
 SES-FE                      : 0                          Threshold : 0
                  TCA(enable) : NO
 UAS-FE                      : 0                          Threshold : 0
                  TCA(enable) : NO
```

Example

This sample displays the FEC performance monitoring parameters of the Ethernet controllers for various time intervals.

From Release 24.2.11, the **show controllers** command output displays post FEC BER and pre FEC BER for the Ethernet controllers of the 2.4T and 2.4TX cards.

```
RP/0/RP0/CPU0:ios#show controllers fourHundredGigEctrlr 0/1/0/4 pm current
flex-bin fec
Mon Dec 18 11:30:29.101 UTC

Ethernet FEC in the current interval [11:30:20 - 11:30:28 Mon Dec 18 2023]

Flexible bin interval size: 10 seconds

FEC current bucket type : Valid
    EC-WORDS  : 11174                   Threshold : 0
TCA(enable)  : NO
    UC-WORDS  : 0                       Threshold : 0
TCA(enable)  : NO

               MIN        AVG        MAX      Threshold   TCA       Threshold
      TCA
                                                (min)       (enable)   (max)
     (enable)
PreFEC BER:   2.8E-09     2.9E-09    3.1E-09   0E-15        NO       0E-15
         NO
PostFEC BER:  0E-15       0E-15      0E-15     0E-15        NO       0E-15
         NO
```

```
RP/0/RP0/CPU0:ios#show controllers fourHundredGigEctrlr 0/1/0/4 pm history
flex-bin fec 1
Mon Dec 18 11:48:04.229 UTC

Ethernet FEC in interval 1 [11:47:50 - 11:48:00 Mon Dec 18 2023]

Flexible bin interval size: 10 seconds

FEC history bucket type : Valid
EC-WORDS   : 12128
UC-WORDS   : 0

                MIN                         AVG                        MAX
PreFEC BER :    2.6E-09                       2.9E-09
 3.0E-09
```

```
PostFEC BER:    0E-15                          0E-15
 0E-15
```

2. Run the **show controllers** *controllertype R/S/I/P* **{ pm { current | history } { 30 sec | 15-min | 24-hour } { optics | ether | fec | otn | prbs}** *linenumber* } command to display the current performance monitoring parameters of the controller with 30-minute intervals.

Example

This sample displays the current performance monitoring of PCS of the Ethernet controller with 30-second intervals:

```
RP/0/RP0/CPU0:ios#show controllers hundredGigECtrlr 0/1/0/2/1 pm current
30-sec pcs
Fri Sep 22 14:04:33.676 IST
Ethernet PCS in the current interval [14:04:30 - 14:04:33 Fri Sep 22 2023]
Ethernet PCS current bucket type : Valid
 BIP[00]                    : 0                          Threshold : 0
                  TCA(enable) : NO
 BIP[01]                    : 0                          Threshold : 0
                  TCA(enable) : NO
 BIP[02]                    : 0                          Threshold : 0
                  TCA(enable) : NO
 BIP[03]                    : 0                          Threshold : 0
                  TCA(enable) : NO
 BIP[04]                    : 0                          Threshold : 0
                  TCA(enable) : NO
 BIP[05]                    : 0                          Threshold : 0
                  TCA(enable) : NO
 BIP[06]                    : 0                          Threshold : 0
                  TCA(enable) : NO
 BIP[07]                    : 0                          Threshold : 0
                  TCA(enable) : NO
 BIP[08]                    : 0                          Threshold : 0
                  TCA(enable) : NO
 BIP[09]                    : 0                          Threshold : 0
                  TCA(enable) : NO
 BIP[10]                    : 0                          Threshold : 0
                  TCA(enable) : NO
 BIP[11]                    : 0                          Threshold : 0
                  TCA(enable) : NO
 BIP[12]                    : 0                          Threshold : 0
                  TCA(enable) : NO
 BIP[13]                    : 0                          Threshold : 0
                  TCA(enable) : NO
 BIP[14]                    : 0                          Threshold : 0
                  TCA(enable) : NO
 BIP[15]                    : 0                          Threshold : 0
                  TCA(enable) : NO
 BIP[16]                    : 0                          Threshold : 0
                  TCA(enable) : NO
 BIP[17]                    : 0                          Threshold : 0
                  TCA(enable) : NO
 BIP[18]                    : 0                          Threshold : 0
                  TCA(enable) : NO
 BIP[19]                    : 0                          Threshold : 0
                  TCA(enable) : NO
 FRM-ERR[00]                : 0                          Threshold : 0
                  TCA(enable) : NO
 FRM-ERR[01]                : 0                          Threshold : 0
                  TCA(enable) : NO
```

```
FRM-ERR[02]                 : 0                          Threshold : 0
                  TCA(enable) : NO
FRM-ERR[03]                 : 0                          Threshold : 0
                  TCA(enable) : NO
FRM-ERR[04]                 : 0                          Threshold : 0
                  TCA(enable) : NO
FRM-ERR[05]                 : 0                          Threshold : 0
                  TCA(enable) : NO
FRM-ERR[06]                 : 0                          Threshold : 0
                  TCA(enable) : NO
FRM-ERR[07]                 : 0                          Threshold : 0
                  TCA(enable) : NO
FRM-ERR[08]                 : 0                          Threshold : 0
                  TCA(enable) : NO
FRM-ERR[09]                 : 0                          Threshold : 0
                  TCA(enable) : NO
FRM-ERR[10]                 : 0                          Threshold : 0
                  TCA(enable) : NO
FRM-ERR[11]                 : 0                          Threshold : 0
                  TCA(enable) : NO
FRM-ERR[12]                 : 0                          Threshold : 0
                  TCA(enable) : NO
FRM-ERR[13]                 : 0                          Threshold : 0
                  TCA(enable) : NO
FRM-ERR[14]                 : 0                          Threshold : 0
                  TCA(enable) : NO
FRM-ERR[15]                 : 0                          Threshold : 0
                  TCA(enable) : NO
FRM-ERR[16]                 : 0                          Threshold : 0
                  TCA(enable) : NO
FRM-ERR[17]                 : 0                          Threshold : 0
                  TCA(enable) : NO
FRM-ERR[18]                 : 0                          Threshold : 0
                  TCA(enable) : NO
FRM-ERR[19]                 : 0                          Threshold : 0
                  TCA(enable) : NO
BAD-SH[00]                  : 0                          Threshold : 0
                  TCA(enable) : NO
BAD-SH[01]                  : 0                          Threshold : 0
                  TCA(enable) : NO
BAD-SH[02]                  : 0                          Threshold : 0
                  TCA(enable) : NO
BAD-SH[03]                  : 0                          Threshold : 0
                  TCA(enable) : NO
BAD-SH[04]                  : 0                          Threshold : 0
                  TCA(enable) : NO
BAD-SH[05]                  : 0                          Threshold : 0
                  TCA(enable) : NO
BAD-SH[06]                  : 0                          Threshold : 0
                  TCA(enable) : NO
BAD-SH[07]                  : 0                          Threshold : 0
                  TCA(enable) : NO
BAD-SH[08]                  : 0                          Threshold : 0
                  TCA(enable) : NO
BAD-SH[09]                  : 0                          Threshold : 0
                  TCA(enable) : NO
BAD-SH[10]                  : 0                          Threshold : 0
                  TCA(enable) : NO
BAD-SH[11]                  : 0                          Threshold : 0
                  TCA(enable) : NO
BAD-SH[12]                  : 0                          Threshold : 0
                  TCA(enable) : NO
```

```
 BAD-SH[13]                  : 0                          Threshold : 0
                  TCA(enable) : NO
 BAD-SH[14]                  : 0                          Threshold : 0
                  TCA(enable) : NO
 BAD-SH[15]                  : 0                          Threshold : 0
                  TCA(enable) : NO
 BAD-SH[16]                  : 0                          Threshold : 0
                  TCA(enable) : NO
 BAD-SH[17]                  : 0                          Threshold : 0
                  TCA(enable) : NO
 BAD-SH[18]                  : 0                          Threshold : 0
                  TCA(enable) : NO
 BAD-SH[19]                  : 0                          Threshold : 0
                  TCA(enable) : NO
 ES                          : 0                          Threshold : 0
                  TCA(enable) : NO
 SES                         : 0                          Threshold : 0
                  TCA(enable) : NO
 UAS                         : 0                          Threshold : 0
                  TCA(enable) : NO
 ES-FE                       : 0                          Threshold : 0
                  TCA(enable) : NO
 SES-FE                      : 0                          Threshold : 0
                  TCA(enable) : NO
 UAS-FE                      : 0                          Threshold : 0
                  TCA(enable) : NO
```

Example

This sample displays the history performance monitoring of PCS of the Ethernet controller with 30-second intervals:

```
RP/0/RP0/CPU0:ios#show controllers hundredGigECtrlr 0/1/0/2/1 pm history
30-sec pcs 1
Fri Sep 22 14:06:14.193 IST
Ethernet PCS in the current interval [14:05:30 - 14:06:00 Fri Sep 22 2023]
Ethernet PCS current bucket type : Valid
 BIP[00]                     : 0
 BIP[01]                     : 0
 BIP[02]                     : 0
 BIP[03]                     : 0
 BIP[04]                     : 0
 BIP[05]                     : 0
 BIP[06]                     : 0
 BIP[07]                     : 0
 BIP[08]                     : 0
 BIP[09]                     : 0
 BIP[10]                     : 0
 BIP[11]                     : 0
 BIP[12]                     : 0
 BIP[13]                     : 0
 BIP[14]                     : 0
 BIP[15]                     : 0
 BIP[16]                     : 0
 BIP[17]                     : 0
 BIP[18]                     : 0
 BIP[19]                     : 0
 FRM-ERR[00]                 : 0
 FRM-ERR[01]                 : 0
 FRM-ERR[02]                 : 0
 FRM-ERR[03]                 : 0
 FRM-ERR[04]                 : 0
```

```
 FRM-ERR[05]                 : 0
 FRM-ERR[06]                 : 0
 FRM-ERR[07]                 : 0
 FRM-ERR[08]                 : 0
 FRM-ERR[09]                 : 0
 FRM-ERR[10]                 : 0
 FRM-ERR[11]                 : 0
 FRM-ERR[12]                 : 0
 FRM-ERR[13]                 : 0
 FRM-ERR[14]                 : 0
 FRM-ERR[15]                 : 0
 FRM-ERR[16]                 : 0
 FRM-ERR[17]                 : 0
 FRM-ERR[18]                 : 0
 FRM-ERR[19]                 : 0
 BAD-SH[00]                  : 0
 BAD-SH[01]                  : 0
 BAD-SH[02]                  : 0
 BAD-SH[03]                  : 0
 BAD-SH[04]                  : 0
 BAD-SH[05]                  : 0
 BAD-SH[06]                  : 0
 BAD-SH[07]                  : 0
 BAD-SH[08]                  : 0
 BAD-SH[09]                  : 0
 BAD-SH[10]                  : 0
 BAD-SH[11]                  : 0
 BAD-SH[12]                  : 0
 BAD-SH[13]                  : 0
 BAD-SH[14]                  : 0
 BAD-SH[15]                  : 0
 BAD-SH[16]                  : 0
 BAD-SH[17]                  : 0
 BAD-SH[18]                  : 0
 BAD-SH[19]                  : 0
 ES                          : 0
 SES                         : 0
 UAS                         : 0
 ES-FE                       : 0
 SES-FE                      : 0
 UAS-FE                      : 0
```

3. Run the **show controllers** *controllertype R/S/I/P* **{ pm { current | history } { 30 sec | 15-min | 24-hour } { optics | ether | fec | otn | prbs}** *linenumber*} command to display the current performance monitoring parameters of the controller with 10-second intervals as flexi-bin.

Example

This sample displays the current performance monitoring parameters of the trunk optics controller with 10-second intervals as flexi-bin:

```
RP/0/RP0/CPU0:ios#show controllers optics 0/1/0/0 pm current flex-bin optics
 1
Fri Sep 22 14:08:37.001 IST
Optics in the current interval [14:08:30 - 14:08:36 Fri Sep 22 2023]
Flexible bin interval size: 10 seconds
Optics current bucket type : Valid
             MIN       AVG       MAX      Operational      Configured
TCA   Operational      Configured     TCA
                                         Threshold(min)   Threshold(min)
(min) Threshold(max)   Threshold(max) (max)
```

```
LBC[% ]      : 0.0       0.0       0.0      0.0               NA
  NO   0.0               NA              NO
OPT[dBm]     : -1.53     -1.49     -1.45    0.00              NA
  NO   0.00              NA              NO
OPR[dBm]     : -1.62     -1.61     -1.57    0.00              NA
  NO   0.00              NA              NO
CD[ps/nm]    : 2         2         3        0                 NA
  NO   0                 NA              NO
DGD[ps ]     : 3.00      3.00      3.00     0.00              NA
  NO   0.00              NA              NO
SOPMD[ps^2]  : 9.00      21.57     40.00    0.00              NA
  NO   0.00              NA              NO
OSNR[dB]     : 37.90     37.90     37.90    0.00              NA
  NO   0.00              NA              NO
PDL[dB]      : 1.10      1.10      1.10     0.00              NA
  NO   0.00              NA              NO
PCR[rad/s]   : 0.00      26.29     93.00    0.00              NA
  NO   0.00              NA              NO
RX_SIG[dBm]  : -2.14     -2.09     -2.05    0.00              NA
  NO   0.00              NA              NO
FREQ_OFF[Mhz]: 873       902       938      0                 NA
  NO   0                 NA              NO
SNR[dB]      : 20.90     20.97     21.10    0.00              NA
  NO   0.00              NA              NO
SNR-AX[dB]   : 20.90     21.00     21.10    0.00              NA
  NO   0.00              NA              NO
SNR-AY[dB]   : 20.90     20.99     21.00    0.00              NA
  NO   0.00              NA              NO
SNR-BX[dB]   : 19.20     19.40     19.60    0.00              NA
  NO   0.00              NA              NO
SNR-BY[dB]   : 19.30     19.40     19.50    0.00              NA
  NO   0.00              NA              NO
SOP-S1       : 0.00      1.09      2.55     0.00              NA
  NO   0.00              NA              NO
SOP-S2       : 0.31      0.32      0.33     0.00              NA
  NO   0.00              NA              NO
SOP-S3       : 0.94      0.94      0.94     0.00              NA
  NO   0.00              NA              NO
```

Example

This sample displays the history performance monitoring parameters of the trunk optics controller with 10-second intervals as flexi-bin:

```
RP/0/RP0/CPU0:ios#show controllers optics 0/1/0/0 pm history flex-bin optics
 1 bucket 1
Fri Sep 22 14:09:54.425 IST
Optics in interval 1 [14:09:40 - 14:09:50 Fri Sep 22 2023]
Flexible bin interval size: 10 seconds
Optics history bucket type : Valid
              MIN       AVG       MAX
LBC[% ]    : 0.0       0.0       0.0
OPT[dBm]   : -1.52     -1.49     -1.47
OPR[dBm]   : -1.63     -1.59     -1.55
CD[ps/nm]  : 1         1         2
DGD[ps ]   : 2.00      2.70      3.00
SOPMD[ps^2]: 4.00      14.00     27.00
OSNR[dB]   : 37.90     37.90     37.90
PDL[dB]    : 1.10      1.10      1.10
PCR[rad/s] : 0.00      16.00     96.00
RX_SIG[dBm] : -2.13     -2.08     -2.02
```

```
FREQ_OFF[Mhz]: 833       870       916
SNR[dB]   : 20.80     20.94     21.10
SNR-AX[dB]: 20.80     20.97     21.10
SNR-AY[dB]: 20.90     20.93     21.10
SNR-BX[dB]: 19.30     19.42     19.50
SNR-BY[dB]: 19.20     19.42     19.50
SOP-S1    : 0.00      1.53      2.55
SOP-S2    : 0.30      0.32      0.33
SOP-S3    : 0.94      0.94      0.95
```

Example

This sample displays the current performance monitoring parameters of the coherentDSP controller as flexi-bin:

```
RP/0/0/CPU0:ios#show controllers coherentDSP 0/1/0/0 pm current flex-bin fec

Fri Sep 22 14:11:11.213 IST
g709 FEC in the current interval [14:11:10 - 14:11:10 Fri Sep 22 2023]
Flexible bin interval size: 10 seconds
FEC current bucket type : Valid
    EC-BITS   : 2532544513              Threshold : 0
TCA(enable)  : NO
    UC-WORDS  : 0                       Threshold : 0
TCA(enable)  : NO

                                     MIN       AVG        MAX      Threshold
      TCA     Threshold     TCA
                                                                        (min)
     (enable)    (max)     (enable)
PreFEC BER                     :   3.39E-03   3.44E-03   3.59E-03      0E-15
        NO       0E-15        NO
PostFEC BER                    :     0E-15     0E-15     0E-15      0E-15
     NO       0E-15        NO
Q[dB]                          :      8.60      8.60      8.60          0.00
        NO        0.00        NO
Q_Margin[dB]                   :      2.60      2.60      2.60          0.00
        NO        0.00        NO
Instantaneous Q_Margin [dB]    :      2.30      2.30      2.30          0.00
        NO        0.00        NO
```

4. Run the **show controllers** *controllertype R/S/I/P* **{ pm { current | history } { 30 sec | 15-min | 24-hour } { optics | ether | fec | otn | prbs}** *linenumber* } command to display the current performance monitoring FEC parameters of the coherentDSP OTN.

Example

This sample displays the current performance monitoring FEC parameters of the coherentDSP OTN with 15-minute intervals:

```
show controllers coherentDSP 0/0/0/7 pm current 15-min otn
Fri Nov 17 16:33:50.820 UTC
g709 OTN in the current interval [16:30:00 - 16:33:50 Fri Nov 17 2023]
OTN current bucket type : Valid
    ES-NE   : 0         Threshold : 500      TCA(enable)  : YES
    ESR-NE  : 0.00000   Threshold : 0.00000  TCA(enable)  : NO
    SES-NE  : 0         Threshold : 500      TCA(enable)  : YES
    SESR-NE : 0.00000   Threshold : 0.00000  TCA(enable)  : NO
    UAS-NE  : 0         Threshold : 500      TCA(enable)  : YES
    BBE-NE  : 0         Threshold : 10000    TCA(enable)  : YES
    BBER-NE : 0.00000   Threshold : 0.00000  TCA(enable)  : NO
```

```
    FC-NE   : 0         Threshold : 10       TCA(enable)  : YES

    ES-FE   : 0         Threshold : 500      TCA(enable)  : YES
    ESR-FE  : 0.00000   Threshold : 0.00000  TCA(enable)  : NO
    SES-FE  : 0         Threshold : 500      TCA(enable)  : YES
    SESR-FE : 0.00000   Threshold : 0.00000  TCA(enable)  : NO
    UAS-FE  : 0         Threshold : 500      TCA(enable)  : YES
    BBE-FE  : 0         Threshold : 10000    TCA(enable)  : YES
    BBER-FE : 0.00000   Threshold : 0.00000  TCA(enable)  : NO
    FC-FE   : 0         Threshold : 10       TCA(enable)  : YES
```

Example

This sample displays the current performance monitoring for OTN parameters of the ODU-Flex with 15-minute intervals:

```
RP/0/RP0/CPU0:ios#show controllers odu-flEX 0/0/0/7/4 pm current 15-min otn
pathmonitor
Fri Nov 17 16:44:34.849 UTC
g709 OTN in the current interval [16:30:00 - 16:44:34 Fri Nov 17 2023]
OTN current bucket type : Valid
    ES-NE   : 0         Threshold : 87       TCA(enable)  : YES
    ESR-NE  : 0.00000   Threshold : 0.00000  TCA(enable)  : NO
    SES-NE  : 0         Threshold : 1        TCA(enable)  : YES
    SESR-NE : 0.00000   Threshold : 0.00000  TCA(enable)  : NO
    UAS-NE  : 0         Threshold : 3        TCA(enable)  : YES
    BBE-NE  : 0         Threshold : 85040    TCA(enable)  : YES
    BBER-NE : 0.00000   Threshold : 0.00000  TCA(enable)  : NO
    FC-NE   : 0         Threshold : 10       TCA(enable)  : YES

    ES-FE   : 0         Threshold : 87       TCA(enable)  : YES
    ESR-FE  : 0.00000   Threshold : 0.00000  TCA(enable)  : NO
    SES-FE  : 0         Threshold : 1        TCA(enable)  : YES
    SESR-FE : 0.00000   Threshold : 0.00000  TCA(enable)  : NO
    UAS-FE  : 0         Threshold : 3        TCA(enable)  : YES
    BBE-FE  : 0         Threshold : 85040    TCA(enable)  : YES
    BBER-FE : 0.00000   Threshold : 0.00000  TCA(enable)  : NO
    FC-FE   : 0         Threshold : 10       TCA(enable)  : YES
```

Clear the PM parameters

Use this procedure to clear performance monitoring parameters on Ethernet and CoherentDSP controllers.

Procedure

Run the **clear controller** *controllertype R/S/I/P* **pm** command to clear performance monitoring parameters for Ethernet and CoherentDSP controllers.

Example

This sample shows how to clear the PM parameters on the CoherentDSP controller.

```
RP/0/RP0/CPU0:ios#show controller coherentDSP 0/0/0/0 pm current 15-min fec
Fri Sep 22 14:28:12.100 IST
g709 FEC in the current interval [14:15:00 - 14:28:12 Fri Sep 22 2023]
FEC current bucket type : Valid
```

```
Configuration Guide for Cisco NCS 1014, IOS XR Releases 25.x.x
212
Configure NCS 1014 Transponder Cards
Configuring PM Parameters
EC-BITS : 1159814176244 Threshold : 5400000000000 TCA(enable) :
YES
UC-WORDS : 0 Threshold : 5 TCA(enable) :
YES
MIN AVG MAX Threshold TCA
Threshold TCA
(min) (enable)
(max) (enable)
PreFEC BER : 0E-15 2.14E-03 2.28E-02 0E-15 NO
0E-15 NO
PostFEC BER : 0E-15 1.37E-10 6.59E-08 0E-15 NO
0E-15 NO
Q[dB] : 0.00 4.14 8.60 0.00 NO
0.00 NO
Q_Margin[dB] : -6.00 -1.89 2.60 0.00 NO
0.00 NO
Instantaneous Q_Margin [dB] : -21474836.48 -28144.25 2.30 0.00
NO 0.00 NO
Last clearing of "show controllers OTU" counters never

RP/0/RP0/CPU0:ios#clear controller coherentDSP 0/0/0/0 pm
Mon Jun 10 11:44:31.650 UTC
RP/0/RP0/CPU0:ios#show controller coherentDSP 0/0/0/0 pm current 15-min fec
Fri Sep 22 14:30:06.833 IST
g709 FEC in the current interval [14:30:00 - 14:30:06 Fri Sep 22 2023]
FEC current bucket type : Valid
EC-BITS : 17889249955 Threshold : 5400000000000 TCA(enable) :
YES
UC-WORDS : 0 Threshold : 5 TCA(enable) :
YES
MIN AVG MAX Threshold TCA
Threshold TCA
(min) (enable)
(max) (enable)
PreFEC BER : 3.38E-03 3.49E-03 3.85E-03 0E-15 NO
0E-15 NO
PostFEC BER : 0E-15 0E-15 0E-15 0E-15 NO
0E-15 NO
Q[dB] : 8.60 8.60 8.60 0.00 NO
0.00 NO
Q_Margin[dB] : 2.50 2.50 2.60 0.00 NO
0.00 NO
Instantaneous Q_Margin [dB] : 2.20 2.20 2.20 0.00 NO
0.00 NO
Last clearing of "show controllers OTU" counters 00:00:07
```

Example

This sample shows how to clear the PM parameters on the Ethernet controller.

```
RP/0/RP0/CPU0:ios#clear controller HundredGigECtrlr 0/0/0/2/1 pm
```

PM history persistence

This section explains how performance monitoring (PM) history parameters are retained after device reloads or upgrades, and under what conditions PM data remains persistent or may be lost.

PM history parameters for Optics, Ethernet, and coherent DSP controllers are retained even after a line card cold reload, line card warm reload, XR reload, Calvados reload, RP reload, Hw-module all reload, power cycle, or upgrade of the NCS 1014 chassis.

After a software upgrade to the latest release, you can view the history performance monitoring parameters from the previous release. The PM history persistence is supported for 30-second, 15-minute, and 24-hour bucket types.

However, this list describes the time required to fill all historical buckets for each bucket type. After the buckets are full, no errors appear when you fetch PM historical data.

- For 30-second bucket type, 15 minutes is required to fill 30 historical buckets.
- For 15-minute bucket type, 8 hours is required to fill 32 historical buckets.
- For 24-hour bucket type, 24 hours are required to fill 7 historical bucket.

PM counters are updated continuously in the current bucket for all bucket types: flex, 30-second, 15-minute, and 24-hour. When the timer expires for a bucket type, the current PM data moves to the historical PM bucket. This process is called rollover. After rollover, the current PM data becomes available as historical PM data.

If the controller is deleted or removed, PM data remains persistent for three hours. If the controller does not return within three hours, the PM data is cleared because the controller is considered no longer in use.

Limitations of PM history persistence

If the NCS 1014 reloads during the rollover period, one of these scenarios occurs:

- A complete PM bucket may be missing, and the system marks the next PM bucket as Invalid.
- PM bucket expiry message appears as follows:

```
RP/0/RP0/CPU0:ios#show controllers hundredGigECtrlr 0/3/0/2/2 pm history
30-sec ether 29
Fri Apr  1 01:32:20.646 UTC
History data is empty, Verify at least one collection period is expired
```

- PM bucket interval is marked as Invalid and counters are updated as zero.
- PM bucket interval is marked as Invalid and counters are updated as nonzero.

Instantaneous Q-Margin

This section provides key scenarios where instantaneous Q-margin values in PM buckets may be invalid and explains how to interpret these readings for reliable monitoring.

Scenarios on Instantaneous Q-margin

In these scenarios, the initial few PM buckets are displayed as valid although the instantaneous Q-margin values are displayed as invalid in those buckets. The PM is performed for 30 sec, 15 mins, and 24 hours, respectively.

Scenarios where this issue occurs include:

- Shutdown or enable optics
- Trunk rate change
- Fiber cuts

To address these situations, avoid considering the initial PM bucket readings when monitoring the instantaneous Q-margin values for these scenarios.

This sample shows that, in certain scenarios, the initial PM bucket readings are invalid. Later, the PM bucket readings become valid, even when the instantaneous Q-margin value remains invalid.

```
RP/0/RP0/CPU0:ios#show controllers coherentDSP 0/2/0/0 pm history flex-bin fec
 1
Fri Sep 22 14:17:01.008 IST
g709 FEC in interval 1 [14:16:50 - 14:17:00 Fri Sep 22 2023]
Flexible bin interval size: 10 seconds
FEC history bucket type : Valid
 EC-BITS   : 25615718133              UC-WORDS  : 0
                                MIN                          AVG
         MAX
PreFEC BER              :    3.37E-03                    3.49E-03
      3.90E-03
PostFEC BER             :    0E-15                       0E-15
      0E-15
Q                       :    8.60                        8.60
      8.60
Q_margin                :    2.50                        2.56
      2.60
Instantaneous Q_margin  :    2.20                        2.20
      2.20
```

Now, the PM buckets are valid although the instantaneous Q-margin value is invalid.

```
RP/0/RP0/CPU0:ios#show controllers coherentDSP 0/2/0/0 pm history 30-sec fec
1
Sep 22 08:52:03.750 UTC
g709 FEC in interval 1 [08:51:50 - 08:52:00 Fri Sep 22 2023]
FEC history bucket type : Invlid
 EC-BITS   : 35072302421                   UC-WORDS  : 0

                                MIN                          AVG
        MAX
PreFEC BER              :    5.20E-03                    5.30E-03
      5.64E-03
PostFEC BER             :    0E-15                       0E-15
      0E-15
Q                       :    8.10                        8.10
      8.10
Q_margin                :    2.10                        2.10
      2.10
Instantaneous Q_margin  :    1.80                        1.80
      1.80
```

View Ethernet statistics

Use this procedure to configure and verify Ethernet controller performance monitoring statistics using the CLI.

You can access and view the Performance Monitoring statistics for the Ethernet controllers.

Procedure

Run the **show controller** *controllertype R/S/I/P* **pm** command to view the performance monitoring statistics for the Ethernet controllers.

Example

```
RP/0/RP0/CPU0:ios#show controllers fourHundredGigEctrlr 0/0/0/4 stats
Fri Nov 17 16:28:34.138 UTC
Statistics for interface FourHundredGigECtrlr0/0/0/4 (cached values):
Ingress:
    Input total bytes           = 0                      Valid = False
 Start time = 13:12:29 Fri Nov 17 2023
    Input good bytes            = 0                      Valid = False
 Start time = 13:12:29 Fri Nov 17 2023
    Input total packets         = 0                      Valid = False
 Start time = 13:12:29 Fri Nov 17 2023
    Input 802.1Q frames         = 0                      Valid = False
 Start time = 13:12:29 Fri Nov 17 2023
    Input pause frames          = 0                      Valid = False
 Start time = 13:12:29 Fri Nov 17 2023
    Input pkts 64 bytes         = 0                      Valid = False
 Start time = 13:12:29 Fri Nov 17 2023
    Input pkts 65-127 bytes     = 0                      Valid = False
 Start time = 13:12:29 Fri Nov 17 2023
    Input pkts 128-255 bytes    = 0                      Valid = False
 Start time = 13:12:29 Fri Nov 17 2023
    Input pkts 256-511 bytes    = 0                      Valid = False
 Start time = 13:12:29 Fri Nov 17 2023
    Input pkts 512-1023 bytes   = 0                      Valid = False
 Start time = 13:12:29 Fri Nov 17 2023
    Input pkts 1024-1518 bytes  = 0                      Valid = False
 Start time = 13:12:29 Fri Nov 17 2023
    Input pkts 1519-Max bytes   = 0                      Valid = False
 Start time = 13:12:29 Fri Nov 17 2023
    Input good pkts             = 0                      Valid = False
 Start time = 13:12:29 Fri Nov 17 2023
    Input unicast pkts          = 0                      Valid = False
 Start time = 13:12:29 Fri Nov 17 2023
    Input multicast pkts        = 0                      Valid = False
 Start time = 13:12:29 Fri Nov 17 2023
    Input broadcast pkts        = 0                      Valid = False
 Start time = 13:12:29 Fri Nov 17 2023
    Input drop overrun          = 0                      Valid = False
 Start time = 13:12:29 Fri Nov 17 2023
    Input drop abort            = 0                      Valid = False
 Start time = 13:12:29 Fri Nov 17 2023
    Input drop invalid VLAN     = 0                      Valid = False
 Start time = 13:12:29 Fri Nov 17 2023
    Input drop invalid DMAC     = 0                      Valid = False
 Start time = 13:12:29 Fri Nov 17 2023
    Input drop invalid encap    = 0                      Valid = False
 Start time = 13:12:29 Fri Nov 17 2023
    Input drop other            = 0                      Valid = False
 Start time = 13:12:29 Fri Nov 17 2023
    Input error giant           = 0                      Valid = False
 Start time = 13:12:29 Fri Nov 17 2023
    Input error runt            = 0                      Valid = False
 Start time = 13:12:29 Fri Nov 17 2023
    Input error jabbers         = 0                      Valid = False
 Start time = 13:12:29 Fri Nov 17 2023
```

```
    Input error fragments       = 0                       Valid = False
 Start time = 13:12:29 Fri Nov 17 2023
    Input error CRC             = 0                       Valid = False
 Start time = 13:12:29 Fri Nov 17 2023
    Input error collisions      = 0                       Valid = False
 Start time = 13:12:29 Fri Nov 17 2023
    Input error symbol          = 0                       Valid = False
 Start time = 13:12:29 Fri Nov 17 2023
    Input error other           = 0                       Valid = False
 Start time = 13:12:29 Fri Nov 17 2023
    Input MIB giant             = 0                       Valid = False
 Start time = 13:12:29 Fri Nov 17 2023
    Input MIB jabber            = 0                       Valid = False
 Start time = 13:12:29 Fri Nov 17 2023
    Input MIB CRC               = 0                       Valid = False
 Start time = 13:12:29 Fri Nov 17 2023
Egress:
    Output total bytes          = 0                       Valid = False
 Start time = 13:12:29 Fri Nov 17 2023
    Output good bytes           = 0                       Valid = False
 Start time = 13:12:29 Fri Nov 17 2023
    Output total packets        = 0                       Valid = False
 Start time = 13:12:29 Fri Nov 17 2023
    Output 802.1Q frames        = 0                       Valid = False
 Start time = 13:12:29 Fri Nov 17 2023
    Output pause frames         = 0                       Valid = False
 Start time = 13:12:29 Fri Nov 17 2023
    Output pkts 64 bytes        = 0                       Valid = False
 Start time = 13:12:29 Fri Nov 17 2023
    Output pkts 65-127 bytes    = 0                       Valid = False
 Start time = 13:12:29 Fri Nov 17 2023
    Output pkts 128-255 bytes   = 0                       Valid = False
 Start time = 13:12:29 Fri Nov 17 2023
    Output pkts 256-511 bytes   = 0                       Valid = False
 Start time = 13:12:29 Fri Nov 17 2023
    Output pkts 512-1023 bytes  = 0                       Valid = False
 Start time = 13:12:29 Fri Nov 17 2023
    Output pkts 1024-1518 bytes = 0                       Valid = False
 Start time = 13:12:29 Fri Nov 17 2023
    Output pkts 1519-Max bytes  = 0                       Valid = False
 Start time = 13:12:29 Fri Nov 17 2023
    Output good pkts            = 0                       Valid = False
 Start time = 13:12:29 Fri Nov 17 2023
    Output unicast pkts         = 0                       Valid = False
 Start time = 13:12:29 Fri Nov 17 2023
    Output multicast pkts       = 0                       Valid = False
 Start time = 13:12:29 Fri Nov 17 2023
    Output broadcast pkts       = 0                       Valid = False
 Start time = 13:12:29 Fri Nov 17 2023
    Output drop underrun        = 0                       Valid = False
 Start time = 13:12:29 Fri Nov 17 2023
    Output drop abort           = 0                       Valid = False
 Start time = 13:12:29 Fri Nov 17 2023
    Output drop other           = 0                       Valid = False
 Start time = 13:12:29 Fri Nov 17 2023
    Output error other          = 0                       Valid = False
 Start time = 13:12:29 Fri Nov 17 2023
```

Note

Performance monitoring statistics are not supported for the input unicast packets, output unicast packets, and input error fragments counters for Ethernet clients.

7-day support for 15-Min PM bin

This section explains how extended 7-day support for 15-minute performance monitoring samples provides continuous network interface visibility and assessment

PM is enhanced for controllers to collect 15-min bin for 7 days extension.

Table 48: Feature History

Feature Name	Release Information	Feature Description
7-day 15-minute optics PM history	Cisco IOS XR Release 25.4.1	This enhancement enables the collection and storage of 15-minute performance monitoring samples, collecting up to 672 samples. Previously, the CLI bucket range was 1-32; now, it is increased to 1-672 as highlighted in the CLI command. **Updated CLI command parameter:** `show controllers Controller-type R/S/I/P pm history 15-min optics 1 bucket <1-672>` **New CLI command introduced:** `performance-mgmt controller 15-min extend days <0-7>` , where 0 stands for 8 hours. This enhancement provides comprehensive visibility into interface performance by recording 15-minute counters over a 7-day period. This allows users to effectively monitor and assess network interface health status.

The collection behavior depends on the controller Product ID (PID):

- For NCS1010-CTR2-B-K9, NCS1010-CTLR-B-K9, NCS1K14-CNTLR-B-K9, and NCS1K14-CNT-B-K9 controllers, the node automatically collects 672 samples (corresponding to 7 days of data).
- For NCS1010-CNTLR-K9, NCS1K14-CNTLR-K9, NCS1010-CTR2-K9 controllers, 32 samples are collected by default. To capture 672 samples, explicit configuration is required.

Note

While troubleshooting, showtech can only collect 32 samples, and not the complete 672 samples, regardless of the configured sample collection.

Configure 7-day 15-minute performance monitoring sample collection

Use this procedure to configure the controller to collect and retain up to 672 15-minute performance monitoring samples over a 7-day period.

Ensure the controller can store extended 15-minute performance monitoring samples for enhanced analysis and troubleshooting.

Follow these steps to extend sample collection beyond 32 samples.

Procedure

1. Enter global configuration mode.

   Example

   ```
   RP/0/RP0/CPU0:ios#configure
   ```

2. Run the **performance-mgmt controller 15-min extend days** command to configure the number of days for 15-minute performance monitoring sample collection.

   You can specify 0 for 8 hours of retention, or a number from 1 to 7 for the corresponding number of days.

   Example

   ```
   RP/0/RP0/CPU0:ios(config)#performance-mgmt controller 15-min extend days 7
   ```

3. Commit and exit the configuration mode.

   Example

   ```
   RP/0/RP0/CPU0:ios(config)#commit
   RP/0/RP0/CPU0:ios(config)#end
   ```

4. Run the **show controllers ots <interface> pm history 15-min optics 1 bucket extend day <0-7>** command to verify the configured sample collection.

   The output should reflect the extended bucket range (for example, 1-672).

The controller is now configured to retain 15-minute performance monitoring samples for the specified duration (for example, up to 7 days or 672 samples).

Performance monitoring for NCS1K14-2.4T-X-K9 card

This section explains how performance monitoring parameters are used to gather, store, and report performance data for the NCS1K14-2.4T-X-K9 card.

Service providers use performance monitoring (PM) parameters to gather performance data, store it, set thresholds, and report it. This helps with early detection of network issues.

You can configure and retrieve PM counters at intervals of 30 seconds, 15 minutes, or 24 hours. These parameters simplify troubleshooting operations and increase the amount of data that can be collected directly from the equipment.

Performance monitoring for NCS1K14-CCMD-16-C and NCS1K14-CCMD-16-L cards

This section explains how performance monitors operate on NCS1K14-CCMD-16-C and NCS1K14-CCMD-16-L line cards, enabling service providers to gather, report, and optimize key optical performance parameters.

Table 49: Feature History

Feature Name	Release Information	Feature Description
Supported Functionalities of CCMD-16-C and CCMD-16-L Line Cards	Cisco IOS XR Release 7.11.1	Supported Functionalities of CCMD-16-C and CCMD-16-L Line Cards: The software supports Variable Optical Attenuator (VoA), power monitoring and reporting of parameters to the controllers at the OCH and OMS level. It helps in configuring the amplifier parameters for optimizing signal transmissions. The software also supports in-band and out-of-band tone detection and monitoring and reporting of alarms.

Service providers use performance monitoring (PM) parameters to gather and store data, set thresholds, and report performance information for early detection of network issues.

You can configure and retrieve PM counters for the OCH and OMS controllers in 30-second, 15-minute, or 24-hour intervals, or in a flexible 10-second bin interval. These parameters simplify troubleshooting and enhance the value of data collected directly from the equipment.

PM parameters supported on OMS controller

These are the PM parameters supported on the OMS controller:

Table 50: PM parameters supported on OMS controller

Controller	Supported PM parameters	Description

OMS	OPT (dBm)	Transmitted power
	OPR (dBm)	Received Power
	OPBR (dBm)	Back Reflection Power
	OPBRR (dB)	Back Reflection Ratio
	EAGN (dB)	Egress Ampli Gain
	EATL (dB)	Egress Ampli Tilt
	IAGN (dB)	Ingress Ampli Gain
	IATL (dB)	Ingress Ampli Tilt

PM parameters supported on OCH controller

These are the PM parameters supported on the OCH controller:

Controller	Supported PM parameters	Description
OCH	OPT (dBm)	Transmitted Power
	OPR (dBm)	Received Power

Configure PM parameters for NCS1K14-CCMD-16-C and NCS1K14-CCMD-16-L cards

Use this procedure to configure minimum and maximum thresholds for performance monitoring parameters and enable threshold crossing alarms for OMS and OCH controllers.

Follow these steps to configure the minimum and maximum thresholds for individual parameters.

Procedure

1. Run the **controller** *controllertype R/S/I/P* **pm** {**30-sec** | **15-min** | **24-hour**} **optics threshold** {**parameter-name**} {**max**|**min**} {**value**} command to configure minimum and maximum thresholds for individual performance monitoring parameters.

   Example

   This sample displays the performance monitoring parameters of the OMS controller.

```
RP/0/RP0/CPU0:ios#configure
RP/0/RP0/CPU0:(config)#controller oms 0/1/0/0 pm 30-sec optics threshold opt
 min < value >
RP/0/RP0/CPU0:ios(config)#commit
```

   This sample displays the performance monitoring parameters of the OCH controller.

```
RP/0/RP0/CPU0:ios#configure
RP/0/RP0/CPU0:(config)#controller och 0/1/0/1 pm 30-sec optics threshold opt
 min < value >
RP/0/RP0/CPU0:ios(config)#commit
```

2. Run the **controller** *controllertype R/S/I/P* **pm** {**30-sec** | **15-min** | **24-hour**} **optics report** { **parameter-name**} {**min-tca**|**max-tca**} command to enable reporting of threshold crossing alarms for individual parameters.
3. Run the **commit** command to save the changes.

View PM parameters for NCS1K14-CCMD-16-C and NCS1K14-CCMD-16-L cards

Use this procedure to view performance monitoring (PM) parameters for OMS and OCH controllers on NCS1K14-CCMD-16-C and NCS1K14-CCMD-16-L cards.

Use this task to view the performance monitoring parameters for OMS and OCH controllers.

Procedure

1. Run the **show controllers** *controllertype R/S/I/P* **pm { current | history } { 30 sec | 15-min | 24-hour | flex-bin } optics** { *linenumber* } **bucket***value* command to view PM parameters for the OMS and OCH controllers.

   Example

   This is a sample to view the PM parameters of the OMS controller.

```
RP/0/RP0/CPU0:ios_P2A_DT_03#show controllers oms 0/1/0/0 pm current 30-sec
optics 1
Optics in the current interval [15:02:30 - 15:02:36 Mon Nov 20 2023]
Optics current bucket type : Valid
            MIN       AVG       MAX      Operational      Configured
TCA   Operational      Configured     TCA
                                          Threshold(min)   Threshold(min)
(min) Threshold(max)   Threshold(max) (max)
OPT[dBm]     : -8.30     -8.24     -8.20    -50.00            NA
  NO   30.00            NA              NO
OPR[dBm]     : -1.80     -1.76     -1.60    -50.00            NA
  NO   30.00            NA              NO
OPBR[dBm]     : -11.61    -11.61    -11.61   -50.00            NA
   NO   -10.00           NA              NO
OPBRR[dB]     : -3.30     -3.30     -3.30    -50.00            NA
   NO   0.00             NA              NO
EAGN[dB]      : 2.00      2.00      2.00     -3.00             NA
   NO   22.00            NA              NO
EATL[dB]      : 0.00      0.00      0.00     -6.50             NA
   NO   6.50             NA              NO
IAGN[dB]      : 5.00      5.00      5.00     0.00              NA
   NO   10.00            NA              NO
IATL[dB]      : 0.00      0.00      0.00     -6.50             NA
   NO   6.50             NA              NO
Last clearing of "show controllers OPTICS" counters never
```

   This is a sample to view the PM parameters of the OCH controller.

```
RP/0/RP0/CPU0:ios_P2A_DT_03#show controllers och 0/1/0/2 pm current 30-sec
optics 1
Optics in the current interval [15:04:30 - 15:04:39 Mon Nov 20 2023]
Optics current bucket type : Valid
MIN AVG MAX Operational Configured TCA Operational Configured TCA
Threshold(min) Threshold(min) (min) Threshold(max) Threshold(max) (max)
```

```
OPT[dBm] : -1.40 -1.36 -1.30 -50.00 NA NO 30.00 NA NO
OPR[dBm] : -5.80 -5.71 -5.70 -50.00 NA NO 30.00 NA NO
```

```
RP/0/RP0/CPU0:ios_P2A_DT_03#show controllers och 0/1/0/2 pm current 15-min
optics 1
Optics in the current interval [15:00:00 - 15:05:03 Mon Nov 20 2023]
Optics current bucket type : Valid
MIN AVG MAX Operational Configured TCA Operational Configured TCA
Threshold(min) Threshold(min) (min) Threshold(max) Threshold(max) (max)
OPT[dBm] : -1.80 -1.50 -1.30 -50.00 NA NO 30.00 NA NO
OPR[dBm] : -5.80 -5.75 -5.70 -50.00 NA NO 30.00 NA NO
Last clearing of "show controllers OPTICS" counters never
```

2. Run the **show controllers** *controllertype R/S/I/P* **pm history { 30 sec | 15-min | 24-hour }**[**optics** { *lanenumber* }]**bucket** *value* to view the PM history parameters for OMS and OCH controllers.

Example

This is a sample to view the historical PM parameters on a Coherent DSP controller for the past 2 days using the 24-hour interval.

```
RP/0/RP0/CPU0:Node164#show controllers coherentDSP 0/3/0/0 pm history 24-hour
 fec bucket 2
Sat Oct 19 13:55:13.872 IST

g709 FEC in interval 2 [00:00:00 - 24:00:00 Thu Oct 17 2024]

FEC history bucket type : valid
EC-BITS   : 10121314105194            UC-WORDS  : 0

                            MIN                          AVG
      MAX

PreFEC BER              :    1.43E-04                     1.51E-04
       1.59E-04
PostFEC BER             :    0E-15                        0E-15
       0E-15
Q                       :    11.10                        11.19
       11.20
Q_margin                :    4.70                         4.79
       4.80
Instantaneous Q_margin  :    4.69                         4.79
       4.80

Last clearing of "show controllers OTU" counters never
```

Example

This is a sample to view the historical PM parameters on an OMS controller for the 30-second interval.

```
RP/0/RP0/CPU0:ios_P2A_DT_02#show controllers oms 0/3/0/0 pm history 30-sec
optics 1 bucket 1
Wed Dec 6 11:04:50.821 UTC
Optics in interval 1 [11:04:00 - 11:04:30 Wed Dec 6 2023]
Optics history bucket type : Valid
MIN AVG MAX
OPT[dBm]     : -8.30     -8.27     -8.20
```

```
OPR[dBm]      : -3.00     -1.62     -0.20
OPBR[dBm]      : -11.61    -11.61    -11.51
OPBRR[dB]      : -3.40     -3.31     -3.30
EAGN[dB]       : 2.00      2.00      2.00
EATL[dB]       : 0.00      0.00      0.10
IAGN[dB]       : 5.00      5.00      5.00
IATL[dB]       : 0.00      0.00      0.00
```

6 Pseudo Random Binary Sequence

Topics:

- Pseudo Random Binary Sequence
- Trunk PRBS
- Client PRBS

Explains what pseudo random binary sequences are and highlights their key characteristics and uses.

Pseudo Random Binary Sequence

This section explains how pseudo random binary sequences (PRBS) are used for data integrity checks between NCS 1014 trunk and client links without generating client traffic.

The Pseudo Random Binary Sequence (PRBS) feature enables data integrity checks between NCS 1014 trunk and client links without generating client traffic.

The PRBS feature must be enabled on both the transmitting and receiving ports to ensure error-free traffic during link bring-up. The transmitting port creates and sends a bit pattern to the peer device. The NCS 1014 device verifies that the correct pattern is received. Additionally, PRBS is supported on the ODU4 controller by the 1.2T card.

You can configure PRBS on a coherentDSP or Ethernet controller of a 1.2T, 2.4T, or 2.4TX cards. PRBS can also be configured on a ODU controller of the 1.2T card. Before enabling PRBS, the secondary admin state of the controllers must be set to *maintenance*.

PRBS modes

PRBS operates in several modes, each offering unique functionality:

- **Source mode:** The NCS 1014 trunk port generates a PRBS signal on the line continuously according to the configured PRBS pattern
- **Sink mode:** The NCS 1014 trunk port locks onto the ingress signal according to the configured pattern, analyzes, and reports the errors.
- **Source-Sink mode:** The NCS 1014 trunk port acts as both the PRBS transmitter and receiver, meaning it generates a PRBS signal according to the configured pattern, locks onto the ingress signal with the same pattern, and reports the errors.

Configure PRBS on CoherentDSP controller

Use this procedure to configure the pseudorandom bit sequence (PRBS) test mode on the trunk port of a CoherentDSP controller for testing and validation on specific cards.

Use this task to configure PRBS on the trunk port of the coherentDSP controller of a card.

Procedure

1. Run the **controller coherentDSP** *R/S/I/P* command to enter the coherentDSP controller configuration mode.

   Example

   ```
   RP/0/RP0/CPU0:ios(config)#controller CoherentDSP 0/0/0/7
   ```

2. Run the **secondary-admin-state { normal | maintenance}** command to set the secondary admin state.

   Example

   ```
   RP/0/RP0/CPU0:ios(config-CoDSP)#secondary-admin-state maintenance
   ```

3. Run the **prbs mode {source | sink | source-sink} pattern {pn31 | pn23 | pn15 | pn7}** command to configure the PRBS mode and pattern.

Example

```
RP/0/RP0/CPU0:ios(config-CoDSP)#prbs mode source-sink pattern pn15
```

4. Commit the changes.

Example

```
RP/0/RP0/CPU0:ios(config-CoDSP)#commit
```

Configure PRBS on ODU controller

Use this procedure to configure pseudo-random bit sequence (PRBS) testing on an ODU4 controller's trunk ports for a 1.2T card.

You can configure PRBS in these combinations for an ODU controller on a 1.2T card.

The client ports need to have a physical loopback in all the combinations:

- Near end client and near end trunk ODU4
- Near end client and far end client ODU4
- Near end client and far end trunk ODU4
- Near end trunk and far end trunk ODU4

Use this task to enable PRBS on ODU4 controller's trunk ports of a 1.2T card in configuration mode.

Procedure

1. Run the **controller odu4** *R/S/I/P* command to enter the odu4 controller configuration mode.

Example

```
RP/0/RP0/CPU0:ios(config)#controller odu4 0/0/0/7
```

2. Run the **secondary-admin-state { normal | maintenance}** command to set the secondary admin state.

Example

```
RP/0/RP0/CPU0:ios(config-eth-ctrlr)#secondary-admin-state maintenance
```

3. Run the **opu prbs mode {source | sink | source-sink} pattern {pn31 | pn23 | pn15 | pn7}** command to configure the PRBS mode and pattern.

Example

```
RP/0/RP0/CPU0:ios(config-eth-ctrlr)#prbs mode source-sink pattern pn23
```

4. Commit the changes.

Example

```
RP/0/RP0/CPU0:ios(config-eth-ctrlr)#commit
```

Configure PRBS on Ethernet controller

Use this procedure to configure PRBS testing for client ports on NCS1014 Ethernet controllers to verify signal integrity and performance.

Use this task to configure PRBS on the client ports of an Ethernet controller of the 2.4T and 2.4TX cards.

Procedure

1. Run the **controller** {**fourHundredGigECtrlr**} *R/S/I/P* command to enter the ethernet controller configuration mode.

   Example

   ```
   RP/0/RP0/CPU0:ios(config)#controller FourHundredGigECtrlr 0/3/0/1
   ```

2. Run the **secondary-admin-state { normal | maintenance}** command to set the secondary admin state.

   Example

   ```
   RP/0/RP0/CPU0:ios(config-eth-ctrlr)#sec-admin-state maintenance
   ```

3. Run the **opu prbs mode {source | sink | source-sink} pattern {pn31 | pn23 }** command to configure the PRBS mode and pattern.

   Example

   ```
   RP/0/RP0/CPU0:ios(config-eth-ctrlr)#prbs mode source-sink pattern pn31
   ```

4. Commit the changes.

   Example

   ```
   RP/0/RP0/CPU0:ios(config-eth-ctrlr)#commit
   ```

Verify PRBS on controllers

Use this procedure to configure and run commands to verify PRBS details on various controller types.

Use this task to verify PRBS details on the controllers.

Procedure

1. Run the **show controllers fourHundredGigEctrlr** *R/S/I/P* **prbs-details** command to display PRBS details configured on an Ethernet controller.

Example

```
RP/0/RP0/CPU0:ios#show controllers fourHundredGigEctrlr 0/0/0/4
Fri Sep 25 09:45:18.222 UTC
Operational data for interface FourHundredGigECtrlr0/0/0/4:

State:
    Administrative state: enabled
    Operational state: Up
    LED state: Green On
    Maintenance: Enabled
    AINS Soak: None
      Total Duration: 0 hour(s) 0 minute(s)
      Remaining Duration: 0 hour(s) 0 minute(s) 0 second(s)
    PRBS:
      Status: Locked
      Mode: Source-sink
      Pattern: PN31
      Direction: Line
      Framing: Framed
      Configured Time: 25 Sep 09:44:56 (22 seconds elapsed)
      First Lock Established Time: 25 Sep 09:44:59 (19 seconds elapsed)
      Lock Time(in seconds): 19
      Bit errors: 0
      Lock Found count: 1
      Lock Lost count: 0
      Result: PASS
    Laser Squelch: Disabled
    Insert Idle Ingress: Disabled
    Insert Idle Egress: Disabled
    State transition count: 1
    Last link flapped: 00:29:47
```

2. Run the **show controllers coherentDSP** *R/S/I/P* **prbs-details** command to display PRBS details configured on a coherentDSP controller.

Example

```
RP/0/RP0/CPU0:ios#show  controllers coherentDSP 0/0/0/7 prbs-details
Wed Nov 15 18:13:35.210 UTC

----------------------PRBS details------------------
PRBS Test               : Enable
PRBS Mode               : Source-Sink
PRBS Pattern            : PN15
PRBS Status             : Locked
```

3. Run the **show controllers ODU** *R/S/I/P* **prbs-details** command to display PRBS details configured on an ODU controller where the PRBS status is displayed as **Not Applicable**, when the mode is **Source**.

Example

```
RP/0/RP0/CPU0:ios#show controllers ODU4 0/3/0/8 prbs-details
Mon Jan 11 05:29:12.436 UTC

 -------------------------PRBS details----------------------------------
PRBS Test                       : Enable
PRBS Mode                       : Source
PRBS Pattern                    : PN7
PRBS Status                     : Not Applicable
```

```
--------------------------------------------------
```

Verify the PRBS performance monitor parameters

Use this procedure to verify the PRBS performance monitoring parameters on a coherentDSP, ODU, or Ethernet controller.

Use this task to verify the PRBS performance monitoring parameters on a coherentDSP, ODU, or Ethernet controller.

Procedure

1. Run the **show controllers coherentDSP** *R/S/I/P* **pm** {**current | history** }{**15-min|24-hour**} **prbs** command.

   Example

```
RP/0/RP0/CPU0:ios#show controllers coherentDSP 0/0/0/7 pm current 15-min prbs
Wed Nov 15 18:19:10.308 UTC

 PRBS in the current interval [18:15:00 - 18:19:10 Wed Nov 15 2023]

 PRBS current bucket type : Valid

 EBC          : 0           Threshold : 0         TCA(enable)  : NO
 FOUND-COUNT  : 0           Threshold : 0         TCA(enable)  : NO
 LOST-COUNT   : 0           Threshold : 0         TCA(enable)  : NO

 FOUND-AT-TS  : NULL
 LOST-AT-TS   : NULL

 CONFIG-PTRN  : PRBS_PATTERN_PN15
 STATUS       : LOCKED

Last clearing of "show controllers OTU" counters never
```

2. Run the **show controllers ODU4** *R/S/I/P* **pm** {**current | history** }{**15-min|24-hour**} **prbs** command to view PRBS performance monitoring parameters for a 15-minute sampling interval on an ODU controller.

   Example

```
RP/0/RP0:ios#show controllers ODU4 0/3/0/1 pm current 15-min prbs
Mon Jan 11 00:58:48.327 UTC

PRBS in the current interval [00:45:00 - 00:58:48 Mon Jan 11 2021]
PRBS current bucket type : Valid
EBC                      : 40437528165
FOUND-COUNT              : 1 FOUND-AT-TS : 00:51:22 Mon Jan 11 2021
LOST-COUNT               : 1 LOST-AT-TS  : 00:52:52 Mon Jan 11 2021
CONFIG-PTRN              : PRBS_PATTERN_PN7
Last clearing of "show controllers ODU" counters never
```

3. Run the **show controllers ODU4** *R/S/I/P* **pm** {**current | history** }{**15-min|24-hour**} **prbs** command to view PRBS performance monitoring parameters for a 15-minute sampling interval on an Ethernet controller.

Example

```
RP/0/RP0/CPU0:ios#show controllers fourHundredGigEctrlr 0/0/0/4 pm current
15-min prbs
Wed Nov 15 18:48:19.114 UTC

 PRBS in the current interval [18:45:00 - 18:48:19 Wed Nov 15 2023]

 PRBS current bucket type : Valid

 EBC          : 0           Threshold : 0         TCA(enable)  : NO
 FOUND-COUNT  : 0           Threshold : 0         TCA(enable)  : NO
 LOST-COUNT   : 0           Threshold : 0         TCA(enable)  : NO

 FOUND-AT-TS  : NULL
 LOST-AT-TS   : NULL

 CONFIG-PTRN  : PRBS_PATTERN_PN23
 STATUS       : LOCKED

Last clearing of "show controllers ETHERNET" counters never
```

This table describes the fields of PRBS PM parameters.

Table 51: PRBS PM parameters

PM parameter	Description
EBC	Cumulative count of PRBS bit errors in the sampling interval (15-minute or 24-hour). PRBS bit errors are accumulated only if PRBS signal is locked.
FOUND-COUNT	Number of state transitions from signal unlocked state to signal locked state in the sampling interval. If state change is not observed in the interval, the count is 0.
LOST-COUNT	Number of state transitions from signal locked state to signal unlocked state in the sampling interval. If state change is not observed in the interval, the count is 0.
FOUND-AT-TS	Latest timestamp when the PRBS state moves from unlocked state to locked state in the sampling interval. If state change is not observed in the interval, the value is null.
CONFIG-PTRN	Configured PRBS pattern on the port.
STATUS	Displays the PRBS status.

Clear PRBS bit errors and lock time

Use this procedure to clear bit errors and reset the PRBS lock time on the ODU4 controller for accurate PRBS test results.

Lock time refers to the duration elapsed since the last PRBS lock was detected.

Use this task to clear the bit errors and lock time.

Procedure

1. Run the **show controllers ODU4** *R/S/I/P* **prbs-details** command to show that bit errors are observed during the PRBS test.

   Example

```
RP/0/RP0/CPU0:ios#show controllers odu4 0/2/0/5 prbs-details
Fri Nov 13 03:21:44.191 UTC

-------------------------PRBS details----------------------------------
PRBS Test : Enable
PRBS Mode : Source-Sink
PRBS Pattern : INVERTED PN31
PRBS Status : Locked
PRBS Direction : Line
PRBS Lock Time(in seconds) : 28
PRBS Bit Errors : 23776

----------------------------------------------------
```

2. Run the **clear controller ODU4** *R/S/I/P* **prbs details** command to clear the lock time and bit errors before the PRBS test.

   Example

```
RP/0/RP0/CPU0:ios#clear controller odu4 0/2/0/5 prbs-details
Fri Nov 13 03:21:50.726 UTC
PRBS bit errors cleared
```

   This sample shows the removal of bit errors and lock time.

```
RP/0/RP0/CPU0:ios#show controllers odu4 0/2/0/5 prbs-details
Fri Nov 14 03:21:44.191 UTC
-------------------------PRBS details----------------------------------
PRBS Test : Enable
PRBS Mode : Source-Sink
PRBS Pattern : INVERTED PN31
PRBS Status : Locked
PRBS Direction : Line
PRBS Lock Time(in seconds) : 2
PRBS Bit Errors : 0
```

Trunk PRBS

This section explains the trunk PRBS feature for NCS 1014, including supported PRBS patterns, typical use cases, and interoperability considerations.

Table 52: Feature History

Feature Name	Release Information	Description
Cumulative PRBS on CoherentDSP controllers	Cisco IOS XR Release 24.3.1	The cumulative PRBS (Pseudo-Random Binary Sequence) on CoherentDSP controllers enhances troubleshooting capabilities between the trunk ports. Show coherentDSP R/S/I/P prbs-details command output now includes the newly supported fields.

The trunk PRBS feature performs data integrity checks between trunk links without generating actual client traffic.

NCS 1014 trunk port supports these PRBS patterns:

- PRBS31: Sequence length is from 2^31 -1 bits.
- PRBS23: Sequence length is from 2^23 -1 bits.
- PRBS15: Sequence length is from 2^15 -1 bits.
- PRBS7: Sequence length is from 2^7 -1 bits.

Tip

It is recommended to use these patterns for higher datarates like 100G and 400G:

- high sequence length PRBS patterns
- PRBS inverted pattern

Note

The ethernet PRBS PN23 pattern interoperability is not supported on the 2.4T and 2.4TX cards.

Configure the trunk PRBS

Use this procedure to configure Pseudo-Random Bit Sequence (PRBS) trunk mode on supported NCS1K4-2.4T-K9 cards to verify transmission integrity.

Use this task to configure PRBS trunk mode on the NCS1K4-2.4T-K9 card .

Procedure

1. Run the **controller coherentDSP** *R/S/I/P* command to enter the coherentDSP controller configuration mode.

Example

```
RP/0/RP0/CPU0:ios(config)#controller CoherentDSP0/0/0/7
RP/0/RP0/CPU0:ios(config-CoDSP)#secondary-admin-state maintenance
RP/0/RP0/CPU0:ios(config-CoDSP)#prbs mode source-sink pattern pn15
RP/0/RP0/CPU0:ios(config-CoDSP)#commit
Wed Nov 15 18:11:55.450 UTC
```

2. Run the **show controllers coherentDSP** *R/S/I/P* **prbs-details** command to display PRBS details configured on a coherentDSP controller.

Example

```
RP/0/RP0/CPU0:ios#show controllers coherentDSP 0/0/0/7 prbs-details
Wed Nov 15 18:13:35.210 UTC

----------------------PRBS details------------------
PRBS Test                : Enable
PRBS Mode                : Source-Sink
PRBS Pattern             : PN15
PRBS Status              : Locked
PRBS Lock Time(in seconds)      : 37
PRBS Bit Errors                 : 0
PRBS Found Count                : 1
PRBS Lost Count                 : 0
PRBS Configured Time            : 11 Feb 00:20:43 (719 seconds elapsed)
PRBS First Lock Established Time: 11 Feb 00:32:05 (37 seconds elapsed)
Result Summary                  : PASS
```

The **Result Summary** will display **PASS** if the PRBS bit errors are 0 and the `PRBS elapsed lock time` is equal to the elapsed first lock established time.

3. Run the **clear controllers coherentDSP** *R/S/I/P* **prbs-details** command to clear the counters.

Example

```
clear controller coherentDSP 0/0/0/7 prbs-detailsentDSP
```

4. Run the **show controllers coherentDSP** *R/S/I/P* **prbs-details** command to display cumulative count of PRBS bit errors in the 15-min sampling interval.

Example

```
RP/0/RP0/CPU0:ios#show controllers coherentDSP 0/0/0/7 pm current 15-min prbs
Wed Nov 15 18:19:10.308 UTC

 PRBS in the current interval [18:15:00 - 18:19:10 Wed Nov 15 2023]

 PRBS current bucket type : Valid

 EBC          : 0           Threshold : 0         TCA(enable)   : NO
 FOUND-COUNT  : 0           Threshold : 0         TCA(enable)   : NO
 LOST-COUNT   : 0           Threshold : 0         TCA(enable)   : NO

 FOUND-AT-TS  : NULL
 LOST-AT-TS   : NULL

 CONFIG-PTRN  : PRBS_PATTERN_PN15
```

```
 STATUS       : LOCKED

Last clearing of "show controllers OTU" counters never
```

Client PRBS

Use this procedure to explains how the client PRBS feature performs data integrity checks on client links without generating client traffic and describes supported PRBS patterns.

Table 53: Feature History

Feature Name	Release Information	Description
New PRBS Counters on Ethernet Controllers	Cisco IOS XR Release 24.4.1	The new Pseudo-Random Binary Sequence (PRBS) counters on Ethernet controllers collect statistics in a cumulative manner. The output of the `show controllers` *`controller-type R/S/I/P`* command now includes these counters: • Configured Time • First Lock Established Time. • Lock Time (in seconds) • Bit Errors • Lock Found Count • Lock the Lost Count • Result

The client PRBS feature performs data integrity checks without generating client traffic on client links.

The NCS 1014 client port supports these PRBS patterns:

- PRBS31: Sequence length is from 2^31 -1 bits.
- PRBS23: Sequence length is from 2^23 -1 bits.

Note

In case of muxponder configuration, PRBS is not supported on the split ports of the 2.4TX card.

Configure the client PRBS

Use this procedure to configure PRBS client mode on Cisco NCS1K4-2.4T-K9 and NCS1K14-2.4T-A-K9 hardware to enable bit error rate testing on the four hundred gigabit client controller.

Use this task to configure PRBS client mode on the NCS1K4-2.4T-K9 card .

Procedure

1. Run the **controller** {**fourHundredGigECtrlr**} *R/S/I/P* command to enter the four hundred gigabit client controller configuration mode.

   Example

```
RP/0/RP0/CPU0:ios(config)#controller fourHundredGigECtrlr 0/2/0/4
RP/0/RP0/CPU0:ios(config-eth-ctrlr)#prbs mode source-sink pattern <pn31|pn23>
 direction system <line|system>
RP/0/RP0/CPU0:ios(config-eth-ctrlr)#sec-admin-state maintenance
RP/0/RP0/CPU0:ios(config-eth-ctrlr)#commit
```

2. Run the **show controllers fourHundredGigEctrlr** *R/S/I/P* **prbs-details** command to display four hundred gigabit client controllers details.

   Example

```
RP/0/RP0/CPU0:ios#show controllers fourHundredGigEctrlr 0/0/0/4
Fri Sep 25 09:48:03.959 UTC
Operational data for interface FourHundredGigECtrlr0/0/0/4:

State:
    Administrative state: enabled
    Operational state: Up
    LED state: Green On
    Maintenance: Enabled
    AINS Soak: None
      Total Duration: 0 hour(s) 0 minute(s)
      Remaining Duration: 0 hour(s) 0 minute(s) 0 second(s)
    PRBS:
      Status: Locked
      Mode: Source-sink
      Pattern: PN31
      Direction: Line
      Framing: Framed
      Configured Time: 25 Sep 09:44:56 (187 seconds elapsed)
      First Lock Established Time: 25 Sep 09:47:52 (11 seconds elapsed)
      Lock Time(in seconds): 11
      Bit errors: 0
      Lock Found count: 0
      Lock Lost count: 0
```

```
      Result: PASS
    Laser Squelch: Disabled
    Insert Idle Ingress: Disabled
    Insert Idle Egress: Disabled
    State transition count: 1
    Last link flapped: 00:32:32
```

The **Result** displays **PASS**, only if the **First Lock Established Time** and **Lock Time (in seconds)** are same, and **Bit errors** is 0.

3. Run the **clear controllers fourHundredGigEctrlr** *R/S/I/P* **prbs-details** command to clear four hundred gigabit client controller PRBS statistics.

Example

```
RP/0/RP0/CPU0:ios#clear controller fourHundredGigEctrlr 0/0/0/4 prbs-stats
Fri Sep 25 09:47:52.678 UTC
Operational data for interface FourHundredGigECtrlr0/0/0/4:
State:
    Administrative state: enabled
    Operational state: Up
    LED state: Green On
    Maintenance: Enabled
    AINS Soak: None
      Total Duration: 0 hour(s) 0 minute(s)
      Remaining Duration: 0 hour(s) 0 minute(s) 0 second(s)
    PRBS:
      Status: Locked
      Mode: Source-sink
      Pattern: PN31
      Direction: Line
      Framing: Framed
      Configured Time: 25 Sep 09:44:56 (179 seconds elapsed)
      First Lock Established Time: 25 Sep 09:47:52 (3 seconds elapsed)
      Lock Time(in seconds): 3
      Bit errors: 0
      Lock Found count: 0
      Lock Lost count: 0
      Result: PASS
    Laser Squelch: Disabled
    Insert Idle Ingress: Disabled
    Insert Idle Egress: Disabled
    State transition count: 1
    Last link flapped: 00:32:24
```

4. Run the **show controllers fourHundredGigEctrlr** *R/S/I/P* **prbs-details** command to display four hundred gigabit client controller PRBS bit errors in the 15-min sampling interval.

Example

```
RP/0/RP0/CPU0:ios#show controllers fourHundredGigEctrlr 0/0/0/4 pm current
15-min prbs
Wed Nov 15 18:48:19.114 UTC
 PRBS in the current interval [18:45:00 - 18:48:19 Wed Nov 15 2023]
 PRBS current bucket type : Valid
 EBC          : 0           Threshold : 0         TCA(enable)   : NO
 FOUND-COUNT  : 0           Threshold : 0         TCA(enable)   : NO
 LOST-COUNT   : 0           Threshold : 0         TCA(enable)   : NO
 FOUND-AT-TS  : NULL
```

```
 LOST-AT-TS   : NULL
 CONFIG-PTRN  : PRBS_PATTERN_PN23
 STATUS       : LOCKED

Last clearing of "show controllers ETHERNET" counters never
```

7 Implementing Host Services and Applications

Topics:

- HTTP client application
- Transmission Control Protocol

This section explains the features, purposes, and requirements of Cisco IOS XR Host Services and Applications on routers.

Cisco IOS XR software Host Services and Applications features on the router are used primarily for checking network connectivity and the route a packet follows to reach a destination, mapping a hostname to an IP address or an IP address to a hostname, and transferring files between routers and UNIX workstations.

Prerequisites for implementing Host Services and Applications

Ensure to install the relevant optional RPM package before using the host services or applications.

HTTP client application

This section explains what HTTP client applications are, key attributes, and essential configuration options.

HTTP Client allows files to be transferred from an HTTP server to another device over a network using the HTTP protocol.

You can configure the HTTP Client and its associated parameters by using the **http client** command.

This table lists the commands used to configure HTTP Client settings:

Table 54: Commands used to configure HTTP Client settings

Features	Description
connection	Configure HTTP Client connection by using either retry or timeout options.
response	How long HTTP Client waits for a response from the server for a request message before giving up.
secure-verify-host	Verify host in peer's certificate. To disable verifying this, you can use the command **http client secure-verify-host disable**
secure-verify-peer	Verify authenticity of the peer's certificate.
source-interface	Specifies the source interface for all outgoing HTTP connections. You can enter an IPv4 address, an IPv6 address, or both addresses.
ssl version	SSL version (configuration) to be used for HTTPS requests.
tcp-window-scale scale	Sets the TCP window-scale factor for high-latency links.
version version	HTTP version to be used in HTTP requests. • 1.0–HTTP1.0 will be used for all HTTP requests. • 1.1–HTTP1.1 will be used for all HTTP requests. • default libcurl–will use HTTP version automatically.
vrf name	Name of the VRF.

Configure HTTP Client application

Use this procedure to configure and modify HTTP Client application settings using XR CLI commands.

The HTTP Client application is available by default. You can configure HTTP client settings, or you can view and modify existing settings.

Use this task to configure the settings.

Procedure

1. Enter the XR config mode.
2. Run the **http client** command in XR config mode.

Example

```
Router #configure
Router(config)#http client ?
connection          Configure HTTP Client connection
response           How long HTTP Client waits for a response from the server

                    for a request message before giving up
secure-verify-host  Verify that if server certificate is for the server it
is known as
secure-verify-peer  Verify authenticity of the peer's certificate
source-interface    Specify interface for source address
ssl                 SSL configuration to be used for HTTPS requests
tcp-window-scale    Set tcp window-scale factor for High Latency links
version             HTTP Version to be used in HTTP requests
vrf                 Name of vrf
```

Example

This example shows how to set the TCP window-scale to 8.

```
Router(config)#http client tcp-window-scale 8
```

This example shows how to set the HTTP version to 1.0.

```
Router(config)#http client version 1.0
```

Note

The HTTP Client uses libcurl version 7.30.

Transmission Control Protocol

This section explains how Transmission Control Protocols (TCP) enable reliable, connection-oriented data transfer between computer systems, managing communication and ensuring data integrity.

Transmission Control Protocol (TCP) is a connection-oriented protocol that defines the format of data and acknowledgments exchanged between two computer systems to facilitate data transfer.

- TCP outlines procedures to ensure that the data being transferred arrives correctly at the intended destination.
- TCP enables multiple applications on a system to communicate simultaneously. It manages the demultiplexing of incoming traffic among application programs.

TCP dump file converter

This section explains TCP dump file converters and how they transform binary packet traces into user-friendly formats for efficient network troubleshooting.

The TCP dump file converter is a tool that converts IOS-XR dump files from binary format into user-friendly formats such as PCAP or text.

Key features

The key features of the file converter include:

- The converter is especially useful when Non-Stop Routing (NSR) is disabled or a session flap occurs on your system. In these cases, the TCP process on the NCS system automatically stores the latest 200 packet traces in binary format in a temporary folder.
- TCP dump packet traces also include data about the configured routing protocols and overall network traffic on your system. This data provides insights to help you identify and resolve network infrastructure issues, enabling proactive troubleshooting.

Binary files

You can view packet traces binary files in the user-readable format using these methods:

- Use the **show tcp dump-file** *binary-filename* command to view each binary file in text format manually. For more information, refer to View binary files in text format manually on page 255

  Note

  This process consumes much time, as you have to view each file manually one after another.

- Convert all stored packet traces in binary files into PCAP, text, or both using the **tcp dump-file convert** command.

  For more information, refer to Convert binary files to readable format using TCP dump file converter on page 257. This active approach greatly improves the efficiency and ease of packet analysis during network troubleshooting.

Limitations and restrictions for TCP dump file converter

This section explains the key characteristics and constraints of TCP dump file converters within the system.

The TCP dump file converter has these limitations and restrictions:

- The system only stores the most recent 200 message exchanges that occurred right before the session termination, when NSR is disabled, or during a session flap.
- You can view only one binary file in text format using the **show tcp dump-file** *binary- filename* command.
- TCP dump files are generated by default for BGP, MSDP, MPLS LDP, and SSH.

View binary files in text format manually

Use this procedure to view packet trace binary files in text format without using the TCP dump file converter.

Use this task to view each packet trace binary file in text format without using the TCP dump file converter.

Procedure

1. Run the **show tcp dump-file list all** command to view the list of packet traces in binary files stored in the tcpdump folder.

Example

```
RP/0/RP0/CPU0:ios# show tcp dump-file list all
                        total 1176
                        -rw-r--r-- 1 root root 5927 Nov 22 12:42
31_0_0_126.179.20966.cl.1700656933
                        -rw-r--r-- 1 root root 5892 Nov 22 12:42
31_0_0_127.179.35234.cl.1700656933
                        -rw-r--r-- 1 root root 6148 Nov 22 12:42
31_0_0_149.179.54939.cl.1700656933
                        -rw-r--r-- 1 root root 5894 Nov 22 12:42
31_0_0_155.179.18134.cl.1700656933
                        -rw-r--r-- 1 root root 6063 Nov 22 12:42
31_0_0_156.179.25445.cl.1700656933
                        -rw-r--r-- 1 root root 5860 Nov 22 12:42
31_0_0_161.179.30859.cl.1700656933
                        -rw-r--r-- 1 root root 5832 Nov 22 12:42
31_0_0_173.179.36935.cl.1700656933
                        -rw-r--r-- 1 root root 5906 Nov 22 12:42
31_0_0_190.179.25642.cl.1700656933
```

2. Run the **show tcp dump-file** *binary- filename* command to view each packet traces binary file in text format.

Example

```
RP/0/RP0/CPU0:ios# show tcp dump-file 10_106_0_73.179.34849.cl.1707424077
location 0/RP0/CPU0
                        Filename: 10_106_0_73.179.34849.cl.1707424077


================================================================
                        Connection state is CLOSED, I/O status: 0, socket
status: 103
                        PCB 0x00007f86bc05e3b8, SO 0x7f86bc05e648, TCPCB
0x7f86bc0c3718, vrfid 0x60000000,
                        Pak Prio: Medium, TOS: 192, TTL: 1, Hash index: 1593

                        Local host: 10.106.0.72, Local port: 179 (Local App
PID: 11354)
                        Foreign host: 10.106.0.73, Foreign port: 34849
                        (Local App PID/instance/SPL_APP_ID: 11354/1/0)

                        Current send queue size in bytes: 0 (max 0)
                        Current receive queue size in bytes: 0 (max 0)
mis-ordered: 0 bytes
                        Current receive queue size in packets: 0 (max 0)

                        Timer          Starts    Wakeups         Next(msec)
                        Retrans        103448          8                 0
                        SendWnd             0          0                 0
                        TimeWait            1          0                 0
                        AckHold        106815     106545                 0
                        KeepAlive           1          0                 0
                        PmtuAger            0          0                 0
                        GiveUp              0          0                 0
                        Throttle            0          0                 0
                        FirstSyn            0          0                 0

                       iss: 161240548   snduna: 163206936   sndnxt: 163206936

                       sndmax: 163206936   sndwnd: 63104       sndcwnd: 18120
```

```
                        irs: 3691232436  rcvnxt: 3693473072  rcvwnd: 26099
 rcvadv: 3693499171
```

This sample shows only a portion of the full output; the complete output provides additional details.

Convert binary files to readable format using TCP dump file converter

Use this procedure to convert TCP dump packet trace files in binary format to PCAP and text files for easier analysis and sharing.

Use this task to convert the dump packet traces in binary files into PCAP and text formats.

Procedure

1. Run the **tcp dump-file convert all-formats all** command to convert the dump packet traces in binary files into PCAP and text formats.

   Example

```
RP/0/RP0/CPU0:ios# tcp dump-file convert all-formats all
                        ascii file is saved at :
/harddisk:/decoded_dumpfiles/text_tcpdump_peer_all_node0_RP0_CPU0_2024_3_19_10_8_53.462070.txt

                        pcap file is saved at :
/harddisk:/decoded_dumpfiles/pcap_tcpdump_peer_all_node0_RP0_CPU0_2024_3_19_10_8_40.154838.pcap

                        [OK]
```

   By default, the system stores the converted files in the "decoded_dumpfiles" folder on the "hard disk".

   Use the **location node-id** and **file** *file path* keywords to save the converted TCP dump file to your desired location.

   For example, **tcp dump-file convert all-formats all location** *0/RP0/CPU0* **file** */harddisk:/demo2* .

```
RP/0/RP0/CPU0:ios# tcp dump-file convert all-formats all location 0/RP0/CPU0
 file /harddisk:/demo2
                        ascii file is saved at : /harddisk:/demo2.txt
                        pcap file is saved at : /harddisk:/demo2.pcap
                        [OK]
```

2. Run the **run cat text** *file path* command to view the converted text file in the CLI.

   Example

```
RP/0/RP0/CPU0:ios# run cat
/harddisk:/decoded_dumpfiles/text_tcpdump_peer_all_node0_RP0_CPU0_2024_3_19_10_8_53.462070.txt

                        Filename: 2024_3_19_10_8_53.462070


================================================================
                        Connection state is CLOSED, I/O status: 0, socket
status: 103
                        PCB 0x0000000000f47a80, SO 0xf476d0, TCPCB 0xf6a370,
```

```
 vrfid 0x60000000,
                       Pak Prio: Medium, TOS: 192, TTL: 255, Hash index: 563

                       Local host: 14:11:11::1, Local port: 47743 (Local App
 PID: 19579)
                        Foreign host: 14:11:11::2, Foreign port: 179
                        (Local App PID/instance/SPL_APP_ID: 19579/1/0)

                        Current send queue size in bytes: 0 (max 0)
                        Current receive queue size in bytes: 0 (max 0)
mis-ordered: 0 bytes
                        Current receive queue size in packets: 0 (max 0)

                        Timer          Starts    Wakeups         Next(msec)
                        Retrans            70          2                 0
                        SendWnd             0          0                 0
                        TimeWait            2          0                 0
                        AckHold            66         61                 0
                        KeepAlive           1          0                 0
                        PmtuAger            0          0                 0
                        GiveUp              0          0                 0
                        Throttle            0          0                 0
                        FirstSyn            1          1                 0

                      iss: 3113104891  snduna: 3113106213  sndnxt: 3113106213

                        sndmax: 3113106213  sndwnd: 31523       sndcwnd: 2832

                        irs: 4250126727  rcvnxt: 4250128049  rcvwnd: 31448
 rcvadv: 4250159497
```

This sample shows only a portion of the full output; the complete output provides additional details.

3. Run the **scp** command to copy the converted packet traces from the system to your local computer and view the converted PCAP file.

8 AppSel Code Provisioning

Topics:

- Application select code provisioning
- Configure an AppSel code on an optical module

This section explains how AppSel codes enable the configuration of different application modes for optical modules.

This chapter introduces Application Select (AppSel) code provisioning, a key feature for configuring the operating modes of optical modules. It details the benefits, operational mechanisms, and configuration steps for AppSel code provisioning.

Table 55: Feature History

Feature Name	Release Information	Feature Description
Application select code provisioning for QXP card	Cisco IOS XR Release 25.3.1	You can now configure and select application codes directly on a QSFP-DD module connected to a QXP-K9 card using the CLI. The pluggable modules supported is DP04QSDD-ULH-A1. This enhancement simplifies provisioning by allowing you to choose from advertised application modes such as 400ZR, OpenZR+, and others directly through the interface. Once selected, the host device activates the appropriate code, ensuring compatibility and streamlining configuration. The **appsel simple code** keyword is introduced in the **controller optics** command. The **appsel detailed**, **appsel advertised**, and **appsel active** keywords are introduced in the **show controller optics** command.

Application select code provisioning

This section explains the purpose, structure, and operational context of application select codes (AppSel codes) for QDD optical modules.

Application select code, also known as AppSel code, is a feature that:

- allows the host device to choose the operating mode of a QDD module
- allows you to configure the media code, and
- specifies how to configure the optical side of a module.

Common Management Interface Specification

The Common Management Interface Specification (CMIS) specifications set rules for how QDD modules work and how a host device sets them up. CMIS provides a consistent way for host devices, such as routers or switches, to communicate with and control optical modules, regardless of the module manufacturer.

Understanding AppSel codes and module operation modes

Each QDD module can operate in different modes, identified by a unique AppSel code. This code acts like a unique ID for each mode. Each mode has an application descriptor, which explains how the module handles data. It describes how signals are processed between the connections on the host side and the optical side.

The optical side is also known as the media side of the module. The AppSel code includes a media code, which tells the module how to set up its optical side. The host software uses this media code to control the module's optical interface. The host software also sets up other components, like the physical layer (PHY), SerDes, and MacPort, to complete the data path.

AppSel code storage and compatibility

Modules store a list of the AppSel codes they support in their EEPROM memory. This helps the host system or device know which settings the module can use. Some codes, like 400G-OIF-ZR and 400G-OpenZR+, are standard and follow industry rules. Other codes are custom, created by third-party vendors to provide users with more options on a single module. These custom codes may cause compatibility problems; for instance, Cisco routers may not function properly with modules using unrecognized custom codes.

Application mode selection

This feature allows users to select from all application modes advertised by the optical module. You can choose all application modes a module supports.

AppSel operation mode parameters

AppSel supports operation modes based on these parameters:

- Data rate, such as 100GE or 400GE
- Signal type
- Signal processing between host side and media side
- Optical configuration, based on the media code, which is part of the AppSel code.

Supported card and pluggables

In Release 25.3.1, AppSel is supported on the DP04QSDD-ULH-A1 pluggable connected to the QXP-K9 card.

Benefits of AppSel code provisioning

This section provides details about how AppSel code provisioning enables flexible and efficient configuration of optical modules and reduces complexity.

This section explains the benefits of provisioning AppSel code for flexible and efficient configuration of optical modules.

These are the benefits of provisioning AppSel code:

- Enables you to choose any application mode supported by the optical module for greater flexibility.
- Enables direct configuration of the NPU, PHY, and optics to match the selected application's datapath.
- Removes the need for Cisco IOS XR software to implement new proprietary modes for each vendor, simplifying software requirements.
- Allows you to directly specify the desired AppSel code, enabling straightforward configuration without requiring Cisco IOS XR software to interpret the mode.
- Eliminates the extra step of mapping custom vendor codes, reducing delays in supporting new module vendors.

Configuration guidelines and restrictions for AppSel code provisioning

This section provides guidelines and mandatory restrictions necessary for configuring and managing AppSel code provisioning for optical modules.

This section explains how to properly configure and manage AppSel code provisioning for optical modules and describes its restrictions.

Configuration guidelines for AppSel code provisioning

You must follow these configuration guidelines for AppSel code provisioning.

- This feature is not enabled by default. You must configure it to take effect.
- The maximum number of applications supported depends on the module that is advertised in the AppSel list.
- For ULH pluggable, the AppSel code is a mandatory parameter. If it is not configured, a "Mandatory Configuration Missing" alarm is triggered and optics laser remains in off state.
- If you configure an invalid Appsel code during setup, a "Provisioning Failure" alarm will be raised.
- For AppSel codes that use PCS modulation, the bits-per-symbol value is not supported. The CLI displays 0 for these AppSel codes; this value does not indicate an invalid AppSel code or a provisioning failure.

How AppSel code provisioning works

This section describes how AppSel code provisioning determines the operating mode for optical modules, the actors that coordinate, and the step-by-step process.

Summary

The key components involved in the AppSel code provisioning are:

- Optical side: The optical side or the media side refers to the part of a pluggable module, such as a QDD or other optical transceiver that connects to and communicates with the optical network. It is the interface responsible for converting electrical signals, from the host device, into optical signals for transmission over fiber optic cables, and vice versa for receiving signals.
- Host side: The host side refers to the part of a pluggable module, such as a QDD or other optical transceiver that interfaces with the host device. A host device is typically a network device like a router, switch, or server. It is responsible for handling and processing electrical signals exchanged between the module and the host device.

- Optics driver: The entity that collects all supported application codes from the module. Users can see all supported application codes and select any one of the supported application codes.
- Application codes: The unique codes that represent operational modes of the optical module.
- Optics Management Agent (MA): The entity that sends the default configuration to the OSA driver if no user configuration is provided. It also manages fallback behavior when no application code is selected.

Workflow

These stages describe how the AppSel code provisioning process works.

1. AppSel code identifies the optical module modes when the modules are plugged into a router.
2. AppSel code points to an application descriptor. In this stage, the AppSel code acts as a sequence number for an application descriptor.
3. The application descriptor defines the configuration. In this stage, the application descriptor describes a functional transmission configuration, including signal processing between host lanes and media lanes.
4. The AppSel code that contains the media code configures the media side of the optical module.
5. The host software applies the media code to configure the optical interface of the optical module.
6. Based on the module's host side interface, you can configure PHY, NPU SerDes, and MacPort.
7. The host side and media side configurations complete, establishing the datapath.

Result

The host enables AppSel code provisioning as the data path is complete between the host side and media side. This ensures that the optical module operates correctly and efficiently in the desired mode, with proper coordination between the host side interface and the media side.

Configure an AppSel code on an optical module

Use this procedure to configure an AppSel code to enable the optical module to operate in a specific application mode, such as 400ZR or OpenZR+.

Configure the AppSel code to enable the optical module to operate in a specific application mode, such as 400ZR or OpenZR+.

AppSel codes are advertised by the module and must be validated before configuration. This ensures compatibility between the host and the module.

Follow these steps to identify the AppSel codes available in a pluggable module and to configure them.

Procedure

1. Identify the AppSel code that needs to be configured on a particular port from the list of available app codes.

   Example

```
RP/0/RP0/CPU0:ios#sh controllers optics 0/0/0/0 AppSel advertised
Thu Aug 14 07:17:38.095 UTC
-----------------------------------------------------------------------------------------------

  App-ID  |  Host-ID                          |  Media-ID
  |  Standard                  |  Host      |  Power            |
          |                                   |
```

```
  |                            |  Supported|  Consumption(W)  |
-----------------------------------------------------------------------------------------------------

 1       |  17    ETH 400GAUI-8 C2M (Annex |  100   OpenROADM FLEXO-4e-DO-QP
|  OpenROADM                 |  Yes      |  n/a             |
 2       |  15    ETH 200GAUI-4 C2M (Annex |  100   OpenROADM FLEXO-4e-DO-QP
|  OpenROADM                 |  No       |  n/a             |
 3       |  13    ETH 100GAUI-2 C2M (Annex |  100   OpenROADM FLEXO-4e-DO-QP
|  OpenROADM                 |  Yes      |  n/a             |
 4       |  17    ETH 400GAUI-8 C2M (Annex |  216   FlexO 4e DPO 098Gbd Prop
|  FlexO                     |  Yes      |  n/a             |
 5       |  15    ETH 200GAUI-4 C2M (Annex |  216   FlexO 4e DPO 098Gbd Prop
|  FlexO                     |  No       |  n/a             |
 6       |  13    ETH 100GAUI-2 C2M (Annex |  216   FlexO 4e DPO 098Gbd Prop
|  FlexO                     |  Yes      |  n/a             |
 7       |  17    ETH 400GAUI-8 C2M (Annex |  201   FlexO 4e DPO 087Gbd Prop
|  FlexO                     |  Yes      |  n/a             |
 8       |  15    ETH 200GAUI-4 C2M (Annex |  201   FlexO 4e DPO 087Gbd Prop
|  FlexO                     |  No       |  n/a             |
 9       |  13    ETH 100GAUI-2 C2M (Annex |  201   FlexO 4e DPO 087Gbd Prop
|  FlexO                     |  Yes      |  n/a             |
 10      |  17    ETH 400GAUI-8 C2M (Annex |  194   FlexO 4e DPO 075Gbd Prop
|  FlexO                     |  Yes      |  n/a             |
 11      |  15    ETH 200GAUI-4 C2M (Annex |  194   FlexO 4e DPO 075Gbd Prop
|  FlexO                     |  No       |  n/a             |
 12      |  13    ETH 100GAUI-2 C2M (Annex |  194   FlexO 4e DPO 075Gbd Prop
|  FlexO                     |  Yes      |  n/a             |
 13      |  17    ETH 400GAUI-8 C2M (Annex |  192   FlexO 4e DPO 066Gbd Prop
|  FlexO                     |  Yes      |  n/a             |
 14      |  15    ETH 200GAUI-4 C2M (Annex |  192   FlexO 4e DPO 066Gbd Prop
|  FlexO                     |  No       |  n/a             |
 15      |  13    ETH 100GAUI-2 C2M (Annex |  192   FlexO 4e DPO 066Gbd Prop
|  FlexO                     |  Yes      |  n/a             |
 16      |  17    ETH 400GAUI-8 C2M (Annex |  198   OpenZR+ 400G 16QAM Propr
|  OpenZR+                   |  Yes      |  n/a             |
 17      |  15    ETH 200GAUI-4 C2M (Annex |  198   OpenZR+ 400G 16QAM Propr
|  OpenZR+                   |  No       |  n/a             |
 18      |  13    ETH 100GAUI-2 C2M (Annex |  198   OpenZR+ 400G 16QAM Propr
|  OpenZR+                   |  Yes      |  n/a             |
 19      |  17    ETH 400GAUI-8 C2M (Annex |  70    OpenZR+ ZR400-OFEC-16QAM
|  OpenZR+                   |  Yes      |  n/a             |
 20      |  15    ETH 200GAUI-4 C2M (Annex |  70    OpenZR+ ZR400-OFEC-16QAM
|  OpenZR+                   |  No       |  n/a             |
 21      |  13    ETH 100GAUI-2 C2M (Annex |  70    OpenZR+ ZR400-OFEC-16QAM
|  OpenZR+                   |  Yes      |  n/a             |
 22      |  17    ETH 400GAUI-8 C2M (Annex |  54    OpenZR+ ZR400-OFEC-16QAM
|  OpenZR+                   |  Yes      |  n/a             |
 23      |  15    ETH 200GAUI-4 C2M (Annex |  54    OpenZR+ ZR400-OFEC-16QAM
|  OpenZR+                   |  No       |  n/a             |
 24      |  13    ETH 100GAUI-2 C2M (Annex |  54    OpenZR+ ZR400-OFEC-16QAM
|  OpenZR+                   |  Yes      |  n/a             |
 25      |  60    OTN-ITU-T FOIC1.2 (ITU-T |  220   FlexO 4 DPO 101Gbd Propr
|  FlexO                     |  No       |  n/a             |
 26      |  60    OTN-ITU-T FOIC1.2 (ITU-T |  202   FlexO 4 DPO 087Gbd Propr
|  FlexO                     |  No       |  n/a             |
 27      |  60    OTN-ITU-T FOIC1.2 (ITU-T |  196   FlexO 4 DPO 079Gbd Propr
|  FlexO                     |  No       |  n/a             |
 28      |  60    OTN-ITU-T FOIC1.2 (ITU-T |  193   FlexO 4 DPO 069Gbd Propr
|  FlexO                     |  No       |  n/a             |
```

```
--------------------------------------------------------------------------------------------------------------

RP/0/RP0/CPU0:ios#sh controllers optics 0/0/0/0 AppSel detailed
Thu Aug 14 07:17:44.806 UTC
--------------------------------------------------------------------------------------------------------------

  App-ID  |  Host-ID     |  Media-ID    |  Host Lane |  Media Lane|  Host
Lane   |  Media Lane  |  Host      |
          |              |              |  Count     |  Count     |  Assign
     |  Assign      |  Supported |
--------------------------------------------------------------------------------------------------------------

  1       |  17          |  100         |  8         |  1         |  0x1
     |  0x1         |  Yes       |
  2       |  15          |  100         |  4         |  1         |  0x11
     |  0x1         |  No        |
  3       |  13          |  100         |  2         |  1         |  0x55
     |  0x1         |  Yes       |
  4       |  17          |  216         |  8         |  1         |  0x1
     |  0x1         |  Yes       |
  5       |  15          |  216         |  4         |  1         |  0x11
     |  0x1         |  No        |
  6       |  13          |  216         |  2         |  1         |  0x55
     |  0x1         |  Yes       |
  7       |  17          |  201         |  8         |  1         |  0x1
     |  0x1         |  Yes       |
  8       |  15          |  201         |  4         |  1         |  0x11
     |  0x1         |  No        |
  9       |  13          |  201         |  2         |  1         |  0x55
     |  0x1         |  Yes       |
  10      |  17          |  194         |  8         |  1         |  0x1
     |  0x1         |  Yes       |
  11      |  15          |  194         |  4         |  1         |  0x11
     |  0x1         |  No        |
  12      |  13          |  194         |  2         |  1         |  0x55
     |  0x1         |  Yes       |
  13      |  17          |  192         |  8         |  1         |  0x1
     |  0x1         |  Yes       |
  14      |  15          |  192         |  4         |  1         |  0x11
     |  0x1         |  No        |
  15      |  13          |  192         |  2         |  1         |  0x55
     |  0x1         |  Yes       |
  16      |  17          |  198         |  8         |  1         |  0x1
     |  0x1         |  Yes       |
  17      |  15          |  198         |  4         |  1         |  0x11
     |  0x1         |  No        |
  18      |  13          |  198         |  2         |  1         |  0x55
     |  0x1         |  Yes       |
  19      |  17          |  70          |  8         |  1         |  0x1
     |  0x1         |  Yes       |
  20      |  15          |  70          |  4         |  1         |  0x11
     |  0x1         |  No        |
  21      |  13          |  70          |  2         |  1         |  0x55
     |  0x1         |  Yes       |
  22      |  17          |  54          |  8         |  1         |  0x1
     |  0x1         |  Yes       |
  23      |  15          |  54          |  4         |  1         |  0x11
     |  0x1         |  No        |
  24      |  13          |  54          |  2         |  1         |  0x55
     |  0x1         |  Yes       |
  25      |  60          |  220         |  2         |  1         |  0x55
```

```
     |  0x1          |  No         |
  26      |  60           |  202         |  2          |  1          |  0x55
     |  0x1          |  No         |
  27      |  60           |  196         |  2          |  1          |  0x55
     |  0x1          |  No         |
  28      |  60           |  193         |  2          |  1          |  0x55
     |  0x1          |  No         |
```

2. Configure the identified AppSel code on the optics interface.

   Example

```
RP/0/RP0/CPU0:ios#configure
Wed Mar 27 14:12:49.932 UTC
RP/0/RP0/CPU0:ios(config)#controller optics 0/0/0/0
RP/0/RP0/CPU0:ios((config-Optics))#AppSel simple code 13
RP/0/RP0/CPU0:ios((config-Optics))#commit
```

3. Verify the AppSel code configured on the optics.

   Example

```
RP/0/RP0/CPU0:ios#
RP/0/RP0/CPU0:ios#sh controllers optics 0/0/0/0 AppSel active
Thu Aug 14 07:17:50.861 UTC

 Instance           :1
 App-ID             :13
 Host-ID            :17  ETH 400GAUI-8 C2M (Annex 120E)
 Media-ID           :192  FlexO 4e DPO 066Gbd Proprietary
 Host Lane Count    :8
 Media Lane Count   :1
 Host Lane Assign   :0x1
 Media Lane Assign  :0x1
```

The optical module operates in the selected application mode, ensuring compatibility and optimal performance.

What to do next

- Monitor the interface status and confirm the active AppSel code.
- Ensure that alarms are cleared, and the interface is operational.

Part II

Configure Metro Data Center Interconnect Open Line System 2.0 Modules

Topics:

- MOLS 2.0
- Configure Coherent Probe
- Configure OTDR
- Optical Safety on EDFA2 Card
- Span Loss
- Channel APC
- Amplifier APC
- Internode Topology Discovery and Communication

9 MOLS 2.0

Topics:

- EDFA2 line card
- NCS1K-MD-32x-CE mux and demux passive patch panels

This section lists the supported hardware modules, pluggables, and features for MOLS 2.0 hosted on the NCS 1014 chassis.

The latest Metro DCI Open Line System, MOLS 2.0 is hosted on the NCS 1014 chassis. This includes support for:

- an EDFA amplifier (NCS1K14-EDFA2) that hosts
  - an OTDR pluggable (ONS-QSFP-OTDR),
  - a coherent probe pluggable (DP01QSDD-ZT5-A1), and
  - an OSC pluggable (ONS-SC-PTP-1510), and
  - a pair of 32-channel colored add/drop passive modules
    - NCS1K-MD-32O-CE
    - NCS1K-MD-32E-CE

EDFA2 line card

This section provides the purpose, structure, and key features of EDFA2 line cards used for optical amplification in DWDM networks

The new EDFA2 line card is an optical amplifier that serves as an essential component of the line system solution. It functions as a DWDM optical terminal and includes a C-band bidirectional amplifier with channel power control capabilities

This card enhances optical signal amplification along with the integration support for the Optical Supervisory Channel (OSC), Optical Time Domain Reflectometer (OTDR), and QDD Coherent Probe pluggables.

This image shows the EDFA2 optical amplifier line card.

Figure 15: NCS1K14-EDFA2 optical amplifier line card

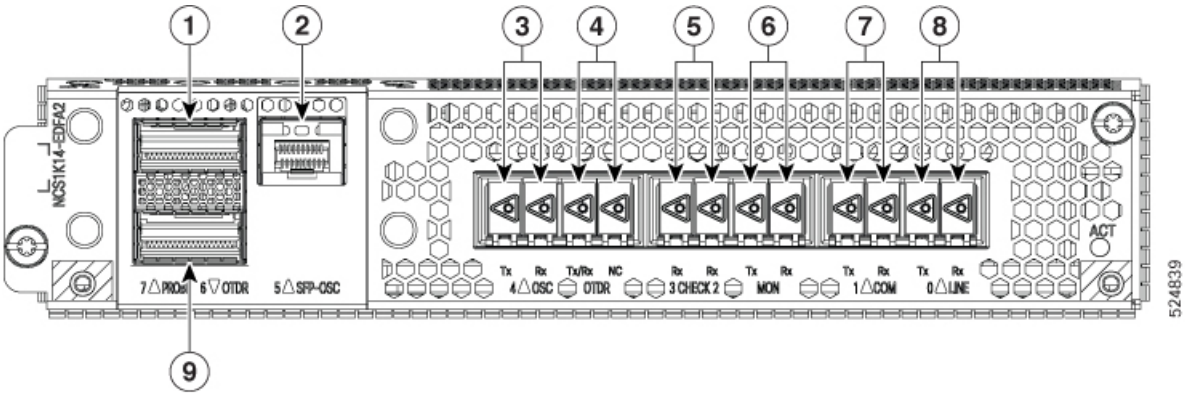

Table 56: EDFA2 line card interfaces

Callout	Connector label	Connector type	Port name
1	PROBE	LC	Coherent probe 7
2	SFP-OSC	LC	OSC port 5
3	OSC	LC	OSC TX 4
			OSC RX 4
4	OTDR	LC	OTDR TX/RX
			OTDR NC
5	CHECK	LC	CHECK RX 2
			CHECK RX 3
6	MON	LC	MON TX
			MON RX
7	COM	LC	COM TX 1
			COM RX 1
8	LINE	LC	LINE TX 0
			LINE RX 0

Callout	Connector label	Connector type	Port name
9	OTDR	LC	OTDR port 6

Figure 16: EDFA2 amplifier line card optical diagram

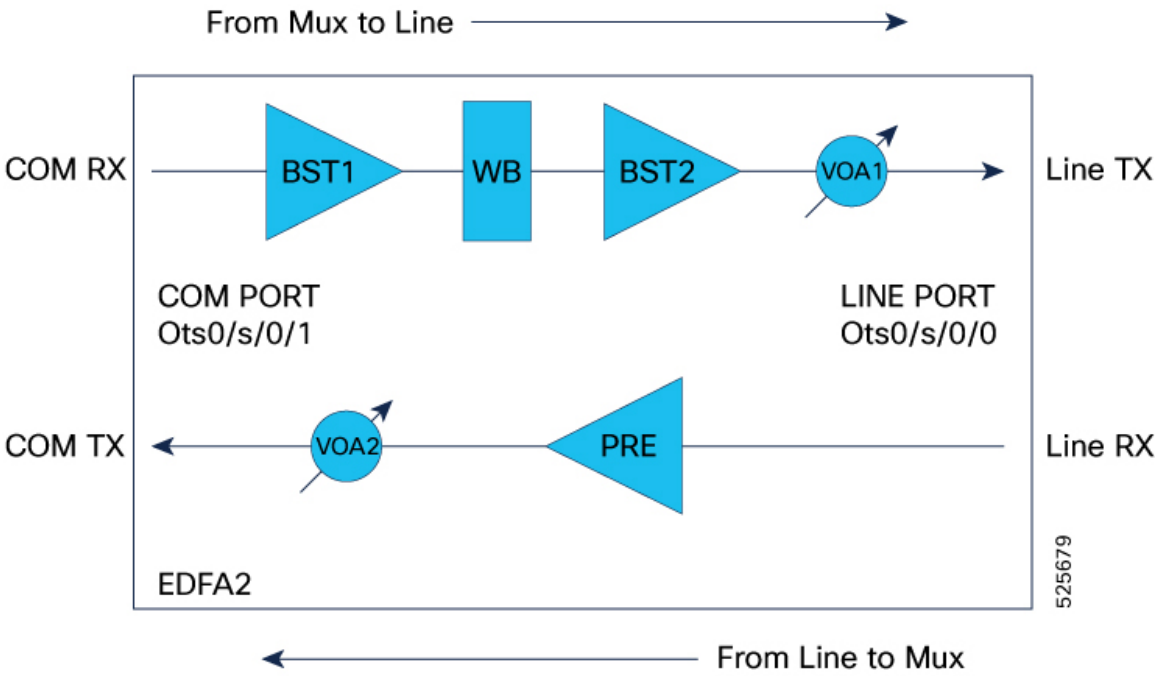

Table 57: Key components of the EDFA2 amplifier line card

Monodirectional transmitter section	Monodirectional receiver section
Path: From COM-RX port to LINE-TX port **Components:** • **Booster EDFA (BST1):** Features two switchable fixed gains. • **Wavelength Blocker (WB):** Offers flexible spectrum capability to equalize or block different sections of the C-band optical spectrum. • **Booster EDFA (BST2):** Provides true variable gain. • **Variable Optical Attenuator (VOA1):** Regulates signal power at the LINE-TX port.	**Path:** From LINE-RX port to COM-TX port **Components:** • **EDFA Preamplifier (PRE):** Offers true variable gain with two programmable gain ranges. • **Variable Optical Attenuator (VOA2):** Regulates signal power at the COM-TX port.

EDFA2 line card features

These are EDFA2 line card features:

- The card comprises an optical module, pluggable cages for OTDR and OSC, and a DWDM trunk interface. It features integrated management for alarms, performance monitoring, and optical power level control.
- The EDFA2 card consumes a maximum power of 60W excluding any optics.

- The EDFA2 card consumes a maximum power of 82W including OSC, OTDR, and Coherent probe.
- NCS1014 chassis with Single EDFA2 card and FAN-P module consumes a maximum power of 360W including OSC, OTDR, and Coherent probe.
- For Release 25.1.1, only single-span point-to-point configurations are supported. This setup requires two nodes, each equipped with an EDFA2 card, with the span connected to their respective Line ports.

Supported modules and optical channel

The EDFA2 line card supports these modules and channel:

- ONS-QSFP-OTDR – ONS OTDR pluggable module
- DP01QSDD-ZT5-A1 – QDD coherent probe pluggable module
- ONS-SC-PTP-1510 – SFP Optical Supervisory Channel

EDFA2 controllers

This section explains the different controller types available for the EDFA2 card and their main functions.

Table 58: Feature History

Feature Name	Release Information	Feature Description
NCS1K14-EDFA2 Port configurations	Cisco IOS XR Release 25.1.1	The NCS1K14-EDFA2 line card is an optical amplifier card that offers OTDR, coherent probe, and OSC support to NCS 1014 networks. This card has an OTDR QDD port for initiating OTDR scan and bidirectional OTDR LC ports to test the fiber health. The probe QDD port enables optical line verification towards the NCS1K-MD-32X-CE patch panel. This card supports different datapath controllers such as: • OTS controller • OTS-OCH controller • OSC controller • Optics controller This card provides up to 796 slices at 6.25GHz spacing. The card has an internal Wave Blocker that can attenuate the optical power of provisioned channels slice by slice at 6.25 GHz. You can set up this EDFA card in flex grid mode to adapt signal amplification on each channel.

There are four types of controllers for EDFA2 card. The controllers are the OTS, OTS-OCH, OSC, and Optics controllers.

Table 59: Controller types supported on EDFA2 card

Controller types	Description
Optical Transport Section (OTS)	The OTS controller holds all the optical parameters for the OTS optical interfaces.
OTS-OCH	The OTS-OCH controller is created on the channel of the EDFA2 card using the `hw-module` command in Flex-Grid configuration.
Optical Service Channel (OSC)	The OSC controller represents the optical layer of the OSC channel. Line ports host the OSC controller.
GiabitEthernet for OSC	The OSC controller represents SFP pluggable for Optical Supervisory Channel/Gigabit Ethernet Interface.
OTDR	The OTS controller is a function or component within a system that manages the operation of an OTDR device.
Optics	The Optics controller represents Coherent Probe and SFP pluggable for Optical Supervisory Channel/Gigabit Ethernet Interface.
CoherentDSP	The Optics controller represents the QSFP DD for Coherent Probe.

EDFA2 controllers parameters

This section explains the different controller types available for the EDFA2 card and their main functions.

Controllers holds all the optical parameters for the optical interfaces. The optical interface has different capabilities depending on its hardware components such as photodiode, VOA, amplifier, and OCM.

OTS controller:

The OTS controller is created by default when you bring up the EDFA2 line card. In the EDFA2 line card, the OTS controller is supported on the LINE and COM optical ports. OTS controllers associated to LINE and COM optical ports will be in the form of:

- LINE: controller Ots 0/<slot-id>/0/0 where slot-id is 0…3
- COM: controller Ots 0/<slot-id>/0/1 where slot-id is 0…3
- CHECK:
  - controller Ots 0/<slot-id>/0/2 where slot-id is 0…3
  - controller Ots 0/<slot-id>/0/3 where slot-id is 0…3

OSC controller:

The EDFA2 card includes Optical Service Channel (OSC) ports, which enable the creation of a bidirectional communication channel to connect two nodes in a DWDM network.

- controller Osc 0/<slot-id>/0/0 where slot-id is 0…3 (this represents the OSC channel towards LINE-TX)
- controller Osc 0/<slot-id>/0/4 where slot-id is 0…3 (this represents the OSC physical port towards the OSC pluggable)

Optics:

- controller optics 0/<slot-id>/0/5 where slot-id is 0…3
- controller optics 0/<slot-id>/0/7 where slot-id is 0…3

The tables list the OTS controller parameters.

Table 60: Egress LINE and COM ports OTS parameters

Parameter	Description	Applicable modules	Value	Default
egress-ampli-mode	amplifier mode	amplifier	gain mode	gain mode
egress-ampli-gain-range	amplifier gain range	amplifier	normal and extended: on ots 0/<slot-id>/0/0 only normal is supported	normal
egress-ampli-gain	amplifier gain set point	amplifier	ots 0/<slot-id>/0/0 from 12 to 27 dB ots 0/<slot-id>/0/1 from 0 to 28 dB in normal ots 0/<slot-id>/0/1 from 20 to 39 dB in extended	on ots 0/x/0/0 default gain is 17 dB on ots 0/x/0/1 default gain is 5 dB
egress-ampli-tilt	amplifier tilt set point	amplifier	-5 to 5 dB	0 dB
egress-ampli-safety-control-mode	amplifier safety mode configuration	amplifier	auto and disabled	auto
egress-ampli-osri	amplifier optical safety remote interlock	amplifier	on and off	off
egress-ampli-force-apr	amplifier automatic power reduction configuration	amplifier	on and off	off
egress-ampli-br-high-threshold	amplifier threshold value for detection of high reflected power at the LINE TX port.	amplifier	-50 to 0 dB	-17 dB
tx-voa-attenuation	TX VOA attenuation set point	VOA	ots 0/<slot-id>/0/0 from 0 to 20 dB ots 0/<slot-id>/0/1 form 0 to 15 dB	0 dB

Parameter	Description	Applicable modules	Value	Default
rx-low-threshold	threshold value for detection of power loss at the LINE and COM RX ports.	photodiode	ots 0/<slot-id>/0/0 -47 to 21 dBm ots 0/<slot-id>/0/1 -30 to 25 dBm	ots 0/x/0/0 -47 dBm ots 0/x/0/1 -30 dBm
tx-low-threshold	Threshold value for detection of power loss at the LINE and COM TX ports.	photodiode	ots 0/<slot-id>/0/0 -22 to 25 dBm ots 0/<slot-id>x/0/1 -20 to 25 dBm	-7 dBm

Table 61: LINE port OTS controller parameters

Parameter	Description	Applicable modules	Value	Default
egress-channel-slice	channel slice attenuation set point	wavelength blocker	0 to 15 dB attenuating signal 15.1 to 25 dB blocking signal	25 dB
egress-ampli-br-high-threshold	amplifier threshold value for detection of high reflected power at the LINE TX port.	amplifier	-50 to 0 dB	-17 dB

Table 62: Ingress COM port OTS controller parameters

Parameter	Description	Applicable modules	Value	Default
ingress-ampli-gain-range	amplifier gain range	amplifier	normal and extended	normal
ingress-ampli-gain	amplifier gain set point	amplifier	normal 5 to 11 dB extended 17 to 23 dB	normal 5 extended 17
ingress-ampli-osri	enable or disable OSRI at the LINE and COM ports	amplifier	on and off	off

Table 63: CHECK port OTS controller parameters

Parameter	Description	Applicable modules	Value	Default
rx-low-threshold	threshold value for detection of power loss at the CHECK 2 and 3 ports.	photodiode	-40 to 10 dBm	-37 dBm

Table 64: Optical ports OTS controller parameters

Parameter	Description	Applicable modules	Value
OTS controller Shutdown (LINE/COM Port)	turn off all the amplifiers on that port	amplifier	shutdown and no shutdown

OTS-OCH controller

OCH controllers associated to different Optical Channels are configured with the command.

controller Ots-Och 0/<slot-id>/0/<port-id>/<ch-id>

Parameter	Description
Ots-Och controller Shutdown (OCHs)	Wavelength Blocker will be set to Not Active for the Ots-Och specific slices in the LINE TX direction, to block the channel transmission

Configure the EDFA2 line cards

This section explains the key stages and configurable attributes of EDFA2 line cards used for optical signal amplification in network systems.

You can configure the EDFA2 grid mode, define channel properties, and manually set gain and attenuation parameters for various amplifier stages to achieve desired optical power levels.

The EDFA2 configuration comprises three distinct stages, each performing specific amplification and control functions:

- **Stage 1: Ingress (COM RX Port)** This stage includes the EDFA2 Booster 1 (BST1) amplifier, which operates with a fixed gain. Tasks for this stage involve setting the gain value and configuring the gain range.
- **Stage 2: Egress (LINE Port)** This stage incorporates the wavelength blocker (WB), EDFA2 Booster 2 (BST2) amplifier, and a Variable Optical Attenuator (VOA) on the LINE TX port. Tasks for this stage include setting the gain value, configuring attenuation for WB slices, setting the EDFA2 Egress gain, adjusting TX VOA attenuation, and performing tilt adjustments.
- **Stage 3: Egress (COM TX Port)** This stage is associated with the Pre-amplifier (PRE) and a VOA on the COM TX ports. Tasks for this stage involve setting the gain value, configuring the gain range, and setting VOA attenuation.

Configure the EDFA2 grid mode and ingress amplifier settings

Use this procedure to set up the EDFA2 to operate in flex grid mode with defined channel properties, and to configure the gain range and value for the Ingress EDFA2 (Booster 1 amplifier). These configurations are essential for proper optical signal amplification and management within your network.

Use this task to configure the EDFA2 grid mode and ingress amplifier settings.

Procedure

1. Configure the EDFA2 to operate in flex grid mode and define its channel properties.

   Example

```
RP/0/RP0/CPU0:ios(config)
RP/0/RP0/CPU0:ios(config)#hw-module location 0/slot/NXR0 terminal-ampli
grid-mode flex channel-id <channel_id> centre-freq <frequency_in_MHz> width
<width_in_GHz>
```

```
RP/0/RP0/CPU0:ios(config)#commit
RP/0/RP0/CPU0:ios(config)#end
```

2. Set up the Ingress EDFA2 (Booster 1 amplifier) by configuring its gain range and gain value.

   Example

```
RP/0/RP0/CPU0:ios#config
RP/0/RP0/CPU0:ios(config)#controller Ots0/slot/0/1 ingress-ampli-gain-range
<normal|extended>
RP/0/RP0/CPU0:ios(config)#controller Ots0/slot/0/1 ingress-ampli-gain
<gain_value_in_tenths_of_dB>
RP/0/RP0/CPU0:ios(config)#commit
```

   The EDFA2 is configured for flex grid mode with the specified channel properties, and the Ingress EDFA2 (Booster 1 amplifier) gain range and value are set.

Configure the wavelength blocker for egress EDFA gain and VOA

Use this procedure to configure the wavelength blocker to manage channel attenuation and optimize signal strength for the EDFA2 line card.

The NCS1K14-EDFA2 line card features a Wavelength Blocker (WB), an advanced optical component designed to provide precise and dynamic management of optical signals that selectively attenuates or blocks specific wavelengths within a fiber optic signal, providing dynamic control to manage individual channels in the amplified signal. The wavelength blocker enables the selective attenuation or blocking of specific wavelengths–or channels–within a fiber optic signal.

You can set the gain for the second-stage amplifier (BST2), define attenuation values for individual Wavelength Blocker (WB) slices, and configure the VOA attenuation for the LINE TX port.

The optical spectrum operates within the C-band, spanning a frequency range of 4.975 THz (from 191.200 THz to 196.175 THz). It is divided into individual 6.25 GHz slices, numbered from 0 to 796. Each slice can be assigned a specific attenuation value to customize the channel’s power profile as needed.

In Release 25.1.1, the attenuation for all slices within the channel must be set manually. In later releases, APC can be enabled to automatically manage slice attenuation, eliminating the need for manual configuration. The specific slices involved depend on the channel's center frequency and width. In release 25.1.1, manual channel configuration is required to activate the system.

Use this task to configure the wavelength blocker.

Before you begin

Ensure you know the channel's center frequency and width.

Procedure

---

1. Determine the width and number of slices by dividing the channel width (in GHz) by 6.25; for example, a 150 GHz channel width yields 24 slices (150 / 6.25 = 24), while a 50 GHz channel width yields 8 slices (50 / 6.25 = 8). channel width.
2. Locate the channel slice. The EDFA2 can operate over the C-band with a 4.975 THz frequency range (from 191.200 THz to 196.175 THz) and a 6.25 GHz granularity (where the first slice starts at 191.200 THz), the central slice corresponds to the channel's center frequency and determines its slice range; for example, a 191.375 THz center frequency corresponds to central slice 29, covering slices 17 to 40.

3. Use the command `controller Ots0/slot/0/0 egress-channel-slice` to manually configure the attenuation values for all slices covered by the channel.

   Ensure that the attenuation values align with the desired channel profile.

   Example

```
RP/0/RP0/CPU0:ios#config
RP/0/RP0/CPU0:ios(config)#controller Ots0/slot/0/0 egress-channel-slice
<slice_number> attn
<attenuation_value_in_tenths_of_dB>
RP/0/RP0/CPU0:ios#commit
```

Table 65: Sample of wavelength blocker configurations

If the channel width to be configured is..	Then..

150 GHz
• **Channel center frequency:** 191.375 THz
• **Slices involved:** 24 slices (150 / 6.25)
• **Central slice:**Slice 29
• **Slice range:** From slice 17 to slice 40
	Commands
	`RP/0/RP0/CPU0:ios(config)#hw-module location 0/slot/NXR0 terminal-amplifier grid-mode flex channel-id 1 centre-freq 191.375 width 150`
	`RP/0/RP0/CPU0:ios(config)#controller Ots0/slot/0/0 egress-channel-slice 17 attn <attenuation_value>`
	`RP/0/RP0/CPU0:ios(config)#controller Ots0/slot/0/0 egress-channel-slice 18 attn <attenuation_value>`
	`...`
	`RP/0/RP0/CPU0:ios(config)#controller Ots0/slot/0/0 egress-channel-slice 40 attn <attenuation_value>`
	`RP/0/RP0/CPU0:ios(config)#commit`

If the channel width to be configured is..	Then..

50 GHz
• **Channel center frequency:** 191.375 THz
• **Slices involved:** 8 slices (50 / 6.25)
• **Central slice:** Slice 29
• **Slice range:** From slice 25 to slice 32
	Commands
	`RP/0/RP0/CPU0:ios(config)#hw-module location 0/slot/NXR0 terminal-amplifier-mode flex channel-id 1 centre-freq 191.375 width 50`
	`RP/0/RP0/CPU0:ios(config)#controller Ots0/slot/0/0 egress-channel-slice 25 attn <attenuation_value>`
	`RP/0/RP0/CPU0:ios(config)#controller Ots0/slot/0/0 egress-channel-slice 26 attn <attenuation_value>`
	`RP/0/RP0/CPU0:ios(config)#controller Ots0/slot/0/0 egress-channel-slice 27 attn <attenuation_value>`
	`RP/0/RP0/CPU0:ios(config)#controller Ots0/slot/0/0 egress-channel-slice 28 attn <attenuation_value>`
	`RP/0/RP0/CPU0:ios(config)#controller Ots0/slot/0/0 egress-channel-slice 29 attn <attenuation_value>`
	`RP/0/RP0/CPU0:ios(config)#controller Ots0/slot/0/0 egress-channel-slice 30 attn <attenuation_value>`
	`RP/0/RP0/CPU0:ios(config)#controller Ots0/slot/0/0 egress-channel-slice 31 attn <attenuation_value>`
	`RP/0/RP0/CPU0:ios(config)#controller Ots0/slot/0/0 egress-channel-slice 32 attn <attenuation_value>`
	`RP/0/RP0/CPU0:ios(config)#commit`

Note

- Configure all slices within the channel's range for proper attenuation.
- Ensure alignment between the channel's physical parameters (center frequency and width) and the WB slice configuration.

Configure the pre-amplifier EDFA and VOA

Use this procedure to configure gain range, gain value, and variable optical attenuation (VOA) for the pre-amplifier EDFA between the LINE RX and COM TX ports.

Use this task to configure the pre-amplifier EDFA and VOA.

Procedure

1. Configure the pre-amplifier EDFA gain range, gain value, and VOA attenuation.

Example

```
RP/0/RP0/CPU0:ios(config)
RP/0/RP0/CPU0:ios(config)#controller Ots0/slot/0/1 egress-ampli-gain-range
<normal|extended>
RP/0/RP0/CPU0:ios(config)#controller Ots0/slot/0/1 egress-ampli-gain
<gain_value_in_tenths_of_dB>
RP/0/RP0/CPU0:ios(config)#controller Ots0/slot/0/1 tx-voa-attenuation
<attenuation_value_in_tenths_of_dB>
RP/0/RP0/CPU0:ios(config)#commit
```

2. (Optional) Configure the low threshold for the specified receiver port.

Example

```
RP/0/RP0/CPU0:ios(config)
RP/0/RP0/CPU0:ios(config)#controller Ots0/slot/0/X rx-low-threshold
<threshold_value_in_tenths_of_dBm>
RP/0/RP0/CPU0:ios(config)#commit
```

Verify EDFA2 configuration

Use this procedure to verify EDFA2 amplifier controller parameters for both LINE and COM ports using show commands.

Use this task to verify the EDFA2 configuration.

Procedure

---

1. Verify the ots controller parameters configured on LINE port.

Example

```
 RP/0/RP0/CPU0:ios#sh controllers ots0/0/0/0
Wed Oct  2 16:47:19.278 UTC
  Controller State: Up
  Transport Admin State: In Service
  LED State: Green

         Alarm Status:
         -------------
         Detected Alarms: None

         Alarm Statistics:
         -----------------
         RX-LOS-P = 0
         RX-LOC = 0
         TX-POWER-FAIL-LOW = 0
         INGRESS-AUTO-LASER-SHUT = 0
         INGRESS-AUTO-POW-RED = 0
         INGRESS-AMPLI-GAIN-LOW = 0
         INGRESS-AMPLI-GAIN-HIGH = 0
         EGRESS-AUTO-LASER-SHUT = 0
         EGRESS-AUTO-POW-RED = 0
         EGRESS-AMPLI-GAIN-LOW = 0
```

```
        EGRESS-AMPLI-GAIN-HIGH = 0
        HIGH-TX-BR-PWR = 0
        HIGH-RX-BR-PWR = 0
        SPAN-TOO-SHORT-TX = 0
        SPAN-TOO-SHORT-RX = 0

        Parameter Statistics:
        ---------------------
        Total Rx Power = -4.95 dBm
        Total Tx Power = 1.97 dBm
        Rx Signal Power = -14.19 dBm
        Tx Signal Power = -5.00 dBm
        Tx Voa Attenuation = 10.0 dB

        Egress Ampli Mode = Power
        Egress Ampli Gain = 19.6 dB
        Egress Ampli Tilt = 0.0 dB

        Egress Ampli Safety Control mode = auto
        Egress Ampli OSRI = OFF
        Egress Ampli Force APR = OFF
        Egress Ampli BR Power = -36.90 dBm
        Egress Ampli BR Ratio = -31.90 dB

        Configured Parameters:
        -------------
        Tx Voa Attenuation = 10.0 dB

        Egress Ampli Mode = Gain
        Egress Ampli Gain = 20.0 dB
        Egress Ampli Power = -2.0 dBm
        Egress Ampli Tilt = 0.0 dB

        Egress Ampli Safety Control mode = auto
        Egress Ampli OSRI = OFF
        Egress Ampli Force APR = OFF
        BR High Threshold = -17.0 dBm
```

2. Verify the ots controller parameters configured on the COM port.

Example

```
 RP/0/RP0/CPU0:ios#sh controllers ots0/0/0/1
Wed Oct  2 16:47:25.596 UTC

 Controller State: Up

 Transport Admin State: In Service

 LED State: Green

        Alarm Status:
        -------------
        Detected Alarms: None

        Alarm Statistics:
        -----------------
        RX-LOS-P = 0
```

```
        RX-LOC = 0
        TX-POWER-FAIL-LOW = 0
        INGRESS-AUTO-LASER-SHUT = 0
        INGRESS-AUTO-POW-RED = 0
        INGRESS-AMPLI-GAIN-LOW = 0
        INGRESS-AMPLI-GAIN-HIGH = 0
        EGRESS-AUTO-LASER-SHUT = 0
        EGRESS-AUTO-POW-RED = 0
        EGRESS-AMPLI-GAIN-LOW = 0
        EGRESS-AMPLI-GAIN-HIGH = 0
        HIGH-TX-BR-PWR = 0
        HIGH-RX-BR-PWR = 0
        SPAN-TOO-SHORT-TX = 0
        SPAN-TOO-SHORT-RX = 0

        Parameter Statistics:
        ---------------------
        Total Rx Power = -11.89 dBm
        Total Tx Power = 3.99 dBm


        Tx Voa Attenuation = 1.0 dB
        Ingress Ampli Mode = Gain
        Ingress Ampli Gain = 8.0 dB
        Ingress Ampli Gain Range = Normal
        Egress Ampli Mode = Power
        Egress Ampli Gain = 19.0 dB
        Egress Ampli Tilt = 0.0 dB
        Egress Ampli Gain Range = Normal
        Egress Ampli Safety Control mode = auto
        Egress Ampli OSRI = OFF
        Egress Ampli Force APR = OFF
        Egress Ampli BR Power = -20.20 dBm
        Egress Ampli BR Ratio = -24.20 dB

        Configured Parameters:
        -------------
        Tx Voa Attenuation = 1.0 dB
        Ingress Ampli Gain = 8.0 dB
        Ingress Ampli Gain Range = Normal
        Egress Ampli Mode = Gain
        Egress Ampli Gain = 21.0 dB
        Egress Ampli Power = -5.0 dBm
        Egress Ampli Tilt = 0.0 dB
        Egress Ampli Gain Range = Normal
        Egress Ampli Safety Control mode = auto
        Egress Ampli OSRI = OFF
        Egress Ampli Force APR = OFF
        BR High Threshold = -17.0 dBm
```

Performance monitoring for EDFA2 card

This section explains the performance monitoring parameters and supported counters for EDFA2 cards on optical controllers.

Service providers use performance monitoring (PM) parameters to gather performance data, store it, set thresholds, and report it. This helps with early detection of network issues.

You can configure and retrieve PM counters at intervals of 30 seconds, 15 minutes, or 24 hours. These parameters simplify troubleshooting operations and increase the amount of data that can be collected directly from the equipment.

The tables list the PM counters for the OTS, OTS-OCH, OSC, Optics, CoherentDSP, and OSC optical controllers.

Table 66: PM parameters supported on OTS controller

PM parameter	Description
OPT[dBm]	Total Tx power
OPR[dBm]	Total Rx power
OPT(S)[dBm]	Tx power
OPR(S)[dBm]	Rx power
OPBR[dBm]	Back reflection
OPBRR[dB]	Back Reflection Ratio
EAGN[dB]	Egress Amplifier Gain
EATL[dB]	Egress Amplifier Tilt
IAGN[dB]	Ingress Amplifier Gain
IATL[dB]	Ingress Amplifier Tilt

Table 67: PM parameters supported on OTS-OCH and OSC controllers

PM parameters	Description
OPT[dBm]	Total Tx power
OPR[dBm]	Total Rx power

Table 68: PM parameters supported on optics controller

PM parameter	Description
LBC[%]	Laser Bias Current
OPT[dBm]	Transmit Optical Power
OPR[dBm]	Receive Optical Power
DGD [ps]	Differential Group Delay
SOPMD[ps^2]	Second Order Polarization Mode Dispersion
OSNR[dB]	Optical Signal to Noise Ratio
PDL[dB]	Polarization Dependent Loss
PCR[rad/s]	Polarization Change Rate
RX_SIG[dBm]	Optical Signal Power
FREQ_OFF[MHz]	Frequency Offset
SNR[dB]	Signal to Noise Ratio

Table 69: PM parameters supported on CoherentDSP controller

PM parameter	Description
EC-BITS	Corrected Errored Bits
UC-WORDS	Uncorrected Codewords
PreFEC BER	PreFEC Bit Error Rate
PostFEC BER	PostFEC Bit Error Rate
Q[dB]	Q Factor
Q_Margin[dB]	Q Factor Margin

Table 70: PM parameters supported on OSC optical controller

PM parameters	Description
LBC[%]	Laser Bias Current
OPT[dBm]	Total Tx power
OPR[dBm]	Total Rx power

OSC controller

Use this procedure to configure PRBS testing for client ports on NCS1014 Ethernet controllers to verify signal integrity and performance.

Table 71: Feature History

Feature Name	Release Information	Feature Description
OSC support on EDFA-2 card	Cisco IOS XR Release 25.1.1	The EDFA2 card includes Optical Service Channel (OSC) ports, which enable the creation of a bidirectional communication channel to connect two nodes in a DWDM network. It includes two OSC controllers: one representing the OSC channel towards LINE-TX and the other representing the OSC physical port towards the OSC pluggable. To establish an OSC channel between two nodes, you configure the Gigabit Ethernet interface, which serves as the packet layer for the OSC channel, along with the OSPF protocol on the nodes. The OSC channel is beneficial for: • verifying fiber continuity between two nodes. • enabling remote node management. • discovering network topology. • calculating span loss. CLI commands are: • **controller Osc** *R/S/I/P* **tx-low-threshold** *value* • **controller Osc** *R/S/I/P* **rx-low-threshold** *value* • **controller Osc** *R/S/I/P* **transmit-power** *value* • **controller Osc** *R/S/I/P* **sec-admin-state { maintenance | normal }** • **controller Osc** *R/S/I/P* **shutdown**

An Optical Service Channel (OSC) is a bidirectional communication channel that connects two nodes within a DWDM network. The OSC controller is responsible for representing the optical capabilities, configuration, and monitoring of the OSC laser. Its associated Gigabit Ethernet interface acts as the packet layer of an OSC channel representing Ethernet capabilities, configuration, and monitoring.

Functions of OSC

Key functions of the OSC include:

- Providing a communication channel for traffic originating from a UDC port.

- Acting as a channel probe to verify fiber continuity between two nodes.
- Enabling remote node management.
- Discovering topology
- Calculating span loss

Operation frequency

The OSC is generated and terminated on each line side, operating at a frequency of 198.50 THz.

OSC controllers in EDFA2 card

The EDFA2 card has two OSC ports. The OSC controllers associated with the OSC optical port on the NCS1K14-EDFA2 line card are denoted as follows:

- `controller osc 0/<slot-id>/0/0` : This represents the OSC channel towards LINE-TX.
- `controller osc 0/<slot-id>/0/4` : This represents the OSC physical port towards the OSC pluggable.

Establish OSC link between two nodes

Use this procedure to configure the steps to establish OSC connectivity between two nodes using controller, interface, and OSPF settings.

Use this task to bring up OSC link between two nodes.

Procedure

1. Configure the OSC controllers on ports 0 and 4.
   a) Use the controller OSC command to configure the OSC controllers on port 0 and 4.

      Example:

      Node 1:

```
RP/0/RP0/CPU0:ios#config t
RP/0/RP0/CPU0:ios(config)#controller Osc 0/3/0/0
RP/0/RP0/CPU0:ios(config-Osc)#description osc_line_tx_ne
RP/0/RP0/CPU0:ios(config-Osc)#commit
RP/0/RP0/CPU0:ios(config-Osc)#exit
RP/0/RP0/CPU0:ios(config)#controller osc 0/3/0/4
RP/0/RP0/CPU0:ios(config-Osc)#description osc_phy_ne
RP/0/RP0/CPU0:ios(config-Osc)#no shutdown
RP/0/RP0/CPU0:ios(config-Osc)#exit
```

      Node 2:

```
RP/0/RP0/CPU0:ios#config t
RP/0/RP0/CPU0:ios(config)#controller Osc 0/1/0/0
RP/0/RP0/CPU0:ios(config-Osc)#description osc_line_tx_fe
RP/0/RP0/CPU0:ios(config-Osc)#commit
RP/0/RP0/CPU0:ios(config-Osc)#exit
RP/0/RP0/CPU0:ios(config)#controller osc 0/1/0/4
RP/0/RP0/CPU0:ios(config-Osc)#description osc_phy_ne
RP/0/RP0/CPU0:ios(config-Osc)#no shutdown
RP/0/RP0/CPU0:ios(config-Osc)#commit
RP/0/RP0/CPU0:ios(config-Osc)#exit
```

2. Configure the interfaces.
   a) Use the interface Gigabitethernet command to configure the Gigabit Ethernet interface for the OSC link.

      Example:

      Node 1:

```
RP/0/RP0/CPU0:ios#config t
RP/0/RP0/CPU0:ios(config)#interface GigabitEthernet 0/3/0/5
RP/0/RP0/CPU0:ios(config-if)#description osc_ge_ne
RP/0/RP0/CPU0:ios(config-if)#ipv4 address 192.0.2.1 255.255.255.0
RP/0/RP0/CPU0:ios(config-if)#no shutdown
RP/0/RP0/CPU0:ios(config-if)#exit
```

      Node 2:

```
RP/0/RP0/CPU0:ios#config t
RP/0/RP0/CPU0:ios(config)#interface GigabitEthernet0/1/0/5
RP/0/RP0/CPU0:iso(config-if)#description osc_ge_fe
RP/0/RP0/CPU0:iso(config-if)#ipv4 address 192.0.2.20 255.255.255.0
RP/0/RP0/CPU0:iso(config-if)#no shutdown
RP/0/RP0/CPU0:iso(config-if)#commit
RP/0/RP0/CPU0:ios(config-if)#exit
```

3. Configure the OSPF process:
   a) Use the **router ospf** *process-name* to enable OSPF routing.
   b) Use the **distribute link-state** keyword to distribute OSPF link-state data.
   c) Use the **segment-routing mpls** keyword to enable MPLS-based segment routing for the OSPF process.

      This step is optional.

   d) Use the **redistribute connected** keyword to advertise directly connected networks into OSPF
   e) Use the **network point-to-point** keyword to configure an interface OSPF network type to point-to-point.
   f) Use the **area** keyword to configure an OSPF area.

   Example:

   Node 1 and 2:

```
RP/0/RP0/CPU0:iso(config)#router ospf 1
RP/0/RP0/CPU0:iso(config-ospf)#distribute link-state
RP/0/RP0/CPU0:iso(config-ospf)#segment-routing mpls
RP/0/RP0/CPU0:iso(config-ospf)#network point-to-point
RP/0/RP0/CPU0:iso(config-ospf)#redistribute connected
RP/0/RP0/CPU0:iso(config-ospf)#area 0
```

4. Add the configured interfaces to the OSPF area.

   Example:

   Node 1:

```
RP/0/RP0/CPU0:ios(config-ospf-ar)#interface GigabitEthernet0/3/0/5
RP/0/RP0/CPU0:iso(config-ospf-ar)#no shutdown
```

   Node 2:

```
RP/0/RP0/CPU0:ios(config-ospf-ar)#interface GigabitEthernet0/1/0/5
RP/0/RP0/CPU0:iso(config-ospf-ar)#no shutdown
```

5. Exit the OSPF area configuration mode and commit your configuration.

   Example:

   Node 1 and 2:

```
RP/0/RP0/CPU0:ios(config-ospf-ar-if)#exit
RP/0/RP0/CPU0:ios(config-ospf-ar)#exit
RP/0/(config-ospf)#exit
RP/0/RP0/CPU0:ios(config)#commit
RP/0/RP0/CPU0:ios(config)#exit
```

6. Verify OSC IP connectivity from both ends.

   Example:

   Node 1:

```
RP/0/RP0/CPU0:ios#ping 192.0.2.20
Type escape sequence to abort.
Sending 5, 100-byte ICMP Echos to 192.0.2.20 timeout is 2 seconds:
!!!!!
Success rate is 100 percent (5/5), round-trip min/avg/max = 1/2/4 ms
```

   Node 2:

```
RP/0/RP0/CPU0:ios#ping 192.0.2.1
Mon Feb 17 15:11:29.433 IST
Type escape sequence to abort.
Sending 5, 100-byte ICMP Echos to 192.0.2.1 timeout is 2 seconds:
!!!!!
Success rate is 100 percent (5/5), round-trip min/avg/max = 1/2/4 ms
```

Configure OSC controller parameters

Use this procedure to configure specific parameters for OSC controllers to manage transmit and receive power, administrative state, and thresholds on the NCS1K14-EDFA2 line card.

There are multiple parameters for the OSC controllers. You can configure the parameters that are required for the different configuration for an OSC controller on the NCS1K14-EDFA2 line card.

The parameters are:

- transmit-power
- sec-admin-state
- tx-low-threshold
- rx-low-threshold
- shutdown

Use this task to configure the OSC parameters:

Procedure

Use the **controller osc** *R/S/I/P* command to configure the OSC controller.

a) Use the **transmit-power** *<value>* keyword to specify the transmit-power value.

Example:

Line side OSC port:

```
RP/0/RP0/CPU0:ios#config
RP/0/RP0/CPU0:ios(config)#controller osc 0/3/0/0
RP/0/RP0/CPU0:ios(config-Osc)#transmit-power 20
Wed Feb 12 13:01:19.298 IST
WARNING! Changing TX power can impact traffic
RP/0/RP0/CPU0:ios(config-Osc)#commit
```

Pluggable side OSC port:

```
RP/0/RP0/CPU0:ios#config
RP/0/RP0/CPU0:ios(config)#controller osc 0/3/0/4
RP/0/RP0/CPU0:ios(config-Osc)#transmit-power -100
Wed Feb 12 13:02:16.123 IST
WARNING! Changing TX power can impact traffic
RP/0/RP0/CPU0:ios(config-Osc)#commit
```

Note

To ensure the protection of the OSC pluggable receiver, regardless of the configured transmit power on the OSC controller located at 0/slot-id/0/4, the maximum transmit power will be limited to -9 dBm.

b) Use the **sec-admin-state { maintenance | normal }** keyword to configure the administrative state of the controller as maintenance or normal.

Example:

Line side OSC port:

```
RP/0/RP0/CPU0:ios#config
RP/0/RP0/CPU0:ios(config)#controller osc 0/3/0/0
RP/0/RP0/CPU0:ios(config-Osc)#sec-admin-state normal
RP/0/RP0/CPU0:ios(config-Osc)#commit
```

Pluggable side OSC port:

```
RP/0/RP0/CPU0:ios#config
RP/0/RP0/CPU0:ios(config)#controller osc 0/3/0/4
RP/0/RP0/CPU0:ios(config-Osc)#sec-admin-state normal
RP/0/RP0/CPU0:ios(config-Osc)#commit
```

c) Use the **tx-low-threshold** *<value>* keyword to specify the low transmit power threshold value.

Example:

Line side OSC port:

```
RP/0/RP0/CPU0:ios#config
RP/0/RP0/CPU0:ios(config)#controller osc 0/3/0/0
RP/0/RP0/CPU0:ios(config-osc)#tx-low-threshold 20
RP/0/RP0/CPU0:ios(config)#commit
```

Pluggable side OSC port:

```
RP/0/RP0/CPU0:ios#config
RP/0/RP0/CPU0:ios(config)#controller osc 0/3/0/4
RP/0/RP0/CPU0:ios(config-osc)#tx-low-threshold 20
RP/0/RP0/CPU0:ios(config)#commit
```

d) Use the **rx-low-threshold** *<value>* keyword to specify the low receive power threshold value.

Example:

Line side OSC port:

```
RP/0/RP0/CPU0:ios#config
RP/0/RP0/CPU0:ios(config)#controller osc 0/3/0/0
RP/0/RP0/CPU0:ios(config-osc)#rx-low-threshold 50
RP/0/RP0/CPU0:ios(config)#commit
```

Pluggable side OSC port:

```
RP/0/RP0/CPU0:ios#config
RP/0/RP0/CPU0:ios(config)#controller osc 0/3/0/4
RP/0/RP0/CPU0:ios(config-osc)#rx-low-threshold 50
RP/0/RP0/CPU0:ios(config)#commit
```

e) If you want to disable the configuration of the controller, use the **shutdown** keyword.

Example:

Line side OSC port:

```
RP/0/RP0/CPU0:ios#config
RP/0/RP0/CPU0:ios(config)#controller osc 0/3/0/0 shutdown
RP/0/RP0/CPU0:ios(config)#commit
```

Pluggable side OSC port:

```
RP/0/RP0/CPU0:ios#config
RP/0/RP0/CPU0:ios(config)#controller osc 0/3/0/4 shutdown
RP/0/RP0/CPU0:ios(config)#commit
```

Verify OSC controller configurations

Us e this procedure to verify various OSC controller configurations to confirm proper status and operation of the NCS1K14-EDFA2 line card and associated ports.

Use these steps to verify various OSC controller configurations:

Procedure

---

1. Use the **show platform** command to display node information for the NCS1K14-EDFA2 line card.

   Example:

```
RP/0/RP0/CPU0:ios#show platform
Wed Feb 12 12:58:00.592 IST
Node              Type                      State                   Config
state
```

```
-----------------------------------------------------------------------------
0/RP0/CPU0       NCS1K14-CNTLR-K9(Active) IOS XR RUN             NSHUT,NMON
0/PM0            NCS1K4-AC-PSU-2          OPERATIONAL            NSHUT,NMON
0/PM1            NCS1K4-AC-PSU-2          OPERATIONAL            NSHUT,NMON
0/FT0            NCS1K14-FAN              OPERATIONAL            NSHUT,NMON
0/FT1            NCS1K14-FAN              OPERATIONAL            NSHUT,NMON
0/FT2            NCS1K14-FAN              OPERATIONAL            NSHUT,NMON
0/0/NXR0         NCS1K14-BLANK            PRESENT                NSHUT,NMON
0/1/NXR0         NCS1K4-1.2T-K9           OPERATIONAL            NSHUT,NMON
0/2/NXR0         NCS1K14-BLANK            PRESENT                NSHUT,NMON
0/3/NXR0         NCS1K14-EDFA2            OPERATIONAL            NSHUT,NMON
0/4              NCS1K-MD-32O-CE          OPERATIONAL            NSHUT,NMON
0/5              NCS1K-MD-32E-CE          OPERATIONAL            NSHUT,NMON
```

2. Use the **show inventory** command to retrieve and display the physical inventory information of the NCS1K14-EDFA2 line card.

   Example:

```
RP/0/RP0/CPU0:ios#sh inventory location 0/3/NXR0
Wed Feb 12 12:58:08.589 IST

NAME: "0/3/NXR0", DESCR: "NCS 1014 EDFA terminal with equalization"
PID: NCS1K14-EDFA2     , VID: V00, SN: FCB2831B1NY

NAME: "Optics0/3/0/5", DESCR: "Cisco SFP GE 1510 OSC Pluggable Optics Module"
PID: ONS-SC-PTP-1510   , VID: V01, SN: MZH2719009Z

NAME: "Optics0/3/0/6", DESCR: "Cisco QSFP DD Pluggable Optical Time Domain
Reflectometer"
PID: ONS-QSFP-OTDR     , VID: V00 , SN: IIF2814001B

NAME: "Optics0/3/0/7", DESCR: "Cisco QSFP DD ZT5 Pluggable Optics Module"
PID: DP01QSDD-ZT5-A1   , VID: V01 , SN: ACA282500L4
```

3. Use the **show controllers description** command to view the status of the OSC ports.

   Example:

```
RP/0/RP0/CPU0:ios#show controllers description | In Osc
Wed Feb 12 12:59:02.294 IST
Osc0/3/0/0                  up
Osc0/3/0/4                  up
```

4. Use the **show controllers osc** *R/S/I/P* command to display the status and configuration information of the OSC controllers on the NCS1K14-EDFA2 card.

   Example:

```
sh controllers osc 0/3/0/0
Wed Feb 12 13:01:44.325 IST

 Controller State: Up
 Transport Admin State: In Service
 Laser State: On

 Last link flapped: 00:22:04

  Alarm Status:
```

```
  -------------
  Detected Alarms: None

  Alarm Statistics:
  -----------------
  RX-LOS-P = 0
  TX-POWER-FAIL-LOW = 0

  Parameter Statistics:
  ---------------------
  Total Tx Power = 2.05 dBm
  Total Rx Power = -21.24 dBm
  OSNR = 42.40 dB

  Configured Parameters:
  -------------
```

5. Use the command **show interfaces gigabitEthernet** *R/S/I/P* to view the parameters of the Gigabit Ethernet interface associated with the OSC channel.

   Example:

```
RP/0/RP0/CPU0:ios#sh interfaces gigabitEthernet 0/3/0/5
Wed Feb 12 13:05:29.153 IST
GigabitEthernet0/3/0/5 is up, line protocol is up
  Interface state transitions: 1
  Hardware is GigabitEthernet, address is c4ab.4d1b.9380 (bia c4ab.4d1b.9380)

  Description: osc_ge_ne
  Internet address is 192.0.2.1/24
  MTU 1514 bytes, BW 1000000 Kbit (Max: 1000000 Kbit)
     reliability 255/255, txload 0/255, rxload 0/255
  Encapsulation ARPA,
  Full-duplex, 1000Mb/s, unknown, link type is force-up
  output flow control is off, input flow control is off
  loopback not set,
  Last link flapped 00:25:49
  ARP type ARPA, ARP timeout 04:00:00
  Last input Unknown, output Unknown
  Last clearing of "show interface" counters Unknown
  5 minute input rate 0 bits/sec, 0 packets/sec
  5 minute output rate 0 bits/sec, 0 packets/sec
```

6. Use the command **show ipv4 interface brief** to view the IPv4 address of a Gigabit Ethernet interface.

   Example:

```
show ipv4 interface brief
Wed Feb 12 13:05:41.784 IST

Interface                      IP-Address      Status          Protocol
Vrf-Name
GigabitEthernet0/3/0/5         192.0.2.1         Up              Up
default
MgmtEth0/RP0/CPU0/0            209.165.201.3     Up              Up
default
PTP0/RP0/CPU0/0                unassigned        Shutdown        Down
default
MgmtEth0/RP0/CPU0/1            10.127.126.176    Up              Up
default
```

The Gigabit Ethernet interface must be in Up state for the OSC laser to turn up. When the node comes up, the Gigabit Ethernet interface turns to Down state. Run these commands on the Gigabit Ethernet interface to bring it up.

```
RP/0/RP0/CPU0:ios#config
RP/0/RP0/CPU0:ios(config)#no interface gigabitEthernet 0/3/0/5  shutdown
RP/0/RP0/CPU0:ios(config)#commit
```

7. Use the commands **show controllers switch summary** and **show controllers switch statistics** to view the status OSC ports in the NCS1K14-EDFA2 line card.

   Example:

```
RP/0/RP0/CPU0:ios#show controllers switch summary
Wed Feb 12 13:06:07.130 IST

Rack  Card  Switch   Rack Serial Number
-------------------------------------------
  0   RP0   RP-SW    FCB2814B1HL

         Phys      Admin      Port          Protocol    Forward
Port     State     State      Speed         State       State       Connects
 To
-------------------------------------------------------------------------------

 0          Up       Up     10-Gbps            -      Forwarding     CPU0
 1          Up       Up     10-Gbps            -      Forwarding     CPU1
 2          Up       Up      1-Gbps            -      Forwarding     PTP1
 3          Up       Up      1-Gbps            -      Forwarding     MGMT0
 4          Up       Up      1-Gbps            -      Forwarding     MGMT1
 5          Up       Up      1-Gbps            -      Forwarding     LC3_0
 6        Down       Up      1-Gbps            -      Forwarding     PTP0
 7        Down       Up      1-Gbps            -      Forwarding     LC3_1
 8        Down       Up      1-Gbps            -      Forwarding     LC0_0
 9        Down     Down      1-Gbps            -      Forwarding     PENNY
10        Down       Up      1-Gbps            -      Forwarding     LC2_1
11        Down       Up      1-Gbps            -      Forwarding     LC2_0
12          Up       Up      1-Gbps            -      Forwarding     LC1_0
13        Down       Up      1-Gbps            -      Forwarding     LC0_1
14          Up       Up      1-Gbps            -      Forwarding     LC1_1
15        Down     Down     10-Mbps            -      Forwarding     UnUsed
16        Down       Up      1-Gbps            -      Forwarding     LC0_OSC0
17        Down       Up      1-Gbps            -      Forwarding     LC0_OSC1
18        Down     Down      1-Gbps            -      Forwarding     LC0-OSC2
19        Down     Down      1-Gbps            -      Forwarding     LC0-OSC3
20        Down       Up      1-Gbps            -      Forwarding     LC1_OSC0
21        Down       Up      1-Gbps            -      Forwarding     LC1-OSC1
22        Down     Down      1-Gbps            -      Forwarding     LC1-OSC2
23        Down     Down      1-Gbps            -      Forwarding     LC1-OSC3
24        Down       Up      1-Gbps            -      Forwarding     LC2_OSC0
25        Down       Up      1-Gbps            -      Forwarding     LC2_OSC1
26        Down     Down      1-Gbps            -      Forwarding     LC2_OSC2
27        Down     Down      1-Gbps            -      Forwarding     LC2_OSC3
28          Up       Up      1-Gbps            -      Forwarding     LC3_OSC0
29          Up       Up      1-Gbps            -      Forwarding     LC3_OSC1
30          Up     Down      1-Gbps            -      Forwarding     LC3_OSC2
31          Up     Down      1-Gbps            -      Forwarding     LC3_OSC3
```

```
RP/0/RP0/CPU0:ios#show controllers switch statistics
Wed Feb 12 13:06:38.410 IST

Rack  Card  Switch   Rack Serial Number
```

```
-----------------------------------------
  0   RP0   RP-SW    FCB2814B1HL

                                                                    Tx
    Rx
          Phys      State          Tx             Rx             Drops/
    Drops/
Port      State     Changes        Packets        Packets        Errors
    Errors        Connects To
 0          Up            1         559115         731932             0
         0        CPU0
 1          Up            1           2032           3495             0
         0        CPU1
 2          Up            4      1212451356      1352379301             0
           0        PTP1
 3          Up            2         138666         142720             0
         0        MGMT0
 4          Up            2         259633         124134             0
         0        MGMT1
 5          Up           12         219828         176664             0
         0        LC3_0
 6        Down            0              0              0             0
         0        PTP0
 7        Down            0              0              0             0
         0        LC3_1
 8        Down            0              0              0             0
         0        LC0_0
 9        Down            0              0              0             0
         0        PENNY
10        Down            0              0              0             0
         0        LC2_1
11        Down            0              0              0             0
         0        LC2_0
12          Up            0         113660         116246             0
         0        LC1_0
13        Down            0              0              0             0
         0        LC0_1
14          Up            0              0              0             0
         0        LC1_1
15        Down            0              0              0             0
         0        UnUsed
16        Down            0              0              0             0
         0        LC0_OSC0
17        Down            0              0              0             0
         0        LC0_OSC1
18        Down            0              0              0             0
         0        LC0-OSC2
19        Down            0              0              0             0
         0        LC0-OSC3
20        Down            0              0              0             0
         0        LC1_OSC0
21        Down            0              0              0             0
         0        LC1-OSC1
22        Down            0              0              0             0
         0        LC1-OSC2
23        Down            0              0              0             0
         0        LC1-OSC3
24        Down            0              0              0             0
         0        LC2_OSC0
25        Down            0              0              0             0
         0        LC2_OSC1
26        Down            0              0              0             0
```

```
         0        LC2_OSC2
27        Down           0              0              0             0
         0        LC2_OSC3
28          Up           6              0              0             0
         0        LC3_OSC0
29          Up           6     1264648150     1212466505             0
         3        LC3_OSC1
30          Up           6              0              0             0
         0        LC3_OSC2
31          Up           6              0              0             0
         0        LC3_OSC3
```

8. Use the **show controllers optics** *R/S/I/P* command to display status and configuration information about the OSC optics controller.

   Example:

```
RP/0/RP0/CPU0:ios#sh controllers optics 0/3/0/5
Wed Feb 12 13:06:56.528 IST

 Controller State: Up

 Transport Admin State: In Service

 Laser State: On

 LED State: Green

 Last link flapped: 00:27:16

 Optics Status

  Optics Type:  1G SFP DWDM

  Alarm Status:
  -------------
  Detected Alarms: None


  LOS/LOL/Fault Status:

  Alarm Statistics:

  -------------
  HIGH-RX-PWR = 0            LOW-RX-PWR = 0
  HIGH-TX-PWR = 0            LOW-TX-PWR = 0
  HIGH-LBC = 0               HIGH-DGD = 0
  OOR-CD = 0               OSNR = 0
  WVL-OOL = 0               MEA  = 0
  IMPROPER-REM = 0
  TX-POWER-PROV-MISMATCH = 0
  Laser Bias Current = 53.1 %
  Actual TX Power = 4.63 dBm
  RX Power = -23.76 dBm
  Frequency Offset = 0 MHz

  Performance Monitoring: Enable

  THRESHOLD VALUES
  ----------------
```

```
 Parameter                 High Alarm  Low Alarm  High Warning  Low Warning

 ------------------------  ----------  ---------  ------------  -----------

 Rx Power Threshold(dBm)          5.0      -30.0           0.0          0.0

 Tx Power Threshold(dBm)          8.0        0.0           0.0          0.0

 LBC Threshold(mA)                N/A        N/A          0.00         0.00


 LBC High Threshold = 98 %
 Polarization parameters not supported by optics

Transceiver Vendor Details

 Form Factor   : SFP
 Name    : CISCO-MOLEX
 Part Number   : 10-3548-01
 Rev Number   : 000
 Serial Number   : MZH2719009Z
 PID    : ONS-SC-PTP-1510
 VID    : V01
 Firmware Version       : Major.Minor.Build
 Active                 : .0
 Inactive               : .0
 Date Code(yy/mm/dd)  : 23/05/30
 Fiber Connector Type: LC
 Otn Application Code: Not Set
 Sonet Application Code: Not Set
 Ethernet Compliance Code: Not set

Transceiver Temperature : 28 Celsius



AINS Soak                : None
AINS Timer               : 0h, 0m
AINS remaining time      : 0 seconds
```

UDC OSC connection

This section explains the concept of UDC OSC connections, how they enable UDC traffic to be carried over OSC channels, and the use of ports on the EDFA2 card and NCS 1014 chassis.

The OSC channel carries both UDC and OSC traffic. The EDFA2 card has a single OSC port that supports one OSC channel at a time. To carry UDC traffic over OSC channel, attach a UDC port to a specific OSC port on the EDFA2 card by using a CLI command.

The NCS 1014 chassis does not have dedicated UDC ports but includes two PTP ports. You can convert these PTP ports into UDC ports and connect them to the OSC channel using a CLI command. See Convert PTP ports to UDC ports on page 298.

> **Note**
>
> The NCS 1014 chassis has only two PTP ports, you can connect maximum 2 ports on two EDFA2 cards.

Convert PTP ports to UDC ports

Use this procedure to configure the NCS 1014 controller to convert selected PTP ports into UDC ports and associate them with specific Ethernet interfaces.

Follow this step to convert the PTP ports available in the NCS 1014 controller into UDC ports and attach them to the Ethernet port corresponding to the OSC channel.

Procedure

1. Enter the command **hw-module location** to convert the PTP ports to UDC ports and attach them to the GigabitEthernet interface of the OSC.

   Example

   The output shows the conversoin of two PTP ports into UDC ports.

```
RP/0/RP0/CPU0:ios(config)#hw-module location 0/RP0/CPU0 ptp 0 port-mode udc
attach interface GigabitEthernet 0/0/0/5
```

```
RP/0/RP0/CPU0:ios(config)#hw-module location 0/RP0/CPU0 ptp 1 port-mode udc
attach interface GigabitEthernet 0/1/0/5
```

2. Enter the command **show controllers switch summary** to verify the UDC ports information. After converting the PTP ports to UDC, check the link ports 2 and 6 for UDC information.

   Example

```
RP/0/RP0/CPU0:ios#show controllers switch summary
Sat Mar 27 19:05:14.646 UTC

Rack  Card  Switch   Rack Serial Number
-----------------------------------------
  0   RP0   RP-SW    FCB2721B2VW

         Phys      Admin      Port          Protocol    Forward
Port     State     State      Speed         State       State       Connects
 To
-------------------------------------------------------------------------------

 0          Up       Up     10-Gbps            -      Forwarding     CPU0
 1          Up       Up     10-Gbps            -      Forwarding     CPU1
 2        Down       Up      1-Gbps            -      Forwarding     PTP1
 3          Up       Up      1-Gbps            -      Forwarding     MGMT0
 4        Down       Up      1-Gbps            -      Forwarding     MGMT1
 5          Up       Up      1-Gbps            -      Forwarding     LC3_0
 6        Down       Up      1-Gbps            -      Forwarding     PTP0
 7          Up       Up      1-Gbps            -      Forwarding     LC3_1
 8          Up       Up      1-Gbps            -      Forwarding     LC0_0
 9        Down     Down      1-Gbps            -      Forwarding     PENNY
```

```
10        Down       Up      1-Gbps            -      Forwarding     LC2_1
.
.
output snipped
.
.
30        Down     Down     10-Mbps            -      Forwarding     UnUsed
31        Down     Down     10-Mbps            -      Forwarding     UnUsed
```

3. Enter the command **show controllers switch statistics** to verify the UDC ports information on ports 2 and 6.

Example

```
RP/0/RP0/CPU0:ios#show controllers switch statistics detail location 0/RP0/CPU0
 port 2
Sat Mar 27 19:14:14.621 UTC

                            Phys      Port
Rack   Card    Switch      Port      State      Speed       Connects To
-----------------------------------------------------------------------
0      RP0     RP-SW        2         Down       1-Gbps      PTP1

Rx Unicast Packets:      0
Rx Multicast Packets:    0
Rx Broadcast Packets:    0
Rx Flow Control:         0
Rx Good Octets:          0
Rx Bad Octets:           0
Rx FIFO Overrun:         0
Rx Undersize:            0
Rx Fragments:            0
Rx Oversize:             0
Rx Jabber:               0
Rx Errors:               0
Rx Bad CRC:              0
Rx Collisions:           0
Rx Policing Drops:       0
Tx Unicast Packets:      0
Tx Multicast Packets:    0
Tx Broadcast Packets:    0
Tx Flow Control:         0
Tx Good Octets:          0
Tx Deferred Packets:     0
Tx FIFO Underrun/CRC:    0
Tx Multiple Collisions:  0
Tx Excess Collisions:    0
Tx Late Collisions:      0
Tx Policing Drops:       0
Tx Queueing Drops:       0
RxTx Packets 64:         0
RxTx Packets 65-127:     0
RxTx Packets 128-255:    0
RxTx Packets 256-511:    0
RxTx Packets 512-1023:   0
RxTx Packets 1024-Max:   0
```

4. (Optional) Use the **clear controller switch statistics location** to reset the statistics information.
   a) Check for the applicable locations for controller statistics.

Example

```
RP/0/RP0/CPU0:ios#clear controller switch statistics location ?
  0/0/NXR0    Fully qualified location specification
  0/1/NXR0    Fully qualified location specification
  0/2/NXR0    Fully qualified location specification
  0/3/NXR0    Fully qualified location specification
  0/RP0/CPU0  Fully qualified location specification
  WORD        Fully qualified location specification
```

b) Use the controller location, 0/RP0/CPU0, to clear the switch statistics information for the UDC ports.

Example

```
RP/0/RP0/CPU0:ios#clear controller switch statistics location 0/RP0/CPU0
Mon Jul 21 13:26:31.913 IST

Clear switch statistics ? [yes,no]

Invalid option (edited)
```

How OSC UDC connection works

This section describes how the OSC UDC connection operates between NCS 1014 nodes, including the key actors, packet transmission modes, and traffic behavior during events.

The process involves these stages:

- After you convert the PTP ports to UDC ports using CLI configuration, the NCS 1014 maps each UDC port to its OSC channel and sends packets from each UDC port through its channel.
- The packets received on the CPU-OSC interface will be transmitted as "untagged" over the OSC channel, whereas UDC packets will be transmitted as "tagged".
- When two OSC ports are directly connected between nodes, the NCS 1014 uses the same tagging method for both sent and received packets.

Note

Traffic will be interrupted during a controller cold reset or during a software upgrade when the controller undergoes a cold reset due to a BIOS or any other FPD upgrade. UDC traffic is not impacted during a controller warm reset.

NCS1K-MD-32x-CE mux and demux passive patch panels

This section explains the key features, functions, and limitations of the NCS1K-MD-32x-CE mux and demux passive patch panels used in optical line systems.

Table 72: Feature History

Feature Name	Release Information	Feature Description
NCS1K-MD-32x-CE Mux/Demux passive patch panels support	Cisco IOS XR Release 25.1.1	NCS1K-MD-32O-CE and NCS1K-MD-32E-CE patch panels are a pair of mux/demux passive Athermal Arrayed Waveguide Grating (AAWG) modules designed for odd and even channels, operating in the C-band. The NCS1K-MD-32x-CE module connects to the controller card through a USB 2.0 channel and interfaces with the EDFA2 line card via fiber optics. The patch panel helps to retrieve inventory data, insertion loss of the optical paths, and the optical power levels monitored by the patch panels' photodiodes.

Features

- The MD32x-CE patch panels communicate to the optical line system using a USB communication channel. The dedicted USB 2.0 port in patch panels connect to the controllers to communicate.
- Embedded optical coupler optical splitter.
- The interoperability function with a EDFA2 line card aggregate signals from transponders.
- Seperate port for coherent probe support.
- USB 2.0 for inventory, PD reading, and LED control.
- RX and TX ports for OCH and OMS contoller channels.
- FPD upgrade support.

Limitations

- Loopback is not supported.
- Passive line card reload not supported.

Performance monitoring for NCS1K-MD-32x-CE

Service providers use performance monitoring (PM) parameters to gather performance data, store it, set thresholds, and report it. This helps with early detection of network issues.

You can configure and retrieve PM counters at intervals of 30 seconds, 15 minutes, or 24 hours. These parameters simplify troubleshooting operations and increase the amount of data that can be collected directly from the equipment.

You can view and configure the performance monitoring parameters for optics on OCH and OMS controllers.

The table list the PM counters for the OCH and OMS controllers.

Table 73: PM parameters supported on OCH and OMS controllers

PM parameter	Description
OPT[dBm]	Total Tx power
OPR[dBm]	Total Rx power

Configure PM parameters for NCS1K-MD-32x-CE

Use this prodecure to configure performance monitoring parameters for the optics layer on OCH controllers of NCS1K-MD-32x-CE devices.

Use this task to view and configure the performance monitoring parameters for optics on OCH controllers.

Procedure

Run the **show controllers** command for optics.

Example

```
RP/0/RP0/CPU0:RINode1#show controllers och 0/5/0/8 pm current 30-sec ?
  optics  show optics pm data in 30-sec interval
RP/0/RP0/CPU0:RINode1#configur
Fri Feb 28 10:46:33.475 IST
RP/0/RP0/CPU0:RINode1(config)#control
control-plane  controller
RP/0/RP0/CPU0:RINode1(config)#controller och 0/5/0/8 pm ?
  15-min   Configure pm parameters of 15 minute interval
  24-hour  Configure pm parameters of 24 hour interval
  30-sec   Configure pm parameters of 30 second interval
RP/0/RP0/CPU0:RINode1(config)#controller och 0/5/0/8 pm 30-sec ?
  optics  Configure och optics layer performance monitoring
```

10 Configure Coherent Probe

Topics:

- Coherent probe on EDFA2 card
- Supported pluggables for the EDFA2 card coherent probe port
- Configure coherent probe on the EDFA2 card
- Configure PRBS on EDFA2 card

This section lists the supported DP04QSDD-E26-A1 and DP01QSDD-ZT5-A1 pluggables with coherent probe functionality, and provides release and feature descriptions.

Table 74: Feature History

Feature Name	Release Information	Description
DP04QSDD-E26-A1 support	Cisco IOS XR Release 25.4.1	The DP04QSDD-E26-A1 pluggable supports 400G ZR coherent probe functionality on the NCS1K14-EDFA2 card. The pluggable is tunable across C band frequency range and serves as a transponder performing probe functionality. The coherent probe provides link tests before provisioning an active service on the Optical fiber. Additionally, this pluggable allows PRBS monitoring on trunk ports without the need to enable maintenance mode.
DP01QSDD-ZT5-A1 support	Cisco IOS XR Release 25.1.1	The DP01QSDD-ZT5-A1 QDD pluggable is a coherent probe supported for the EDFA2 card. This pluggable supports C-band with tunable frequency. You can plug the coherent probe pluggable to establish a link for the first time in DWDM.

Coherent probe on EDFA2 card

This section explains how coherent probes function as link probes and are supported on EDFA2 cards across all C-band channels.

The DP01QSDD-ZT5-A1 and DP04QSDD-E26-A1 QDD, a coherent probe that is QSFP-DD MSA-compliant and supported on the EDFA2 card, can be used as a link probe and supports all the C-band channels.

The coherent probe on the NCS1K14-EDFA2 card is provided as optics port 7.

Supported pluggables for the EDFA2 card coherent probe port

This section lists and compares the features of DP01QSDD-ZT5-A1 and DP04QSDD-E26-A1 pluggable transceivers supported on the EDFA2 card's coherent probe port.

The EDFA2 card supports QSFP-DD pluggable transceivers that generate tunable C-band frequencies. To establish an optical link for the first time, connect the pluggable to the coherent probe port.

DP01QSDD-ZT5-A1 pluggable features:

- Supports tunable C-band frequency
- Features a CoherentDSP controller on optics port 7
- Operates in ZR trunk mode only
- Provides a 100 Gigabit trunk rate
- Utilizes OFEC as the only supported Forward Error Correction (FEC)
- Enables PRBS support for CoherentDSP

DP04QSDD-E26-A1 pluggable features:

- Supports tunable C-band frequency
- Features a CoherentDSP controller on optics port 7
- Operates in ZR trunk mode only
- Provides a 400 Gigabit trunk rate
- Utilizes CFEC as the only supported Forward Error Correction (FEC)
- Enables PRBS support for CoherentDSP

Configure coherent probe on the EDFA2 card

Use this procedure to configure the coherent probe, trunk rate, and trunk mode for the EDFA2 card, and verify your configuration.

Note

The **MEA** alarm is raised if the DP01QSDD-ZT5-A1 pluggable is inserted for 400G trunk rate configuration and DP04QSDD-E26-A1 pluggable is inserted for 100G trunk rate configuration.

Use this task to configure coherent probe on the EDFA2 card.

Before you begin

Insert the DP01QSDD-ZT5-A1 or DP04QSDD-E26-A1 pluggable in the PROBE port.

Procedure

1. Use the **hw-module location** <0/*<slot-id>*/NXR0> **mxponder-slice** *<slice-number>* command to configure the coherent probe, trunk rate, and trunk mode.

   Example

   ```
   RP/0/RP0/CPU0:ios(config)#hw-module location 0/2/NXR0 mxponder-slice 1
   RP/0/RP0/CPU0:ios(config-hwmod-mxp)#trunk-rate 100G
   RP/0/RP0/CPU0:ios(config-hwmod-mxp)#trunk-mode ZR
   ```

   Example

   ```
   RP/0/RP0/CPU0:ios(config)#hw-module location 0/2/NXR0 mxponder-slice 1
   RP/0/RP0/CPU0:ios(config-hwmod-mxp)#trunk-rate 400G
   RP/0/RP0/CPU0:ios(config-hwmod-mxp)#trunk-mode ZR
   ```

   Use the **no hw-module location** <0/*<slot-id>*/NXR0> **mxponder-slice** *<slice-number>* command to remove or disable the slice configuration.

   Example

   ```
   RP/0/RP0/CPU0:ios(config)#no hw-module location 0/2/NXR0 mxponder-slice 1
   RP/0/RP0/CPU0:ios(config-hwmod-mxp)#commit
   ```

2. Commit the configuration and exit.

   ```
   RP/0/RP0/CPU0:ios(config-hwmod-mxp)#commit
   RP/0/RP0/CPU0:ios(config-hwmod-mxp)#exit
   RP/0/RP0/CPU0:ios(config)#exit
   ```

3. Run the command **show hw-module location** 0/*<slot-id>*/NXR0> **mxponder-slice** *<slice-number>* to verify the configuration.

   Example

   ```
   RP/0/RP0/CPU0:ios#show hw-module location 0/2/NXR0 mxponder-slice 1
   Tue Mar 11 01:55:20.764 IST
   ```

```
Location:             0/2/NXR0
Slice ID:
1
Client Bitrate:
NONE
Trunk  Bitrate:
100G
Status:
Provisioned
Client Port                    Mapper/Trunk Port          CoherentDSP0/2/0/7

                                                            Traffic Split
Percentage
NONE                                 NONE                                0
```

```
RP/0/RP0/CPU0:ios#show hw-module location 0/2/NXR0 mxponder-slice 1
Tue Mar 11 01:55:20.764 IST
Location:             0/2/NXR0
Slice ID:
1
Client Bitrate:
NONE
Trunk  Bitrate:
400G
Status:
Provisioned
Client Port                    Mapper/Trunk Port          CoherentDSP0/2/0/7

                                                            Traffic Split
Percentage
NONE                                 NONE                                0
```

Verify coherent probe configurations

Use this procedure to verify the provisioned configuration and operational status of coherent probe ports and slices using network show commands.

Ensure that coherent probe ports and slice configurations are properly provisioned and operating as expected by retrieving and reviewing status and inventory details.

Use this task to check the setup and operational state of coherent probe ports on NCS platforms. This verification helps you confirm hardware installation, provisioning, and troubleshoot potential issues using relevant show commands

Procedure

1. Run the **show inventory** command to display physical inventory information for the coherent probe port.

   Example

```
RP/0RP0/CPU0:ios#show inventory location 0/2/NXR0
Tue Mar 11 01:41:39.512 IST
NAME: "0/2/NXR0", DESCR: "NCS 1014 EDFA terminal with equalization”
PID: NCS1K14-EDFA2     , VID: V00, SN: FCB2813B3B3
NAME: "Optics0/2/0/6", DESCR: "Cisco QSFP DD Pluggable Optical Time Domain
```

```
Reflectometer"
PID: ONS-QSFP-OTDR     , VID: VES1, SN: IIF2814000Y
NAME: "Optics0/2/0/7", DESCR: "Cisco QSFP DD ZT5 Pluggable Optics Module”
PID: DP01QSDD-ZT5-A1   , VID: V01 , SN: ACA282500L2
```

```
RP/0RP0/CPU0:ios#show inventory location 0/2/NXR0
NAME: "0/2/NXR0", DESCR: "NCS 1014 EDFA terminal with equalization"
PID: NCS1K14-EDFA2     , VID: V00, SN: FCB2813B3B3

NAME: "Optics0/2/0/5", DESCR: "Cisco SFP GE 1510 OSC Pluggable Optics Module"
PID: ONS-SC-PTP-1510   , VID: V01, SN: MZH2631007X

NAME: "Optics0/2/0/7", DESCR: "Cisco QSFP DD 400G ZR S Pluggable Optics Module"
PID: DP04QSDD-E26-A1   , VID: V01 , SN: 242355007
```

2. Run the **show hw-module location** command to verify the coherent probe configuration.

Example

```
RP/0/RP0/CPU0:ios#show hw-module location 0/2/NXR0 mxponder-slice 1
Tue Mar 11 01:55:20.764 IST
Location:             0/2/NXR0
Slice ID:             1
Client Bitrate:       NONE
Trunk  Bitrate:       100G
Status:               Provisioned
Client Port                    Mapper/Trunk Port         CoherentDSP0/2/0/7


Traffic Split Percentage
NONE                                 NONE                                0
```

```
RP/0/RP0/CPU0:ios#show hw-module location 0/2/NXR0 mxponder-slice 1
Tue Mar 11 01:55:20.764 IST
Location:             0/2/NXR0
Slice ID:             1
Client Bitrate:       NONE
Trunk  Bitrate:       400G
Status:               Provisioned
Client Port                    Mapper/Trunk Port         CoherentDSP0/2/0/7


Traffic Split Percentage
NONE                                 NONE                                0
```

3. Run the **show running-config** command to display provisioned slice and trunk port information. .

Example

```
RP/0/RP0/CPU0:ios#show running-config hw-module location 0/2/NXR0
Tue Mar 11 01:55:40.705 IST
hw-module location 0/2/NXR0
 mxponder-slice 1
  trunk-mode ZR
```

```
  trunk-rate 100G
```

```
RP/0/RP0/CPU0:ios#show running-config hw-module location 0/2/NXR0
Tue Mar 11 01:55:40.705 IST
hw-module location 0/2/NXR0
 mxponder-slice 1
  trunk-mode ZR
  trunk-rate 400G
```

4. Run the **show controllers optics** *rack/slot/instance/port* command to display the optics controller status for coherent probe optics port (port 7).

Example

```
RP/0/RP0/CPU0:ios#show controllers optics 0/2/0/7
Tue Mar 11 02:24:28.965 IST
 Controller State: Up
 Transport Admin State: In Service
Laser State: On
LED State: Green
Last link flapped: 00:29:45
Optics Status
         Optics Type:  QSFP-DD DWDM
          DWDM carrier Info: C BAND, MSA ITU Channel=Non-ITU,
Frequency=193.4750THz,
         Wavelength=1549.515nm
         Alarm Status:
         -------------
         Detected Alarms: None
         LOS/LOL/Fault Status:
         Alarm Statistics:

         -------------
         HIGH-RX-PWR = 0            LOW-RX-PWR = 2
         HIGH-TX-PWR = 0            LOW-TX-PWR = 2
         HIGH-LBC = 0               HIGH-DGD = 0
         OOR-CD = 0                 OSNR = 2
         WVL-OOL = 0                MEA  = 0
         IMPROPER-REM = 0
         TX-POWER-PROV-MISMATCH = 0
         Laser Bias Current = 0.0 %
         Actual TX Power = -2.57 dBm
         RX Power = -4.18 dBm
         RX Signal Power = -5.35 dBm
         Frequency Offset = 25 MHz

         Performance Monitoring: Enable
THRESHOLD VALUES
         ----------------

         Parameter                 High Alarm  Low Alarm  High Warning  Low
Warning
         ------------------------  ----------  ---------  ------------
-----------
         Rx Power Threshold(dBm)          3.0      -30.0           0.0
    0.0
```

```
         Tx Power Threshold(dBm)          0.0      -16.0           0.0
    0.0
         LBC Threshold(mA)                N/A        N/A          0.00
   0.00

         LBC High Threshold = 90 %
         Configured Tx Power = -2.50 dBm
         Configured CD High Threshold = 8600 ps/nm
         Configured CD lower Threshold = -8600 ps/nm
         Configured OSNR lower Threshold = 14.00 dB
         Configured DGD Higher Threshold = 40.00 ps
         Baud Rate =  30.0692733990 GBd
         Bits per Symbol = 2.0000000000  bits/symbol
         Modulation Type: QPSK
         Chromatic Dispersion -7 ps/nm
         Configured CD-MIN -2400 ps/nm  CD-MAX 2400 ps/nm
         Polarization Mode Dispersion = 0.0 ps
         Second Order Polarization Mode Dispersion = 176.00 ps^2
         Optical Signal to Noise Ratio = 23.50 dB
         SNR = 21.40 dB
         Polarization Dependent Loss = 0.50 dB
         Polarization Change Rate = 0.00 rad/s
         Differential Group Delay = 0.00 ps
         DAC RATE:  1x1.50
Transceiver Vendor Details

         Form Factor            : QSFP-DD
         Name                   : CISCO-ACACIA
         Part Number            : 10-3655-01
         Rev Number             : A
         Serial Number          : ACA282500L2
         PID                    : DP01QSDD-ZT5-A1
         VID                    : V01
         Firmware Version       : Major.Minor.Build
         Active                 : 70.130.21
         Inactive               : 70.130.21
         Date Code(yy/mm/dd)    : 24/05/05
         Fiber Connector Type: LC
         Otn Application Code: Not Set
         Sonet Application Code: Not Set
         Ethernet Compliance Code: Not set

 Transceiver Temperature : 34 Celsius

 AINS Soak                : None
 AINS Timer               : 0h, 0m
 AINS remaining time      : 0 seconds
```

```
RP/0/RP0/CPU0:ios#show controllers optics 0/2/0/7
Tue Mar 11 02:24:28.965 IST
Controller State: Down

 Transport Admin State: In Service

 Laser State: On

 LED State: Red

 Last link flapped: 00:09:45

 Optics Status
```

```
         Optics Type:  QSFP-DD DWDM
         DWDM carrier Info: C BAND, MSA ITU Channel=Non-ITU,
Frequency=193.4750THz,
         Wavelength=1549.515nm

         Alarm Status:
         -------------
         Detected Alarms: None


         LOS/LOL/Fault Status:

         Alarm Statistics:

         -------------
         HIGH-RX-PWR = 0            LOW-RX-PWR = 1
         HIGH-TX-PWR = 0            LOW-TX-PWR = 1
         HIGH-LBC = 0               HIGH-DGD = 0
         OOR-CD = 0                 OSNR = 1
         WVL-OOL = 0                MEA  = 0
         IMPROPER-REM = 0
         TX-POWER-PROV-MISMATCH = 0
         Laser Bias Current = 0.0 %
         Actual TX Power = -9.11 dBm
         RX Power = -40.00 dBm
         RX Signal Power = -40.00 dBm
         Frequency Offset = 0 MHz

         Performance Monitoring: Enable

         THRESHOLD VALUES
         ----------------

         Parameter                 High Alarm  Low Alarm  High Warning  Low
Warning
         ------------------------  ----------  ---------  ------------
-----------
         Rx Power Threshold(dBm)          3.0      -23.5           0.0
    0.0
         Tx Power Threshold(dBm)          4.0      -16.0           0.0
    0.0
         LBC Threshold(mA)                N/A        N/A          0.00
   0.00

         LBC High Threshold = 90 %
         Configured Tx Power = 0.00 dBm
         Configured CD High Threshold = 2400 ps/nm
         Configured CD lower Threshold = -2400 ps/nm
         Configured OSNR lower Threshold = 24.00 dB
         Configured DGD Higher Threshold = 40.00 ps
         Baud Rate =  59.8437500000 GBd
         Bits per Symbol = 4.0000000000  bits/symbol
         Modulation Type: 16QAM
         Chromatic Dispersion 0 ps/nm
         Configured CD-MIN -2400 ps/nm  CD-MAX 2400 ps/nm
         Polarization Mode Dispersion = 0.0 ps
         Second Order Polarization Mode Dispersion = 0.00 ps^2
         Optical Signal to Noise Ratio = 0.00 dB
         SNR = 0.00 dB
         Polarization Dependent Loss = 0.00 dB
         Polarization Change Rate = 0.00 rad/s
```

```
        Differential Group Delay = 0.00 ps
        DAC RATE:  1x1

 Transceiver Vendor Details

        Form Factor            : QSFP-DD
        Name                   : CISCO-ACACIA
        Part Number            : 10-3496-01
        Rev Number             : 10
        Serial Number          : 242355007
        PID                    : DP04QSDD-E26-A1
        VID                    : V01
        Firmware Version       : Major.Minor.Build
        Active                 : 71.120.8
        Inactive               : 71.110.25
        Date Code(yy/mm/dd)    : 24/06/18
        Fiber Connector Type: LC
        Otn Application Code: Not Set
        Sonet Application Code: Not Set
        Ethernet Compliance Code: Not set

 Transceiver Temperature : 39 Celsius



 AINS Soak                : None
 AINS Timer               : 0h, 0m
 AINS remaining time      : 0 seconds
```

5. Run the **show controllers coherentDSP** *rack/slot/instance/port* command to display coherentDSP controller status for coherent probe.

Example

```
RP/0/RP0/CPU0:ios#show controllers coherentDSP 0/2/0/7
Tue Mar 11 02:41:55.191 IST

Port                                          : CoherentDSP 0/2/0/7
Controller State                              : Up
Last link flapped                             : 00:47:11

Inherited Secondary State                     : Normal
Configured Secondary State                    : Normal
Derived State                                 : In Service
Loopback mode                                 : None
BER Thresholds                                : SF = 1.0E-5  SD = 1.0E-7
Performance Monitoring                        : Enable
Bandwidth                                     : 100.0Gb/s
Alarm Information:
LOS = 0 LOF = 0 LOM = 0
OOF = 0 OOM = 0 AIS = 0
IAE = 0 BIAE = 0        SF_BER = 0
SD_BER = 0      BDI = 0 TIM = 0
FECMISMATCH = 0 FEC-UNC = 0     FLEXO_GIDM = 0
FLEXO-MM = 0    FLEXO-LOM = 0   FLEXO-RDI = 0
FLEXO-LOF = 0
Detected Alarms                               : None

Bit Error Rate Information
PREFEC  BER                                   : 1.29E-08
POSTFEC BER                                   : 0.00E+00
```

```
Q-Factor                                          : 14.80 dB

Q-Margin                                          : 8.50 dB

OTU TTI Received

FEC mode                                          : O_FEC

Flexo-Mode                                        : Enable
Flexo Details:
        Tx GID                                    : 0
        Rx GID                                    : 0

AINS Soak                                         : None
AINS Timer                                        : 0h, 0m
AINS remaining time                               : 0 seconds
```

```
RP/0/RP0/CPU0:ios#show controllers coherentDSP 0/2/0/7
Port                                              : CoherentDSP 0/2/0/7
Controller State                                  : Down
Last link flapped                                 : 00:11:17

Inherited Secondary State                         : Normal
Configured Secondary State                        : Normal
Derived State                                     : In Service
Loopback mode                                     : None
BER Thresholds                                    : SF = 1.0E-5  SD = 1.0E-7
Performance Monitoring                            : Enable
Bandwidth                                         : 400.0Gb/s
Alarm Information:
LOS = 1 LOF = 0 LOM = 0
OOF = 0 OOM = 0 AIS = 0
IAE = 0 BIAE = 0        SF_BER = 0
SD_BER = 0      BDI = 0 TIM = 0
FECMISMATCH = 0 FEC-UNC = 0     FLEXO_GIDM = 0
FLEXO-MM = 0    FLEXO-LOM = 0   FLEXO-RDI = 0
FLEXO-LOF = 0
Detected Alarms                                   : LOS

Bit Error Rate Information
PREFEC  BER                                       : 5.00E-01
POSTFEC BER                                       : 0.00E+00
Q-Factor                                          : 0.00 dB

Q-Margin                                          : 0.00 dB

OTU TTI Received

FEC mode                                          : C_FEC

Flexo-Mode                                        : Enable
Flexo Details:
        Tx GID                                    : 0
        Rx GID                                    : 0

AINS Soak                                         : None
```

```
AINS Timer                                          : 0h, 0m
AINS remaining time                                 : 0 seconds
```

Configure PRBS on EDFA2 card

Use this procedure to configure Pseudorandom Bit Sequence (PRBS) on the Coherent Probe port of an EDFA2 card without requiring the maintenance state.

The EDFA2 card supports PRBS configuration only on Coherent Probe port.

For EDFA2 card, you can configure PRBS only for coherentDSP without setting the secondary admin state of the controllers to maintenance.

Use this task to configure PRBS without maintenance state.

Procedure

1. Enter the **controller coherentDSP** *R/S/I/P* command to enter the coherentDSP controller configuration mode.

   Example

   ```
   RP/0/RP0/CPU0:ios(config)#controller CoherentDSP0/0/0/7
   ```

2. Enter the **prbs mode {source | sink | source-sink} pattern {pn31 | pn23 | pn15 | pn7}** to configure the PRBS mode and pattern.

   Example

   ```
   RP/0/RP0/CPU0:ios(config-CoDSP)#prbs mode source-sink pattern pn15
   ```

3. Commit the changes.

   Example

   ```
   RP/0/RP0/CPU0:ios(config-CoDSP)#commit
   ```

Verify PRBS

Use this procedure to verify the configuration and performance metrics of PRBS on a CoherentDSP controller.

Use these steps to verify CoherentDSP controller PRBS details and performance monitoring details.

Procedure

1. Run the **show controllers coherentDSP** *rack/slot/instance/port* **prbs-details** command to display PRBS details configured on a coherentDSP controller.

Example

```
RP/0/RP0/CPU0:ios#show controllers coherentDSP 0/2/0/7 prbs-details
Tue Mar 11 03:13:34.425 IST

----------------------PRBS details------------------
PRBS Test              : Enable
PRBS Mode            : Source-Sink
PRBS Pattern          : PN7
PRBS Status             : Locked
PRBS Lock Time(in seconds)        : 1403
PRBS Bit Errors                             : 0
PRBS Found Count                         : 1
PRBS Lost Count                             : 0
PRBS Configured Time                : 11 Mar 02:50:08 (1406 seconds elapsed)
PRBS First Lock Established Time: 11 Mar 02:50:11 (1403 seconds elapsed)
Result Summary                              : PASS
```

2. Run the **show controllers coherentDSP** *rack/slot/instance/port* **pm current 30-sec|15-min|24-hours prbs**to view the PRBS performance monitoring parameters on a coherentDSP controller.

Example

```
RP/0/RP0/CPU0:ios#show controllers coherentDSP 0/2/0/7 pm current 15-min prbs
Tue Mar 11 03:21:31.173 IST
 PRBS in the current interval [03:15:00 - 03:21:31 Tue Mar 11 2025]
 PRBS current bucket type : Valid
 EBC          : 0           Threshold : 0         TCA(enable)  : NO
 FOUND-COUNT  : 0           Threshold : 0         TCA(enable)  : NO
 LOST-COUNT   : 0           Threshold : 0         TCA(enable)  : NO
 FOUND-AT-TS  : NULL
 LOST-AT-TS   : NULL
 CONFIG-PTRN  : PRBS_PATTERN_PN7
 STATUS       : LOCKED
Last clearing of "show controllers OTU" counters neve
```

11 Configure OTDR

Topics:

- ONS-QSFP-OTDR pluggables
- Automatic bidirectional OTDR scan
- OTDR scan status
- OTDR baseline

This section provides details about on the OTDR enhancements for the ONS-QSFP-OTDR pluggable of the EDFA2 card.

Table 75: Feature History

Feature Name	Release Information	Feature Description
OTDR enhancements	Cisco IOS XR Release 25.4.1	These functionality enhancements have been implemented on the ONS-QSFP-OTDR pluggable of the EDFA2 card: • OTDR results now include total measured loss and total measured length alongside existing results such as scan sirection, scan status, optical return loss, SOR file, total events detected, and the events. • Unique names can be assigned to SOR files for easier identification. • SOR files from automatic and manual OTDR scans are organized into separate folders to differentiate between file types. CLI: The keyword **label** *string* is added to the command **otdr-start controller ots** *R/S/I/P direction*.

ONS-QSFP-OTDR pluggables

This section explains the function, key attributes, and operational details of ONS-QSFP-OTDR pluggables for fiber network assessment.

The ONS-QSFP-OTDR pluggable is an optical time-domain reflectometer (OTDR) module that

- uses a Q-DD form factor and plugs into port 6 of the NCS1K14-EDFA2 line card within the NCS1014 chassis,
- enables manual scans to assess and diagnose the condition and performance of an optical fiber network, and
- identifies fiber faults and events by sending short optical pulses and measuring the Rayleigh backscatter along the fiber.

Table 76: Feature History

Feature Name	Release Information	Feature Description
ONS-QSFP-OTDR pluggable	Cisco IOS XR Release 25.1.1	The ONS-QSFP-OTDR is a Q-DD form factor module that plugs into port 6 of the NCS1K14-EDFA2 line card, within the NCS1014 Chassis. With this pluggable, you can conduct a manual scan to assess and diagnose the condition and performance of an optical fiber network. CLI commands are: • `otdr-start controller ots R/S/I/P {rx|tx}` • `otdr-stop controller ots R/S/I/P {rx|tx}`

An ONS-QSFP-OTDR pluggable is designed for use with the EDFA2 card and provides real-time measurements of loss and back reflection for the fiber pair connected to the TX and RX ports.

SOR file

You can view OTDR measurement results in a Standard OTDR Record (SOR) file. The SOR file includes fiber trace details such as distance, reflectance, loss, and fiber attenuation measurements.

From Release 25.4.1, SOR files from manual and automatic scans are stored in separate folders within the OTDR directory. Automatically generated SOR files are saved in `/harddisk:/otdr/auto/`, while manually triggered SOR files are stored in the existing `/harddisk:/otdr` folder.

Benefits

ONS-QSFP-OTDR pluggables offer several benefits:

- Assess the quality of the fiber during system installation, before any live traffic run.

- Monitor the fiber link during operation, including live traffic. You can also monitor the fiber link during troubleshooting after cable cuts or repairs.
- Measure attenuation over the entire fiber link and across individual fiber sections.
- Determine the distance and magnitude of insertion loss and reflection loss.
- Detect fiber events, including concentrated loss events, reflection events, end-of-fiber events, and discontinuities or defects such as pinches or cuts. The OTDR pluggable can also detect loss events from splicing, patch panel connections, and couplers.

Limitations

The ONS-QSFP-OTDR pluggable has these limitations:

- The OTDR scan feature is supported only on the LINE OTS controller.
- Scans are conducted separately for the OTS controller in the RX direction or TX direction.

OTDR modes

This section describes the operational modes of the Optical Time Domain Reflectometer (OTDR) in Cisco NCS 1014 platforms.

In NCS 1014, OTDR works in two modes:

- Auto
- Expert

Auto mode

The device automatically selects the optimal values for OTDR pulse width, scan duration, capture start time, and capture end time parameters. This is the default mode and does not require explicit configuration. However, you can manually configure the other scan parameters if needed.

Expert mode

You must manually configure all OTDR scan parameters with the required valid values for measurement. Automatic adjustments are not performed in this mode.

Configure the OTDR scan parameters for auto and expert modes

Use this procedure to configure the OTDR scan parameters for both auto and expert modes on an NCS 1014 device.

Follow these steps to configure the various parameters for the OTDR scan. If you do not configure the OTDR scan parameters, the NCS 1014 device uses the default values for OTDR scan parameters.

Procedure

1. Enter the OTS controller configuration mode for the port on which you want to configure the OTDR parameters.

   Example

```
RP/0/RP0/CPU0:ios#config
RP/0/RP0/CPU0:ios(config)#controller ots 0/0/0/0
```

2. Enter the OTDR mode.

If you want to configure the	then run the command
Expert mode	`RP/0/RP0/CPU0:ios(config-Ots)#otdr scan-mode expert`
Auto mode	Auto mode is the default and does not require explicit configuration.

3. Set the required parameters for the OTDR scan. See OTDR scan parameters for auto and expert modes on page 319 for the complete list of OTDR parameters, commit, and exit the configuration.

Example

```
RP/0/RP0/CPU0:ios(config-Ots)#otdr rx auto reflectance-threshold -50
RP/0/RP0/CPU0:ios(config-Ots)#otdr rx auto splice-loss-threshold 0.2
RP/0/RP0/CPU0:ios(config-Ots)#otdr rx expert pulse-width 6000
RP/0/RP0/CPU0:ios(config-Ots)#commit
RP/0/RP0/CPU0:ios(config-Ots)#exit
RP/0/RP0/CPU0:ios(config)#exit
```

OTDR scan parameters for auto and expert modes

This section provides a side-by-side comparison of the key OTDR scan parameters, including definitions, measurement units, valid value ranges, and default values for both Auto and Expert modes.

This table provides an overview of key OTDR parameters, including their definitions, measurement units, range of values and the default values for Auto and Expert modes.

Table 77: OTDR scan parameters in Auto mode

Parameter	Description	Unit	Range	Default
otdr { rx | tx} auto reflectance-threshold <*value*>	Threshold beyond which a reflective anomaly is reported as an event in the Rx or Tx direction.	dB	-50 to -10	-40
otdr { rx | tx} auto splice-loss-threshold <*value*>	Threshold beyond which a loss anomaly is reported as an event in Rx or Tx direction.	dB	0.2 to 5	0.35
otdr { rx | tx} auto excess-reflection-threshold <*value*>	Threshold beyond which a reflective event is reported as an excessive reflection event in the Rx or Tx direction.	dB	-50 to -23	-23
otdr { rx | tx} auto back-scattering <*value*>	The back scattering value in the Rx or Tx direction.	dB	-90 to -70	-81.87

Parameter	Description	Unit	Range	Default
otdr { rx | tx} auto refractive-index <*value*>	The refractive-index value in the Rx or Tx direction.	–	1.000 to 2.000	1.4682
otdr { rx | tx} auto excess-orl-threshold<*value*>	Threshold below which OTDR-ABS-ORL-EXCEEDED alarm is reported in the Rx or Tx direction.	dB	10 to 60	60
otdr { rx | tx} auto excess-attenuation-threshold<*value*>	Threshold beyond which a Non-Reflective event is reported as an excessive attenuation event in the Rx or Tx direction.	dB	0.5 to 99	5
otdr { rx | tx} auto end-of-fiber-loss-threshold <*value*>	Threshold based on which the OTDR identifies the fiber's end, distinguishing it from other components like splices or connectors.	dB	0.5 to 31.0	5.0

Table 78: OTDR scan parameters in Expert mode

Parameter	Description	Unit	Range	Default
otdr {rx | tx} expert pulse-width <value>	Pulse width to be used during the expert scan in the Rx or Tx direction.	ns	23 to 20000	20000
otdr {rx | tx} expert capture-end <value>	OTDR capture endpoint during the expert scan in the Rx or Tx direction.	cm	0 to 11900000	11900000
otdr {rx | tx} expert capture-start <value>	OTDR capture start point during the expert scan in the Rx or Tx direction.	cm	0 to 11900000	0
otdr {rx | tx} expert scan duration <value>	OTDR scan duration during the expert scan in the Rx or Tx direction.	seconds	0 to 180	180

OTDR negotiations

This section explains how OTDR negotiations coordinate scans between network nodes to avoid measurement conflicts and ensure accurate results.

An OTDR negotiation is a network coordination process that

- uses a message-based handshake between two adjacent network nodes equipped with OTDR devices,
- ensures that only one node may initiate an OTDR scan at a time to prevent simultaneous scans on the same fiber, and
- helps avoid measurement conflicts to ensure accurate scan results.

You can use **force** option in the command **otdr-start controller ots** *R/S/I/P* to bypass negotiation during the OTDR scan process.

Table 79: Feature History

Feature Name	Release Information	Feature Description
OTDR negotiation	Cisco IOS XR Release 25.2.1	The OTDR scan process has been enhanced to include negotiation with a remote peer before initiating the scan. This negotiation helps prevent simultaneous scans on the same fiber, thereby avoiding measurement conflicts and ensuring accurate scan results. The force option can be used to start a scan without negotiation. However, it should be used carefully to avoid simultaneous scans between the near-end and far-end nodes on the same fiber. Command modified: The keyword **force** has been added to the **otdr-start controller ots** *R/S/I/P direction* command.

Advantage

OTDR negotiations help prevent simultaneous scans on the same fiber, thereby avoiding measurement conflicts and ensuring accurate scan results.

How OTDR negotiation works

This section describes the negotiation process between peer nodes for efficient and conflict-free OTDR scanning.

To ensure an efficient and conflict-free OTDR scan process, the local node follows these steps:

1. Before starting any OTDR scan, the local node checks if the fiber is available for scanning.
2. The local node verifies whether there is an ongoing scan from the remote node.
3. If no scan is currently running on the fiber, the local node requests a remote span reservation.
4. If the remote node acknowledges the remote span reservation, the local node initiates the scan.

   This process prevents conflicts between peer node scans.

> **Note**
>
> If the link between the nodes is down or OSC pluggable is missing, the negotiation cannot occur, and the scan request will fail. In this scenario, you can still initiate an OTDR scan without negotiation. See Start the OTDR scan manually on page 322.

Start the OTDR scan manually

Use this procedure to configure and run a manual OTDR scan to diagnose fiber defects, check fiber quality, or verify proper installation.

To manually initiate the OTDR scan to diagnose fiber defects, check fiber quality, or verify proper installation.

From Release 25.4.1, you can use the `label` keyword to append a custom substring as a prefix to the SOR file name. This substring helps you identify and retrieve specific SOR files stored in the directory.

Before you begin

Perform the patch cord connection check before starting the manual scan.

Procedure

1. Use the **otdr-start controller ots** *R/S/I/P direction* to start the OTDR scan manually.

   Example

   ```
   RP/0/RP0/CPU0:ios#otdr-start controller ots 0/3/0/0 tx
   Tue Jan 7 04:14:13.712 UTC
   OTS OTDR Scan Started at TX

   RP/0/RP0/CPU0:ios#otdr-start controller ots 0/3/0/0 rx
   Tue Jan 7 04:33:33.326 UTC
   OTS OTDR Scan Started at RX
   ```

2. Use the `force` keyword, to run the manual OTDR scan operation without negotiating with the peer or when the communication channel is not up.

   Example

   ```
   RP/0/RP0/CPU0:ios#otdr-start controller ots 0/0/0/0 rx force
   Wed Sep 4 08:78:34.186 UTC
   OTS OTDR Scan Started at RX
   RP/0/RP0/CPU0:ios#
   ```

   The forced **otdr-start** command can fail immediately if the OTDR is already performing a scan on any of the four possible spans associated with the ports (0-TX, 0-RX, 2-TX, 2-RX). In such cases, this error message may appear:

   OTDR Scan cannot be started as another scan is in progress.

   To resolve this issue, wait before attempting to restart the OTDR scan until the ongoing scan is complete.

3. Use the `label` *string* keyword, to append a custom substring as a prefix to the SOR file name.

Example

```
RP/0/RP0/CPU0:ios#otdr-start controller ots 0/0/0/0 rx label Site1.ABC_xyz-1
Mon Nov 3 09:56:23.278 UTC
OTS OTDR Scan Started at RX
RP/0/RP0/CPU0:ios#
```

This example appends the string *Site1.ABC_xyz-1* to the SOR file name. For example: `/harddisk:/otdr/Site1.ABC_xyz-1_nodename_OTDR_Ots0_0_0_0_RX_20250306-110133.sor`.

The OTDR label must adhere to these limitations: Only the special characters dot, hyphen, and underscore are permitted. The maximum file name length is 255 characters. The maximum label length is 55 characters.

The OTDR scan is initiated manually on the selected direction. If a scan is already in progress, wait for it to finish before restarting.

What to do next

- Review the OTDR scan results to verify fiber integrity or detect anomalies.
- If any issues are identified, take corrective action.

View the OTDR measurements

Use this procedure to verify the results of OTDR scans, including total measured loss, length, events, and SOR file information.

Use this procedure to view the OTDR scan measurement results.

From Release 25.4.1, the OTDR scan measures Total Measured Loss and Total Measured Length and displays them as part of the OTDR results.

Procedure

Use the command **show controllers ots** *R/S/I/P* **otdr-info** *direction* to view the OTDR scan measurements.

Example

```
RP/0/RP0/CPU0:ios#show controllers ots 0/3/0/0 otdr-info rx
Tue Jan  7 04:37:46.711 UTC
Scan Direction: RX
Scan Status: Data Ready
Optical Return Loss: -90.6 dB
SOR file: /harddisk:/otdr/R1_OTDR_Ots0_3_0_0_RX_20250107-043559.sor
Total Events detected: 1
Scan Timestamp: Tue Jan  7 04:33:33 2025 UTC
Event Type Legend:  NR:Non-Reflective  R:Reflective  FE:Fiber-End
ER:Excess-Reflection EA:Excess-Attenuation
Event#      |  Detected Event(s)       |  Location(m)     |  Accuracy(m)
|  Magnitude(dB)   |  Attenuation/km(dB)
1           |  NR FE                   |  11.9100         |  34.44
|  5.53           |  0.30
```

Example

These are the sample OTDR measurement results displaying Total Measured Loss, Total Measured Length and SOR file with appended OTDR label.

```
RP/0/RP0/CPU0:ios#sh controllers ots 0/3/0/0 otdr-info tx
Thu Aug 21 07:18:27.272 UTC
        Scan Direction: TX
        Scan Status: Data Ready
        Total Measured Loss: 12.05 dB
        Total Measured Length: 1664.3300 m
        Optical Return Loss: 90.0 dB
        SOR file:
/harddisk:/otdr/Site1.ABC_xyz-1_ios_Ots0_3_0_0_TX_20250821-070722.sor
        Total Events detected: 7
        Scan Timestamp: Thu Aug 21 07:07:22 2025 UTC
        Event Type Legend:  NR:Non-Reflective  R:Reflective  FE:Fiber-End
ER:Excess-Reflection EA:Excess-Attenuation

       Event#      |  Detected Event(s)       |  Location(m)     |  Accuracy(m)
     |  Magnitude(dB)   |  Attenuation/km(dB)
        1           |  NR                      |  280.2100        |  5.74
        |  0.37            |  0.30
        2           |  NR                      |  353.6900        |  5.74
        |  0.42            |  0.30
        3           |  NR                      |  994.0800        |  34.44
        |  0.77            |  0.30
        4           |  NR                      |  1106.7600       |  34.44
        |  0.41            |  0.30
        5           |  NR                      |  1246.1600       |  34.44
        |  1.42            |  0.30
        6           |  NR                      |  1440.9600       |  34.44
        |  1.42            |  0.30
        7           |  NR FE                   |  1664.3300       |  34.44
        |  2.08            |  0.30
```

After you upgrade the FPD of the line card, you may not be able to view the previous OTDR scan results using the **show controllers ots** *Rack/Slot/Instance/Port* otdr-info *direction*. To access results from earlier OTDR scans, locate the .SOR files on the hard disk.

Note

The configured OTDR expert pulse-width value is accurately written to the hardware registers. However, due to the granularity of the hardware, the value may be rounded. This rounding can lead to differences between the provisioned values and the values displayed in the SOR file.

You can dynamically raise or clear Excessive Reflection (ER) and Excess Attenuation (EA) events and alarms by modifying their respective threshold values. In contrast, to raise or clear Fiber End (FE) and Reflectance (R) events, change the relevant thresholds and rerun the OTDR scan.

See OTDR scan status on page 328 for a list of the different OTDR scan statuses and their definitions.

Stop the OTDR scan

Use this procedure to configure the device to manually stop an active OTDR scan using a command.

Use this procedure to stop the OTDR scan manually.

Procedure

Enter the command **otdr-stop controller ots** *R/S/I/P direction* to stop the OTDR scan.

Example

```
RP/0/RP0/CPU0:ios#otdr-stop controller ots 0/0/0/0 rx
Wed Feb  9 06:03:37.406 UTC
OTS OTDR Scan Stopped at RX
RP/0/RP0/CPU0:ios#
```

Automatic bidirectional OTDR scan

This section explains how automatic bidirectional OTDR scans identify fiber faults and locate issues by triggering scans in both directions during key network events.

Table 80: Feature History

Feature Name	Release Information	Feature Description
Automatic OTDR scan	Cisco IOS XR Release 25.2.1	An OTDR scan is automatically triggered on both Rx and Tx directions, whenever events such as span fault, span restore, device power cycle, and line card cold reload occur. The automatic scan lets you quickly identify fiber failure type and fault location, while avoiding any collision during the bidirectional autoscan. Commands added to enable auto OTDR scan and view its results: • **otdr auto-scan {enable | disable}** • **show olc otdr-status [details]**

Automatic OTDR scan triggering events

The OTDR scan, starts automatically when events like span fault, span restoration, automatic OTDR scan enabling, device power cycling, and line card cold reload occur.

Autoscan direction and duration

The OTDR autoscan scans events in both Tx and Rx directions.

In both span up and span down events, the bidirectional OTDR scan process terminates after both Rx and Tx scans have been completed successfully. You can stop the scan sequence by disabling the autoscan feature.

The autoscan duration for Auto and Expert modes, the scan takes upto three minutes to complete. . During the autoscan, the OTDR-SCAN-IN-PROGRESS-RX and OTDR-SCAN-IN-PROGRESS-TX alarms are raised and get cleared once the scan is finished.

Autoscan behavior

The autoscan has these key behaviors:

- The autoscan reserves the span on the peer node and locks the OTDR resource to prevent manual triggering of a scan using the **otdr-start** command . However, if a manual scan is already in progress, the autoscan will wait until the manual scan is completed before proceeding.
- The **autoscan** terminates the ongoing scan and starts a new one if a change in **Span Status** is detected.

Span fault and restoration events detection

This table details how the span fault and span restore events are detected:

Table 81: Definition of span up and span down events

Events	Definition
Span Down	Raise of OSC-LOS and EDFA_RX_LOS alarms at the OSC controller
Span Up	Clearing of OSC-LOS and EDFA_RX_LOS alarms at the OSC controller

How the bidirectional autoscan works

This section explains how bidirectional OTDR autoscan operates during unidirectional and bidirectional fiber cuts and fiber restoration events.

Unidirectional and bidirectional fiber cuts

The bidirectional OTDR auto scan functions in the event of unidirectional and bidirectional fiber cuts, and during fiber restoration events.

In a span including both broken and non-broken fibers, the scanning behavior differs based on the type of fiber cut:

- **Unidirectional Fiber Cut**:
  - The broken fiber is scanned in both the Rx and Tx directions by the Near End (NE) and Far End (FE) nodes.
  - The non-broken fiber is scanned only in the Tx direction.
- **Bidirectional Fiber Cut**:
  - Both fibers are scanned in both the Rx and Tx directions.

Span down event

For a bidirectional autoscan triggered by a span down event:

- Timeslots are used for both unidirectional and bidirectional fiber cuts as the node communication and hence negotiation is not possible.
- Timeslots are of equal duration and are alternately assigned to Rx and Tx directions. This order is consistent across both NE and FE node.

- If a scan cannot be completed inside the assigned timeslot or the scan execution failed for any reason, the execution is rescheduled at the next available timeslot for that port/direction.

Span up event

For a bidirectional autoscan triggered by a span up event:

- Rx and Tx scans are executed sequentially through negotiation with the remote node, eliminating the need for time slots.

  The OSC and associated Ethernet communication must be functioning properly to initiate the scan.

In both span up and span down events, the bidirectional OTDR scan process terminates after both Rx and Tx scans have been completed successfully. You can stop the scan sequence by disabling the autoscan feature.

Enable automatic OTDR scan

Follow these steps to enable OTDR scan to run automatically during certain events.

Procedure

1. Enter the OTS controller configuration mode for the port you want to configure the automatic OTDR scan.

   Example

   ```
   RP/0/RP0/CPU0:ios#configure
   RP/0/RP0/CPU0:ios(config)#optical-line-control controller Ots 0/0/0/0
   ```

2. Enable automatic OTDR scan.

   Example

   ```
   RP/0/RP0/CPU0:ios(config-olc-ots)#otdr auto-scan enable
   ```

   If you want to disable the automatic OTDR scan, use the **otdr auto-scan disable** command.

3. Commit the changes and exit all the configuration modes.

   Example

   ```
   RP/0/RP0/CPU0:ios(config)#commit
   RP/0/RP0/CPU0:ios(config)#exit
   ```

Verify autoscan status

Use this procedure to verify the operational status and details of the OTDR autoscan using a command-line interface.

Use this task to verify the status of the autoscan.

Procedure

Use the command **show olc otdr-status [details]** to view the automatic OTDR scan results.

Example

```
RP/0/RP0/CPU0:R1#show olc otdr-status
Tue Oct 10 20:15:57.359 UTC

Controller                  : Ots0/0/0/0
OTDR Auto-scan Status       : RUNNING
Status Detail : Completed on Span Down.
Auto-scan Rx Start Time     : 2023-10-10 20:12:01
Rx Status Detail            : Completed on Span Down
Auto-scan Tx Start Time     : 2023-10-10 20:14:31
Tx Status Detail            : Waiting for OTDR Resource
Optical Span Status         : Up
Trigger Event               : Manual
Last Trigger Event          : Manual
```

See OTDR scan status on page 328 for a list of the different OTDR scan statuses and their definitions.

OTDR scan status

This section lists and explains all possible OTDR scan status.

This section describes and explains the various OTDR statuses that appear when using the **show olc controller ots R/S/I/P otdr-status** and **show controller ots R/S/I/P otdr-info** commands.

Table 82: OTDR scan status

Scan status	Description
Measuring	OTDR scan is currently in progress.
Data Processing	OTDR scan has completed, and the data is ready for review
Data Ready	OTDR scan is stopped by the user, when it is in progress.
Stopped	OTDR is processing data just before populating the event table.
Error	The OTDR status may occasionally enter an Error state for various unpredictable reasons. One possible cause is a timeout event, which occurs if the scan is not completed within five minutes. In such cases, no SOR files or event table is generated. It is important to note that this is a rare occurrence. You can still initiate the OTDR scan to obtain the scan results.

Scan status	Description
Waiting Span Reservation	Waiting for remote OTDR span reservation (a span reservation request has been sent but no answer is received yet or the remote node is busy). **Note** This status may be visible even during the non-negotiated OTDR scan that is initiated using the `force` option.
Timeout	The scan did not finish within the expected time.
Communication Failed or Communication Failed, retrying in less than x minutes	The system cannot reserve the span due to a link failure after a specified time. The scan will be retried after some time.
Local Resource Not Available	The local resource is busy after a specified time.
Span Reservation Failed or Span Reservation Failed, retrying in less than x minutes	The remote resource is busy after a specified time, and scan will be retried after sometime.
OTDR Resource Not Available, or OTDR Resource Not Available, retrying in less than x minutes	The local OTDR resource is busy, and scan will be retried after sometime.

This table explains the various OTDR scan statuses that are applicable for manual and autoscan.

Table 83: OTDR scan status applicable for manual and autoscan

Type of OTDR scan	Scan Status	
	show olc controller ots R/S/I/P otdr-status	**show controller ots R/S/I/P otdr-info**
Manual	NA	• Measuring • Data Processing • Data Ready • Stopped • Error • Waiting Span Reservation • Timeout • Communication Failed • Local Resource Not Available • Span Reservation Failed • Scan Not Allowed

Type of OTDR scan	Scan Status	
	show olc controller ots R/S/I/P otdr-status	show controller ots R/S/I/P otdr-info
Autoscan	• Measuring • Data Processing • Data Ready • Stopped • Error • OTDR Resource Not Available, or OTDR Resource Not Available, retrying in less than x minutes • Waiting Span Reservation • Timeout • Communication Failed or Communication Failed, retrying in less than x minutes • Local Resource Not Available • Span Reservation Failed or Span Reservation Failed, retrying in less than x minutes • Scan Not Allowed	• Measuring • Data Processing • Data Ready • Stopped • Error • Waiting Span Reservation

OTDR baseline

This section explains what an OTDR baseline is, its key attributes, and its role in maintaining and troubleshooting optical networks.

Table 84: Feature History Table

Feature Name	Release Information	Description
OTDR baseline	Cisco IOS XR Release 25.2.1	OTDR saves a baseline with the scan results the first time a link is up. This baseline captures essential data about the fiber characteristics at the time of initial installation. The baseline is used as a benchmark for future OTDR scans to identify changes or degradation in the optical fiber span, facilitating maintenance and troubleshooting efforts. It helps verify the integrity and performance of the optical network over time.

An OTDR baseline is the initial set of OTDR scan results that are saved as a reference point for evaluating the condition and performance of an optical fiber span over time. It captures essential data about the fiber characteristics at the time of initial installation or configuration, including:

- **SOR filename**: The filename of the SOR file that documents the scan results.
- **Optical Return Loss (ORL)**: Measurement of the reflected optical power, indicating the quality of the fiber connection.
- **Detected events**: Any anomalies, reflections, or changes detected during the scan, such as splices, bends, or breaks.
- **Scan timestamp**: The specific date and time when the baseline scan was performed.

You can find the OTDR baseline SOR files in the `/harddisk:/otdr/baseline` directory.

Purpose of the baseline

The baseline is used as a benchmark for future OTDR scans to identify changes or degradation in the optical fiber span, facilitating maintenance and troubleshooting efforts. It helps verify the integrity and performance of the optical network over time.

Baseline creation

- The OTDR baseline is saved after the automatic OTDR scan when the link is up for the first time.
- If the OTDR-ABS-REFLECTANCE-EXCEEDED-TX or OTDR-ABS-REFLECTANCE-EXCEEDED-RX alarms are active on a link, the OTDR baseline is not saved. In such cases, clear the alarm and save the baseline manually.

Baseline storage location

Save a new OTDR baseline

Use this procedure to configure and save the current OTDR scan results as a new baseline when required by network changes or system alarms.

Set the current OTDR scan results as a baseline in these situations.

- The OTDR-ABS-REFLECTANCE-EXCEEDED alarm is active. The system did not save the baseline during the initial scan.
- OTDR scan status is:
  - **Unknown**
  - **Stopped**, or
  - **Error**
- If you upgrade or expand the network, you may need to save a new baseline.

You must run an OTDR scan again to save a new baseline.

Procedure

1. Use the **otdr-start controller ots** *R/S/I/P* **rx|tx** command to start the OTDR scan manually

Example

```
RP/0/RP0/CPU0:ios#otdr-start controller ots 0/0/0/0 rx
Wed Feb 9 05:49:39.178 UTC
OTS OTDR Scan Started at RX
```

2. Use the **otdr save baseline controller ots** *R/S/I/P* **rx|tx** command to set the current OTDR scan results as the baseline.

Example

```
RP/0/RP0/CPU0:ios#otdr save baseline controller ots 0/0/0/0 rx
```

Example

This sample output is an example of a failure to save a baseline.

```
RP/0/RP0/CPU0:P2B_DT_04#otdr save baseline controller ots 0/0/0/0 tx
Thu Apr  3 17:38:02.833 +0530
'optics' detected the 'warning' condition 'OTDR baseline cannot be saved due
 to unavailability of scan results'
```

The system saves the current OTDR scan as the new baseline. If scan results are unavailable, the system displays an error and the baseline is not saved.

View OTDR baseline

Use this procedure to view the OTDR baseline using the appropriate CLI command to assess fiber event detection and link quality.

Follow this step to view the OTDR baseline.

Procedure

Enter the **show controller ots** *R/S/I/P* **otdr-info tx|rx baseline** command to view the OTDR baseline.

Example

```
RP/0/RP0/CPU0:ios#show controller ots 0/1/0/0 otdr-info rx baseline
Mon May 19 16:27:41.912 IST

        Display Baseline Info:

        Scan Direction: RX

        Scan Status: Data Ready

        Optical Return Loss: 48.0 dB

        SOR file:
/harddisk:/otdr/baseline/kepler-230-220_OTDR_Ots0_1_0_0_RX_20250319-093155.sor


        Total Events detected: 6

        Scan Timestamp: Wed Mar 19 09:29:19 2025 UTC
```

```
        Event Type Legend:  NR:Non-Reflective  R:Reflective  FE:Fiber-End
ER:Excess-Reflection EA:Excess-Attenuation

       Event#      |  Detected Event(s)       |  Location(m)     |  Accuracy(m)
     |  Magnitude(dB)   |  Attenuation/km(dB)
        1           |  NR EA                   |  2106.8600       |  34.44
        |  24.48           |  0.00
        2           |  NR                      |  5250.7200       |  501.86
        |  1.17            |  0.14
        3           |  NR                      |  6416.0500       |  501.86
        |  0.39            |  0.30
        4           |  NR                      |  10208.9400      |  501.86
        |  2.54            |  0.00
        5           |  R FE                    |  22424.7200      |  1000.78
        |  -26.08          |  0.14
        6           |  NR FE                   |  22424.7200      |  4756.43
        |  3.50            |  0.14
```

12 Optical Safety on EDFA2 Card

Topics:

- Optical safety on EDFA2 card
- Configure optical safety for the EDFA2 card

This section lists and describes the commands used to configure optical safety features on the EDFA2 card, including their functions and operational context.

Table 85: Feature History

Feature Name	Release Information	Feature Description
Optical safety on EDFA2 card	Cisco IOS XR Release 25.1.1	You can configure the optical safety mode to implement an optical safety mechanism on the BST2 and PRE amplifiers of the EDFA2 card. It ensures safe power levels and facilitates system recovery across various configurations and scenarios during fiber breakdown. This optical safety manages the shutdown and restart of the EDFA Laser using Automatic Laser Shutdown and Automatic Power Reduction mechanisms. This ensures that the Hazard Level 1 power limit is not exceeded, thereby ensuring personnel safety. CLI commands are: • **egress-ampli-safety-control-mode {auto | disabled}** • **egress-ampli-osri** • **egress-ampli-force-apr { off |on }**

Optical safety on EDFA2 card

This section explains how optical safety mechanisms on EDFA2 cards protect users and equipment, and ensure system recovery during fiber breaks or unsafe conditions.

The optical safety mechanism applies to various components of the EDFA2 card, such as BST2 and PRE amplifiers, ensuring safe power levels and facilitating system recovery across different configurations and scenarios.

The BST1 amplifier is an internal booster within the card and does not require safety considerations because no LC fiber is connected to an external connector. This design eliminates any risk of harm to people or damage to property, so BST1 amplifier does not require optical safety measures.

When you enable the optical safety mode through the CLI command, the optical safety feature manages these main functionalities:

- **EDFA Laser shutdown**: If a fiber break occurs on the network, a network safety mechanism is implemented through the automatic laser shutdown (ALS). The ALS automatically shuts down the laser output power of amplifiers BST2 and PRE contained in the EDFA2 card.
- **EDFA Laser restart**: This depends on:
  - The condition of the optical input.
  - The provisioned safety operative mode and port status.

Optical safety on the BST2 amplifier

This section explains describes the safety mechanisms in BST2 amplifiers, the key components involved, and outlines the shutdown and automatic restart processes to prevent hazardous exposure to laser emissions.

Optical safety on the BST2 amplifier in the Line-TX side, involves implementing the shutdown and automatic restart of the amplifier to prevent hazardous exposure to laser emissions.

BST2 amplifier shutdown process

The BST2 shutdown process outlines the step-by-step sequence of powering down the amplifiers.

Figure 17: BST2 shutdown sequence

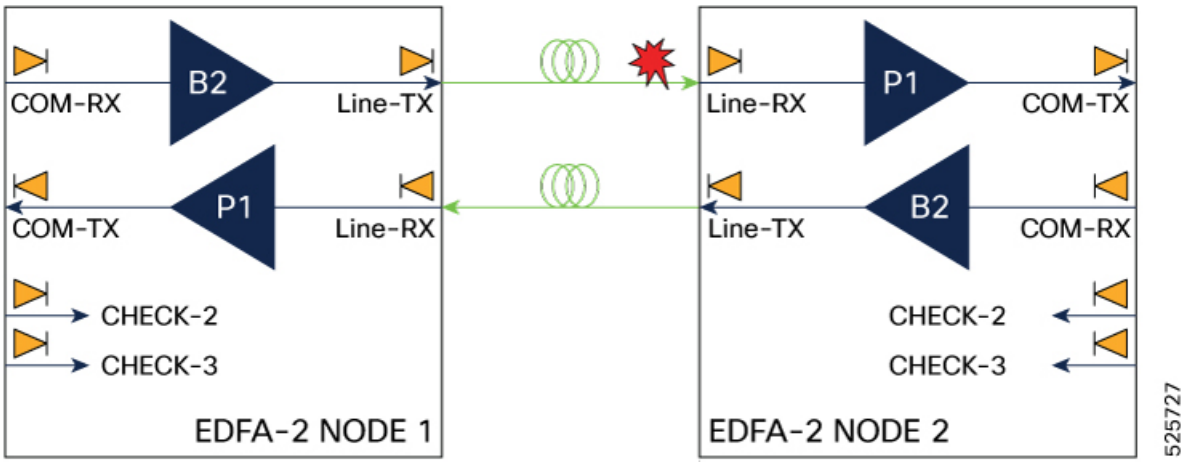

Figure 18: LOC alarm generation

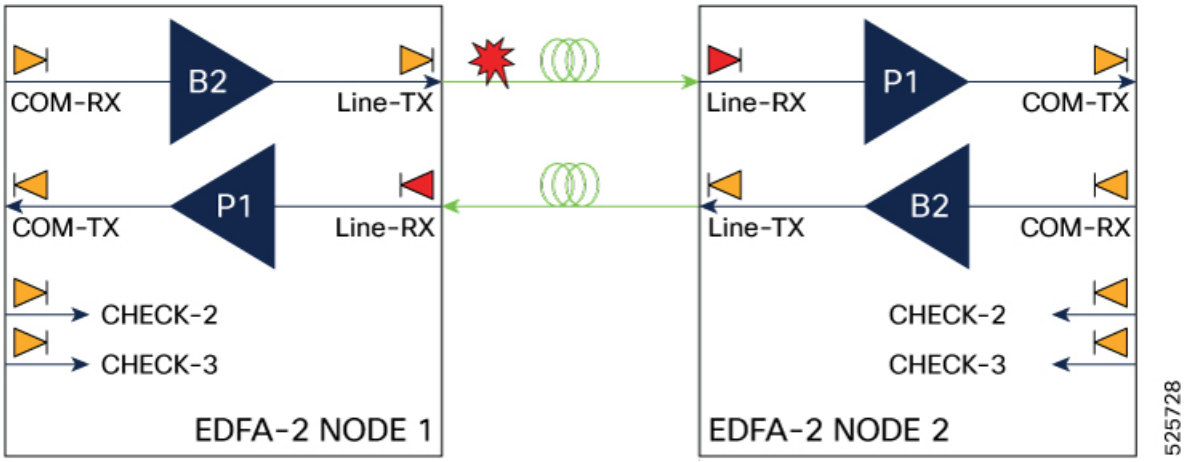

1. Fiber is cut from Node1 to Node2.
2. In Node2, the Line-RX photodiode detects an LOS-P event. After 50 ms of soaking, the ALS mechanism shuts down the B2 amplifier in Node2.

> **Note**
>
> When a fiber cut occurs, both the communication channels and the OSC signal are lost, leading to an LOC alarm. However, if only the communication channels are lost and the OSC signal remains intact, an LOS-P) alarm is triggered.

3. This in turn causes a LOS-P event detected by the Node 1 Line-RX photodiode. After 50 ms of soaking, B1 in Node1 shuts down.
4. No power is present on the open fiber.

BST2 amplifier restart process

During amplifier restart, the system operates in pulse mode with Automatic Power Reduction (APR) activated. This ensures the Hazard Level 1 power limit is not exceeded while allowing safe system recovery.

1. At this point, the Line-TX port in Node 1 attempts to establish communication to Line-RX in Node 2 by emitting a pulse. The pulse cycle consists of 100 seconds with the laser off, followed by 5 to 15 seconds with the laser on at an output power of +8 dBm.
2. The Line-RX port in Node1 waits for a similar pulse in response from the Line-TX port of Node 2.
3. If no response is received within some seconds, the Node 1 tries again and again until it receives a response pulse from Line-TX port of Node2, indicating the system failure is corrected and full continuity in the fiber between the two ends exists.
4. The Node 1 amplifier operates in pulse mode at a reduced power level. It emits a laser pulse with an automatic power reduction to +20 dBm. This level assures that Hazard Level 1 is not exceeded, for personnel safety, even though the establishment of successful OSC communication is assurance that any broken fiber is fixed.
5. If Line-TX port of Node2 amplifier responds with a longer pulse within a particular duration, both amplifiers are changed from pulse mode at reduced power to normal operating power mode.

Optical safety on the PRE amplifier

This section explains the key optical safety mechanisms and schema layouts used with PRE amplifiers to ensure safe operation and shutdown.

PRE amplifier safety schema

In the context of PRE amplifier, the devices that receive its signal are demultiplexers. These are external components that require fiber connections. To ensure safety, they must be connected between the EDFA and the Demux monitor port. Therefore, the safety schema shown in these images is essential.There are two type of safety schema layouts:

- **Double passive layout**: Utilizes both passive modules, NCS1K-MD-32O-CE and NCS1K-MD-32E-CE.

  Figure 19: EDFA2 with double passive layout

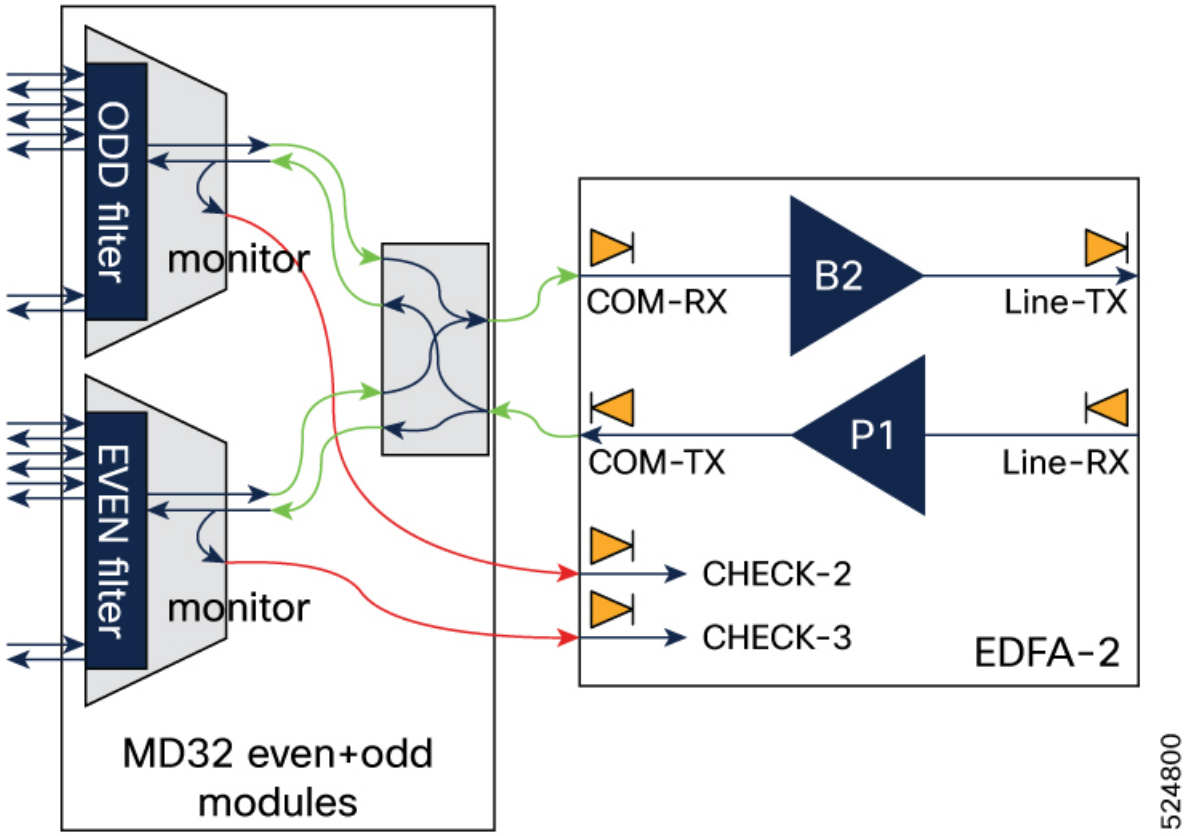

- **Single passive layout**: Utilizes one of the passive modules

  Figure 20: EDFA2 with single passive layout

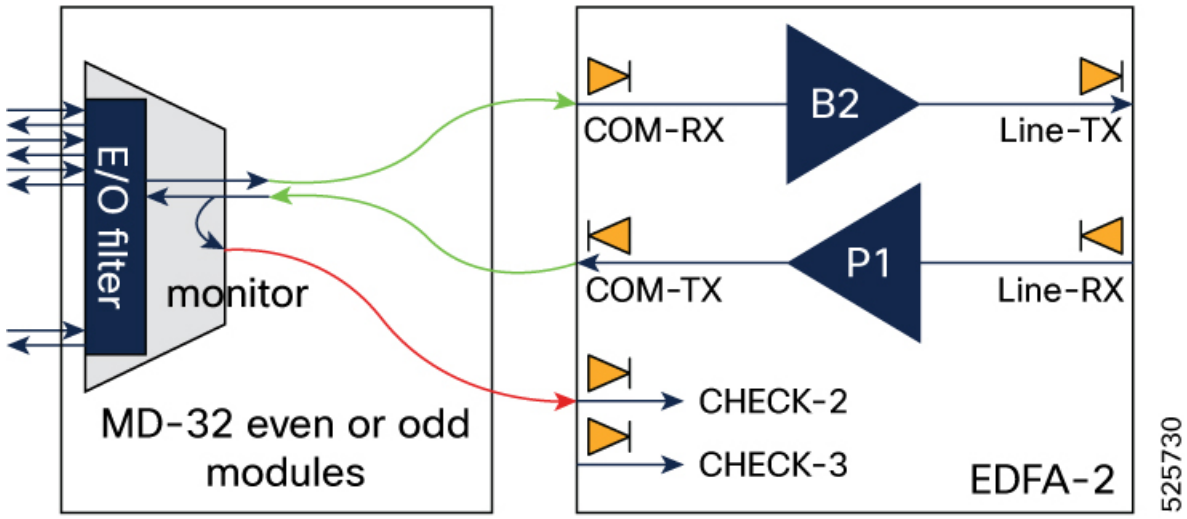

Safety schema implementation

To detect any open connection between the PRE amplifier output and the COM RX port on the passive module, connect the monitor ports on passive modules to the CHECK-RX ports of the EDFA2 card using cables indicated by red links.

- **Double passive module setup**: When both NCS1K-MD-32O-CE and NCS1K-MD-32E-CE modules are present, connect loopbacks between their monitor ports using the two check ports.
- **Single Passive Module Setup**: If only one module (either ODD or EVEN) is present, connect a single loopback to one check port and shut down the other port.

PRE amplifier shutdown behavior

> **Note**
>
> Only the CHECK ports that are configured as In-Service (IS) participate in PRE amplifier safety operations.

- **Double passive layout** : Both ports must be configured as IS. The PRE amplifier shuts down only if one of the CHECK-2 and CHECK-3 ports detect power below the threshold.
- **Single passive layout**: The EDFA2 CHECK2 port connected to the MD32 MON-E-DMX port must be configured as IS, while the other CHECK port should be Out of Service (OOS).
  - The PRE amplifier shuts down when the CHECK2 port in IS detects power below the threshold.
  - When both CHECK 2 and CHECK 3 ports are Out of Service (OOS), the PRE amplifier remains on, maintaining a power level of up to 20 dBm.

PRE amplifier restart procedure

To restart the PRE amplifier, create a loop connection between the Demux monitor port and one of the CHECK ports. After shutdown, the PRE amplifier can return to operation based on the loop connection evaluation to determine if one or both ports need to be alarm-free before restarting.

1. The PRE amplifier activates in APR mode with output power set to a safe level of 8 dBm.
2. The check starts with an 8-second APR pulse. If power is present on the CHECK port at the end, a Verification Phase (VP) begins:

- Two off/on cycles are performed, monitoring expected alarm transitions.
  - **Double passive layout** : The alarm pattern must be detected on both CHECK2 and CHECK3 ports for PRE amplifier restart.
  - **Single passive layout**: The alarm pattern must be detected only on the CHECK port configured as IS.
- Alarm transitions during cycles are verified to ensure proper responses. If transitions are not as expected, the process pauses, retrying after 100 seconds

The restart procedure is completely safe because PRE amplifier is operating at low power level (APR).

This picture demonstrates PRE amplifier power levels and alarm levels during a successful restart and subsequent shutdown event.

Figure 21: PRE amplifier restart process

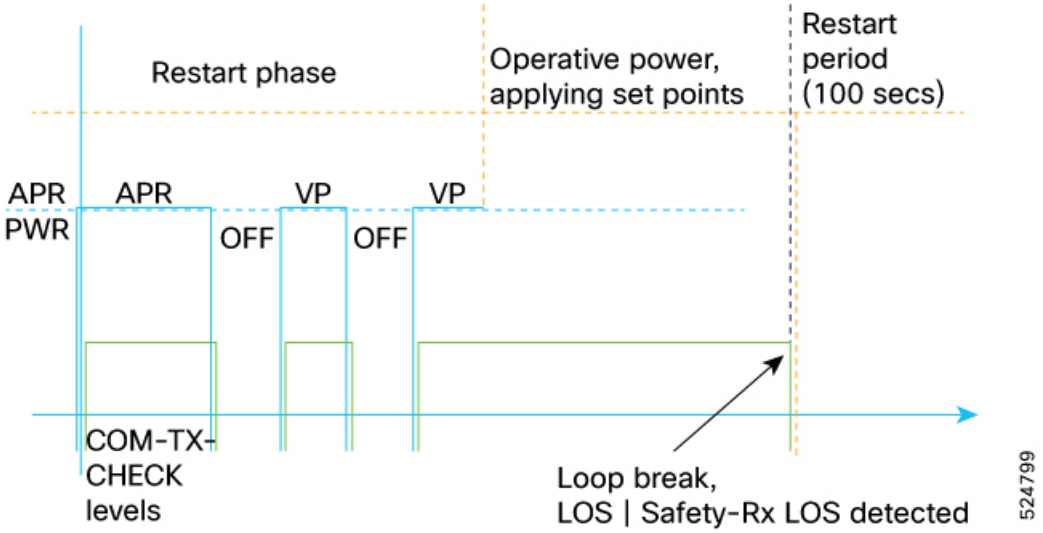

Configure optical safety for the EDFA2 card

Use this procedure to configure safety parameters to manage and secure optical amplification on EDFA2 card ports.

Use this task to configure various optical safety parameters on the COM-TX and LINE-TX ports of the EDFA2 card.

The optical safety parameters are:

Table 86: Optical safety parameters

Parameters	Description
egress-ampli-safety-control-mode	Configures the safety mode. The available options are: • auto: This is the default option. • disabled: Use this option to work in ALS disabled mode where the EDFA maximum output power is clamped to 20dBm.

Parameters	Description
egress-ampli-osri	Configures the Optical Safety Remote Interlock (OSRI). Use the no form of the command to disable OSRI. The OSRI will turn off the EDFA, regardless of any power settings, regular configurations, or other maintenance settings, such as force APR or safety mode disable.
egress-ampli-force-apr	Forces the Automatic Power Reduction (APR). The available options are: • off: This is the default option and re-enables the safety check mechanism starting from the Laser OFF condition. • on: Use this option to forcibly enable the EDFA pump lasers, regardless of safety mode and LOS alarms. It also maintains the EDFA output power at a constant 'safe' level of +8 dBm.

Procedure

1. Use the command **controller Ots** *R/S/I/P* **egress-ampli-safety-control-mode {auto | disabled}** to enable or disable the optical safety mode on the EDFA2 card.

   Example:

   Enable and disable safety-control-mode on BST2 amplifiers (LINE-TX port):

   ```
   RP/0/RP0/CPU0:ios(config)#controller ots 0/0/0/0
   egress-ampli-safety-control-mode auto
   ```

   ```
   RP/0/RP0/CPU0:ios(config)#controller ots 0/0/0/0
   egress-ampli-safety-control-mode disabled
   ```

   Enable and disable safety-control-mode on PRE amplifier (COM-TX port):

   ```
   RP/0/RP0/CPU0:ios(config)#controller ots 0/0/0/1
   egress-ampli-safety-control-mode auto
   ```

   ```
   RP/0/RP0/CPU0:ios(config)#controller ots 0/0/0/1
   egress-ampli-safety-control-mode disabled
   ```

2. Use the command **controller Ots** *R/S/I/P* **no shutdown | shutdown}** to configure the transport administration state on the CHECK-2 and CHECK-3 ports of the EDFA2 card, for PRE1 amplifier safety.

   Example:

When both the CHECK ports are connected to the monitor ports of the NCS1K-MD-32O-CE and NCS1K-MD-32E-CE passive modules:

```
RP/0/RP0/CPU0:ios(config)#controller ots 0/0/0/2 no shutdown
```

```
RP/0/RP0/CPU0:ios(config)#controller ots 0/0/0/3 no shutdown
```

When any one of the passive modules, configure one port as in- service and other port as out-of-service.

```
RP/0/RP0/CPU0:ios(config)#controller ots 0/0/0/2 no shutdown
```

```
RP/0/RP0/CPU0:ios(config)#controller ots 0/0/0/3 shutdown
```

3. If you want to enable the OSRI on the EDFA2 card, use the **controller Ots** *R/S/I/P* **egress-ampli-osri** command.

   Example:

   Enable and disable OSRI on BST2 amplifiers (LINE-TX port):

```
RP/0/RP0/CPU0:ios(config)#controller ots 0/0/0/0 egress-ampli-osri
```

```
RP/0/RP0/CPU0:ios(config)#no controller ots 0/0/0/0 egress-ampli-osri
```

   Enable and disable OSRI on PRE amplifier (COM-TX port):

```
RP/0/RP0/CPU0:ios(config)#controller ots 0/0/0/1 egress-ampli-osri
```

```
RP/0/RP0/CPU0:ios(config)#no controller ots 0/0/0/1 egress-ampli-osri
```

4. If you want to force APR or disable the APR, use the command **controller Ots** *R/S/I/P* **egress-ampli-force-apr { off | on }** to enable or disable the APR on the EDFA2 card.

   Example:

   Enable and disable APR on amplifiers (LINE-TX port):

```
RP/0/RP0/CPU0:ios(config)#controller ots 0/0/0/0 egress-ampli-force-apr on
```

```
RP/0/RP0/CPU0:ios(config)#controller ots 0/0/0/0 egress-ampli-force-apr off
```

   Enable and disable APR on PRE amplifier (COM-TX port):

```
RP/0/RP0/CPU0:ios(config)#controller ots 0/0/0/1 egress-ampli-force-apr on
```

```
RP/0/RP0/CPU0:ios(config)#controller ots 0/0/0/1 egress-ampli-force-apr off
```

Verify the optical safety configurations on the EDFA2 card

Use this procedure to verify the optical safety parameters configured on the COM-TX and LINE-TX ports of the EDFA2 card.

Use this task to verify various optical safety parameters configured on the COM-TX and LINE-TX ports of the EDFA2 card.

Procedure

Use the **show controllers ots** *R/S/I/P* to verify the optical safety parameters configured on the COM-TX and LINE-TX ports of the EDFA2 card.

Example:

Verify the safety parameters configured on the BST2 amplifiers (LINE-TX port):

```
RP/0/RP0/CPU0:ios#show controllers ots 0/0/0/0
Tue Feb 25 14:40:05.324 IST

 Controller State: Up

 Transport Admin State: In Service

 LED State: Green

 Last link flapped: 3d20h

        Alarm Status:
        -------------
        Detected Alarms: None


        Alarm Statistics:
        -----------------
        RX-LOS-P = 1
        RX-LOC = 1
        TX-POWER-FAIL-LOW = 0
        INGRESS-AUTO-LASER-SHUT = 0
        INGRESS-AUTO-POW-RED = 0
        INGRESS-AMPLI-GAIN-LOW = 0
        INGRESS-AMPLI-GAIN-HIGH = 0
        EGRESS-AUTO-LASER-SHUT = 0
        EGRESS-AUTO-POW-RED = 1
        EGRESS-AMPLI-GAIN-LOW = 0
        EGRESS-AMPLI-GAIN-HIGH = 0
        HIGH-TX-BR-PWR = 0
        HIGH-RX-BR-PWR = 0
        SPAN-TOO-SHORT-TX = 0
        SPAN-TOO-SHORT-RX = 0
        INGRESS-AMPLI-LASER-OFF = 0
        EGRESS-AMPLI-LASER-OFF = 0

        Parameter Statistics:
        ---------------------
        Total Rx Power = -5.11 dBm
        Total Tx Power = 3.40 dBm
        Rx Signal Power = -5.82 dBm
        Tx Signal Power = -0.31 dBm
        Tx Voa Attenuation = 9.2 dB
        Egress Ampli Mode = Gain
        Egress Ampli Gain = 23.0 dB
```

```
        Egress Ampli Tilt = 0.0 dB
        Egress Ampli Safety Control mode = auto
        Egress Ampli OSRI = OFF
        Egress Ampli Force APR = OFF
        Egress Ampli BR Power = -18.73 dBm
        Egress Ampli BR Ratio = -18.40 dB



        Configured Parameters:
        -------------
        Tx Voa Attenuation = 0.0 dB
        Egress Ampli Mode = Gain
        Egress Ampli Gain = 23.0 dB
        Egress Ampli Power = -2.0 dBm
        Egress Ampli Tilt = 0.0 dB
        Egress Ampli Safety Control mode = auto
        Egress Ampli OSRI = Off
        Egress Ampli Force APR = off
                 BR High Threshold = 0.0 dBm
```

Verify the safety parameters configured on the PRE amplifier (COM-TX port):

```
RP/0/RP0/CPU0:ios##show controllers ots0/0/0/1
Wed Oct  2 16:47:25.596 UTC

 Controller State: Up

 Transport Admin State: In Service

 LED State: Green

        Alarm Status:
        -------------
        Detected Alarms: None


        Alarm Statistics:
        -----------------
        RX-LOS-P = 0
        RX-LOC = 0
        TX-POWER-FAIL-LOW = 0
        INGRESS-AUTO-LASER-SHUT = 0
        INGRESS-AUTO-POW-RED = 0
        INGRESS-AMPLI-GAIN-LOW = 0
        INGRESS-AMPLI-GAIN-HIGH = 0
        EGRESS-AUTO-LASER-SHUT = 0
        EGRESS-AUTO-POW-RED = 0
        EGRESS-AMPLI-GAIN-LOW = 0
        EGRESS-AMPLI-GAIN-HIGH = 0
        HIGH-TX-BR-PWR = 0
        HIGH-RX-BR-PWR = 0
        SPAN-TOO-SHORT-TX = 0
        SPAN-TOO-SHORT-RX = 0

        Parameter Statistics:
        ---------------------
        Total Rx Power = -11.89 dBm
        Total Tx Power = 3.99 dBm
```

```
        Tx Voa Attenuation = 1.0 dB
        Ingress Ampli Mode = Gain
        Ingress Ampli Gain = 8.0 dB
        Ingress Ampli Gain Range = Normal
        Egress Ampli Mode = Power
        Egress Ampli Gain = 19.0 dB
        Egress Ampli Tilt = 0.0 dB
        Egress Ampli Gain Range = Normal
        Egress Ampli Safety Control mode = auto
        Egress Ampli OSRI = OFF
        Egress Ampli Force APR = OFF
        Egress Ampli BR Power = -20.20 dBm
        Egress Ampli BR Ratio = -24.20 dB



        Configured Parameters:
        -------------
        Tx Voa Attenuation = 1.0 dB
        Ingress Ampli Gain = 8.0 dB
        Ingress Ampli Gain Range = Normal
        Egress Ampli Mode = Gain
        Egress Ampli Gain = 21.0 dB
        Egress Ampli Power = -5.0 dBm
        Egress Ampli Tilt = 0.0 dB
        Egress Ampli Gain Range = Normal
       Egress Ampli Safety Control mode = auto
        Egress Ampli OSRI = off
        Egress Ampli Force APR = off
        BR High Threshold = -17.0 dBm
```

The entries highlighted in bold show the optical safety parameters configured.

Troubleshooting EDFA-BST2 and pre-amplifier EDFA

This section lists the issues observed with EDFA-BST2 (booster amplifier) and pre-amplifier EDFAs, including symptoms, causes, and recommended resolutions.

Troubleshoot the booster amplifier (EDFA-BST2) issues

When the BST2 amplifier switches off for safety reasons, follow these steps to diagnose and resolve the issue:

1. **Disable the safety feature on BST2:** Set the safety disable option on the BST2 amplifier to allow for further investigation and configuration.Disable the safety feature on the BST2 amplifier to allow further investigation and configuration.
2. **Check the received power value:**
   - Examine the received power on the RX line of the remote node (the node where the fiber span physically terminates at BST2).
   - Compare the observed value with the expected operational thresholds.
3. **Analyze threshold and power values:**
   - If the observed RX power is below the threshold but matches expected operational values:
     - Reconfigure the threshold to align with the expected RX power.

- If the observed RX power and Total RX Power are both -40 dBm:
  - This indicates a physical fiber interruption between the two sites. Inspect the fiber span for possible damage or disconnection.

Troubleshoot the pre-amplifier EDFA issues

When the Pre-Amplifier switches off for safety reasons, follow these steps:

1. **Disable safety mode on the pre-amplifier:** set the safety disable option on the pre-amplifier.
2. **Verify received power on CHECK-2 and CHECK-3 ports:**Check the power levels received on both CHECK-2 and CHECK-3 ports.

   Note

   These are typically monitor ports on the demux, with an expected attenuation of approximately -20 dBm from the demux output.

3. **Analyze power levels:**
   - If power levels on both CHECK ports are below threshold, reset both thresholds to the correct values.
   - If optical power is present on only one CHECK port but should be present on both, check the physical connection between the CHECK port (alarmed) and its corresponding demux monitor port.
   - If optical power is present on only one CHECK port as expected (e.g., only one mux/demux is connected), shut down the CHECK port that is not in use (to avoid unnecessary alarms).
4. **Restore safety mode:**Once the checks and adjustments are complete, set the Pre-Amplifier safety mode back to automatic.

   Note

   If you need to operate with the safety feature disabled, both CHECK ports must be configured in shutdown mode.

13 Span Loss

Topics:

- Span loss
- Signal span loss control

This section provides details on how span loss is measured between nodes, how thresholds trigger alarms, and the CLI commands involved.

Table 87: Feature History

Feature Name	Release Information	Feature Description
Span loss measurement	Cisco IOS XR Release 25.1.1	NCS 1014 measures span loss between two nodes. The measurement is performed using the OSC links created between the nodes by configuring the OSC pluggable to be operational and OSPFv2 protocol on the EDFA2 card on the nodes. These measurements are essential during network changes, like equipment installation or fiber repairs. You can configure both minimum and maximum span loss thresholds. If the received span loss exceeds the maximum threshold or falls below the minimum threshold, the system will trigger a SPAN-LOSS-OUT-OF-RANGE alarm. CLI commands are: • **optical-line-control** • **controller Ots** *R/S/I/P* **span-loss min** *value* • **controller Ots** *R/S/I/P* **span-loss min** *value*

Span loss

This section explains the types, calculation methods, and reporting for span losses in optical networks.

Span loss is the optical signal loss over a fiber span between two network nodes. It is measured by comparing power levels at the transmitting (Tx) and receiving (Rx) ports, typically in decibels (dB). If span loss exceeds thresholds, alarms like "Span Loss Value Out Of Range" are triggered.

Span loss calculations

The span loss calculation is an automatic process for determining span losses between NCS 1014 nodes. The span loss verification algorithm calculates span loss by comparing power measurements at the line TX/RX port at the far-end and the line RX/TX port at the near end. If the span loss is not within configured thresholds, the algorithm raises the "Span Loss Value Out Of Range" alarm.

Span loss reporting

The span loss application periodically reports the span loss value for a span every few seconds. If there are changes in span loss, such as those caused by variations in fiber loss, the application typically updates the span loss value between 10 to 30 seconds after the value has stabilized.

Span loss verification reports these values:

- **OSC span loss**
- **Signal span loss**
- **Span loss**

OSC span loss

RX OSC span loss: This is the difference between the received OSC signal power at the near end and the transmitted OSC signal power at the far-end. It refers to the fiber entering the LINE RX port.

TX OSC span loss: This is the difference between the transmitted OSC signal power at the near end and the received OSC signal power at the far-end. It refers to the fiber exiting the LINE TX port.

Signal span loss

RX signal span loss: This is the difference between the received C-band signal power at the near end and the transmitted C-band signal power at the far-end. It refers to the fiber entering the LINE RX port.

TX signal span loss: This is the difference between the transmitted C-band signal power at the near end and the received C-band signal power at the far-end. It refers to the fiber exiting the LINE TX port.

Span loss

RX span loss: This measurement is the difference between the received total power at near-end and transmitted total power at far-end.

TX span loss: This measurement is the difference between the transmitted total power at near-end and received total power at far-end.

Configure span loss thresholds

Use this procedure to configure span loss thresholds on OTS controllers to monitor optical signal loss and generate alarms if values are outside the acceptable range.

Use this task to configure span loss thresholds

Before you begin

Establish the OSC link using OSPFv2.`

Procedure

1. Use the commands **optical-line-control** and **controller ots** *R/S.I/P* to enter the optical applications configuration mode and select the controller on which the span loss thresholds need to be configured.

   The span loss can be configured only controller ots on R/S/I/0.

   Example:

```
RP/0/RP0/CPU0:ios(config)#optical-line-control
RP/0/RP0/CPU0:ios(config-olc)#controller ots 0/0/0/0
```

2. Use the keywords **span-loss min** *value* and **span-loss max** *value*, to configure the minimum and maximum span loss threshold values.

   Example:

```
RP/0/RP0/CPU0:ios(config-olc-ots)#span-loss min 0
RP/0/RP0/CPU0:ios(config-olc-ots)#span-loss max 420
```

   The example sets the minimum threshold to 0.0 dB and the maximum threshold to 42.0 dB.

   The system raises a SPAN-LOSS-OUT-OF-RANGE alarm when 'Rx span loss' is greater than the maximum threshold or lesser than the minimum threshold.

3. Commit the changes and exit all the configuration modes.

   Example:

```
RP/0/RP0/CPU0:ios(config-olc-ots)#commit
RP/0/RP0/CPU0:ios(config-olc-ots)#exit
RP/0/RP0/CPU0:ios(config-olc)#exit
RP/0/RP0/CPU0:ios(config)#
```

View the span loss measurements

Use this procedure to configure span loss thresholds on OTS controllers to monitor optical signal loss and generate alarms if values are outside the acceptable range.

Use this task to view the various span loss measurements.

Procedure

Use the **show olc span-loss** command to view the various span loss measurements.

Example:

```
RP/0/RP0/CPU0:ios#show olc span-loss
                        Wed Feb 19 14:20:12.542 IST

                        Controller                                : Ots0/0/0/0
```

```
                        Neighbour RID                           : 192.0.2.20

                            Rx Span Loss                            : 12.92
dB
                            Rx OSC Span Loss                        : 13.41
dB
                            Rx Signal Span Loss                     : 12.95
dB
                            Tx Span Loss                            : 13.67
dB
                            Tx OSC Span Loss                        : 14.52
dB
                            Tx Signal Span Loss                     : 13.65
dB
```

The entries, highlighted in bold, show the span loss measurements.

Verify span loss configurations

Use this procedure to verify the configured span loss threshold values on the optical line controller.

Use this task to verify the span loss configurations.

Procedure

Verify the configured values using the **show running-config optical-line-control controller ots** command.

Example:

```
RP/0/RP0/CPU0:ios##show running-config optical-line-control controller ots
0/0/0/0
                        Wed Oct  2 15:57:22.576 UTC
                        optical-line-control
                        controller ots 0/0/0/0
                        span-loss max 420
                            span-loss min 0
                        !
                        !
```

The entries, highlighted in bold, show the values of span loss thresholds configured.

Signal span loss control

This section explains how signal span loss control mechanisms set expected thresholds, monitor loss changes, and trigger alarms to enhance optical link reliability.

The signal span loss control is a funtionality that

- enables you to set the expected and threshold values for span loss in a link,
- monitors changes in the signal span loss in RX direction, and

- raises span loss alarms.

Table 88: Feature History

Feature Name	Release Information	Feature Description
MOLS2.0 Signal Span Loss Control Enhancement	Cisco IOS XR Release 25.4.1	

Feature Name	Release Information	Feature Description

		The enhanced signal span loss control enables you to set the expected and threshold values for managing RX signal span loss.
		
		The enhancement enables the line system to:
		
		• monitor the change in RX signal span loss value,
		• compare the current and expected RX signal span loss values,
		• check if the span loss difference is within the set threshold values, and
		• raise the relevant alarms, if the span loss difference is more than the threshold values.
		
		New CLI parameters added for span-loss attribute on the LINE OTS controller are:
		
		• **rx-expected-span-loss**
		• **rx-exp-rel-thr-deg <10...420>**
		• **rx-exp-rel-thr-fail <10...420>**
		
		To enable the expected RX signal span loss:
		
		`rx-expected-span-loss`
		
		To disable the expected RX signal span loss:
		
		`no span-loss rx-expected-span-loss`
		
		Modified YANG models are:
		
		• Native YANG Model - **Cisco-IOS-XR-olc-cfg.yang**
		• Open Config model - **openconfig-transport-line-common.yang**
		
		New alarms are introduced:
		
		• **OLC_SPAN_LOSS_FM_RX_SIGNAL_DEGRADE** - Rx signal span loss degraded
		• **OLC_SPAN_LOSS_FM_RX_SIGNAL_FAIL** - Rx signal span loss failed

> **Note**
>
> In R2541, signal span loss control is supported only in the RX direction in the link.

Signal span loss baseline and thresholds

Signal span loss baselines and thresholds indicate the reference value and measurement limits for signal loss in optical links. They enable automatic alarm triggering if measured loss deviates from configured expectations.

A signal span loss baseline is the currently measured signal span loss value in the optical link that is

- stored automatically when you configure the expected span loss during initial setup, and
- updated when you reconfigure the expected span loss after fiber repair or link design changes.
- used as the reference for evaluating threshold alarms.

Expected signal span loss is the span loss that you find ideal for the network design.

Measured signal span loss refers to the RX signal span loss that is measured immediately after the RX expected span loss is configured for the network.

Signal span loss thresholds

Signal span loss thresholds define the expected degrade and fail ranges. If the measured RX signal span loss falls outside these thresholds, a corresponding alarm is triggered. The two signal span loss thresholds are:

- **RX signal span loss degrade**: Sets the degrade threshold range for the measured RX signal span loss. The threshold range is calculated based on the configured expected signal span loss. When the measured RX signal span loss falls outside of this range, the system triggers the RX signal span loss degrade alarm. The RX signal degrade threshold can be changed with a new expected signal span loss.
- **RX signal span loss fail**: Sets the fail threshold range for the measured RX signal span loss. The threshold range is calculated based on the configured expected signal span loss. When the measured RX signal span loss falls outside of this range, the system triggers the RX signal span loss fail alarm. The RX signal fail threshold can be changed with a new expected signal span loss.

Key characteristics of signal span loss baseline and thresholds

- saves the newly measured RX signal span loss as a baseline value each time the expected span loss value is changed.
- enables configuration of span loss degrade and fail thresholds on Line OTS controller.
- compares the prevailing RX signal span loss and the configured RX expected signal span loss values whenever there is a change in RX signal span loss value.

> **Note**
>
> Initially, the RX expected signal span loss value is set based on the planning tool design or updated to reflect the newly measured span loss after a fiber cut and repair.

Setting expected span loss degrade and fail

In your network,

1. If RX expected signal span loss is set to **11.0 dB**, the system measures the immediate RX signal span loss and saves this value as the baseline.
2. **RX span loss degrade range = RX expected span loss ± RX expected span loss degrade**

   If RX expected span loss degrade threshold is set to **6.0 dB,** the system defines the acceptable degrade range as **±6.0 dB** around the expected signal span loss. Therefore, the valid degrade threshold range is from **5.0 to 17.0 dB**. If the measured RX signal span loss is more than **5.0 dB** and less than **17.0 dB**, then there is no degrade alarm. If the measured RX signal span loss falls outside this range, a degrade alarm is triggered.
3. **RX span loss fail range = RX expected span loss ± RX expected span loss fail**

   If RX expected span loss fail threshold is set to **5.0 dB**, the system defines the acceptable fail range as **±5.0 dB** around the expected signal span loss. Therefore, the valid fail threshold range is from **6.0 to 16.0 dB**. If the measured RX signal span loss is more than **6.0 dB** and less than **16.0 dB**, then there is no fail alarm. If the measured RX signal span loss falls outside this range, a fail alarm is triggered.

> **Note**
>
> The degrade and fail alarms have a hysteresis of **0.5 dB**. For example, if the fail threshold is **5 dB** and the alarm is active, the alarm will clear only when the difference between the expected and measured span loss drops below **4.5 dB**.

> **Note**
>
> The degrade and fail alarms are mutually exclusive. If the span loss fail threshold is crossed, the degrade alarm is cleared and the fail alarm is raised.

Configure RX signal span loss for MOLS 2.0

Use this procedure to configure the span loss expected value and thresholds for MOLS 2.0 links to monitor optical fiber performance and detect signal loss.

This procedure enables you to set the expected and threshold values for RX signal span loss.

Follow these steps to configure the span loss baseline and its thresholds to monitor span loss.

Before you begin

- Line system is physically connected, powered on, and its components are provisioned.

- Fiber type is provisioned.
- Amplifier APC is enabled.

Enter the configuration mode using the `configure` command.

Procedure

1. Enter optical applications configuration mode and select the controller using **optical-line-control controller ots** *R/S/I/P*

   The span loss can be configured only on OTS controller R/S/I/0.

   Example

   ```
   RP/0/RP0/CPU0:ios#configure
   Mon Sep 18 13:11:53.812 UTC
   RP/0/RP0/CPU0:ios(config)#optical-line-control controller Ots 0/0/0/0
   ```

2. Enable the expected span loss value using **span-loss rx-expected-span-loss**.

   Example

   ```
   RP/0/RP0/CPU0:ios(config-olc-ots)#span-loss rx-expected-span-loss 65
   ```

   The RX expected span loss is configured as **6.5 dB** and the measured span loss is stored automatically as the baseline.

3. Set the degrade and fail threshold values for expected Rx signal span loss.

   Example

   > **Note**
   >
   > By default, **span-loss rx-exp-rel-thr-deg** and **span-loss rx-exp-rel-thr-fail** are set to **3.0 and 5.0 dB** respectively.

   ```
   RP/0/RP0/CPU0:ios(config-olc-ots)#span-loss rx-exp-rel-thr-deg 40
   RP/0/RP0/CPU0:ios(config-olc-ots)#span-loss rx-exp-rel-thr-fail 60
   RP/0/RP0/CPU0:ios(config-olc-ots)#commit
   ```

   The OTS controller commands consider the inputs to one decimal place for the parameter values. Here, the system sets the **span-loss rx-exp-rel-thr-deg** as **4.0 dB** and **`span-loss rx-exp-rel-thr-fail`** as **6.0 dB**.

4. Verify the saved baseline, threshold, and current values using **show olc span-loss baseline**.

   Example

   ```
   RP/0/RP0/CPU0:ios#show olc span-loss baseline controller ots 0/0/0/0

   Controller                                        : Ots0/0/0/0
   Neighbour RID                                     : 1.1.1.2
   Baseline Timestamp                                : 2025-06-17 18:00:07

   Rx Expected Span Loss Rel Thr Deg                 : 4.00 dB
   ```

```
Rx Expected Span Loss Rel Thr Fail                : 6.00 dB
Rx Expected Span Loss                             : 6.50 dB
Rx Signal Span Loss                               : 6.56 dB
Rx Calibration Baseline Signal Span Loss          : 6.53 dB
```

5. (Optional) Disable the expected span loss setting.

   Example

   ```
   RP/0/RP0/CPU0:ios(config-olc-ots)# no span-loss rx-expected-span-loss
   ```

   Disabling this setting clears all outstanding alarms but retains the **calibration-baseline-span-loss** value.

The system uses the configured threshold values to monitor span loss. Alarms are triggered if loss exceeds the set thresholds.

What to do next

Review alarm status, monitor signal degradation, and adjust baseline values as needed.

14 Channel APC

Topics:

- Channel APC
- View channel APC information

This section provides details about channel APC functionality, supported hardware, and automatic power control mechanisms.

This chapter describes channel APC.

Table 89: Feature History

Feature Name	Release Information	Feature Description
Automatic Power Control support for NCS1K14-EDFA2	Cisco IOS XR Release 25.2.1	Automatic power control maintains all channels at a consistent Power Spectral Density (PSD) target by regulating optical components. It keeps all channels at the same Power Spectral Density (PSD) target, ensuring equalized channel power regardless of different input powers. It compensates for changes in span loss over time by adjusting amplifier gain and variable optical attenuator (VOA) attenuation, maintaining stable total transmit and receive power.

Channel APC

This section explains how Channel APC regulate optical channels to maintain consistent power spectral density before transmission.

From Release 25.2.1, Channel APC is supported on the EDFA2 card. It is an optical application that maintains all optical channels at a consistent Power Spectral Density (PSD) target by dynamically regulating optical components. This ensures a flat spectrum before transmission over the fiber span.

The purpose of the Channel APC control loop is to equalize the Power Spectral Density (PSD) of all channels to a defined Channel Target PSD.

- **Channel Target PSD:**

  This is an optical-line-control (OLC) configuration parameter that defines the desired PSD level for all channels. By default, this value is -20 dBm, measured in dBm/12.5GHz.

- **Optical Channel Monitor (OCM):**

  The OCM device provides readings of the channel power spectral density, dividing the spectrum into 6.25GHz slices. The Channel PSD is calculated based on readings from the OCM and is averaged over the central 25GHz bandwidth.

- **Input Channel Acceptance:**

  Before a channel is transmitted, its input PSD is evaluated against the Channel PSD target plus a defined margin (PSD_MARGIN). A channel is accepted and unblocked by the Wavelength Blocker (WB) if its estimated PSD after initial amplification and WB insertion loss is greater than the target PSD plus the margin.

- **PSD Control Loop:**

  Once a channel is accepted, the WB attenuation for the channel's slices is adjusted from maximum to an initial value calculated to bring the Channel PSD near or slightly below the target. The control loop then periodically monitors the Channel PSD at the WB output. If the discrepancy between the measured PSD and the target PSD exceeds a defined threshold (PSD Correction Tolerance), the WB attenuation is corrected incrementally. The loop continues until the discrepancy is small, applying a final correction equal to the residual error. The loop regulates again if the discrepancy later exceeds the threshold.

This diagram shows the NCS1K14-EDFA2 line card optical layout. Optical components controlled by channel APC are highlighted in green.

Figure 22: NCS1K14-EDFA2 line card optical layout

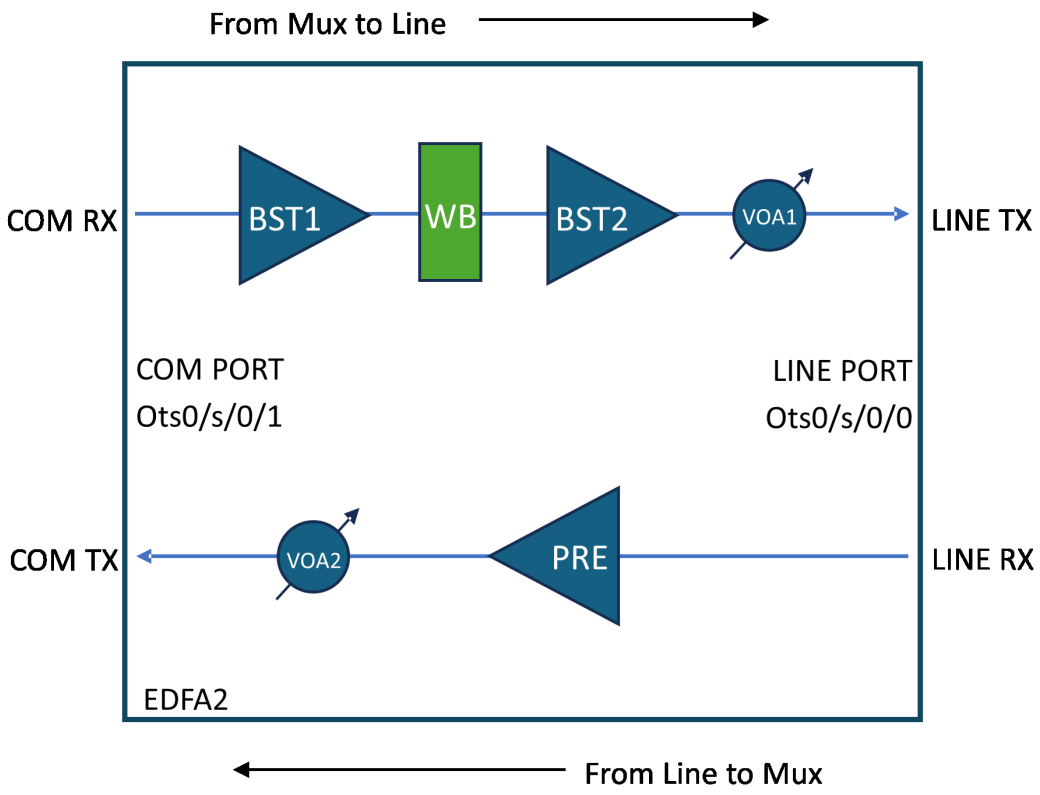

Channel Acceptance and Blocking Criteria

- **Acceptance:**
  - By default, WB blocks all C-band spectrum.
  - Channels must have PSD after WB (0 attenuation) higher than the target PSD plus a 0.5 dBm/12.5 GHz margin to be accepted.
- **Blocking:**
  - Channels with WB attenuation at 0 dB and PSD lower than target PSD minus 2.0 dBm/12.5 GHz tolerance are blocked by the control loop.

How channel APC works

This section describes how Channel APC automatically equalizes Power Spectral Density (PSD) across all channels, the key components involved in the control loop, and each major stage of operation.

Summary

Channel APC control loop equalizes the Power Spectral Density (PSD) of all channels to a defined Channel Target PSD.

Workflow

These stages describe channel APC process:

1. Input and Amplification:
   - Channels enter via Controller Ots0/<slot>/0/1 (COM-RX).
   - First stage amplification by BST1.

- Channel APC equalizes PSD across channels before the second stage amplifier (BST2 + VOA1).

2. Wavelength Blocker (WB):
   - Controls attenuation per 6.25 GHz slice (0 to 15 dB or full block).
   - Channel power equalization is based on a configurable Channel Target PSD (default: -20 dBm/12.5 GHz).
   - PSD is averaged over the central 25 GHz bandwidth from OCM measurements.
3. Channel APC Control:
   - When enabled, Channel APC overrides manual WB attenuation settings.
   - OSC channel is excluded from Channel APC control.

Enable channel APC

Use this procedure to configure channel Automatic Power Control (APC) to optimize optical line performance.

This topic describes how to enable channel APC.

This task describes how to configure channel APC. This configuration is in this topic:

- Enable channel APC

Procedure

Use the following commands to enable channel APC:

```
configure
optical-line-control
controller ots <Rack/Slot/Instance/Port>
channel-apc flat-psd-eq-mode
commit
end
```

Disable channel APC

Use this procedure to configure the controller to disable channel automatic power control (APC) using the CLI.

This topic describes how to disable channel APC.

This task describes how to configure channel APC. This configuration is in this topic:

- Disable channel APC

Procedure

Use the following commands to disable channel APC:

```
configure
optical-line-control
controller ots <Rack/Slot/Instance/Port>
no channel-apc flat-psd-eq-mode
```

```
commit
end
```

Pause channel APC

Use this procedure to pause the channel APC to temporarily halt automatic power control for an optical channel.

This topic describes how to pause channel APC.

This task describes how to configure channel APC. This configuration is in this topic:

- Pause channel APC

Procedure

Use the following commands to pause channel APC:

```
configure
optical-line-control
controller ots <Rack/Slot/Instance/Port>
channel-apc-pause
commit
end
```

Resume channel APC

Use this procedure to resume channel APC to restore automated power control after a pause.

This topic describes how to resume channel APC.

This task describes how to configure channel APC. This configuration is in this topic:

- Resume channel APC

Procedure

Use the following commands to resume channel APC:

```
configure
optical-line-control
controller ots <Rack/Slot/Instance/Port>
no channel-apc-pause
commit
end
```

Set target PSD for channel APC

Use this procedure to configure the target Power Spectral Density (PSD) for a channel using the optical line control APC feature.

This topic describes how to set target PSD for channel APC.

This task describes how to configure channel APC. This configuration is in this topic:

- Set target PSD for chanel

Procedure

Use the following commands to set target PSD for a channel:

```
configure
optical-line-control
controller ots <Rack/Slot/Instance/Port>
psd-target <value in dBm/12.5GHz>
commit
end
```

Example

This sample configuration sets the target PSD to -22 dBm/12.5 GHz:

```
configure
optical-line-control
controller ots 0/0/0/0
psd-target -220
commit
end
```

Configure input amplifier

Use this procedure to configure the BST1 amplifier gain and gain range according to the optical interface and input power scenario.

This topic describes how to configure channel APC.

In scenarios with low total input power, you must adjust BST1 amplifier gain and range. This table shows some typical scenarios:

Table 90: BST1 Amplifier Configuration

Optical Interfaces	Spacing	BST1 Total Input Power [dBm]	BST1 range	BST1 Gain [dB]
400ZR	75 GHz	0.2~2.3	Extended	18.5
mix 400ZR/800ZR	75/150 GHz	-5~0.2	Extended	18.5
800ZR	150 GHz	0.6~1.2	Extended	18.5
DCI	75 GHz	6~6.9	Normal	8
mix DCI/DCI-1	75/150 GHz	5.3~6.9	Normal	8
DCI-1	150 GHz	9.8~10.4	Normal	8
DCI-2 (CIM8)	150 GHz	11.4~12.2	Normal	8

Procedure

Use the following commands to adjust BST1 amplifier gain and gain range:

```
configure
controller ots <Rack/Slot/Instance/Port>
ingress-ampli-gain-range <normal|extended>
ingress-ampli-gain <gain_value_in_tenths_of_dB>
commit
end
```

Example

This sample configuration sets BST1 gain range to extended and the gain to 19.5 dB:

```
configure
controller ots 0/0/0/1
ingress-ampli-gain-range extended
ingress-ampli-gain 195
commit
end
```

View channel APC information

Use this procedure to configure and use the show command to view channel Automatic Power Control (APC) status and parameters.

This task describes how to view channel APC information.

These tables describe the different parameters and status values in the output of the show command.

Table 91: Channel APC parameter definitions

Parameter	Description
Controller	Identifier of the optical controller managing the channel, formatted as Ots0/slot/interface/port.
Internal Status	Current state of the Channel APC control loop, e.g., IDLE means regulation is complete and stable.
Input Gain	Gain value (in dB) applied by the first stage amplifier (BST1) to the input signal.
Input Gain Range	Gain range mode of the BST1 amplifier, e.g., Normal or Extended, indicating the amplifier's operating range.
Input Gain Range Min - Max	Minimum and maximum gain values (in dB) for the BST1 amplifier in the current gain range.
Last Correction	Timestamp of the last adjustment made by the Channel APC control loop to equalize channel power.
Output PSD Target	Target Power Spectral Density (PSD) value (in dBm/12.5 GHz) that the Channel APC aims to maintain for all channels.
PSD Correction Tolerance	Allowed deviation margin (in dB) from the target PSD before the Channel APC initiates a correction.

Table 92: Channel APC status definitions

Status	Description
BLOCKED	Triggered by amplifier safety events (APR, OSRI), RX-LOS alarms, or OTS controller shutdown. The following reasons can cause this status: • INPUT-EDFA-OSRI-ENABLED • OUTPUT-EDFA-OSRI-ENABLED • INPUT-EDFA-RX-LOS • OUTPUT-OTS-SHUTDOWN • INPUT-OTS-SHUTDOWN
PAUSED	Regulation paused via channel-apc-pause command; no adjustments occur.
IDLE	Regulation complete; all channels meet target PSD within tolerance.
REGULATING	Active regulation in progress to correct PSD discrepancies.

Table 93: Channel APC table parameters

Parameter	Description
Controller	Ots-Och r/s/i/p/<channel-id> Channel in input to the COM-RX
Center Frequency	Central frequency of the channel
Width	Width of the channel
Status	Status of the Channel, see the *Channel APC per-channel status definitions* table.
Spectrum	Set of spectrum slices belonging to the channel
Input PSD	Channel Input power in term of PSD at COM-RX input port
Input Power	Channel Input power at COM-RX input port
Channel PSD	Channel power in term of PSD after the WB block. It should be next to the PSD target less than the *PSD Correction Tolerance* parameter shown by the command
Channel Power	Channel power after the WB block
PSD Discrepancy	Current error margin between the *Channel PSD* and the *Configured Target PSD*. It the value increases above the *PSD Correction Tolerance*, a new regulation sequence starts.
Attenuation	The attenuation value configured on the WB to reach the target.

Table 94: Channel APC per-channel status definitions

Channel Status	Description
Active	Channel is managed and matches target PSD at WB output.
Not Active	Channel power insufficient to reach target PSD; channel is blocked or inactive.
Regulating	Channel is currently undergoing PSD adjustment.
Out Of Range	Channel PSD too high or too low to be active even with max or zero attenuation.

Procedure

To view channel APC information, use the **show olc channel-apc regulation-info** command.

Example

```
RP/0/RP0/CPU0:IOS#show olc channel-apc regulation-info

Thu Jul 17 16:06:13.213 CEST


Controller                                : Ots0/0/0/0

Internal Status                           : IDLE

Input Gain                                : 8.0 dB

Input Gain Range                          : Normal

Input Gain Range Min - Max                : 5.0 - 11.0 dB

Last Correction                           : 2025-07-17 14:23:18

Output PSD Target                         : -20.0 dBm/12.5GHz

PSD Correction Tolerance                  : 0.3 dB




Controller          Center       Width      Status          Spectrum
Input          Input       Channel        Channel     PSD          Attenuation


                     Frequency    (GHz)                       6.25 GHz
PSD            Power       PSD            Power       Discrepancy   (dB)

                     (THz)                                    Slices Range
(dBm/12.5GHz)  (dBm)       (dBm/12.5GHz)  (dBm)       (dBm)

==================================================================================================

Ots-Och0/0/0/0/1    196.100000   75.000     Not Active      779 - 790
-50.00         -50.00      -50.00         -50.00      -             25.00

Ots-Och0/0/0/0/2    196.025000   75.000     Active          767 - 778
-24.22         -18.10      -19.97         -14.00      0.03          0.10

Ots-Och0/0/0/0/3    195.950000   75.000     Not Active      755 - 766
-50.00         -50.00      -50.00         -50.00      -             25.00
```

Note

APC periodically monitors the per channel Power Spectral Density (PSD) discrepancy. If the measured discrepancy exceeds the **PSD Correction Tolerance**, the APC initiates regulation on the Line Controller to reduce each channel's discrepancy below the defined tolerance. This regulation ensures a flat spectrum before the EDFA facing the LINE port.

- The regulation process may take a few seconds to complete.
- During this time, the APC status transitions and eventually reaches the final state **IDLE**.
- The values displayed by the command `show olc channel-apc controller Ots0/0/0/0 regulation-info` reflect the state of the LC at the moment the command is executed.
- Because the regulation is ongoing during this period, some values shown may already reflect the final regulated state, while others may not yet have updated to the final values.

This behavior is important to understand when interpreting the output of the channel APC regulation status, as transient discrepancies in the displayed data can occur during the regulation process.

Channel input power management parameters

This section explains how channel input power management parameters define and monitor channel input power levels.

A channel input power management parameter is a configuration setting that

- defines and monitors channel input power levels,
- enables logic for blocking or accepting channels based on minimum input power, and
- facilitates automatic BST1 gain configuration and channel input power monitoring through alarms.

Table 95: Feature History

Feature Name	Release Information	Feature Description
Enhanced Channel Automatic Power Control (APC) support on EDFA2 Card	Cisco IOS XR Release 25.4.1	This feature introduces enhanced channel control and management on the EDFA2 card, enhancing configuration and management capabilities. It allows users to configure the expected input power at full channel load as a single, unified parameter, streamlining previous legacy BST1 configurations with new CLI commands. These commands automatically configure BST1 gain and facilitate the raising or clearing of two new alarms per channel for improved monitoring. Additionally, this feature enables users to control the initial setup of channels, amplifiers, and thresholds required for Metro Open Line System (MOLS) deployment. New Alarms introduced: • OLC_APC_FM_CHANNEL_LOW_INPUT_POWER • OLC_APC_FM_CHANNEL_HIGH_INPUT_POWER New CLI commands introduced: • `channel-minimum-input-psd` • `expected-total-input-power` • `channel-rx-power-low-rel-thr` • `channel-rx-power-high-rel-thr` You can configure these commands using the OpenConfig model. The transport line common model is augmented to support channel configuration on the EDFA2 card.

These sections provide detailed information on specific channel input power management parameters and their functionalities:

Channel Minimum Input PSD: This parameter determines if a channel is blocked at the Wavelength Blocker or accepted and controlled to a configured PSD target. A channel is blocked if its input power is lower than the calculated `channel_minimum_input_power`. This configuration overrides legacy channel acceptance or blocking criteria. A hysteresis of 0.5 dBm is implemented to prevent continuous blocking or activation.

```
channel_minimum_input_power = channel-minimum-input-psd +
10*log10(channel_width/12.5)
```

> **Note**
>
> `channel-minimum-input-psd` misconfiguration may cause traffic to drop.

Channels Expected Total Input Power: This parameter allows for automatic BST1 configuration by the Channel APC application and enables monitoring of each channel's input power through low and high alarms. BST1 auto-configuration is active only when Channel APC is configured in `flat-psd-eq-mode`.

```
expected_channel_input_power = expected-total-input-power -
10*log10(full_spectrum_in_ghz / 12.5) + 10*log10(channel_width / 12.5)
```

These conditions trigger alarms:

- Channel low input power alarm: `channel_input_power < expected_channel_input_power + channel-rx-power-low-rel-thr`

  Example:`0/S/NXR0 Minor Software 01/08/2025 19:22:11 UTC Ots0/S/0/1/C_ID - Input channel power below the minimum expected`

- Channel high input power alarm: `channel_input_power > expected_channel_input_power + channel-rx-power-high-rel-thr`

  Example:`0/0/NXR0 Minor Software 01/08/2025 19:22:11 UTC Ots-Och0/0/0/1/1 - Input channel power above the maximum expected`

Adding a hysteresis of 0.5 dB to the clear threshold prevents alarm flickering. Channel high/low input power alarms function independently and do not require Channel APC to be enabled.

> **Note**
>
> `expected-total-input-power` misconfiguration may cause traffic to drop.

This table illustrates how different configuration parameters enable specific functionalities.

Table 96: Configuration and features matrix

Configuration parameters	Default value	New channel blocking or activation policy	BST1 auto-config	Channel low/high input power alarms
channel-apc	NA	Must be set to flat-psd-eq-mode	Must be set to flat-psd-eq-mode	No impact
channel-minimum-input-psd	NA	Must be set to any valid value	No impact	No impact
expected-total-input-power	NA	No impact	Must be set to any valid value	Must be set to any valid value
channel-rx-power-low-rel-thr	-3 dB	No impact	No impact	Default or set to any valid value

Configuration parameters	Default value	New channel blocking or activation policy	BST1 auto-config	Channel low/high input power alarms
channel-rx-power-high-rel-thr	+3 dB	No impact	No impact	Default or set to any valid value

BST1 gain settings

The BST1 gain is set by the Channel APC application based on the `expected-total-input-power` configured using this simple Look-Up Table (LUT):

Table 97: BST1 gain mode and setpoint

expected-total-input-power	BST1 gain mode	BST1 gain setpoint
> 3.5dBm	Normal	8 dB
<= 3.5dBm	Extended	18.5 dB

Configure channel input power management parameters

Use this procedure to configure channel input power management parameters for optical line control to enable advanced blocking/activation policies, automatic BST1 gain configuration, and channel input power monitoring.

Use this task to configure the channel minimum input PSD, expected total input power, and channel RX power thresholds for optical line control.

These configurations enable new channel blocking and activation policies, automatic BST1 gain configuration, and channel input power monitoring.

Note

`channel-minimum-input-psd` or `expected-total-input-power` misconfiguration may cause traffic to drop.

Procedure

1. Enter global configuration mode.

   Example

   ```
   RP/0/RP0/CPU0:ios#conf
   ```

2. Access optical line control configuration.

   Example

   ```
   RP/0/RP0/CPU0:ios#(config)#optical-line-control
   ```

3. Specify the controller for which you want to configure the parameters.

   Example

```
RP/0/RP0/CPU0:ios#(config-olc)#controller ots
0/0/0/1
```

4. Configure `channel-minimum-input-psd`. If not configured, the legacy channel policy is applied.

   Example

```
RP/0/RP0/CPU0:ios#(config-olc-ots)#channel-minimum-input-psd
<value>
```

   Enter the `channel-minimum-input-psd` in the range -40.0 dBm per 12.5 GHz to 23.0 dBm per 12.5 GHz in increments of 0.1 dBm per 12.5 GHz.

5. Configure `expected-total-input-power`. If not configured, automatic BST1 configuration and input channel alarms are disabled.

   Example

```
RP/0/RP0/CPU0:ios#(config-olc-ots)#expected-total-input-power
<value>
```

   Enter the `expected-total-input-power` in the range -40.0 dBm to 23.0 dBm in increments of 0.1 dBm.

6. Configure `channel-rx-power-low-rel-thr`.The default value is -3dB.

   Example

```
RP/0/RP0/CPU0:ios#(config-olc-ots)#channel-rx-power-low-rel-thr
<value>
```

   Enter the threshold in the range -20.0 dB to -1.0 dB in increments of 0.1 dB.

7. Configure `channel-rx-power-high-rel-thr`. The default value is +3dB.

   Example

```
RP/0/RP0/CPU0:ios#(config-olc-ots)#channel-rx-power-high-rel-thr
<value>
```

   Enter the threshold in the range 1.0 dB to 20.0 dB in increments of 0.1 dB.

8. Commit the changes and exit configuration mode.

   Example

```
RP/0/RP0/CPU0:ios#(config-olc-ots)#commit
RP/0/RP0/CPU0:ios#(config-olc-ots)#root
RP/0/RP0/CPU0:ios#(config)#exit
```

The channel input power management parameters are configured, enabling new blocking/activation policies, BST1 auto-configuration, and channel RX power alarms based on your settings.

What to do next

Verify the configuration using the operational CLI `show olc channel-apc controller`.

Verify channel APC regulation information

Use this procedure to verify and monitor the current Channel APC regulation status and channel-specific power information to ensure optimal optical line controller performance.

Use this task to display the current Channel APC regulation status and channel-specific power information.

This command helps you monitor the effects of your channel input power management configurations. The output varies based on whether expected-total-input-power or channel-minimum-input-psd are configured.

- If `expected-total-input-power` is not configured, the Expected Input Pwr column is not shown.
- If `expected-total-input-power` is configured, the Input PSD column is not shown.
- If `channel-minimum-input-psd` is not configured, the Minimum Input Pwr column is not shown.

Note

This command is valid only for NCS 1014 platforms; on other platforms, it produces an empty output.

The optical line controller must be active and configured.

Procedure

Execute the `show olc channel-apc controller` command to view regulation details.

Example

```
RP/0/RP0/CPU0:kepler-4-1#show olc channel-apc controller Ots0/0/0/0
regulation-info
Thu Jun 12 15:30:52.855 CEST

Controller                              : Ots0/0/0/0
Internal Status                         : IDLE
Input Gain                              : 18.5 dB
Input Gain Range                        : Extended
Input Gain Range Min - Max              : 17.0 - 23.0 dB
Last Correction                         : 2025-06-12 15:29:51
Output PSD Target                       : -20.0 dBm/12.5Ghz
PSD Correction Tolerance                : 0.3 dB

 Controller          Center       Width      Status          Spectrum
Input          Input       Expected    Minimum     Channel        Channel
 PSD           Attenuation
                    Frequency    (GHz)                       6.25 GHz
PSD            Power       Input Pwr   Input Pwr   PSD            Power
 Discrepancy   (dB)
                    (THz)                                   Slices Range
```

```
(dBm/12.5GHz)  (dBm)       (dBm)       (dBm)       (dBm/12.5GHz)  (dBm)
 (dB)
=================================================================================

 Ots-Och0/0/0/0/1    194.000000   100.000    Active          441 - 456
-23.27         -17.30      -14.81      -25.97      -20.27         -14.30
 -0.27         12.60
 Ots-Och0/0/0/0/2    196.025000   100.000    Active          765 - 780
-24.15         -18.00      -14.81      -25.97      -20.17         -14.00
 -0.17         10.30
 Ots-Och0/0/0/0/10   195.000000   150.000    Not Active      597 - 620
-90.00         -90.00      -13.05      -24.21      -90.00         -90.00
 -             25.00
 Ots-Och0/0/0/0/50   191.375000   100.000    Not Active      21 - 36
-90.00         -90.00      -14.81      -25.97      -90.00         -90.00
 -             25.00
```

The system displays detailed regulation information, including input gain, output PSD target, and per-channel power status, reflecting the configured channel input power management parameters.

15 Amplifier APC

Topics:

- Amplifier APC
- Configure fiber type

This section provides details about amplifier automatic power control (APC) features, their functions, and operational benefits in optical networks.

This chapter describes amplifier APC.

Amplifier APC

This section explains how Amplifier Automatic Power Control (APC) stabilizes optical power in optical fiber links by compensating for span loss variations.

From Release 25.2.1, Amplifier Automatic Power Control (APC) is supported on the EDFA2 card. APC is an optical; application that compensates for span loss variations over time in optical fiber links. This compensation ensures stable optical power levels despite changes in span loss.

Amplifier APC is implemented by two independent control loops:

- Line TX direction: Managed by controller Ots0/<slot>/0/0, which acts on VOA1 attenuation.
- Line RX direction: Managed by controller Ots0/<slot>/0/1, which acts on PRE-Amplifier Gain.

This diagram shows the NCS1K14-EDFA2 line card optical layout. Optical components controlled by amplifier APC are highlighted in green.

Figure 23: NCS1K14-EDFA2 line card optical layout

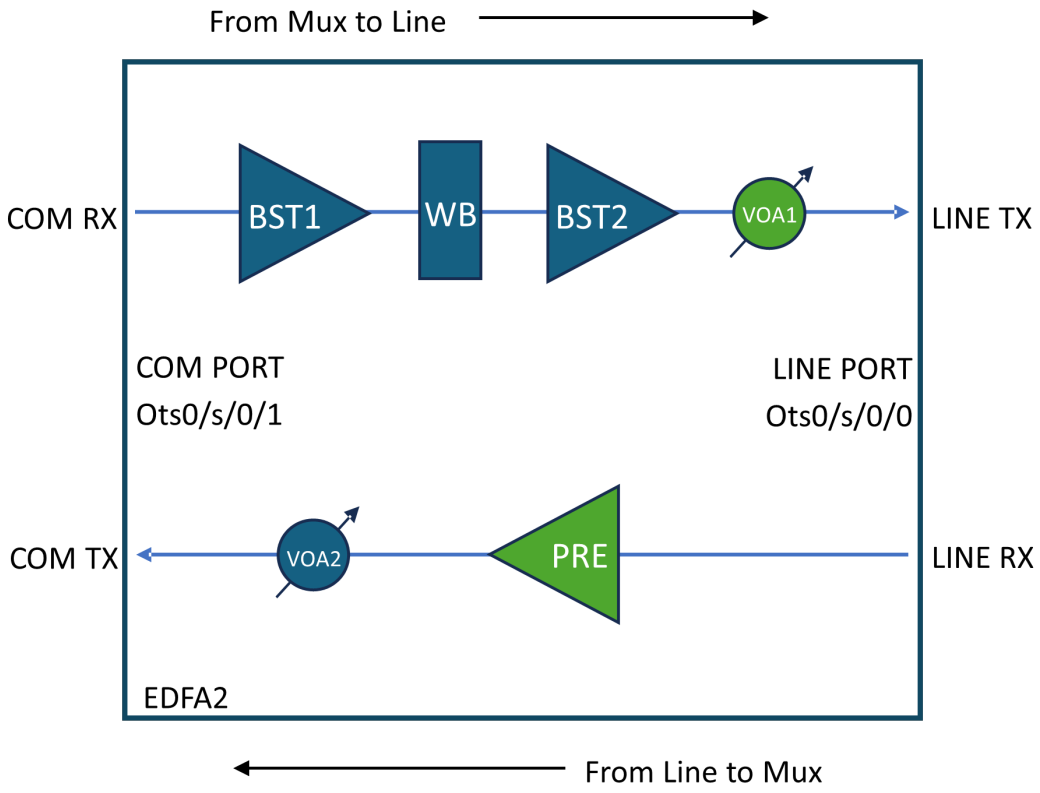

How amplifier APC works

This section describes how amplifier automatic power control (APC) compensates for span loss variations, including key actors, control loops, and process stages.

Summary

Amplifiers APC control loop compensates the span loss variation over time.

Workflow

These are the stages of amplifier apc process.

1. A span loss variation greater than 0.5 dB triggers the control loops to perform correction.
2. For a given direction (e.g., from near-end towards far-end), a span loss change is compensated by adjusting:
   - Near-end TX **VOA1 attenuation** or
   - Far-end RX **PRE gain**.
3. Span loss changes are detected by the OLC Span Loss application, which notifies the APC application to trigger a correction. For a given direction, a span loss change is compensated by adjusting the near-end transmit VOA1 attenuation and/or the far-end receive PRE gain.
   - **Lookup Table:**

     The VOA attenuation and PRE gain adjustments are derived using an internal lookup table. This table is indexed by Fiber Type and the current Span Loss value, returning the appropriate VOA1 attenuation and PRE gain values. The lookup table defines how much of the span loss variation is compensated by the TX VOA attenuation and how much by the RX PRE gain.
   - **PRE Amplifier Saturation Control:**

     An additional control loop is implemented to limit the PRE gain configuration to avoid amplifier saturation, ensuring that the output power does not exceed the maximum allowed value based on the input power and the calculated gain from the lookup table.

Enable Amplifier APC

Use this procedure to configure amplifier APC to ensure optimal automatic power control on COM and line ports.

This topic describes how to enable amplifier APC.

This task describes how to configure amplifier APC. These configurations are in this topic:

- Enable amplifier APC on COM port
- Enable amplifier APC on line port

Procedure

1. Use these commands to enable amplifier APC on COM port

```
configure
optical-line-control
controller ots 0/<slot>/0/1
ampli-apc span-mode
commit
end
```

2. Use these commands to enable amplifier APC on line port

```
configure
optical-line-control
controller ots 0/<slot>/0/0
ampli-apc span-mode
commit
end
```

Disable Amplifier APC

Use this procedure to configure commands to disable the amplifier automatic power control (APC) on COM and line ports.

This topic describes how to disable amplifier APC.

This task describes how to configure amplifier APC. These configurations are in this topic:

- Disable amplifier APC on COM port
- Disable amplifier APC on line port

Procedure

1. Use these commands to disable amplifier APC on COM port

```
configure
optical-line-control
controller ots 0/<slot>/0/1
no ampli-apc span-mode
commit
end
```

2. Use these commands to disable amplifier APC on line port

```
configure
optical-line-control
controller ots 0/<slot>/0/0
no ampli-apc span-mode
commit
end
```

Pause Amplifier APC

Use this procedure to configure the amplifier APC to pause its current operation using the CLI commands.

This topic describes how to pause amplifier APC.

This task describes how to configure amplifier APC. This configuration is in this topic:

- Pause amplifier APC

Procedure

Use these commands to pause amplifier APC

```
configure
optical-line-control
controller ots 0/<slot>/0/<port>
ampli-apc-pause
commit
end
```

Resume Amplifier APC

Use this procedure to resume the amplifier automatic power control (APC) function using CLI commands.

This topic describes how to configure amplifier APC.

This task describes how to configure amplifier APC. This configuration is in this topic:

- Resume amplifier APC

Procedure

Use these commands to resume amplifier APC

```
configure
optical-line-control
controller ots 0/<slot>/0/<port>
no ampli-apc-pause
commit
end
```

View amplifier APC information

Use this procedure to configure and run show commands to display APC information for optical amplifiers, including field values and status states, in the line TX and RX directions.

This task describes how to view amplifier APC information.

The Line TX direction control loop acts on VOA1 attenuation and is managed by controller `Ots0/<slot>/0/0`.

Table 98: Field Descriptions for Line TX:

Field	Description
Gain Range	BST2 gain range
Last Correction	Last VOA1 attenuation correction time stamp
Last Span-Loss Input	Last Line TX span loss value measured
Last Span-Loss Input Timestamp	Last Line TX span loss measure time stamp
Span-Loss Correction Threshold	Threshold below which no correction is triggered
Egress Ampli Input Power (dBm)	BST2 input power
Egress Ampli Gain (dB)	BST2 gain
Egress Ampli Output Power (dBm)	BST2 output power
TX VOA Attenuation (dB)	VOA1 attenuation
TX Signal Power (dBm)	Signal power on Line TX

The Line RX direction control loop acts on PRE amplifier gain and is managed by controller `Ots0/<slot>/0/1`.

Table 99: Field Descriptions for Line RX:

Field	Description
Gain Range	PRE gain range
Last Correction	Last PRE gain correction time stamp
Last Span-Loss Input	Last Line RX span loss value measured
Last Span-Loss Input Timestamp	Last Line RX span loss measure time stamp
Span-Loss Correction Threshold	Threshold below which no correction is triggered
Egress Ampli Input Power (dBm)	PRE input power
Egress Ampli Gain (dB)	PRE gain
Egress Ampli Output Power (dBm)	PRE output power
TX VOA Attenuation (dB)	VOA2 attenuation
TX Signal Power (dBm)	Signal power on Com TX

Table 100: Amplifier APC status definitions

Amplifier APC Status	Description
BLOCKED	The APC moves to BLOCKED state if: • An amplifier safety event like APR or OSRI has been triggered • RX-LOS alarm on Ots controllers • OTS controller(s) shutdown
PAUSED	APC is paused using the ampli-apc-pause command. No regulation is executed on VOA2 or PRE amplifier when in this status.
IDLE	APC regulation has been completed successfully; no current adjustments are being made.
REGULATING	APC detected a span loss variation and is actively adjusting VOA2 attenuation and/or PRE gain.

Table 101: Reasons for line TX direction APC blocking

Blocking Reason	Description
OUTPUT-EDFA-OSRI-ENABLED	OSRI triggered on the BST2 amplifier
OUTPUT-EDFA-ALS	BST2 amplifier in Auto Laser Shutdown
OUTPUT-OTS-SHUTDOWN	Ots controller shutdown (output side)
INPUT-OTS-SHUTDOWN	Ots controller shutdown (input side)

Table 102: Reasons for line RX direction APC blocking

Blocking Reason	Description
OUTPUT-EDFA-OSRI-ENABLED	OSRI triggered on the PRE amplifier
INPUT-EDFA-RX-LOS	RX-LOS alarm present on the Ots0/<slot>/0/0 controller
OUTPUT-OTS-SHUTDOWN	Ots controller shutdown (output side)
INPUT-OTS-SHUTDOWN	Ots controller shutdown (input side)

Procedure

1. To view channel APC information for Line TX direction, use the **show olc ampli-apc controller Ots R/S/0/0 regulation-info** command.

   Example

   Typical output when the Line TX direction control loop is the IDLE state.

```
RP/0/RP0/CPU0:ios#show olc ampli-apc controller Ots 0/0/0/0 regulation-info
Mon Jul  7 17:01:56.549 CEST

Controller                                : Ots0/0/0/0
Internal Status                           : IDLE
Gain Range                                : Normal
Last Correction                           : 2025-07-07 15:43:40
Last Span-Loss Input                      : 28.30 dB
Last Span-Loss Input Timestamp            : 2025-07-07 16:49:20
Span-Loss Correction Threshold            : 0.5 dB


  Device Parameters                        Min           Max
Configuration           Operational
================================================================================

  Egress Ampli Input Power (dBm)   :      -             -             -
                  -33.95
  Egress Ampli Gain (dB)           :      -             -             -
                  35.00
  Egress Ampli Output Power (dBm)  :      -             22.5          -
                  7.99
  TX VOA Attenuation (dB)          :      0.0           20.0          0.0
                  0.20
  TX Signal Power (dBm)            :      -             -             -
                  7.84
```

   Typical output when the Line TX direction control loop is the BLOCKED state.

```
RP/0/RP0/CPU0:ios#show olc ampli-apc controller Ots 0/0/0/0 regulation-info
Mon Jul  7 17:07:39.033 CEST

Controller                                : Ots0/0/0/0
Internal Status                           : BLOCKED
Blocked Reason                            : [ OUTPUT-EDFA-ALS ]
Gain Range                                : Normal
Last Correction                           : 2025-07-07 15:43:40
Last Span-Loss Input                      : 28.30 dB
```

```
Last Span-Loss Input Timestamp           : 2025-07-07 16:49:20
Span-Loss Correction Threshold           : 0.5 dB


  Device Parameters                       Min           Max
Configuration           Operational
=================================================================================

  Egress Ampli Input Power (dBm)   :      -             -             -
                  -34.03
  Egress Ampli Gain (dB)           :      -             -             -
                  0.00
  Egress Ampli Output Power (dBm)  :      -             22.5          -
                  -50.00
  TX VOA Attenuation (dB)          :      0.0           20.0          0.0
                  0.00
  TX Signal Power (dBm)            :      -             -             -
                  -50.00
```

2. To view channel APC information for Line RX direction, use the **show olc ampli-apc controller Ots R/S/0/1 regulation-info** command.

Example

Typical output when the Line RX direction control loop is the IDLE state.

```
RP/0/RP0/CPU0:ios#show olc ampli-apc controller Ots 0/0/0/1 regulation-info
Mon Jul  7 17:36:51.991 CEST

Controller                               : Ots0/0/0/1
Internal Status                          : IDLE
Gain Range                               : Extended
Last Correction                          : 2025-07-07 12:59:08
Last Span-Loss Input                     : 5.93 dB
Last Span-Loss Input Timestamp           : 2025-07-07 17:22:28
Span-Loss Correction Threshold           : 0.5 dB


  Device Parameters                       Min           Max
Configuration           Operational
=================================================================================

  Egress Ampli Input Power (dBm)   :      -             -             -
                  -18.40
  Egress Ampli Gain (dB)           :      20.0          39.0          20.0
                  20.00
  Egress Ampli Output Power (dBm)  :      -             22.0          -
                  1.85
  TX VOA Attenuation (dB)          :      -             -             -
                  15.00
  TX Signal Power (dBm)            :      -             -             -
                  -12.89
```

Typical output when the Line RX direction control loop is the BLOCKED state.

```
RP/0/RP0/CPU0:ios#show olc ampli-apc controller Ots 0/0/0/1 regulation-info
Mon Jul  7 17:38:23.759 CEST

Controller                               : Ots0/0/0/1
Internal Status                          : BLOCKED
```

```
Blocked Reason                            : [ OUTPUT-EDFA-OSRI-ENABLED ]
Gain Range                                : Extended
Last Correction                           : 2025-07-07 12:59:08
Last Span-Loss Input                      : 5.93 dB
Last Span-Loss Input Timestamp            : 2025-07-07 17:22:28
Span-Loss Correction Threshold            : 0.5 dB


  Device Parameters                        Min           Max
Configuration           Operational
==========================================================================================

  Egress Ampli Input Power (dBm)    :      -             -              -
                  -18.39
  Egress Ampli Gain (dB)            :      20.0          39.0          20.0
                  0.00
  Egress Ampli Output Power (dBm)   :      -             22.0           -
                  -50.00
  TX VOA Attenuation (dB)           :      -             -              -
                  15.00
  TX Signal Power (dBm)             :      -             -              -
                  -50.00
```

Note

To clear the previously evaluated RX signal span loss checkpoints, remove the APC configuration from IOS XR, specifically from the AMPLIAPC on the line and the COM port.

Configure fiber type

Use this procedure to configure the fiber type for an optical line controller using CLI commands.

This topic describes how to configure fiber type.

This task describes how to configure amplifier APC. This configuration is in this topic:

- Configure fiber type

Procedure

Use these commands to configure fiber type

```
configure
optical-line-control
controller ots 0/<slot>/0/1
fiber-type <fiber_type>
commit
```

Note

Only **SMF** and **E-LEAF** fiber types are currently supported by Amplifier APC. If not explicitly configured, SMF fiber type is used by default.

16 Internode Topology Discovery and Communication

Topics:

- NCS 1014 link topology discovery
- Configure OSPF on the nodes for automatic topology discovery

This section lists the capabilities and requirements for automatic topology discovery and communication between NCS 1014 nodes using OSC links.

Table 103: Feature History

Feature Name	Release Information	Feature Description
Automatic topology discovery	Cisco IOS XR Release 25.1.1	NCS 1014 now supports topology discovery using the OSC links created through the EDFA2 card. To establish the OSC link between two nodes, you need to configure the OSC pluggable to be operational and the OSPFv2 protocol on both the near-end and far-end nodes. By connecting the NCS 1014 to OSPF networks, the NCS 1014 network information is automatically communicated across multiple nodes.

NCS 1014 link topology discovery

This section explains how NCS 1014 devices use OSPF and OSC channels to perform automatic network topology discovery and communicate network information across multiple networks.

Automatic network topology discovery

Network topology discovery is automatic when you use an OSC channel created through the EDFA2 card. By connecting the NCS 1014 to Open Shortest Path First (OSPF) networks, NCS 1014 network information is automatically communicated across multiple LANs and WANs. In a network utilizing an OSC channel, all nodes can communicate with each other through this channel.

Understanding OSPF

OSPF is a link-state Internet routing protocol. Link-state protocols monitor their links with adjacent routers and assess the status of their connections to neighbors. These protocols advertise their directly connected networks and active links. Each link-state router compiles these link-state advertisements to form a topology of the entire network or area. From this database, the router calculates a routing table by constructing a shortest path tree. Routes are recalculated when topology changes occur. NCS 1014 supports only OSPFv2.

OSPF protocol in NCS networks

NCS 1014 uses the OSPFv2 protocol within internal NCS networks for node discovery, circuit routing, and node management. Enabling OSPFv2 on the NCS allows the NCS topology to be communicated to OSPF routers on a LAN. This eliminates the need to manually input static routes for NCS subnetworks. OSPF divides networks into smaller regions, called areas, each with a unique ID number, known as the area ID. Every OSPF network includes one backbone area called "area 0," and all other OSPF areas must connect to area 0.

Configure OSPF on the nodes for automatic topology discovery

Use this procedure to configure OSPFv2 on the near end and far end nodes to enable automatic topology discovery.

Use this task to configure OSPFv2 on the near end and far end nodes of the topology shown in this image.

Figure 24: Sample two node topology

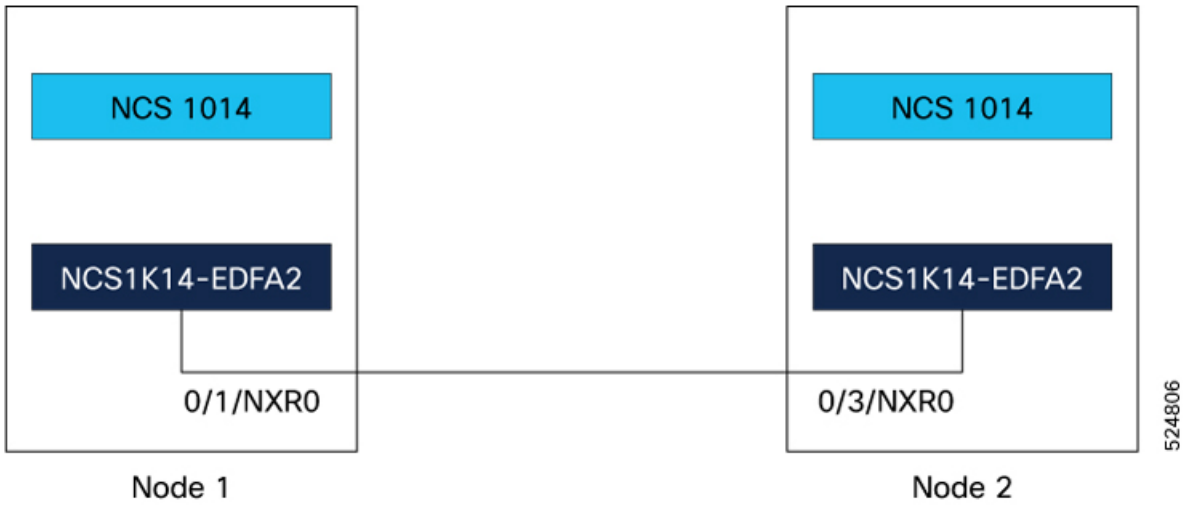

OSPFv2 supports only IPv4 addressing.

Procedure

1. Configure the interfaces.
   a) Use the **interface Loopback** command to configure the loopback interface IPv4 address, which is the primary loopback address that you want to reuse for all areas.

      Example:

      Node 1:

```
RP/0/CPU0:ios(config)# interface Loopback 0
RP/0/CPU0:ios(config-if)# ipv4 address 10.10.10.10 255.255.255.255
RP/0/CPU0:ios(config-if)# no shut
RP/0/CPU0:ios(config-if)# exit
```

      Node 2:

```
RP/0/CPU0:ios(config)# interface Loopback 0
RP/0/CPU0:ios(config-if)# ipv4 address 10.10.10.11 255.255.255.255
RP/0/CPU0:ios(config-if)# no shut
RP/0/CPU0:ios(config-if)# exit
```

   b) Use the interface GigabitEthernet command to configure the Gigabit Ethernet interface for the OSC link.

      Example:

      Node 1:

```
RP/0/CPU0:ios(config)# interface GigabitEthernet 0/1/0/5
RP/0/CPU0:ios(config-if)# ipv4 point-to-point
RP/0/CPU0:ios(config-if)# ipv4 unnumbered Loopback0
RP/0/CPU0:ios(config-if)# no shut
RP/0/CPU0:ios(config-if)# exit
```

      Node 2:

```
RP/0/CPU0:ios(config)# interface GigabitEthernet 0/3/0/5
RP/0/CPU0:ios(config-if)# ipv4 address 10.1.1.2 255.255.255.0
RP/0/CPU0:ios(config-if)# no shut
RP/0/CPU0:ios(config-if)# exit
```

2. Configure the OSPF process:
   a) Use the **router ospf** *process-name* to enable OSPF routing.
   b) Use the **distribute link-state** keyword to distribute OSPF link-state data.
   c) Use the **segment-routing mpls** keyword to enable MPLS-based segment routing for the OSPF process.

      This step is optional.

   d) Use the **network point-to-point** keyword to configure an interface OSPF network type to point-to-point.
   e) Use the **area** keyword to configure an OSPF area.

   Example:

Node 1 and 2:

```
RP/0/RP0/CPU0:ios(config)# router ospf 1
RP/0/RP0/CPU0:ios(config-ospf)#distribute link-state
RP/0/RP0/CPU0:ios(config-ospf)#segment-routing mpls
RP/0/RP0/CPU0:ios(config-ospf)#area 0
```

3. Add the configured interfaces to the OSPF area.

   Example:

   Node 1:

```
RP/0/RP0/CPU0:ios(config-ospf-ar)# interface Loopback 0
RP/0/RP0/CPU0:ios(config-ospf-ar-if)# exit
RP/0/RP0/CPU0:ios(config-ospf-ar)# interface GigabitEthernet 0/1/0/5
```

   Node 2:

```
RP/0/RP0/CPU0:ios(config-ospf-ar)# interface Loopback 0
RP/0/RP0/CPU0:ios(config-ospf-ar-if)# exit
RP/0/RP0/CPU0:ios(config-ospf-ar)# interface GigabitEthernet 0/3/0/5
```

4. Exit the OSPF area configuration mode and commit your configuration.

   Example:

   Node 1 and 2:

```
RP/0/RP0/CPU0:ios(config-ospf-ar-if)# exit
RP/0/RP0/CPU0:ios(config-ospf-ar)# exit
RP/0/(config-ospf)# exit
RP/0/RP0/CPU0:ios(config)# commit
RP/0/RP0/CPU0:ios(config)# exit
```

View the topology information

Use this procedure to view current topology information and status.

Use this task to view the topology information.

Procedure

1. Use the command **show olc internal** *slot id port id* **topo-link** to view the topology information.

   Example:

```
RP/0/RP0/CPU0:ios# show olc internal slot 0 port 0 topo-link
                        Thu Feb 20 19:53:52.277 IST
                        Self RID: 172.16.0.1
                        Node Type: OLT
                       <OLT><172.16.0.1><0x6a> --- <OLT><192.168.0.1><0x69>
```

   If no neighbors are discovered, an alarm will be triggered at the OSC port.

Example:

```
RP/0/RP0/CPU0:ios#show alarms brief system active
                        Thu Feb 20 19:54:31.266IST

-------------------------------------------------------------------------------

                        Active Alarms

-------------------------------------------------------------------------------

                        Location  Severity   Group       Set Time
       Description
                        0/1/NXR0  Minor      Software   02/20/2025 19:54:31
IST    Ots0/1/0/0 - Neighbour not found
```

```
RP/0/RP0/CPU0:ios#show alarms brief system
                        Thu Feb 20 19:44:35.212 UTC

-------------------------------------------------------------------------------

                        Active Alarms

-------------------------------------------------------------------------------

                        Location  Severity   Group       Set Time
       Description
                        0/3/NXR0  Minor      Software   02/20/2025 19:14:35
IST    Ots0/3/0/0 - Neighbour not found
```

2. Use the command ***show ip ospf neighbor*** to display OSPF neighbor information on a per-interface basis.

   Example:

```
                        RP/0/RP0/CPU0:ios#show ip ospf neighbor
                        Thu Feb 20 19:53:53.324 IST

                        * Indicates MADJ interface
                        # Indicates Neighbor awaiting BFD session up

                        Neighbors for OSPF 1

                        Neighbor ID     Pri   State           Dead Time
Address         Interface
                        192.168.0.1     1     FULL/  -        00:00:30
192.168.0.1     GigabitEthernet0/0/0/5
                        Neighbor is up for 00:00:56

                        Total neighbor count: 1
```

3. Use the **show ip interface brief** command to view a summary of the router interfaces.

   Example:

```
                        RP/0/RP0/CPU0:ios#show ip interface  brief
                        Thu Feb 20 19:53:54.653 IST
```

```
                         Interface                      IP-Address      Status
          Protocol   Vrf-Name
                         Loopback0                       10.10.10.10        Up
              Up       default
                         GigabitEthernet0/0/0/5          10.10.10.11        Up
              Up       default
                         GigabitEthernet0/0/0/5          172.16.0.1
Down            Down     default
                         MgmtEth0/RP0/CPU0/0             10.0.230.189       Up
              Up       default
                        MgmtEth0/RP0/CPU0/1            unassigned      Shutdown
          Down      default
                        PTP0/RP0/CPU0/1                unassigned      Shutdown
          Down      default
                         RP/0/RP0/CPU0:ios#
```