Installing the Air Flow Regulator

This chapter explains how to install the regulators to maintain the air flow for ANSI and ETSI configurations in NCS 2002 shelf.

The air flow within the equipment must be maintained at a nominal temperature. This task can be accomplished using one of these mechanisms:

- Air deflector
- Air plenum

The sections are:

- Air Deflector, on page 1
- Air Plenum, on page 1
- Air Plenum Rack and Cabinet Compatibility, on page 3
- NTP-L42 Install the Air Plenum in NCS 2002 Shelf, on page 4

Air Deflector

An air deflector is a sheet-metal part that is mounted on the NCS 2002 shelf to orient the air flow in a specific direction.

The air deflectors can be mounted in different positions to control the air flow:

- Front to Front— Only ETSI rack
- Front to Back— For ANSI and ETSI racks
- Front to Top— Only ETSI rack

In an ANSI rack, the air deflectors are mounted only on the 23-inch rack configuration.

Air Plenum

Air plenum orients the air flow in the front-to-back direction inside the equipment to be compliant with GR-63 issue 4 requirement.

NCS 2002 air plenum kit has one horizontal and two vertical air plenums. The air that flows from the front top inlet are channelized to the right vertical plenum, inside the equipment, and then to the exhaust air channel towards the left vertical air plenum. The air flow is deflected by 90 degrees and exited out in the rear end.

The following figure shows the air flow inside the air plenum.

Figure 1: Air flow within the air plenum

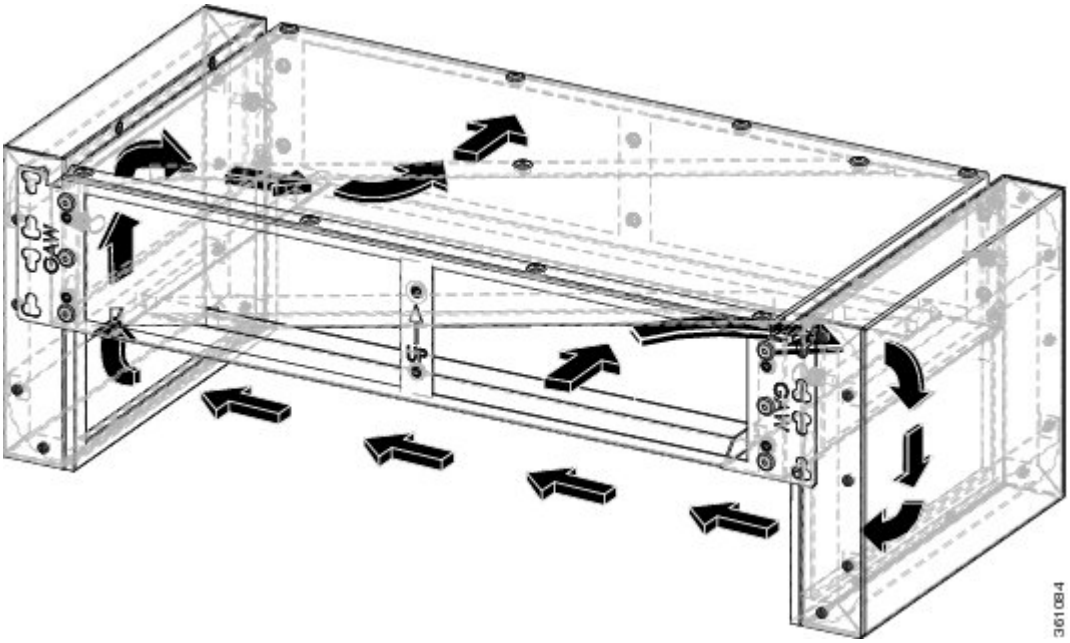

The following figures show the dimensions of the air plenum relative to the cabinet or rack.

Figure 2: Dimension of Cisco NCS 2002 chassis relative to the air plenum

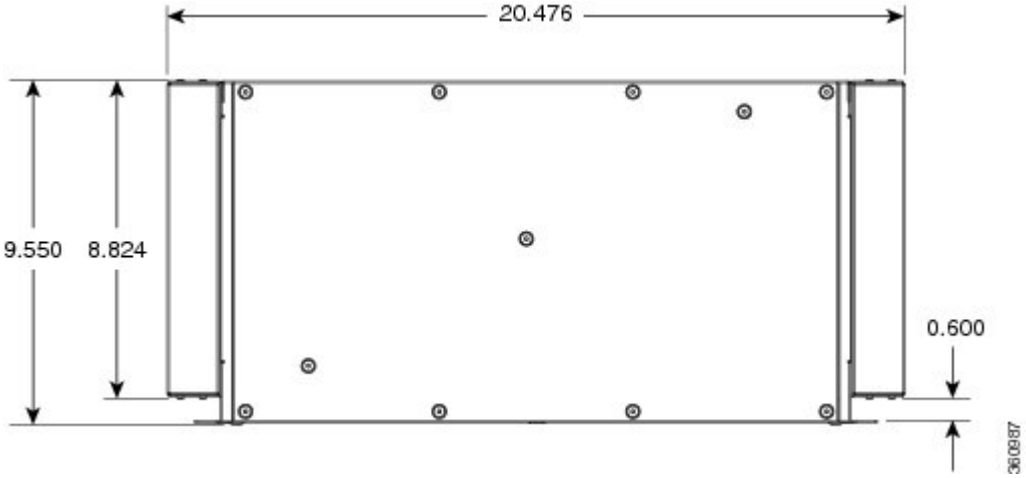

Figure 3: Dimension of Cisco NCS 2002 chassis relative to the air plenum

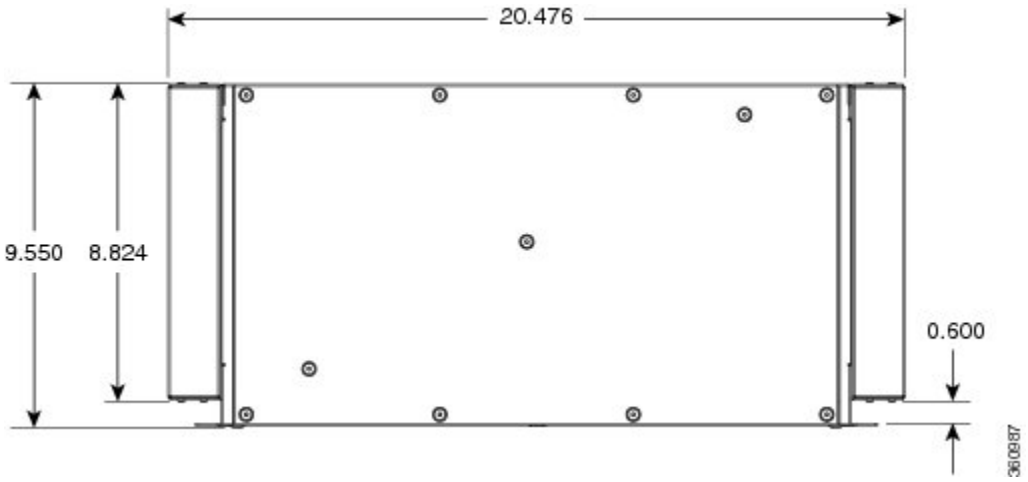

Air Plenum Rack and Cabinet Compatibility

The table shows the compatibility of air plenum with the ANSI and ETSI racks and cabinets. The chassis can be installed with brackets in front position only.

Table 1: Air plenum compatibility with racks and cabinets

Rack / Cabinet	Front-to-back air flow
ANSI 19-inch rack	Supported [1]
ANSI 19-inch cabinet	Supported [1]
ANSI 23-inch rack	Supported
ANSI 23-inch cabinet	Supported
ETSI cabinet	Supported [1]

[1] A minimum opening of 20.600 inches is required to install the vertical air plenum behind the front rails.

Note The ANSI 19-inch two post rack that is compatible with air plenum installation is available from Telect, with part number 12545-301.

Figure 4: Minimum rear opening for ANSI 19-inch and ETSI configuration

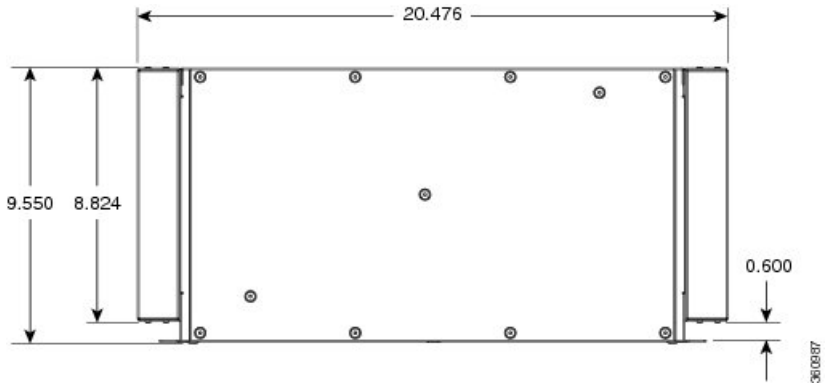

NTP-L42 Install the Air Plenum in NCS 2002 Shelf

Purpose	This procedure installs the air plenum to orient the air flow in front-to- back direction in the NCS 2002 shelf.

Tools/Equipment	• #2 Phillips Dynamometric screwdriver
	• Medium slot-head screwdriver
	• Small slot-head screwdriver
	• Screws
	  • ANSI: #12-24 x 0.50 pan-head Phillips screws
	  • ETSI: M6.0 x 20 pan-head Phillips screws
	• Wing head screws (4)
	• Adapter plates
	• One air plenum kit (horizontal and vertical air plenums)

Required/As Needed	As needed
Onsite/Remote	Onsite
Security Level	None

Warning **Before performing any of the following procedures, ensure that power is removed from the DC circuit.** Statement 1074

Warning **Before working on a chassis or working near power supplies, unplug the power cord on AC units.** Statement 246

Warning **This equipment is intended to be grounded. Ensure that the host is connected to earth ground during normal use.** Statement 39

Note For nominal voltage of -60 VDC, the input voltage range is from -40 to -72 VDC.

Note Use only the fastening hardware provided with the NCS 2002 to prevent loosening, deterioration, and electromechanical corrosion of the hardware and joined material.

Warning **When installing or replacing the unit, the ground connection must always be made first and disconnected last.** Statement 1046

Warning **The air plenum is installed on a rack or a cabinet using thread-forming screws that remove any paint or non-conductive coatings inside the hole threads, and establish a metal-to-metal contact. Also, clean both surfaces outside the screw points that come in contact, so that they are free of paint and other nonconductive coating. Apply an appropriate antioxidant compound to the surfaces.**

Procedure

Depending on the rack or cabinet, complete the necessary task:

- DLP-L65 Installing Air Plenum for NCS 2002 Shelf in ANSI 19-inch Configuration, on page 5
- DLP-L69 Installing Air Plenum in NCS 2002 Shelf for ANSI 23-inch Configuration, on page 8
- DLP-L70 Installing Air Plenum for NCS 2002 Shelf in ETSI Configuration, on page 13
- DLP-L71 Installing Pre-assembled Air Plenums in ANSI 23-inch Configuration, on page 12

Stop. You have completed this procedure.

DLP-L65 Installing Air Plenum for NCS 2002 Shelf in ANSI 19-inch Configuration

Purpose	This task installs the air plenum for the NCS 2002 shelf in ANSI 19-inch cabinet or rack configuration.

Tools/Equipment	• #2 Phillips Dynamometric screwdriver • Medium slot-head screwdriver • Small slot-head screwdriver • Screws: #12-24 x 0.50 pan-head Phillips screws (4) • Wing head screws (4) • One air plenum kit (horizontal and vertical air plenum)
Required/As Needed	As needed
Onsite/Remote	Onsite
Security Level	None

Note In the 19-inch rack and cabinet, the air plenum can be mounted only if the minimum opening is 20.600 inches to install the vertical air plenums behind the front rails.

Procedure

Step 1 Place the horizontal air plenum above the shelf slot in the ANSI 19-inch cabinet or rack.

Step 2 Insert the wing head screws provided with the kit, and tighten to a torque value of 11.5 in-lb (1.3 N-m).

Figure 5: Installing the horizontal air plenum in the ANSI 19-inch configuration

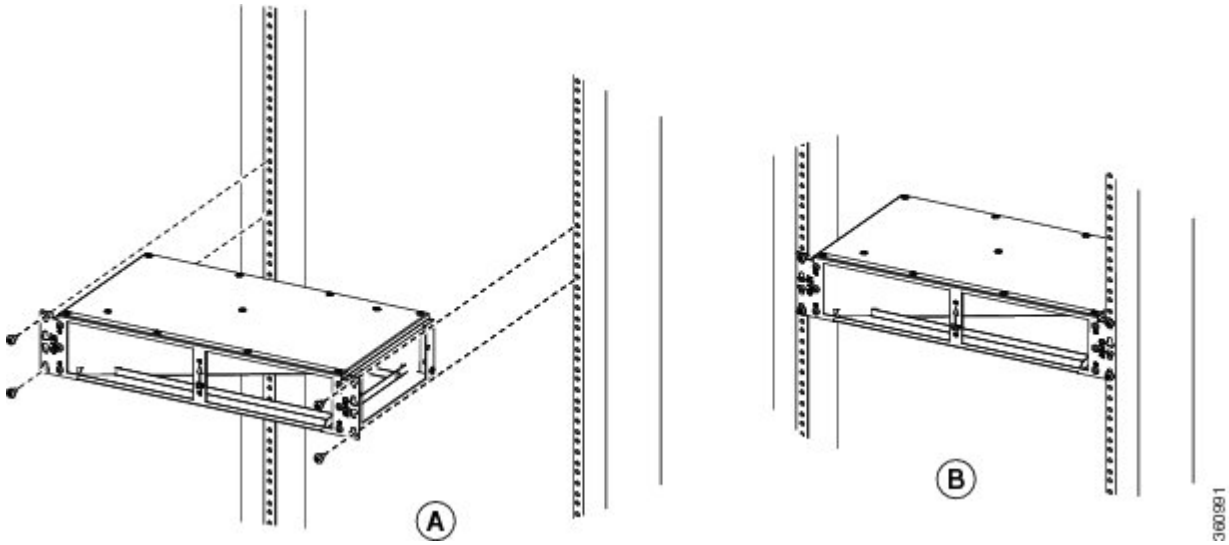

Step 3 Install the vertical air plenum to the left of the horizontal air plenum:

a) Insert the vertical plenum in the free space between the horizontal plenum and cabinet.

b) Install t he wing head screws fom the internal side of the horizontal plenum as shown in the following figure.

c) Tighten the screws to a torque value of 11.5 in-lb (1.3 N-m).

Figure 6: Installing the left vertical air plenum

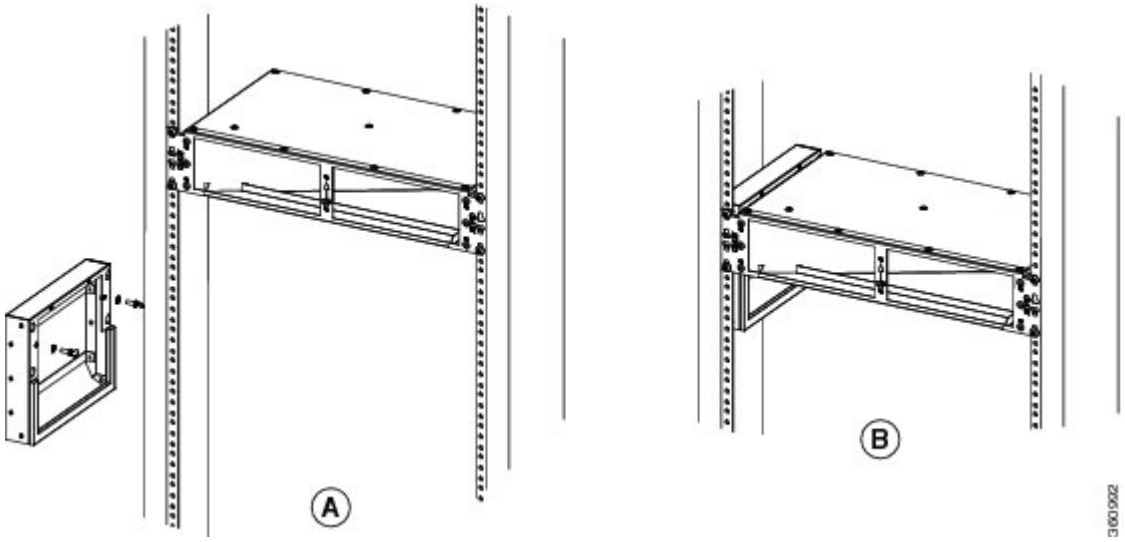

Step 4 Install the vertical air plenum to the right of the horizontal air plenum. Follow step 3a to 3c.

Figure 7: Installing the right vertical air plenum

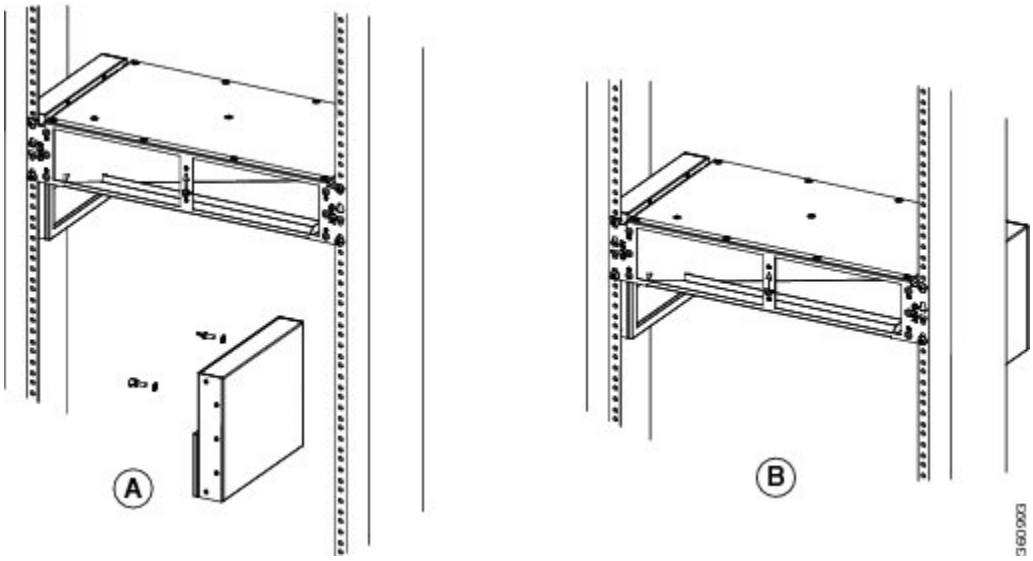

Step 5 Install the 19-inch standard brackets on both sides of the chassis in the front position. See DLP-L35 Mounting the 19-inch Brackets on the NCS 2002 Shelf for ANSI Rack Configuration.

Step 6 Install the NCS 2002 empty chassis below the horizontal plenum.

Figure 8: Installing the NCS 2002 chassis below the horizontal air plenum

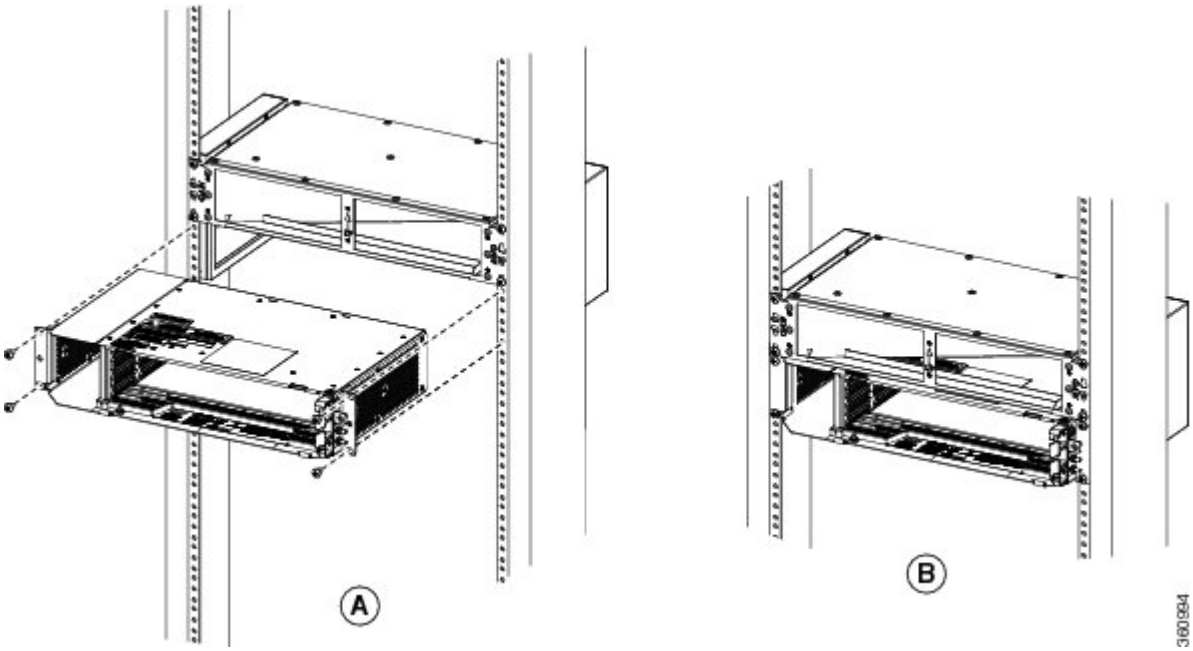

Step 7 Return to your originating procedure (NTP).

DLP-L69 Installing Air Plenum in NCS 2002 Shelf for ANSI 23-inch Configuration

Purpose	This task installs the air plenum for the NCS 2002 shelf in the ANSI 23-inch cabinet or rack configuration.
Tools/Equipment	• #2 Phillips Dynamometric screwdriver • Medium slot-head screwdriver • Small slot-head screwdriver • Screws: #12-24 x 3/4 pan-head Phillips mounting screws (4) • Wing head screws (4) • Adapter plates • One air plenum kit (horizontal and vertical air plenum)
Required/As Needed	As needed
Onsite/Remote	Onsite
Security Level	None

Note The air plenums for ANSI 23-inch configuration can also be pre-assembled outside the cabinet and then installed inside the cabinet. See DLP-L71 Installing Pre-assembled Air Plenums in ANSI 23-inch Configuration, on page 12

Procedure

Step 1 Install the ANSI 23-inch adapter plates on the horizontal air plenum.

Step 2 Align the screws to fix the adapter plates to the shelf. Insert the screws and tighten them to a torque value of 11.5 in-lb (1.3 N-m).

Figure 9: Installing the adapter plates on the horizontal air plenum

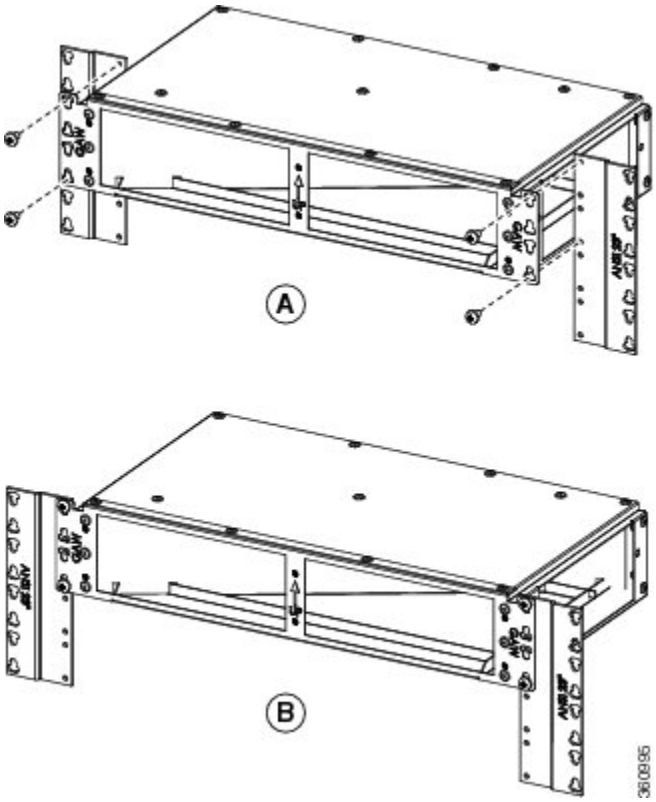

Step 3 Place the horizontal air plenum above the shelf slot in the ANSI 23-inch cabinet or rack.

Step 4 Insert the wing head screws provided with the kit, and tighten to a torque value of 11.5 in-lb (1.3 N-m).

Figure 10: Installing the horizontal air plenum in the ANSI 23-inch configuration

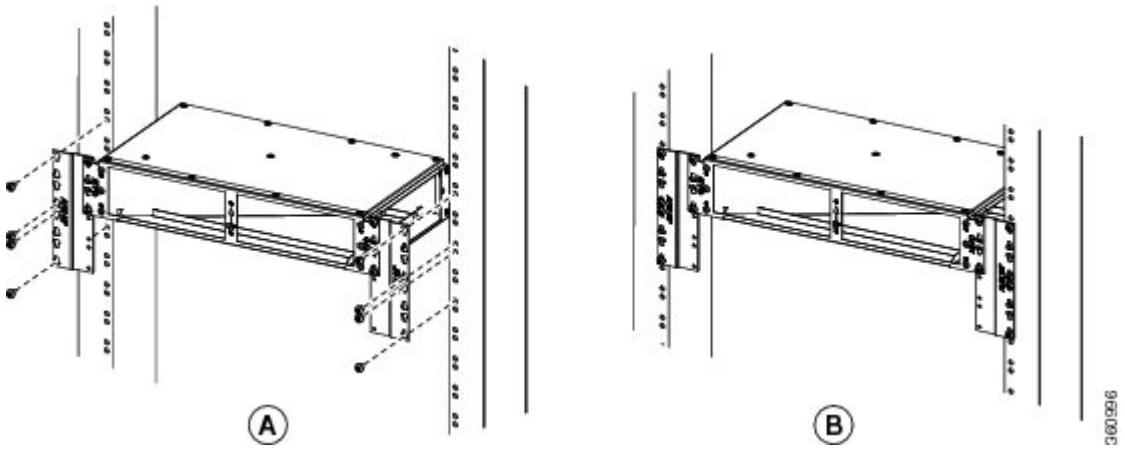

Step 5 Install the vertical air plenum to the left of the horizontal air plenum:

a) Insert the vertical air plenum in the free space between the horizontal air plenum and cabinet.

b) Install the wing head screws from the internal side of the horizontal plenum as shown in the following figure.

c) Tighten the screws to a torque value of 11.5 in-lb (1.3 N-m).

Figure 11: Installing the left vertical air plenum

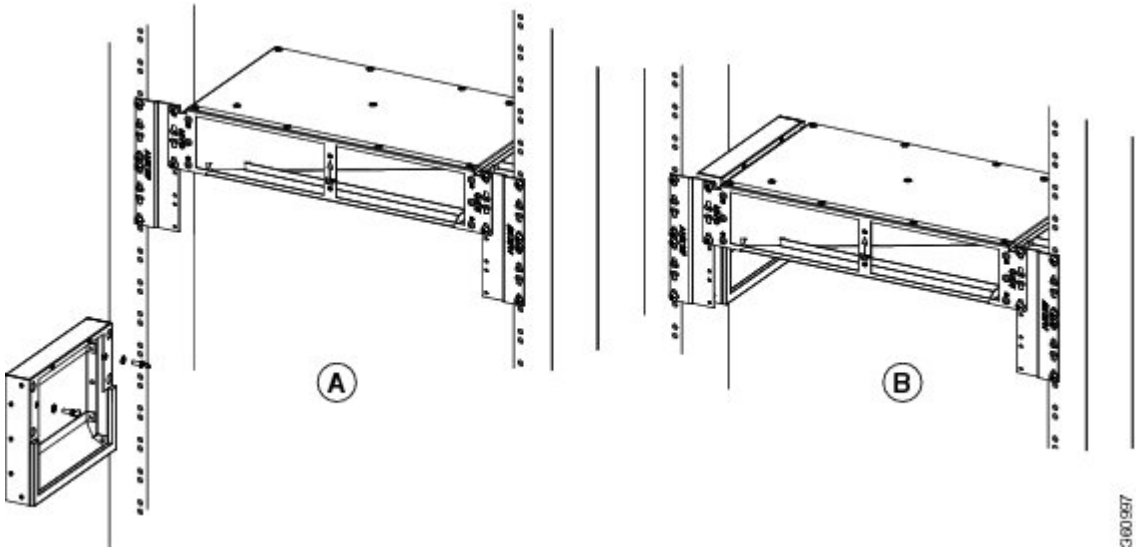

Step 6 Install the vertical plenum to the right of the horizontal air plenum. Follow step 5a to 5c.

Figure 12: Installing the right vertical air plenum

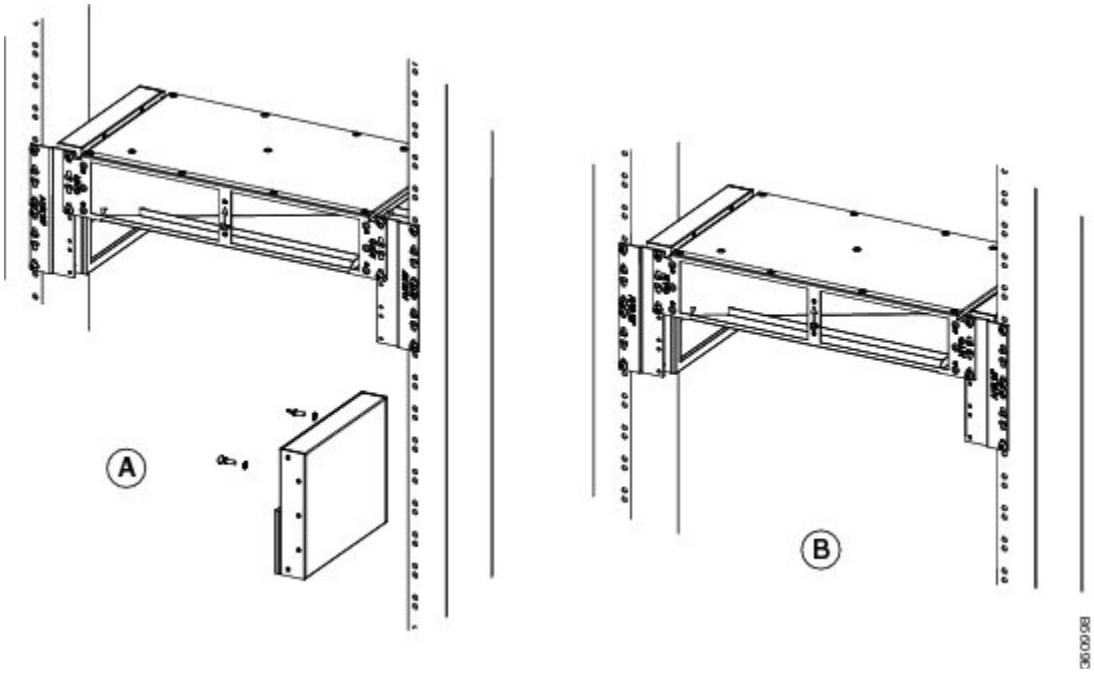

Step 7 Install ANSI 19-inch standard brackets on both sides of the chassis in front position. See DLP-L35 Mounting the 19-inch Brackets on the NCS 2002 Shelf for ANSI Rack Configuration.

Step 8 Install the NCS 2002 empty chassis below the horizontal plenum.

Figure 13: Installing the NCS 2002 chassis below the horizontal air plenum

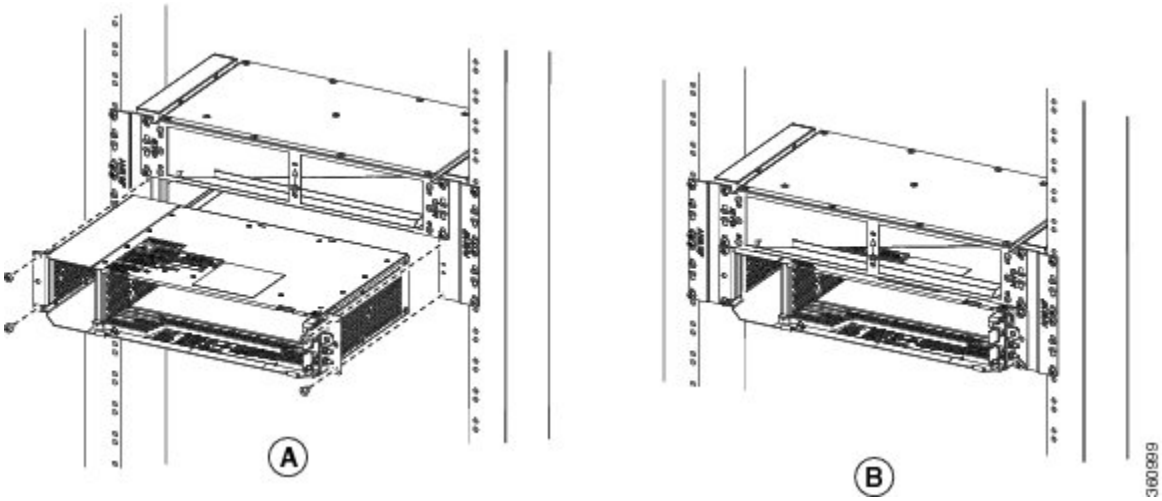

Step 9 Return to your originating procedure (NTP).

DLP-L71 Installing Pre-assembled Air Plenums in ANSI 23-inch Configuration

Purpose	This task installs pre-assembled air plenums for the NCS 2002 shelf in the ANSI 23-inch configuration.
Tools/Equipment	• #2 Phillips Dynamometric screwdriver • Medium slot-head screwdriver • Small slot-head screwdriver • Screws: #12-24 x 3/4 pan-head Phillips mounting screws (8) • Wing head screws (4) • Adapter plates • One air plenum kit (horizontal and vertical air plenum)
Required/As Needed	As needed
Onsite/Remote	Onsite
Security Level	None

Procedure

Step 1 Install the ANSI 23-inch adapter plates on the horizontal air plenum.

Step 2 Align the screws to fix the adapter plates to the shelf. Insert the screws and tighten them to a torque value of 11.5 in-lb (1.3 N-m).

Step 3 Install the vertical air plenum to the right of the horizontal plenum.

Step 4 Install the wing head screws from the internal side of the horizontal plenum and tighten the screws to a torque value of 11.5 in-lb (1.3 N-m).

Step 5 Install the vertical air plenum to the left of the horizontal air plenum. Follow step 4.

Figure 14: Pre-assembling the air plenums

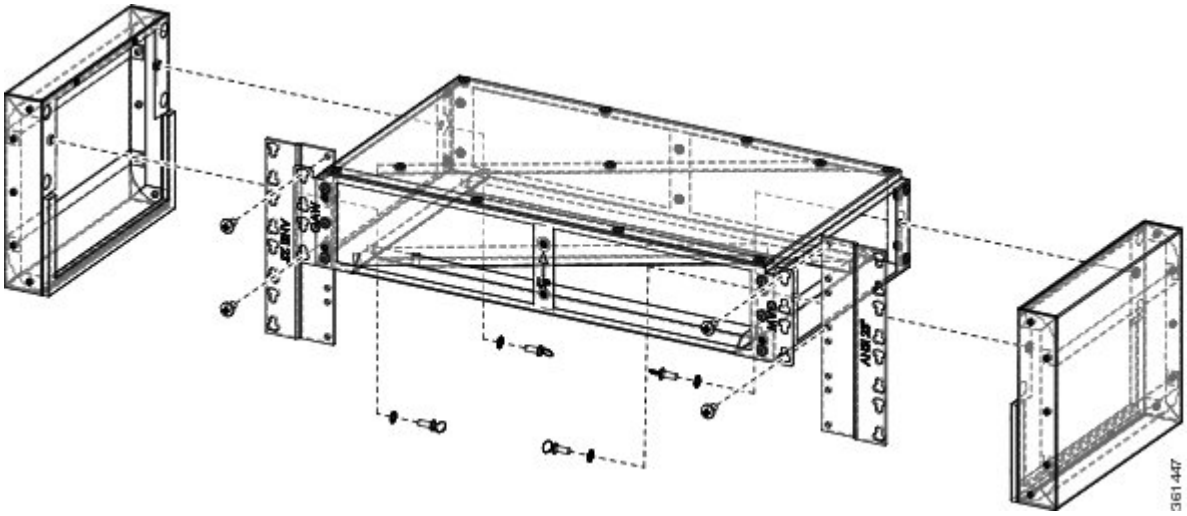

Step 6 Install the pre-assembled air plenum for ANSI 23-inch configuration.

Figure 15: Pre-assembled air plenum

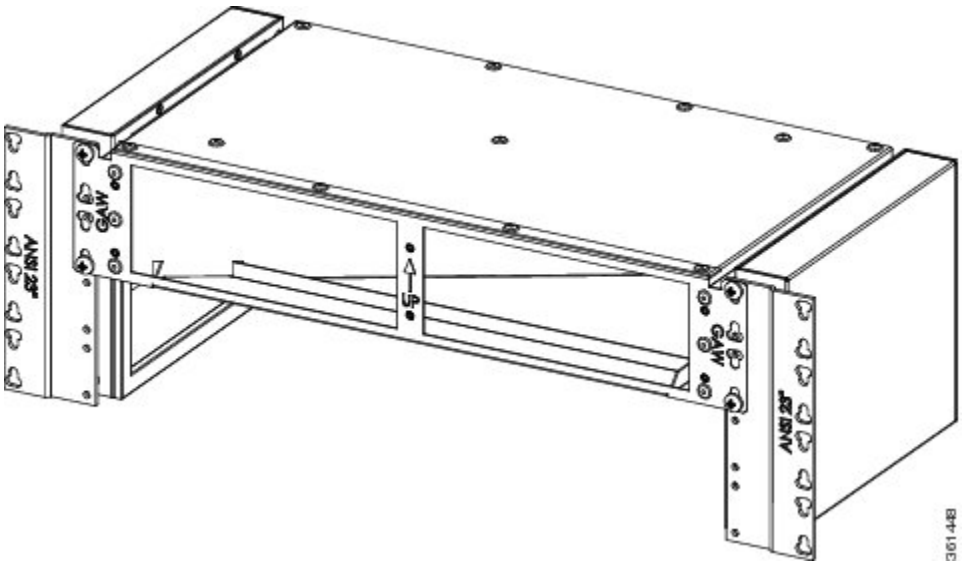

Step 7 Install the empty NCS 2002 chassis between the horizontal plenums.

Step 8 Return to your originating procedure (NTP).

DLP-L70 Installing Air Plenum for NCS 2002 Shelf in ETSI Configuration

Purpose	This task installs the air plenum for the NCS 2002 shelf in the ETSI configuration.
Tools/Equipment	• #2 Phillips Dynamometric screwdriver • Medium slot-head screwdriver • Small slot-head screwdriver • Screws: M6.0 x 20 pan-head Phillips screws (4) • Wing head screws (4) • Adapter plates • One air plenum kit (horizontal and vertical air plenum)
Required/As Needed	As needed
Onsite/Remote	Onsite
Security Level	None

Procedure

Step 1 Install the ETSI adapter plates on the horizontal air plenum.

Step 2 Align the screws to fix the adapter plates to the horizontal air plenum. Insert the screws and tighten them to a torque value of 11.5 in-lb (1.3 N-m) as shown in the following figure.

Figure 16: Installing the adapter plates on the horizontal air plenum

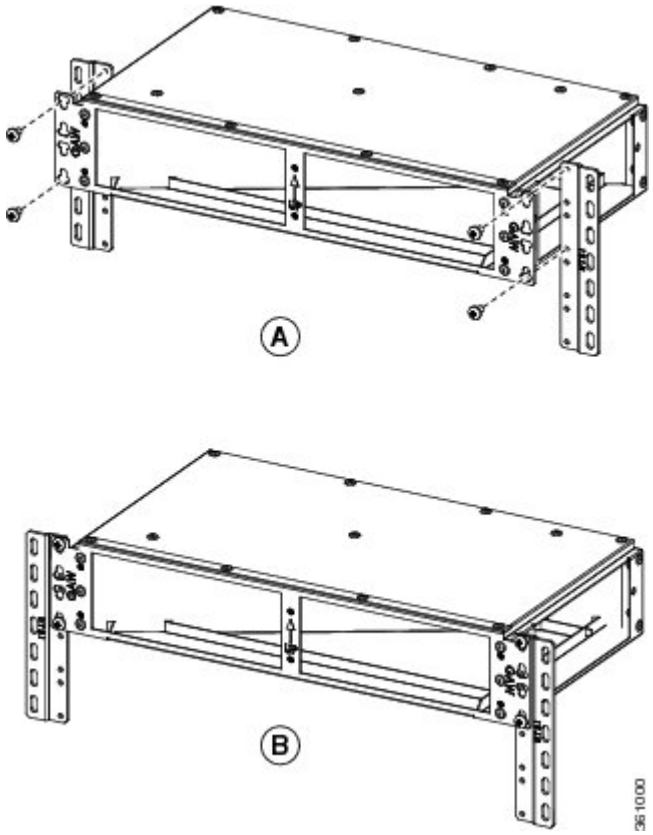

Step 3 Place the horizontal plenum above the chassis slot in the ETSI cabinet.

Step 4 Insert the wing head screws provided with the kit, and tighten to a torque value of 11.5 in-lb (1.3 N-m).

Figure 17: Installing the horizontal air plenum in the ETSI configuration

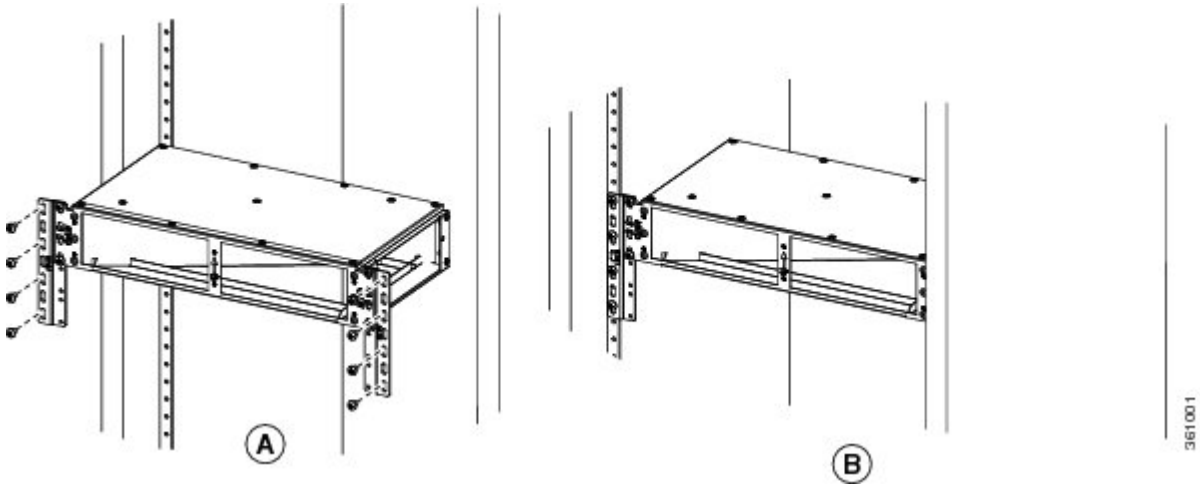

Step 5 Install the vertical air plenum to the left of the horizontal air plenum:

a) Insert the vertical plenum in the free space between the horizontal plenum and cabinet.

b) Install the wing head screws from the internal side of the horizontal plenum as shown in the following figure.
c) Tighten the screws to a torque value of 11.5 in-lb (1.3 N-m).

Figure 18: Installing the left vertical air plenum

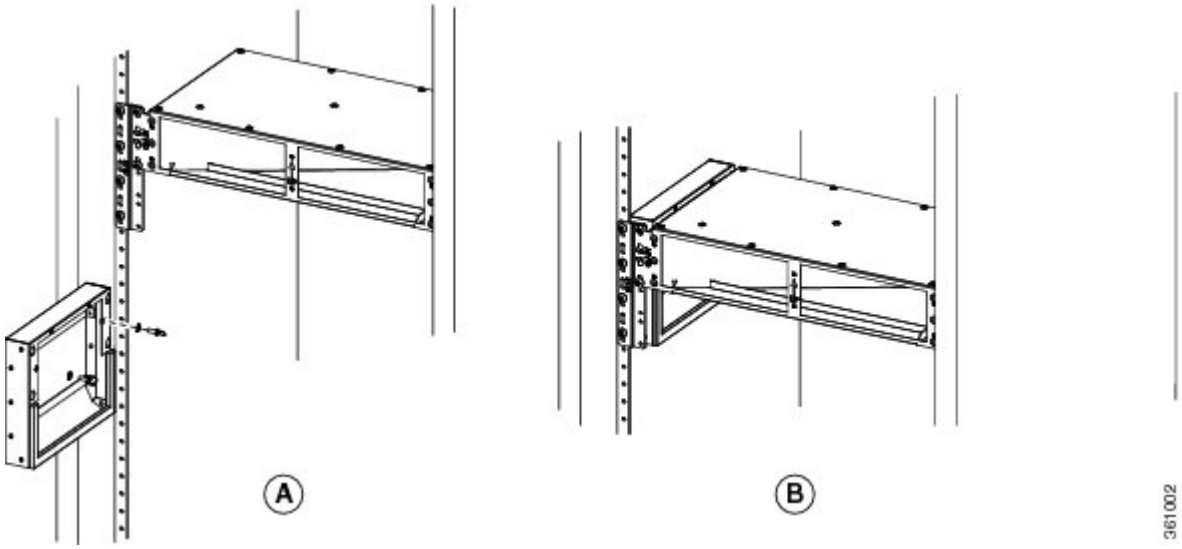

Step 6 Install the vertical air plenum to the right of the horizontal air plenum. Follow steps 5a to 5c.

Figure 19: Installing the right vertical air plenum

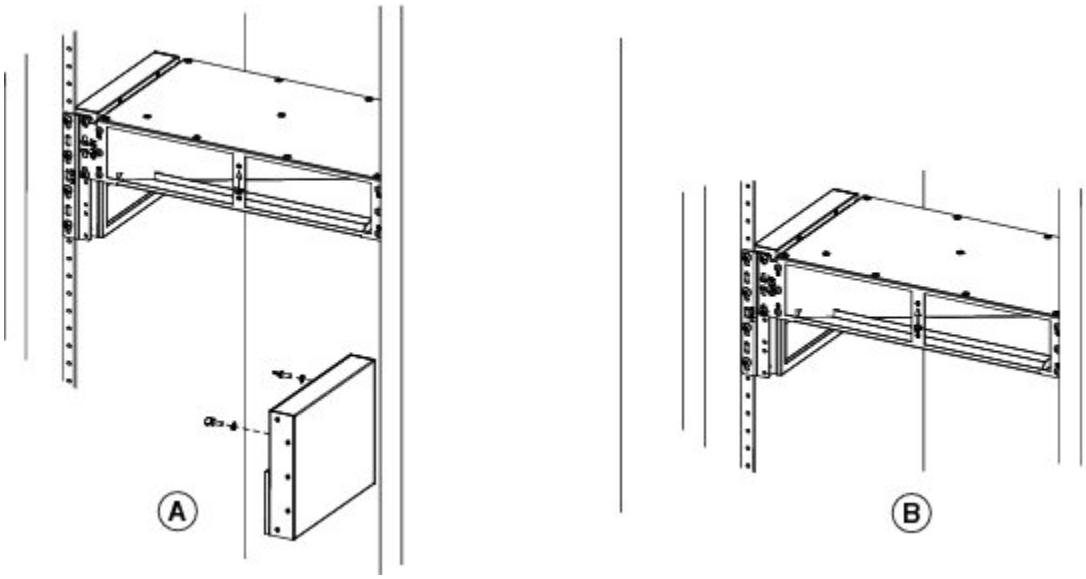

Step 7 Install the ANSI 19-inch standard brackets on both sides of the chassis in front position. See DLP-L35 Mounting the 19-inch Brackets on the NCS 2002 Shelf for ANSI Rack Configuration.

Step 8 Install the NCS 2002 empty chassis below the horizontal plenum.

Figure 20: Installing the NCS 2002 chassis below the horizontal air plenum

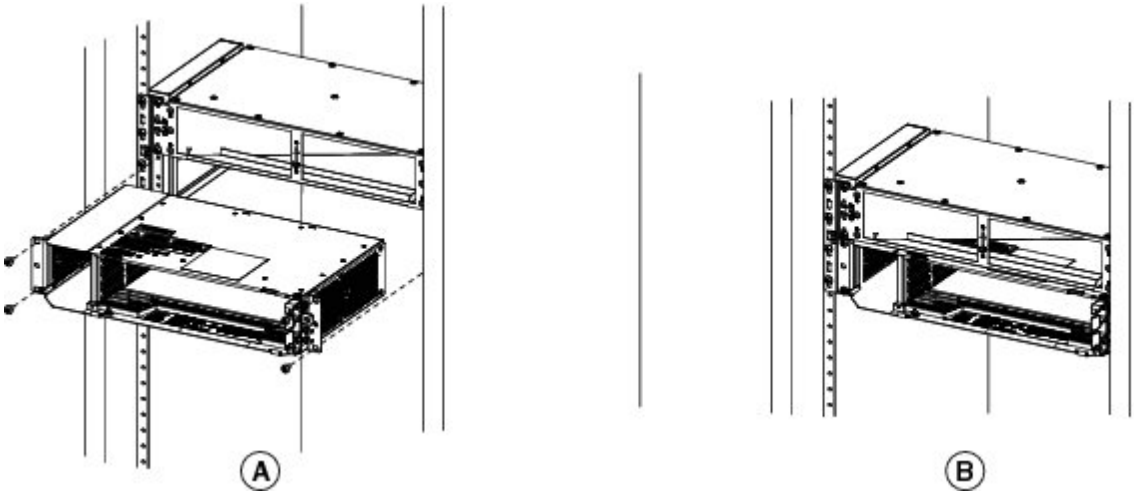

Step 9 Return to your originating procedure (NTP).