CONC TAPI Northbound Interface Description Document

First Published: November 24, 2021

Table of Contents

Preface

This guide provides information about the ONF Transport API (T-API/TAPI) Northbound Interface supported by Cisco Optical Network Controller.

Conventions

This document uses the following conventions.

Convention	Indication
bold font	Commands and keywords and user-entered text appear in **bold font**.
italic font	Document titles, new or emphasized terms, and arguments for which you supply values are in *italic* font.
[ ]	Elements in square brackets are optional.
{x | y | z }	Required alternative keywords are grouped in braces and separated by vertical bars.
[x | y | z]	Optional alternative keywords are grouped in brackets and separated by vertical bars.
string	A nonquoted set of characters. Do not use quotation marks around the string or the string will include the quotation marks.
`courier font`	Terminal sessions and information the system displays appear in `courier` font.
< >	Nonprinting characters such as passwords are in angle brackets.
[ ]	Default responses to system prompts are in square brackets.
!, #	An exclamation point (!) or a pound sign (#) at the beginning of a line of code indicates a comment line.

Note: Means *reader take note*. Notes contain helpful suggestions or references to material not covered in the manual.

SAVE THESE INSTRUCTIONS

Regulatory: Provided for additional information and to comply with regulatory and customer requirements.

Obtaining Documentation and Submitting a Service Request

For information on obtaining documentation, using the Cisco Bug Search Tool (BST), submitting a service request, and gathering additional information, see *What's New in Cisco Product Documentation*.

To receive new and revised Cisco technical content directly to your desktop, you can subscribe to the What's New in Cisco Product Documentation RSS feed. The RSS feeds are a free service.

Introduction

Introduction to T-API

T-API (Transport API) is a standard API developed by the Open Networking Foundation (ONF). A T-API client can be a carrier's orchestration platform or a customer 3rd party application. For transport network administered by a T-API server (for example, Transport SDN Controller), a client can do the following:

- Retrieve equipment and topology information from the network
- Manage connectivity services across the transport network domain

T-API has been designed to allow network operators to deploy SDN across a multi-layer, multi-domain, multi-vendor transport infrastructure, hence extending programmability across their networks. T-API can be leveraged to manage network resources at different levels of abstraction, by being an interface between controllers at different levels of a SDN controller hierarchy. Example of a typical deployment of T-API would be an interface between a set of network domain controllers and an upper-level network orchestrator that acts as a multi-domain or Hierarchical Controller.

CONC TAPI Northbound Interface

Cisco Optical Network Controller (CONC) which acts as an optical domain controller, exposes a standard T-API Northbound interface (NBI) towards northbound clients such as Hierarchical Controller.

The TAPI NBI exposes standard RESTCONF and NETCONF interfaces to northbound clients. Any SDN-C client such as Hierarchical control can communicate with CONC TAPI NBI Server (SDN-C) using any one these protocols and exchange TAPI model information.

TAPI Northbound Interface Description

Overview

TAPI specification is based on the ONF's Core Information Model (CIM) and is defined using UML. The specification is also mapped from UML to YANG modelling language.

CONC NBI supports TAPI Version 2.1.3.

The list of YANG models composing the TAPI information model can be found in the table below.

Table 1 – List of TAPI YANG models

Model	Version	Revision (mm/dd/yyyy)
tapi-common.yang	2.1.3	04/23/2020
tapi-connectivity.yang	2.1.3	06/16/2020
tapi-dsr.yang	2.1.3	04/23/2020
tapi-equipment.yang	2.1.3	04/23/2020
tapi-eth.yang	2.1.3	04/23/2020

tapi-notification.yang	2.1.3	06/16/2020
tapi-oam.yang	2.1.3	04/23/2020
tapi-odu.yang	2.1.3	04/23/2020
tapi-path-computation.yang	2.1.3	04/23/2020
tapi-photonic-media.yang	2.1.3	06/16/2020
tapi-streaming.yang	2.1.3	06/16/2020
tapi-topology.yang	2.1.3	04/23/2020
tapi-virtual-network.yang	2.1.3	06/16/2020

The TAPI abstracts a common set of control plane functions to a set of Service interfaces such as Topology Service, Equipment Service and Connectivity Service.

TAPI Context

T-API is based on a context relationship between a server and client. A Context is an abstraction that allows for logical isolation and grouping of network resource abstractions for specific purposes/applications and/or information exchange with its users/clients over an interface.

The following table lists the TAPI Contexts and the support within CONC TAPI NBI.

Table 2 – TAPI contexts and support within CONC TAPI NBI

TAPI Context	Supported in ONC TAPI NBI	Comments
tapi-common:context	Y	Includes SIPs and all other TAPI contexts
topology-context	Y	Includes Topological representations of the network. It represents both the Layering and Partitioning concepts within the transport network.
connectivity-context	Y	Includes the list of Connectivity-Service and Connection objects created within the TAPI Context
physical-context	Y	Includes the list of Devices and its containing equipment and access ports. Also covers the Physical Spans between the Access Ports.
notification-context	N	Includes the list of notification subscriptions and the list notifications emitted through each notification subscription stream

oam-context	N	Includes OAM services and related entities such as MEG.
path-computation-context	N	Includes the list of Path Computation Services requested to the TAPI server and the set of Path objects computed by the server.
stream-context	N	Includes notification streams
stream-admin-context	N	Includes stream monitoring
virtual-network-context	N	Includes virtual network services

Note: CONC TAPI NBI does not support notification-context and TAPI standard notifications. However, it supports NETCONF Event Notifications.

See *CONC TAPI Northbound Interface API Guide* for description of Protocols and APIs exposed by CONC TAPI NBI.

TAPI Network Layers

The TAPI models the network as a set of layers forming a client-server relationship. The TAPI layer-protocol-name indicates the technology layers supported by TAPI while the layer-protocol-qualifier indicates the sub-layer supported within a specific technology.

The following table indicates the network layers supported within TAPI and CONC TAPI NBI.

Table 3 – TAPI Network layers and support within CONC TAPI NBI

TAPI layer-protocol-name	Supported in ONC TAPI NBI	TAPI layer-protocol-qualifier	Supported List in ONC TAPI NBI	Comments
PHOTONIC_MEDIA	Y	"PHOTONIC_LAYER_QUALIFIER_": [”OTSi”, ”OTSiA”, ”OTSiG”, ”NMC”, ”NMCA”, ”SMC”, ”SMCA”, ”OCH”, ”OMS”, ”OTS”, ”OTSiMC”, ”OTSiMCA”, ”MC”, ”MCA”]	"PHOTONIC_LAYER_QUALIFIER_": [“OTS“, “OMS“, “MC“, “MCA“, “OTSiMC”, “OTSiMCA”]	Models the Photonic Layers as per ITU-T G.872 (2017) version 4
ODU	Y	"ODU_TYPE_": [“ODU0”, “ODU1”, ”ODU2”, ”ODU2E”, ”ODU3”, ”ODU4”, ”ODU_FLEX”, ”ODU_CN”]	"ODU_TYPE_": [”ODU2”, ”ODU2E”, ”ODU3”, ”ODU4”, ”ODU_CN”]	Models the ODU layer as per ITU-T G.872/G.709

DSR	Y	“DIGITAL_SIGNAL_TYPE_" [“GigE”, ”10_GigE_LAN”, ”10_GigE_WAN”, ”40_GigE”, ”100_GigE”, ”FC_100”, ”FC_200”, ”FC_400”, ”FC_800”, ”FC_1200”, ”FC_1600”, ”FC_3200”, ”STM_1”, ”STM_4”, ”STM_16”, ”STM_64”, ”STM_256”, ”OC_3”, ”OC_12”, ”OC_48”, ”OC_192”, ”OC_768”, ”OTU_1”, ”OTU_2”, ”OTU_2E”, ”OTU_3”, ”OTU_4”, ”GPON”, ”XGPON”, ”IB_SDR”, ”IB_DDR”, ”IB_QDR”, ”SBCON_ESCON”, ”DVB_ASI”, ”SDI”, ”SDI_1G5”, ”SDI_3G”]	“DIGITAL_SIGNAL_TYPE _" [”10_GigE_LAN”, ”40_GigE”, ”100_GigE”]	Models a Digital Signal of an unspecified rate such as xGigE, FC-x, STM-x or OTU-k. Represents a generic DSR signal without making any statement on its format or overhead (processing) capabilities.
ETH	N	-	-	Models the ETH layer as per ITU-T G.8010

TAPI Common Context

The tapi-common:context defines the root tree object in TAPI information model. It mainly includes the SIPs and augments all other contexts within TAPI model.

The model of tapi-common:context object is detailed in the table below.

Table 4 – TAPI context object definition

Attribute	Allowed Values/Format	Mode	Support in CONC TAPI NBI	Notes
service-interface-point	List of {service-interface-point}	RO	Y	Provides the list of all SIP objects in the network Provided by tapi-server See Table 5 – TAPI service-interface-point object definition

uuid	"[0-9a-fA-F]{8}[0-9a-fA-F]{4}[0-9a-fA-F]{4}[0-9a-fA-F]{4}[0-9a-fA-F]{12}"	RO	Y	Indicates an identifier that is universally unique within an identifier space (as per RFC 4122) UUID for the context object Provided by tapi-server
name	List of {value-name, value} • "value-name": "CONTEXT_NAME", "value": "[0-9a-zA-Z_]{64}" • "value-name": "VENDOR_NAME", "value": "[0-9a-zA-Z_]{64}"	RO	N	Provides name-value pairs related to context object
topology-context	{topology-context}	RO	Y	Augments the base TAPI Context with TopologyService information Provided by tapi-server See Table 6 – TAPI topology-context object definition
path-computation-context	{path-computation-context}	RO	N	Augments the base TAPI Context with PathComputationService information
connectivity-context	{connectivity-context}	RO	Y	Augments the base TAPI Context with ConnectivityService information Provided by tapi-server See Table 20 – TAPI connectivity-context object definition
oam-context	{oam-context}	RO	N	Augments the base TAPI Context with OamService information

physical-context	{physical-context}	RO	Y	Augments the base TAPI Context with EquipmentService information Provided by tapi-server See Table 42 – TAPI physical-context object definition
virtual-network-context	{virtual-network-context}	RO	N	Augments the base TAPI Context with VirtualNetworkService information
stream-context	{stream-context}	RO	N	Augments the base TAPI Context with stream information
stream-admin-context	{stream-admin-context}	RO	N	Augments the base TAPI Context with stream admin information
notification-context	{notification-context}	RO	N	Augments the base TAPI Context with NotificationService information

TAPI Service Interface Point

The TAPI Service-Interface-Point (SIP) represents the outward customer-facing aspects of the edge-port functions. It provides a limited, simplified view of interest to external clients (e.g. shared addressing, capacity, resource availability, etc.), that enable the clients to request connectivity without the need to understand the provider network internals.

One or more node-edge-points (NEP) may be mapped to a particular SIP for providing it with the actual capacity and forwarding capabilities within the transport network. The SIP's layer-protocol-name/supported-layer-protocol-qualifier indicate the layer at which the connectivity service can be provisioned.

The model of service-interface-point object is detailed in the table below.

Table 5 – TAPI service-interface-point object definition

Attribute	Allowed Values/Format	Mode	Support in CONC TAPI NBI	Notes

layer-protocol-name	["DSR", “ETH”, "ODU", "PHOTONIC_MEDIA"] Note: Only ["PHOTONIC_MEDIA", “ODU”, “DSR”] are supported in CONC TAPI NBI	RO	Y	Indicates the protocol/technology layer supported by the SIP Provided by tapi-server
supported-layer-protocol-qualifier	“DIGITAL_SIGNAL_TYPE_" [“GigE”, ”10_GigE_LAN”, ”10_GigE_WAN”, ”40_GigE”, ”100_GigE”, ”FC_100”, ”FC_200”, ”FC_400”, ”FC_800”, ”FC_1200”, ”FC_1600”, ”FC_3200”, ”STM_1”, ”STM_4”, ”STM_16”, ”STM_64”, ”STM_256”, ”OC_3”, ”OC_12”, ”OC_48”, ”OC_192”, ”OC_768”, ”OTU_1”, ”OTU_2”, ”OTU_2E”, ”OTU_3”, ”OTU_4”, ”GPON”, ”XGPON”, ”IB_SDR”, ”IB_DDR”, ”IB_QDR”, ”SBCON_ESCON”, ”DVB_ASI”, ”SDI”, ”SDI_1G5”, ”SDI_3G”] "ODU_TYPE_": [“ODU0”, “ODU1”, ”ODU2”, ”ODU2E”, ”ODU3”, ”ODU4”, ”ODU_FLEX”, ”ODU_CN”] "PHOTONIC_LAYER_QUALIFIER_": [”OTSi”, ”OTSiA”, ”OTSiG”, ”NMC”, ”NMCA”, ”SMC”, ”SMCA”, ”OCH”, ”OMS”, ”OTS”, ”OTSiMC”, ”OTSiMCA”, ”MC”, ”MCA”]	RO	Y	Indicates the sublayers within the protocol layer Provided by tapi-server

direction	[“BIDIRECTIONAL”, "INPUT", “OUTPUT”, “UNIDENTIFIED_OR_UNKNOWN”] Note: Only [“BIDIRECTIONAL”] is supported in CONC TAPI NBI	RW	Y	Indicates if the SIP has only INPUT flow or OUTPUT flow or both Provided by tapi-server Attribute update from tapi-client is not supported
uuid	“[0-9a-fA-F]{8}[0-9a-fA-F]{4}[0-9a-fA-F]{4}[0-9a-fA-F]{4}[0-9a-fA-F]{12}”	RW	Y	Indicates an identifier that is universally unique within an identifier space (as per RFC 4122) UUID for the SIP object Provided by tapi-server Attribute update from tapi-client is not supported

name	List of {value-name, value} • “value-name”: “SIP_NAME”, “value”: “[0-9a-zA-Z_]{64}” • “value-name”: “INVENTORY_ID”, “value”: “/ne=<deviceName>/r=<rackNo>/sh=<shelfNo>/sl=<slotNo>/s_sl=<subslotNo>/p=<portNo>”	RW	Y	Provides name-value pairs related to the SIP object INVENTORY_ID indicates the physical port with full location on the device that is supporting the SIP. • <deviceName>: The name of the device • <rackNo>: The Rack Number • <shelfNo>: The shelf/chassis id (for active/passive shelf/chassis). In case of passive units with virtual shelf/chassis, the <shelfNo> is filled as 2000+<ruPosition of the passive unit> • <slotNo>: The slot within the chassis where the card/circuit-pack is present • <subslotNo>: The subslot number. A value 0 indicates no subslot. • <portNo>: The port number. If the SIP is supported by a single bidirectional port, the <portNo> contains the port number of the bidirectional port. If the SIP is supported by 2 unidirectional ports (Rx/Tx), the <portNo> contains 2 port numbers separated by comma (Tx port followed by Rx) Provided by tapi-server Attribute update from tapi-client is not supported

administrative-state	["UNLOCKED", "LOCKED"]	RW	Y	Indicates if the SIP is administratively locked from using it or not Provided by tapi-server Attribute update from tapi-client is not supported
operational-state	["ENABLED", "DISABLED"]	RO	Y	Indicates if the SIP is operable or not Provided by tapi-server
lifecycle-state	["PLANNED", "POTENTIAL_AVAILABLE", "POTENTIAL_BUSY", "INSTALLED", "PENDING_REMOVAL"] Note: Only ["INSTALLED"] is supported in CONC TAPI NBI	RO	Y	Indicates the state of the SIP object in the network. • PLANNED: The resource is planned but is not present in the network • POTENTIAL_AVAILABLE: The supporting resources are present in the network and is shared or requires further configuration before use • POTENTIAL_BUSY: The supporting resources are present in the network and is busy or requires further configuration before use • INSTALLED: The resource is present in the network and is capable of providing the service • PENDING_REMOVAL: The resource is marked for removal Provided by tapi-server

total-potential-capacity	{"total-size": {value, unit}, bandwidth-profile} • "total-size": {value, unit} – "value": "[0-9]{8}", – "unit": ["TB", "TBPS", "GB", "GBPS", "MB", "MBPS", "KB", "KBPS", "GHz", "MHz"] Note: “total-size” always fixed to “value”=”0” and “unit”=”GHz” in CONC TAPI NBI. {bandwidth-profile} absent in CONC TAPI NBI.	RO	N	Indicates the total potential capacity/bandwidth available in the SIP for service provisioning Provided by tapi-server with default value. The attribute should be ignored by tapi-client.
available-capacity	{"total-size": {value, unit}, bandwidth-profile} • "total-size": {value, unit} – "value": "[0-9]{8}", – "unit": ["TB", "TBPS", "GB", "GBPS", "MB", "MBPS", "KB", "KBPS", "GHz", "MHz"] Note: “total-size” always fixed to “value”=”0” and “unit”=”GHz” in CONC TAPI NBI. {bandwidth-profile} absent in CONC TAPI NBI.	RO	N	Indicates the amount of free capacity/ bandwidth available in the SIP for service provisioning Provided by tapi-server with default value. The attribute should be ignored by tapi-client.
otsi-service-interface-point-spec	{otsi-service-interface-point-spec}	RW	N	Augments SIPs attached to PHOTONIC_MEDIA NEPs exposing OTSI/OTSiG service provisioning capabilities
media-channel-service-interface-point-spec	{media-channel-service-interface-point-spec}	RW	N	Augments SIPs attached to PHOTONIC_MEDIA NEPs exposing MC service provisioning capabilities

SIPs are created by CONC TAPI NBI when it builds the Day-0 topology of the Node. For every NEP that can be mapped to a service interface, a SIP object shall be created in CONC TAPI NBI. When the NEP is removed, for example as part of the node deletion, it’s mapped SIP object also shall be removed.

CONC TAPI NBI supports SIPs with the following layer-protocol-name/supported-layer-protocol-qualifier. Each type of SIP maps to corresponding NEP having the same layer-protocol-name/supported-layer-protocol-qualifier.

- “PHOTONIC_MEDIA”/”PHOTONIC_LAYER_QUALIFIER_MC”:
  - Every Add/Drop Port on the ROADM node (except the ones connected to a Regen card) is exposed as a “PHOTONIC_MEDIA” / ”PHOTONIC_LAYER_QUALIFIER_MC” SIP in CONC TAPI NBI.
  - This type of SIPs can be used to provision OTSiMCA connectivity services.
- “PHOTONIC_MEDIA”/”PHOTONIC_LAYER_QUALIFIER_OTSi”:
  - Every Line (Trunk) Port on the Transponder node is exposed as a “PHOTONIC_MEDIA” / ”PHOTONIC_LAYER_QUALIFIER_OTSi” SIP in CONC TAPI NBI. The Line (Trunk) ports on Regen card are not exposed as SIPs.
  - Currently, this type of SIPs cannot be used to provision any kind of connectivity services.
- “ODU”/ " ODU_TYPE_" : [”ODU2”, “ODU2E”, ”ODU4”]:
  - Every OTU Client Port on the Transponder node - depending upon its rate - is exposed as a " ODU_TYPE_" : [”ODU2”, “ODU2E”, ”ODU4”] SIP in CONC TAPI NBI.
  - This type of SIPs can be used to provision OTU client connectivity services.
- “DSR”/“DIGITAL_SIGNAL_TYPE_" [”10_GigE_LAN”, ”40_GigE”, ”100_GigE”]:
  - Every DSR Client Port on the Transponder node – depending upon its signal type and rate - is exposed as a “DSR” / “DIGITAL_SIGNAL_TYPE_" [”10_GigE_LAN”, ”40_GigE”, ”100_GigE”] SIP in CONC TAPI NBI.
  - This type of SIPs can be used to provision DSR client connectivity services.

TAPI Topology Context

The TAPI Topology context provides topological representations of the network. It represents both the Layering and Partioning concepts within the transport network.

The TAPI Topology Context model is given in the table below:

Table 6 – TAPI topology-context object definition

Attribute	Allowed Values/Format	Mode	Support in CONC TAPI NBI	Notes
nw-topology-service	{List of {“topology”: {topology-uuid}}, uuid, “name”: List of {value-name, value}}	RO	N	Defines the topology service with references to the list of Topology instances supported

topology	List of {topology}	RO	Y	Provides the list of topology instances supported. Provided by tapi-server See Table 7 – TAPI topology object definition

TAPI Topology

The TAPI Topology describes the underlying topological network. It provides transparent topological-aspects of a Forwarding-Domain (FD) by exposing the topology as a list of Nodes and inter-connected Links.

The TAPI Topology model is given in the table below.

Table 7 – TAPI topology object definition

Attribute	Allowed Values/Format	Mode	Support in CONC TAPI NBI	Notes
node	List of {node}	RO	Y	Provides the list of nodes within the topology Provided by tapi-server See Table 8 – TAPI node object definition
link	List of {link}	RO	Y	Provides the list of links within the topology Provided by tapi-server See Table 17 – TAPI link object definition
layer-protocol-name	List of {["DSR", “ETH”, "ODU", "PHOTONIC_MEDIA"]} Note: Only ["PHOTONIC_MEDIA", “ODU”, “DSR”] are supported in CONC TAPI NBI	RO	Y	Indicates the list of protocol/technology layers supported by the topology Provided by tapi-server

uuid	"[0-9a-fA-F]{8}[0-9a-fA-F]{4}[0-9a-fA-F]{4}[0-9a-fA-F]{4}[0-9a-fA-F]{12}"	RO	Y	Indicates an identifier that is universally unique within an identifier space (as per RFC 4122) UUID for the Topology object Provided by tapi-server
name	List of {value-name, value} • "value-name": "TOPOLOGY_NAME", "value": "[0-9a-zA-Z_]{64}"	RO	N	Provides name-value pairs related to the Topology object

CONC TAPI NBI supports single Topology instance (T0 – Multi-layer topology).

TAPI Node

The TAPI Node represents the opaque forwarding-aspects of the Forwarding-Domain (FD) and describes the edge ports (node-edge-point) and the forwarding capabilities between them. A physical device may be logically decomposed to one or more TAPI nodes.

The TAPI Node model is given in the table below.

Table 8 – TAPI node object definition

Attribute	Allowed Values/Format	Mode	Support in CONC TAPI NBI	Notes
owned-node-edge-point	List of {node-edge-point}	RO	Y	Provides the list of NEPs within the Node Provided by tapi-server See Table 9 – TAPI node-edge-point object definition
aggregated-node-edge-point	List of {topology-uuid, node-uuid, node-edge-point-uuid}	RO	N	References to aggregated NEPs that logically aggregates list of NEPs
node-rule-group	List of {node-rule-group}	RO	N	Defines rules (such as Forwarding/Capacity/Cost/Risk) associated with a set of NEP/CEPs within the node

encap-topology	{topology-uuid}	RO	N	Reference of the Topology contained within the Node
layer-protocol-name	List of {["DSR", “ETH”, "ODU", "PHOTONIC_MEDIA"]} Note: Only ["PHOTONIC_MEDIA", “ODU”, “DSR”] are supported in CONC TAPI NBI	RO	Y	Indicates the list of protocol/technology layers supported by the node
uuid	“[0-9a-fA-F]{8}[0-9a-fA-F]{4}[0-9a-fA-F]{4}[0-9a-fA-F]{4}[0-9a-fA-F]{12}”	RO	Y	Indicates an identifier that is universally unique within an identifier space (as per RFC 4122) UUID for the Node object Provided by tapi-server
name	List of {value-name, value} • “value-name”: “NODE_NAME”, “value”: “[0-9a-zA-Z_]{64}”	RO	Y	Provides name-value pairs related to the Node object Provided by tapi-server
administrative-state	["UNLOCKED", "LOCKED"] Note: Only ["UNLOCKED"] is supported in CONC TAPI NBI	RO	Y	Indicates if the Node is administratively locked from using it or not Provided by tapi-server

operational-state	["ENABLED", "DISABLED"]	RO	Y	Indicates if the Node is operable or not • ENABLED: Indicates that the node's communication status is up and is operational. • DISABLED: Indicates that the node's communication status is down and is deemed not operational. Change in the operational-state of a node does not impact the operational-state of it's contained entities (such as NEP and CEP). Provided by tapi-server
lifecycle-state	["PLANNED", "POTENTIAL_AVAILABLE", "POTENTIAL_BUSY", "INSTALLED", "PENDING_REMOVAL"] <u>Note</u>: Only ["INSTALLED"] is supported in CONC TAPI NBI	RO	Y	Indicates the state of the Node object in the network • PLANNED: The resource is planned but is not present in the network • POTENTIAL_AVAILABLE: The supporting resources are present in the network and is shared or requires further configuration before use • POTENTIAL_BUSY: The supporting resources are present in the network and is busy or requires further configuration before use • INSTALLED: The resource is present in the network and is capable of providing the service • PENDING_REMOVAL: The resource is marked for removal Provided by tapi-server

total-potential-capacity	{"total-size": {value, unit}, bandwidth-profile} • "total-size": {value, unit} – "value": "[0-9]{8}", – "unit": ["TB", "TBPS", "GB", "GBPS", "MB", "MBPS", "KB", "KBPS", "GHz", "MHz"] Note: “total-size” always fixed to “value”=”0” and “unit”=”GHz” in CONC TAPI NBI. {bandwidth-profile} absent in CONC TAPI NBI.	RO	N	Indicates the total potential capacity/ bandwidth available in the Node for transport Provided by tapi-server with default value. The attribute should be ignored by tapi-client.
available-capacity	{"total-size": {value, unit}, bandwidth-profile} • "total-size": {value, unit} – "value": "[0-9]{8}", – "unit": ["TB", "TBPS", "GB", "GBPS", "MB", "MBPS", "KB", "KBPS", "GHz", "MHz"] Note: “total-size” always fixed to “value”=”0” and “unit”=”GHz” in CONC TAPI NBI. {bandwidth-profile} absent in CONC TAPI NBI.	RO	N	Indicates the amount of free capacity/ bandwidth available in the Node for transport Provided by tapi-server with default value. The attribute should be ignored by tapi-client.
cost-characteristic	List of {cost-name, cost-value, cost-algorithm} • “cost-name”: “HOP_COUNT” Note: Always set to the above fixed values in CONC TAPI NBI	RO	N	Indicates the list of costs associated with the Node Provided by tapi-server with default value. The attribute should be ignored by tapi-client.
error-characteristic	String	RO	N	Describes the degree to which the signal propagated can be errored

loss-characteristic	String	RO	N	Describes the acceptable characteristic of lost packets where loss may result from discard due to errors or overflow.
repeat-delivery-characteristic	String	RO	N	Describes characteristics where packet/frame may be delivered more than once
delivery-order-characteristic	String	RO	N	Describes the degree to which packets will be delivered out of sequence
unavailable-time-characteristic	String	RO	N	Describes the duration for which there may be no valid signal propagated
server-integrity-process-characteristic	String	RO	N	Describes the effect of any server integrity enhancement process on the characteristics of the Topological entity
latency-characteristic	List of {traffic-property-name, fixed-latency-characteristic, queing-latency-characteristic, jitter-characteristic, wander-characteristic} • "traffic-property-name": "FIXED_LATENCY" Note: Always set to the above fixed values in CONC TAPI NBI	RO	N	Describes the effect on the latency of a queuing process Provided by tapi-server with default value. The attribute should be ignored by tapi-client.
supporting-physical-span	"physical-span": {physical-span-uuid}	RO	N	References the physical-context Physical Span object supporting the Node

TAPI Node Edge Point

The Node-Edge-Point represents the inward network-facing aspects of the edge-port functions that access the forwarding capabilities provided by the Node. It provides an encapsulation of addressing, mapping, termination, adaptation and OAM functions of one or more transport layers performed at the entry and exit points of the Node.

The NEP shall be mapped to a SIP when it supports the SIP with the necessary capacity and forwarding capabilities within the transport network

The TAPI NEP model is given in the table below.

Table 9 – TAPI node-edge-point object definition

Attribute	Allowed Values/Format	Mode	Support in CONC TAPI NBI	Notes
layer-protocol-name	["DSR", “ETH”, "ODU", "PHOTONIC_MEDIA"] Note: Only ["PHOTONIC_MEDIA", “ODU”, “DSR”] are supported in CONC TAPI NBI	RO	Y	Indicates the protocol/technology layer supported by the NEP Provided by tapi-server
supported-cep-layer-protocol-qualifier	“DIGITAL_SIGNAL_TYPE_" [“GigE”, ”10_GigE_LAN”, ”10_GigE_WAN”, ”40_GigE”, ”100_GigE”, ”FC_100”, ”FC_200”, ”FC_400”, ”FC_800”, ”FC_1200”, ”FC_1600”, ”FC_3200”, ”STM_1”, ”STM_4”, ”STM_16”, ”STM_64”, ”STM_256”, ”OC_3”, ”OC_12”, ”OC_48”, ”OC_192”, ”OC_768”, ”OTU_1”, ”OTU_2”, ”OTU_2E”, ”OTU_3”, ”OTU_4”, ”GPON”, ”XGPON”, ”IB_SDR”, ”IB_DDR”, ”IB_QDR”, ”SBCON_ESCON”, ”DVB_ASI”, ”SDI”, ”SDI_1G5”, ”SDI_3G”] "ODU_TYPE_": [“ODU0”, “ODU1”, ”ODU2”, ”ODU2E”, ”ODU3”, ”ODU4”, ”ODU_FLEX”, ”ODU_CN”] "PHOTONIC_LAYER_QUALIFIER_": [”OTSi”, ”OTSiA”, ”OTSiG”, ”NMC”, ”NMCA”, ”SMC”, ”SMCA”, ”OCH”, ”OMS”, ”OTS”, ”OTSiMC”, ”OTSiMCA”, ”MC”, ”MCA”]	RO	Y	Indicates the sublayers within the protocol layer Provided by tapi-server
aggregated-node-edge-point	List of {topology-uuid, node-uuid, node-edge-point-uuid, node-edge-point->uuid}	RO	N	References the NEPs that logically aggregates to the NEP
mapped-service-interface-point	{service-interface-point-uuid}	RO	Y	References the SIP object that is mapped to the NEP Provided by tapi-server
link-port-direction	[“BIDIRECTIONAL”, "INPUT", “OUTPUT”, “UNIDENTIFIED_OR_UNKNOWN”] Note: Only [“BIDIRECTIONAL”] is supported in CONC TAPI NBI	RO	Y	Indicates if the NEP has only INPUT flow or OUTPUT flow or both Provided by tapi-server

link-port-role	[“SYMMETRIC”, “ROOT”, “LEAF”, “TRUNK”, “UNKNOWN”]	RO	Y	Indicates the role of the NEP as the LinkEnd of the Link Provided by tapi-server
uuid	“[0-9a-fA-F]{8}[0-9a-fA-F]{4}[0-9a-fA-F]{4}[0-9a-fA-F]{4}[0-9a-fA-F]{12}”	RO	Y	Indicates an identifier that is universally unique within an identifier space (as per RFC 4122) UUID for the NEP object Provided by tapi-server

name	List of {value-name, value} • “value-name”: “NEP_NAME”, “value”: “[0-9a-zA-Z_]{64}” • “value-name”: “INVENTORY_ID”, “value”: “/ne=<deviceName>/r=<rackNo>/sh=<shelfNo>/sl=<slotNo>/s_sl=<subslotNo>/p=<portNo>”	RO	Y	Provides name-value pairs related to the NEP object INVENTORY_ID indicates the physical port with full location on the device that is supporting the NEP. • <deviceName>: The name of the device • <rackNo>: The Rack Number • <shelfNo>: The shelf/chassis id (for active/passive shelf/chassis). In case of passive units with virtual shelf/chassis, the <shelfNo> is filled as 2000+<ruPosition of the passive unit> • <slotNo>: The slot within the chassis where the card/circuit-pack is present • <subslotNo>: The subslot number. A value 0 indicates no subslot. • <portNo>: The port number. If the NEP is supported by a single bidirectional port, the <portNo> contains the port number of the bidirectional port. If the NEP is supported by 2 unidirectional ports (Rx/Tx), the <portNo> contains 2 port numbers separated by comma (Tx port followed by Rx) Provided by tapi-server Attribute update from tapi-client is not supported
administrative-state	["UNLOCKED", "LOCKED"]	RO	Y	Indicates if the NEP is administratively locked from using it or not Provided by tapi-server

operational-state	["ENABLED", "DISABLED"]	RO	Y	Indicates if the NEP is operable or not Provided by tapi-server
lifecycle-state	["PLANNED", "POTENTIAL_AVAILABLE", "POTENTIAL_BUSY", "INSTALLED", "PENDING_REMOVAL"] Note: Only ["INSTALLED"] is supported in CONC TAPI NBI	RO	Y	Indicates the state of the NEP object in the network • PLANNED: The resource is planned but is not present in the network • POTENTIAL_AVAILABLE: The supporting resources are present in the network and is shared or requires further configuration before use • POTENTIAL_BUSY: The supporting resources are present in the network and is busy or requires further configuration before use • INSTALLED: The resource is present in the network and is capable of providing the service • PENDING_REMOVAL: The resource is marked for removal Provided by tapi-server
termination-direction	["BIDIRECTIONAL", "SINK", "SOURCE", "UNDEFINED_OR_UNKNOWN"]	RO	Y	Indicates if the layer termination has only SINK flow or SOURCE flow or both Provided by tapi-server
termination-state	["LP_CAN_NEVER_TERMINATE", "LT_NOT_TERMINATED", "TERMINATED_SERVER_TO_ CLIENT_FLOW", "TERMINATED_CLIENT_TO_ SERVER_FLOW", "TERMINATED_BIDIRECTIONAL", "LT_PERMENANTLY_TERMINATED", "TERMINATION_STATE_ UNKNOWN"]	RO	Y	Indicates whether the layer is terminated and if so how Provided by tapi-server

total-potential-capacity	{"total-size": {value, unit}, band-width-profile} • "total-size": {value, unit} – "value": "[0-9]{8}", – "unit": ["TB", "TBPS", "GB", "GBPS", "MB", "MBPS", "KB", "KBPS", "GHz", "MHz"] Note: “total-size” always fixed to “value”=”0” and “unit”=”GHz” in CONC TAPI NBI. {bandwidth-profile} absent in CONC TAPI NBI.	RO	N	Indicates the total potential capacity/bandwidth available in the NEP for service transport Provided by tapi-server with default value. The attribute should be ignored by tapi-client.
available-capacity	{"total-size": {value, unit}, band-width-profile} • "total-size": {value, unit} – "value": "[0-9]{8}", – "unit": ["TB", "TBPS", "GB", "GBPS", "MB", "MBPS", "KB", "KBPS", "GHz", "MHz"] Note: “total-size” always fixed to “value”=”0” and “unit”=”GHz” in CONC TAPI NBI. {bandwidth-profile} absent in CONC TAPI NBI.	RO	N	Indicates the amount of free capacity/ bandwidth available in the NEP for service transport Provided by tapi-server with default value. The attribute should be ignored by tapi-client.
cep-list	List of {connection-end-point}	RO	Y	Holds the list of CEPs created from the NEP Provided by tapi-server See Table 12 – TAPI connection-end-point object definition
media-channel-node-edge-point-spec	{media-channel-node-edge-point-spec}	RO	Y	Augments MC/ OTSiMC NEPs to represent the media channel pool resources supportable, available, and occupied. Provided by tapi-server See Table 10 – TAPI media-channel-node-edge-point-spec object definition

odu-node-edge-point-spec	{odu-node-edge-point-spec}	RO	Y	Augments ODU NEPs to represent client capacity, max client instances and size Provided by tapi-server See Table 11 – TAPI odu-node-edge-point-spec object definition
supporting-access-port	"access-port": {device-uuid, access-port-uuid}	RO	Y	Reference to the physical-context access-port object that is supporting the NEP Bridge between the Logical model and Physical model Provided by tapi-server

The media-channel-node-edge-point-spec model is given in the table below.

Table 10 – TAPI media-channel-node-edge-point-spec object definition

Attribute	Allowed Values/Format	Mode	Support in CONC TAPI NBI	Notes
mc-pool:	{supportable-spectrum, available-spectrum, occupied-spectrum}	RO	Y	Indicates the media channel pool resource Provided by tapi-server
mc-pool: supportable-spectrum	List of {upper-frequency, lower-frequency, “frequency-constraint”: {adjustment-granularity, grid-type}} • “upper-frequency”: “[0-9]{9}” • “lower-frequency”: “[0-9]{9}” • "frequency-constraint": – “adjustment-granularity”: ["G_100GHZ", "G_50GHZ", "G_25GHZ", "G_12_5GHZ", "G_6_25GHZ", "G_3_125GHZ", "UNCON-STRAINED"] – “grid-type”: [“DWDM“,“CWDM“,“FLEX“, “GRIDLESS”, “UNSPECIFIED”]	RO	N	Provides supportable upper/ lower frequency bound of the media channel spectrum specified in MHz, adjustment-granularity in GHz and grid-type
mc-pool: available-spectrum	List of {upper-frequency, lower-frequency, “frequency-constraint”: {adjustment-granularity, grid-type}} • “upper-frequency”: “[0-9]{9}” • “lower-frequency”: “[0-9]{9}” • "frequency-constraint": – “adjustment-granularity”: ["G_100GHZ", "G_50GHZ", "G_25GHZ", "G_12_5GHZ", "G_6_25GHZ", "G_3_125GHZ", "UNCON-STRAINED"] – “grid-type”: [“DWDM“,“CWDM“,“FLEX“, “GRIDLESS”, “UNSPECIFIED”]	RO	N	Provides currently available/free upper/ lower frequency bound of the media channel spectrum specified in MHz, adjustment-granularity in GHz and grid-type

mc-pool: occupied-spectrum	List of {upper-frequency, lower-frequency, “frequency-constraint”: {adjustment-granularity, grid-type}} • “upper-frequency”: “[0-9]{9}” • “lower-frequency”: “[0-9]{9}” • "frequency-constraint": – “adjustment-granularity”: ["G_100GHZ", "G_50GHZ", "G_25GHZ", "G_12_5GHZ", "G_6_25GHZ", "G_3_125GHZ", "UNCON-STRAINED"] – “grid-type”: [“DWDM“,“CWDM“,“FLEX“, “GRIDLESS”, “UNSPECIFIED”] Note: “frequency-constraint” is not supported in CONC TAPI NBI.	RO	Y	Provides currently occupied upper/ lower frequency bound of the media channel spectrum specified in MHz, adjustment-granularity in GHz and grid-type Provided by tapi-server

The odu-node-edge-point-spec model is given in the table below.

Table 11 – TAPI odu-node-edge-point-spec object definition

Attribute	Allowed Values/Format	Mode	Support in CONC TAPI NBI	Notes
odu-pool:	{client-capacity, max-client-instances, max-client-size}	RO	Y	Indicates the odu pool resource Provided by tapi-server
odu-pool: client-capacity	"[0-9]+"	RO	Y	Indicates the total ODU client CEP capacity in Kbits/s Provided by tapi-server
odu-pool: max-client-instances	"[0-9]+"	RO	Y	Indicates the max number of ODU client CEP instances Provided by tapi-server
odu-pool: max-client-size	"[0-9]+"	RO	Y	Indicates the max size of the ODU client CEP Provided by tapi-server

TAPI Connection End Point

The Connection-End-Point represents the ingress/egress port aspects that access the forwarding function provided by the Connection. The Connection-End-Points have a client-server relationship with the Node-Edge-Points.

A CEP shall be referenced by a connectivity-service-end-point (CSEP) when the CEP is part of a Connection that supports the connectivity service to which the CSEP is associated with.

The TAPI CEP model is given in the table below.

Table 12 – TAPI connection-end-point object definition

Attribute	Allowed Values/Format	Mode	Support in CONC TAPI NBI	Notes
layer-protocol-name	["DSR", “ETH”, "ODU", "PHOTONIC_MEDIA"] Note: Only ["PHOTONIC_MEDIA", “ODU”, “DSR”] are supported in CONC TAPI NBI	RO	Y	Indicates the protocol/technology layer supported by the CEP Provided by tapi-server
layer-protocol-qualifier	“DIGITAL_SIGNAL_TYPE_" [“GigE”, ”10_GigE_LAN”, ”10_GigE_WAN”, ”40_GigE”, ”100_GigE”, ”FC_100”, ”FC_200”, ”FC_400”, ”FC_800”, ”FC_1200”, ”FC_1600”, ”FC_3200”, ”STM_1”, ”STM_4”, ”STM_16”, ”STM_64”, ”STM_256”, ”OC_3”, ”OC_12”, ”OC_48”, ”OC_192”, ”OC_768”, ”OTU_1”, ”OTU_2”, ”OTU_2E”, ”OTU_3”, ”OTU_4”, ”GPON”, ”XGPON”, ”IB_SDR”, ”IB_DDR”, ”IB_QDR”, ”SBCON_ESCON”, ”DVB_ASI”, ”SDI”, ”SDI_1G5”, ”SDI_3G”] "ODU_TYPE_": [“ODU0”, “ODU1”, ”ODU2”, ”ODU2E”, ”ODU3”, ”ODU4”, ”ODU_FLEX”, ”ODU_CN”] "PHOTONIC_LAYER_QUALIFIER_": [”OTSi”, ”OTSiA”, ”OTSiG”, ”NMC”, ”NMCA”, ”SMC”, ”SMCA”, ”OCH”, ”OMS”, ”OTS”, ”OTSiMC”, ”OTSiMCA”, ”MC”, ”MCA”]	RO	Y	Indicates the sublayers within the protocol layer Provided by tapi-server
parent-node-edge-point	{topology-uuid, node-uuid, node-edge-point-uuid}	RO	Y	References the parent NEP object that is containing the CEP Provided by tapi-server

client-node-edge-point	List of {topology-uuid, node-uuid, node-edge-point-uuid}	RO	Y	References the client NEP objects created at the client layer of the CEP Present only when there is a client layer for the CEP's own layer Provided by tapi-server
aggregated-connection-end-point	List of {topology-uuid, node-uuid, node-edge-point-uuid, connection-end-point-uuid}	RO	N	References the CEPs that logically aggregates to the CEP
connection-port-direction	["BIDIRECTIONAL", "INPUT", "OUTPUT", "UNIDENTIFIED_OR_UNKNOWN"] Note: Only ["BIDIRECTIONAL"] is supported in CONC TAPI NBI	RO	Y	Indicates if the CEP has only INPUT flow or OUTPUT flow or both Provided by tapi-server
connection-port-role	["SYMMETRIC", "ROOT", "LEAF", "TRUNK", "UNKNOWN"]	RO	Y	Indicates the role of the CEP as the Endpoint of the Forwarding Construct Provided by tapi-server
cep-role	List of {role-name, "connection-spec-reference": {connection-spec-id, connection-spec-name}}	RO	N	Defines the role of the CEP in the context of the connection spec
uuid	"[0-9a-fA-F]{8}[0-9a-fA-F]{4}[0-9a-fA-F]{4}[0-9a-fA-F]{4}[0-9a-fA-F]{12}"	RO	Y	Indicates an identifier that is universally unique within an identifier space (as per RFC 4122) UUID for the CEP object Provided by tapi-server
name	List of {value-name, value} • "value-name": "CEP_NAME", "value": "[0-9a-zA-Z_]{64}"	RO	Y	Provides name-value pairs related to the SIP object Provided by tapi-server
operational-state	["ENABLED", "DISABLED"]	RO	Y	Indicates if the CEP is operable or not Provided by tapi-server

lifecycle-state	["PLANNED", "POTENTIAL_AVAILABLE", "POTENTIAL_BUSY", "INSTALLED", "PENDING_REMOVAL"] Note: Only ["INSTALLED"] is supported in CONC TAPI NBI	RO	Y	Indicates the state of the CEP object in the network • PLANNED: The resource is planned but is not present in the network • POTENTIAL_AVAILABLE: The supporting resources are present in the network and is shared or requires further configuration before use • POTENTIAL_BUSY: The supporting resources are present in the network and is busy or requires further configuration before use • INSTALLED: The resource is present in the network and is capable of providing the service • PENDING_REMOVAL: The resource is marked for removal Provided by tapi-server
termination-direction	["BIDIRECTIONAL", "SINK", "SOURCE", "UNDEFINED_OR_UNKNOWN"] Note: Only [“BIDIRECTIONAL”] is supported in CONC TAPI NBI	RO	Y	Indicates if the layer termination has only SINK flow or SOURCE flow or both Provided by tapi-server
termination-state	["LP_CAN_NEVER_TERMINATE", "LT_NOT_TERMINATED", "TERMINATED_SERVER_TO_CLIENT_FLOW", "TERMINATED_CLIENT_TO_SERVER_FLOW", "TERMINATED_BIDIRECTIONAL", "LT_PERMENANTLY_TERMINATED", "TERMINATION_STATE_UNKNOWN"]	RO	Y	Indicates whether the layer is terminated and if so how Provided by tapi-server

otsi-connection-end-point-spec	{otsi-connection-end-point-spec}	RO	Y	Augments CEP at the PHOTONIC_MEDIA layer with OTSi layer-protocol-qualifier. If present on any layer other than OTSi, this attribute should be ignored by tapi-client. Provided by tapi-server See Table 13 – TAPI otsi-connection-end-point-spec object definition
otsi-assembly-connection-end-point-spec	{otsi-assembly-connection-end-point-spec}	RO	N	Augments CEP at the PHOTONIC_MEDIA layer with OTSiA layer-protocol-qualifier.
media-channel-connection-end-point-spec	{media-channel-connection-end-point-spec}	RO	Y	Augments CEPs at the PHOTONIC_MEDIA layer with MC/OTSiMC layer-protocol-qualifier. Provided by tapi-server See Table 14 – TAPI media-channel-connection-end-point-spec object definition
ots-connection-end-point-spec	{ots-connection-end-point-spec}	RO	Y	Augments CEPs at the PHOTONIC_MEDIA layer with OTS layer-protocol-qualifier Provided by tapi-server See Table 15 – TAPI ots-connection-end-point-spec object definition
media-channel-assembly-spec	{media-channel-assembly-spec}	RO	N	Unused/empty model
mep-mip-list	{List of {"mip": {meg-uuid, mip-local-id}}, List of {"mep": {meg-uuid, mep-local-id}}}	RO	N	Augments CEP that has associated MEP/MIP objects

odu-connection-end-point-spec	{odu-connection-end-point-spec}	RO	Y	Augments CEPs at the ODU layer If present on any layer other than ODU, this attribute should be ignored by tapi-client. Provided by tapi-server See Table 16 – TAPI odu-connection-end-point-spec object definition
eth-connection-end-point-spec	{eth-connection-end-point-spec}	RO	N	Augments CEPs at the ETH layer If present, this attribute should be ignored by tapi-client.

The otsi-connection-end-point-spec model is given in the table below.

Table 13 – TAPI otsi-connection-end-point-spec object definition

Attribute	Allowed Values/Format	Mode	Support in CONC TAPI NBI	Notes
otsi-termination:	{selected-central-frequency, selected-application-identifier, selected-modulation, selected-spectrum, transmited-power, received-power, laser-properties }	RO	Y	Provides OTSi termination data Provided by tapi-server

otsi-termination: selected-central-frequency	{“frequency-constraint”: {adjustment-granularity, grid-type}, central-frequency} • "frequency-constraint": – “adjustment-granularity”: ["G_100GHZ", "G_50GHZ", "G_25GHZ", "G_12_5GHZ", "G_6_25GHZ", "G_3_125GHZ", "UNCON-STRAINED"] – “grid-type”: [“DWDM“,“CWDM“,“FLEX“, “GRIDLESS”, “UNSPECIFIED”] • “central-frequency”: “[0-9]{9}” <u>Note</u>: “frequency-constraint” is not supported in CONC TAPI NBI	RO	Y	Specifies the selected central frequency of the OTSi signal in MHz, adjustment-granularity in GHz and grid-type. Provided by tapi-server
otsi-termination: selected-application-identifier	{application-identifier-type, application-code} • “application-identifier-type”: [”PROPRIETARY”, ”ITUT_G959_1”, ”ITUT_G698_1”, ”ITUT_G698_2”, ”ITUT_G696_1”, ”ITUT_G695”] • “application-code”: "[0-9a-zA-Z_]{64}"	RO	N	Indicates the selected Application Identifier that is used by the OCh trail termination function
otsi-termination: selected-modulation	["RZ", "NRZ", "BPSK", "DPSK", "QPSK", "8QAM", "16QAM", "PAM4", "PAM8", "UNDEFINED"]	RO	Y	Indicates the selected modulation used at the OTSi source Provided by tapi-server

otsi-termination: selected-spectrum	{upper-frequency, lower-frequency, “frequency-constraint”: {adjustment-granularity, grid-type}} • “upper-frequency”: “[0-9]{9}” • “lower-frequency”: “[0-9]{9}” • "frequency-constraint": – “adjustment-granularity”: ["G_100GHZ", "G_50GHZ", "G_25GHZ", "G_12_5GHZ", "G_6_25GHZ", "G_3_125GHZ", "UNCON-STRAINED"] – “grid-type”: [“DWDM“,“CWDM“,“FLEX“, “GRIDLESS”, “UNSPECIFIED”] <u>Note</u>: “frequency-constraint” is not supported in CONC TAPI NBI.	RO	Y	Provides selected upper/ lower frequency bound of the OTSi signal specified in MHz, adjustment-granularity in GHz and grid-type Provided by tapi-server
otsi-termination: transmited-power	{total-power, power-spectral-density} • “total-power”: “[0-9].[0-9]{7}” • “power-spectral-density”: “[0-9].[0-9]{7}”	RO	N	Indicates the measured power at the OTSi transmitter
otsi-termination: received-power	{total-power, power-spectral-density} • “total-power”: “[0-9].[0-9]{7}” • “power-spectral-density”: “[0-9].[0-9]{7}”	RO	N	Indicates the measured power at the OTSi receiver
otsi-termination: laser-properties	{laser-status, laser-application-type, laser-bias-current, laser-temperature} • “laser-status”: ["ON", "OFF", "PULSING", "UNDEFINED"] • “laser-application-type”: ["PUMP", "MODULATED", "PULSE"] • “laser-bias-current”: "[0-9].[0-9]{7}" • “laser-temperature”: "[0-9].[0-9]{7}"	RO	N	Provides properties of the laser

The media-channel-connection-end-point-spec model is given in the table below.

Table 14 – TAPI media-channel-connection-end-point-spec object definition

Attribute	Allowed Values/Format	Mode	Support in CONC TAPI NBI	Notes

media-channel:	{occupied-spectrum, measured-power-ingress, measured-power-egress}	RO	Y	Provides occupied spectrum and measured power data Provided by tapi-server
media-channel: occupied-spectrum	{upper-frequency, lower-frequency, “frequency-constraint”: {adjustment-granularity, grid-type}} • “upper-frequency”: “[0-9]{9}” • “lower-frequency”: “[0-9]{9}” • "frequency-constraint": – “adjustment-granularity”: ["G_100GHZ", "G_50GHZ", "G_25GHZ", "G_12_5GHZ", "G_6_25GHZ", "G_3_125GHZ", "UNCON-STRAINED"] – “grid-type”: [“DWDM“,“CWDM“,“FLEX“, “GRIDLESS”, “UNSPECIFIED”] <u>Note</u>: “frequency-constraint” is not supported in CONC TAPI NBI.	RO	Y	Provides occupied upper/ lower frequency bound of the media channel spectrum specified in MHz, adjustment-granularity in GHz and grid-type Provided by tapi-server
media-channel: measured-power-ingress	{total-power, power-spectral-density} • “total-power”: “[0-9].[0-9]{7}” • “power-spectral-density”: “[0-9].[0-9]{7}” <u>Note</u>: “power-spectral-density” is not supported in CONC TAPI NBI.	RO	Y	Indicates the actual power measured at the ingress Supported on OTSiMC CEPs of ROADM Add/Drop and Degree ports. It provides the carrier-level power at the ingress of the CEP. The value is updated at 15min granularity (configurable). Provided by tapi-server

media-channel: measured-power-egress	{total-power, power-spectral-density} • “total-power”: “[0-9].[0-9]{7}” • “power-spectral-density”: “[0-9].[0-9]{7}” Note: “power-spectral-density” is not supported in CONC TAPI NBI.	RO	Y	Indicates the actual power measured at the egress Supported on OTSiMC CEPs of ROADM Add/Drop and Degree ports. It provides the carrier-level power at the egress of the CEP. The value is updated at 15min granularity (configurable). Provided by tapi-server

The ots-connection-end-point-spec model is given in the table below.

Table 15 – TAPI ots-connection-end-point-spec object definition

Attribute	Allowed Values/Format	Mode	Support in CONC TAPI NBI	Notes
ots-media-channel:	{occupied-spectrum, measured-power-ingress, measured-power-egress}	RO	Y	Provides occupied spectrum and measured power data Provided by tapi-server
ots-media-channel: occupied-spectrum	{upper-frequency, lower-frequency, “frequency-constraint”: {adjustment-granularity, grid-type}} • “upper-frequency”: “[0-9]{9}” • “lower-frequency”: “[0-9]{9}” • "frequency-constraint": – “adjustment-granularity”: ["G_100GHZ", "G_50GHZ", "G_25GHZ", "G_12_5GHZ", "G_6_25GHZ", "G_3_125GHZ", "UNCON-STRAINED"] – “grid-type”: [“DWDM“,“CWDM“,“FLEX“, “GRIDLESS”, “UNSPECIFIED”]	RO	N	Provides occupied upper/ lower frequency bound of the OTS media channel spectrum specified in MHz, adjustment-granularity in GHz and grid-type

ots-media-channel: measured-power-ingress	{total-power, power-spectral-density} • "total-power": "[0-9].[0-9]{7}" • "power-spectral-density": "[0-9].[0-9]{7}" Note: "power-spectral-density" is not supported in CONC TAPI NBI.	RO	Y	Indicates the actual power measured at the ingress Supported on OTS CEPs of ROADM/ILA Degree/Line ports. It provides the multiplexed optical channel power (without OSC) at the ingress of the CEP (before the (pre-)amplification stage). The value is updated at 15min granularity (configurable). Provided by tapi-server
ots-media-channel: measured-power-egress	{total-power, power-spectral-density} • "total-power": "[0-9].[0-9]{7}" • "power-spectral-density": "[0-9].[0-9]{7}" Note: "power-spectral-density" is not supported in CONC TAPI NBI.	RO	Y	Indicates the actual power measured at the egress Supported on OTS CEPs of ROADM/ILA Degree/Line ports. It provides the multiplexed optical channel power (without OSC) at the egress of the CEP (after the (booster-)amplification stage). The value is updated at 15min granularity (configurable). Provided by tapi-server

The odu-connection-end-point-spec model is given in the table below.

Table 16 – TAPI odu-connection-end-point-spec object definition

Attribute	Allowed Values/Format	Mode	Support in CONC TAPI NBI	Notes

odu-common:	{odu-type, odu-rate, odu-rate-tolerance}	RO	Y	Provides common ODU termination point attributes Provided by tapi-server
odu-common: odu-type	"ODU_TYPE_": [“ODU0”, “ODU1”, ”ODU2”, ”ODU2E”, ”ODU3”, ”ODU4”, ”ODU_FLEX”, ”ODU_CN”]	RO	Y	Specifies the type of the ODU termination point Provided by tapi-server
odu-common: odu-rate	“[0-9]{12}”	RO	Y	Indicates the rate of the ODU termination point in Kbits/s Provided by tapi-server
odu-common: odu-rate-tolerance	“[0-9]{12}”	RO	N	Indicates the rate tolerance of the ODU termination point
odu-common: number-of-odu-c	“[0-9]{12}”	RO	Y	Specifies the number of ODUC instances of the ODUCn Provided by tapi-server
odu-term-and-adapter:	{opu-tributary-slot-size, auto-payload-type, configured-client-type, configured-mapping-type, accepted-payload-type, fec-parameters, odu-cn-effective-time-slot-list}	RO	N	Provides attributes associated with the client adaptation function of the server layer TTP. It is present only if the CEP contains a TTP
odu-term-and-adapter: opu-tributary-slot-size	["1G25", "2G5"]	RO	N	Indicates the slot size of the ODU CTP
odu-term-and-adapter: auto-payload-type	[“true”, “false”]	RO	N	This attribute is applicable when the ODU CTP represents a lower order ODU CTP Source at the client layer of the ODUP/ODUj-21 adaptation function. It indicates if the adaptation source function shall fall back to the payload type PT=20 if the conditions specified in 14.3.10.1/G.798 are satisfied

odu-term-and-adapter: configured-client-type	“DIGITAL_SIGNAL_TYPE_" [“GigE”, ”10_GigE_LAN”, ”10_GigE_WAN”, ”40_GigE”, ”100_GigE”, ”FC_100”, ”FC_200”, ”FC_400”, ”FC_800”, ”FC_1200”, ”FC_1600”, ”FC_3200”, ”STM_1”, ”STM_4”, ”STM_16”, ”STM_64”, ”STM_256”, ”OC_3”, ”OC_12”, ”OC_48”, ”OC_192”, ”OC_768”, ”OTU_1”, ”OTU_2”, ”OTU_2E”, ”OTU_3”, ”OTU_4”, ”GPON”, ”XGPON”, ”IB_SDR”, ”IB_DDR”, ”IB_QDR”, ”SBCON_ESCON”, ”DVB_ASI”, ”SDI”, ”SDI_1G5”, ”SDI_3G”]	RO	N	Indicates the type of the client CTP of the server ODU TTP
odu-term-and-adapter: configured-mapping-type	["AMP", "BMP", "GFP-F", "GMP", "TTP_GFP_BMP", "NULL"]	RO	N	Indicates the configured mapping type
odu-term-and-adapter: accepted-payload-type	{named-payload-type, hex-payload-type} • “named-payload-type”: ["UN-KNOWN", "UNINTERPRETABLE"] • “hex-payload-type”: "[0-9]{64}"	RO	N	This attribute is applicable when the ODU CTP represents a lower order ODU CTP Sink at the client layer of the ODUP/ODU[i]j or ODUP/ODUj-21 adaptation function. This attribute is a 2-digit Hex code that indicates the new accepted payload type
odu-term-and-adapter: fec-parameters	{pre-fec-ber, post-fec-ber, correct-ed-bytes, corrected-bits, uncorrecta-ble-bytes, uncorrectable-bits} • “pre-fec-ber”: "[0-9]{64}" • ”post-fec-ber”: "[0-9]{64}" • ”corrected-bytes”: "[0-9]{64}" • ”corrected-bits”: "[0-9]{64}" • ”uncorrectable-bytes”: "[0-9]{64}" • ”uncorrectable-bits”: "[0-9]{64}"	RO	N	Indicates the FEC related performance parameters

odu-term-and-adapter: odu-cn-effective-time-slot-list	"[0-9]{64}"	RO	N	This attribute contains a set of distinct integers (e.g., 2, 3, 5, 9, 15, 34 representing the tributary slots TS#1.2, TS#1.3, TS#1.5, TS#1.9, TS#1.15, and TS#2.14) which represents the list of effective time slots which are available for carrying ODUk clients. Each entry in the list is an integer value (P) representing the time slot name TS#A.B. The mapping between P and A & B is: A = [P/20] + 1; B = P - (P/20]*20; where the square bracket represents the whole integer.
odu-ctp:	{tributary-slot-list, tributary-port-number, accepted-msi}	RO	N	Provides attributes associated with the ODU CTP. It is present only if the CEP contains a CTP

odu-ctp: tributary-slot-list	List of {"[0-9]{64}"}	RO	N	This attribute contains a set of distinct integers (e.g. 2, 3, 5, 9, 15 representing the tributary slots TS#2, TS#3, TS#5, TS#9 and TS#15) which represents the resources occupied by the ODUk CTP. In case the ODU server layer is an ODUCn, each entry in the list is an integer value (P) representing the time slot name TS#A.B (e.g. 2, 3, 5, 9, 15, 34 representing the tributary slots TS#1.2, TS#1.3, TS#1.5, TS#1.9, TS#1.15, and TS#2.14). The mapping between P and A & B is: A = [P/20] + 1; B = P - (P/20]*20; where the square bracket represents the whole integer. This attribute applies when the ODUk CTP is carried by a sever layer ODU TTP object. It will not apply if this ODUk CTP object is directly carried by an OTUk TTP object (i.e. OTUk has no tributary slots).

odu-ctp: tributary-port-number	"[0-9]{64}"	RO	N	Identifies the tributary port number that is associated with the ODUk CTP. This attribute applies when the ODUk CTP is multiplexed into a server layer ODU TTP object. It will not apply if this ODUk CTP object is directly mapped into an OTUk TTP object (i.e. OTUk has no tributary slots).
odu-ctp: accepted-msi	String	RO	N	This attribute is applicable when the ODU CTP object instance represents a lower order ODU1 or ODU2 CTP Sink at the client layer of the ODU3P/ODU12 adaptation function or represents a lower order ODUj CTP Sink at the client layer of the ODUP/ODUj-21 adaptation function. This attribute is a 1-byte field that represents the accepted multiplex structure of the adaptation function.
odu-protection:	{aps-enable, aps-level}	RO	N	Provides attributes related to ODU protection
odu-protection: aps-enable	[“true”, “false”]	RO	N	Indicates enabling/disabling of the automatic protection switching (APS) capability at the transport adaptation function represented by ODU CTP

odu-protection: aps-level	"[0-9]{64}"	RO	N	Indicates configuration of automatic protection switching (APS) level that should operate at the transport adaptation function that is represented by the ODU CTP

TAPI Link

TAPI Link represent the effective adjacency between two or more associated Nodes in a Topology. It is terminated by Node-Edge-Points of the associated Nodes.

The TAPI Link model is given in the table below.

Table 17 – TAPI link object definition

Attribute	Allowed Values/Format	Mode	Support in CONC TAPI NBI	Notes
node-edge-point	List of {topology-uuid, node-uuid, node-edge-point-uuid}	RO	Y	References the NEPs that are the LinkEnds Provided by tapi-server
layer-protocol-name	["DSR", “ETH”, "ODU", "PHOTONIC_MEDIA"] Note: Only ["PHOTONIC_MEDIA"] is supported in CONC TAPI NBI	RO	Y	Indicates the protocol/technology layer supported by the Link Provided by tapi-server
direction	["BIDIRECTIONAL", "UNIDIRECTIONAL", "UNDEFINED_OR_UNKNOWN"] Note: Only ["BIDIRECTIONAL"] is supported in CONC TAPI NBI	RO	Y	Indicates the directionality of the Link Provided by tapi-server

resilience-type	{restoration-policy, protection-type} • restoration-policy: ["PER_DOMAIN_RESTORATION", "END_TO_END_ RESTORATION", "NA"] • protection-type: ["NO_PROTECTON", "ONE_PLUS_ ONE_ PROTECTION", "ONE_PLUS_ONE_ PROTEC-TION_WITH_ DYNAM-IC_RESTORATION", "PERMA-NENT_ONE_ PLUS_ONE_PROTECTION", "ONE_FOR_ONE_PROTECTION", "DYNAMIC_ RESTORATION", "PRE_COMPUTED_RESTORATION" , "ONE_PLUS_ONE_PROTECTION _WITH_PRE_COMPUTED _RESTORATION"]	RO	N	Indicates the resilience characteristic of the Link
uuid	“[0-9a-fA-F]{8}[0-9a-fA-F]{4}[0-9a-fA-F]{4}[0-9a-fA-F]{4}[0-9a-fA-F]{12}”	RO	Y	Indicates an identifier that is universally unique within an identifier space (as per RFC 4122) UUID for the Link object Provided by tapi-server
name	List of {value-name, value} • “value-name”: “LINK_NAME”, “value”: “[0-9a-zA-Z_]{64}”	RO	Y	Provides name-value pairs related to the Link object Provided by tapi-server
administrative-state	["UNLOCKED", "LOCKED"]	RO	Y	Indicates if the Link is administratively locked from using it or not Provided by tapi-server
operational-state	["ENABLED", "DISABLED"]	RO	Y	Indicates if the Link is operable or not Provided by tapi-server

lifecycle-state	["PLANNED", "POTENTIAL_AVAILABLE", "POTENTIAL_BUSY", "INSTALLED", "PENDING_REMOVAL"] Note: Only ["INSTALLED"] is supported in CONC TAPI NBI	RO	Y	Indicates the state of the Link object in the network • PLANNED: The resource is planned but is not present in the network • POTENTIAL_AVAILABLE: The supporting resources are present in the network and is shared or requires further configuration before use • POTENTIAL_BUSY: The supporting resources are present in the network and is busy or requires further configuration before use • INSTALLED: The resource is present in the network and is capable of providing the service • PENDING_REMOVAL: The resource is marked for removal Provided by tapi-server
total-potential-capacity	{"total-size": {value, unit}, bandwidth-profile} • "total-size": {value, unit} – "value": "[0-9]{8}", – "unit": ["TB", "TBPS", "GB", "GBPS", "MB", "MBPS", "KB", "KBPS", "GHz", "MHz"] Note: “total-size” always fixed to “value”=”0” and “unit”=”GHz” in CONC TAPI NBI. {bandwidth-profile} absent in CONC TAPI NBI.	RO	N	Indicates the total potential capacity/bandwidth available in the Link for transport Provided by tapi-server with default value. The attribute should be ignored by tapi-client.

available-capacity	{"total-size": {value, unit}, band-width-profile} • "total-size": {value, unit} – "value": "[0-9]{8}", – "unit": ["TB", "TBPS", "GB", "GBPS", "MB", "MBPS", "KB", "KBPS", "GHz", "MHz"] Note: “total-size” always fixed to “value”=”0” and “unit”=”GHz” in CONC TAPI NBI. {bandwidth-profile} absent in CONC TAPI NBI.	RO	N	Indicates the amount of free capacity/ bandwidth available in the Link for transport Provided by tapi-server with default value. The attribute should be ignored by tapi-client.
cost-characteristic	List of {cost-name, cost-value, cost-algorithm} • “cost-name”: “LENGTH”, “cost-value”: “0” Note: Always set to the above fixed values in CONC TAPI NBI	RO	N	Indicates the list of costs associated with the Node Provided by tapi-server with default value. The attribute should be ignored by tapi-client.
error-characteristic	String	RO	N	Describes the degree to which the signal propagated can be errored
loss-characteristic	String	RO	N	Describes the acceptable characteristic of lost packets where loss may result from discard due to errors or overflow.
repeat-delivery-characteristic	String	RO	N	Describes characteristics where packet/frame may be delivered more than once
delivery-order-characteristic	String	RO	N	Describes the degree to which packets will be delivered out of sequence
unavailable-time-characteristic	String	RO	N	Describes the duration for which there may be no valid signal propagated
server-integrity-process-characteristic	String	RO	N	Describes the effect of any server integrity enhancement process on the characteristics of the Topological entity

latency-characteristic	List of {traffic-property-name, fixed-latency-characteristic, queing-latency-characteristic, jitter-characteristic, wander-characteristic} • “traffic-property-name”: “FIXED_LATENCY”, “fixed-latency-characteristic”: “0” Note: Always set to the above fixed values in CONC TAPI NBI	RO	N	Describes the effect on the latency of a queuing process Provided by tapi-server with default value. The attribute should be ignored by tapi-client
risk-characteristic	List of {risk-characteristic-name, List of {risk-identifier-list}} • “risk-characteristic-name”: “SRLG”, “risk-identifier-list”: “0” Note: Always set to the above fixed values in CONC TAPI NBI	RO	N	Specifies list of risk characteristics for consideration in an analysis of shared risk Provided by tapi-server with default value The attribute should be ignored by tapi-client
validation-mechanism	List of {validation-mechanism, layer-protocol-adjacency-validated, validation-robustness} • “validation-mechanism”: “ABC” Note: Always set to the above fixed values in CONC TAPI NBI	RO	N	Provides details of the specific validation mechanism(s) used to confirm the presence of the Link. Provided by tapi-server with default value The attribute should be ignored by tapi-client
transitioned-layer-protocol-name	List of {["DSR", “ETH”, "ODU", "PHOTONIC_MEDIA"]}	RO	N	Indicates pair of layer protocols transitioned across the Link. Applicable only for Transitional Links The attribute should be ignored by tapi-client in case of normal (non-transitional) Links Provided by tapi-server

T0 – Multi-layer topology

In T0 – Multi-layer topology model, the network abstraction collapses all network layers (DSR, ODU, PHOTONIC_MEDIA etc.) into a single Topology instance. CONC TAPI NBI supports T0 – Multi-layer topology.

Two types of topology configurations are foreseen:

- OLS-only topology (including ROADM and ILA nodes)
- TXP+OLS topology (including TXP/REGEN, ROADM and ILA nodes)

CONC TAPI NBI follows the Node disaggregation approach and strictly decouple the OLS domain from the TXP domain. CONC TAPI NBI also explicitly model the OTS and OMS photonic layers wherever applicable (instead of the single PHOTONIC_LAYER_QUALIFIER_UNSPECIFIED layer that collapses the OTS+OMS layers into a single layer).

When device has both ROADM and TXP/ODU-Switch configurations, CONC TAPI NBI disaggregates them into 2 logical Nodes – one for ROADM and one for TXP/ODU-Switch. The ROADM Node aggregates all the Add/Drop and Degree port models while the TXP/ODU-Switch Node aggregates all the Client and Line (Trunk) port models (across multiple cards) within the device.

CONC TAPI NBI supports the following types of Nodes:

Table 18 – Nodes supported by CONC TAPI NBI

TAPI Node	layer-protocol-name	NEP/CEP Day-0 Model	Mapped SIP Types	Description
ROADM	[“PHOTONIC_MEDIA”]	• Degree ports: – MC NEP – OMS CEP – OMS NEP – OTS CEP – OTS NEP • Add/Drop port – MC NEP – OMS CEP – OMS NEP	• Add/Drop port (except the ones connected to a Regen card) – MC NEP is mapped to MC SIP	The logical node representing ROADM functionalities present within a physical device in the OLS domain Logically groups all ROADM Line and Add/Drop ports present within the device
ILA	[“PHOTONIC_MEDIA”]	• Line ports: – OMS CEP – OMS NEP – OTS CEP – OTS NEP	-	The logical node representing ILA functionalities present within a physical Device in the OLS domain Logically groups all ILA Line ports present within the device

TXP/ ODUSwitch	[“PHOTONIC_MEDIA”, “ODU”, “DSR”]	• Line (Trunk) ports: – OTSi NEP – OMS CEP – OMS NEP • DSR Client ports – DSR NEP • OTU Client ports – ODU NEP	• Line (Trunk) port (except the ones in a Regen card) – OTSi NEP is mapped to OTSi SIP • DSR Client port – DSR NEP is mapped to DSR SIP • OTU Client port – ODU NEP is mapped to ODU SIP	The logical node representing TXP/ODU-Switch/Regen functionalities present within a physical device Logically groups all TXP Line (Trunk) and Client ports present within the device

CONC TAPI NBI supports the following types of Links:

Table 19 – Links supported by CONC TAPI NBI

TAPI Link	Description
OTS Link	It represents OTS layer adjacency between nodes within the OLS domain (between ROADM/ILA Nodes) Provides the essence of a Physical Fiber Span between nodes
OMS Link	It represents OMS layer adjacency between TAPI ROADM Nodes (OMS termination). OMS Link is modelled also between TXP Line (Trunk) port and ROADM Add/Drop port. <u>Note:</u> • The OMS Link currently modelled in CONC TAPI NBI has the same meaning of the MC Link mentioned in the TAPI standard. • The ILA Node has OMS layer modelled (NEP/CEP), however, the OMS Layer adjacency with other ROADM/ILA Nodes (via OMS Link) is not modelled.

The below figure shows the Day-0 Topology of a OLS Domain in CONC TAPI NBI.

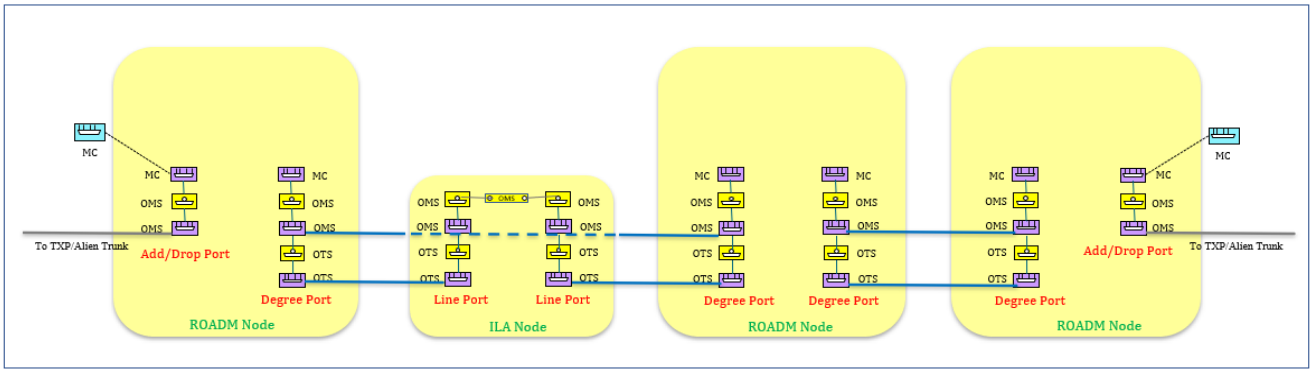

Figure 1 – OLS domain Day-0 Topology model

The below figure shows the Day-0 Topology of a TXP + OLS Domain in CONC TAPI NBI.

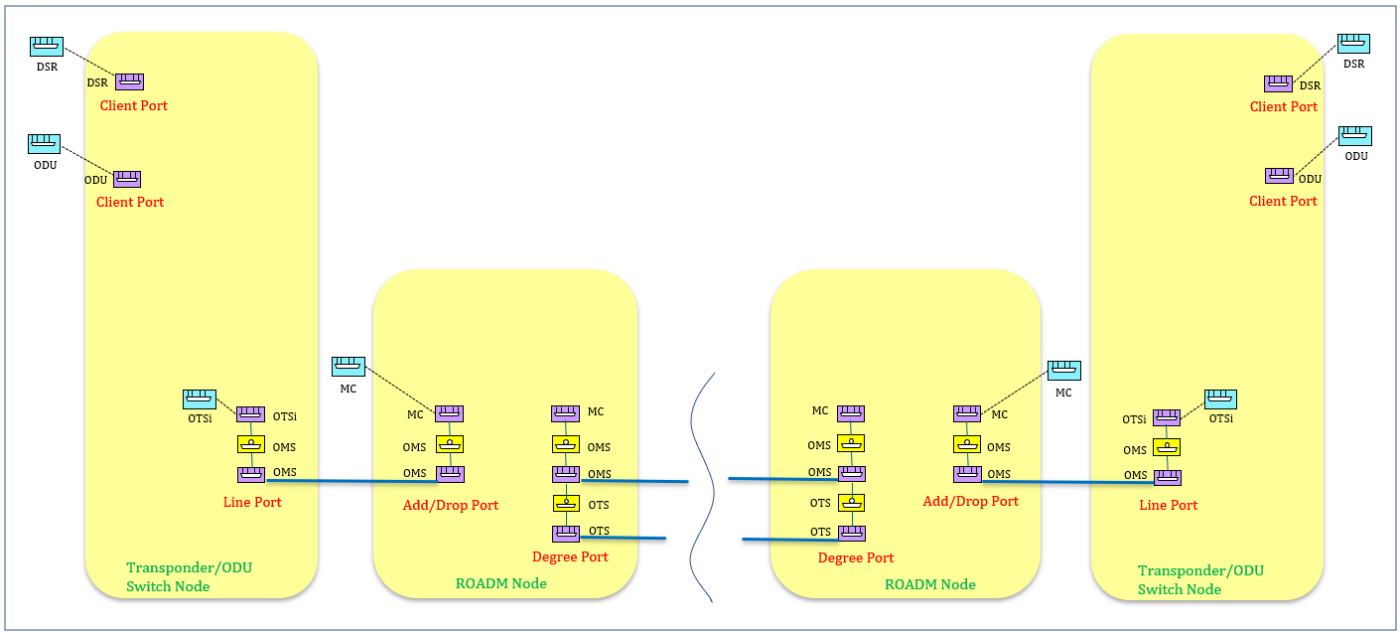

Figure 2 – TXP+OLS domain Day-0 Topology model

The below figure shows the Day-0 Topology of a TXP + OLS Domain (with Regen) in CONC TAPI NBI.

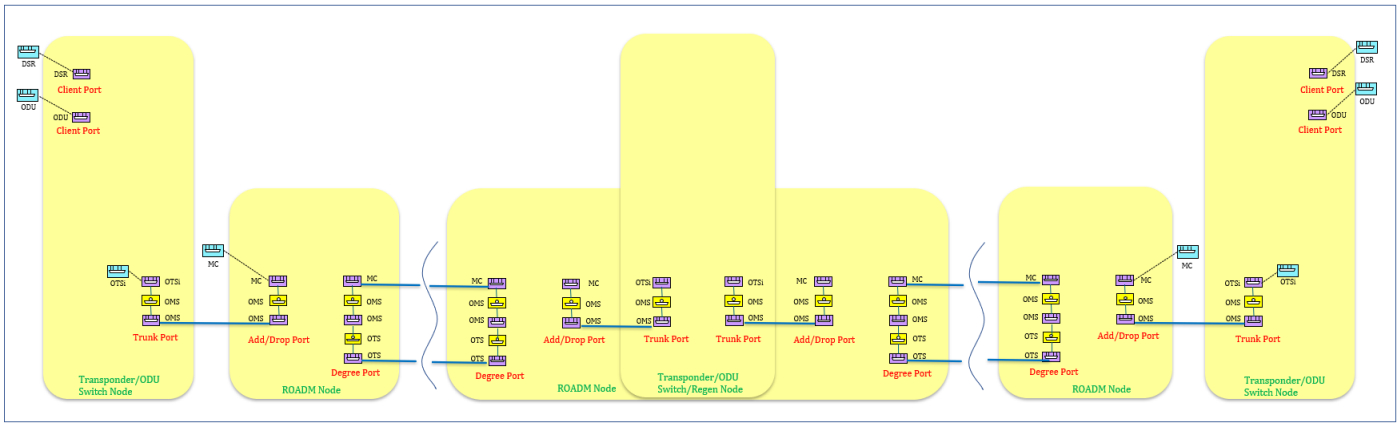

Figure 3 – TXP+OLS domain (with Regen) Day-0 Topology model

Whenever CONC TAPI NBI models OTS Link, CONC automatically starts power monitoring on the associated OTS CEPs. The monitoring is stopped whenever the OTS Link is deleted.

Optical Power Monitoring

CONC TAPI NBI supports Optical Power Monitoring for the following scenarios:

- Optical carrier-level (OTSiMC layer) power monitoring within ROADM node (Service level)
  - This power monitoring is available on the OTSiMC CEPs that are the endpoints of the OTSiMC (Cross) Connection between Add/Drop and Degree port within a ROADM node
  - The OTSiMC (Cross) Connection is part of OTSiMC (Top) Connection supporting OTSiMCA or DSR/OTU Client connectivity service. So, the measured power data on the OTSiMC CEPs along the route of the OTSiMC (Top) Connection can be used to troubleshoot the respective OTSiMCA or DSR/OTU Client connectivity service.
  - Whenever TAPI NBI provisions a connectivity-service, CONC automatically starts power monitoring on the associated OTSiMC CEPs (in case of DSR/OTU Client connectivity services, monitoring is started when the first service over the OTSiMC is provisioned). The monitoring is stopped as part of the connectivity-service deletion (in case of DSR/OTU Client connectivity services, monitoring is stopped only when the last service over the OTSiMC is deleted).

  See Table 14 – TAPI media-channel-connection-end-point-spec object definition for related model attributes.

- OTS layer power monitoring within ROADM/ILA node (Link level)
  - This power monitoring is available on the OTS CEPs that are the endpoints of the OTS Link between Degree/Line ports of ROADM/ILA nodes. In the ingress direction, the power is measured before the (pre-)amplification stage and in the egress direction, the power is measured after the (booster-)amplification stage. The measured power does not include power of the OSC.
  - The measured power data on the OTSi CEPs that are the endpoints of an OTS Link can be used to troubleshoot the respective Link.
  - Whenever TAPI NBI models OTS Link, CONC automatically starts power monitoring on the associated OTS CEPs. The monitoring is stopped whenever the OTS Link is deleted.

  See Table 15 – TAPI ots-connection-end-point-spec object definition for related model attributes.

CONC collects power data at 15min granularity (configurable).

TAPI Connectivity Context

The Connectivity Context represents the list of connectivity-services and connections within the TAPI Server. The TAPI Connectivity Context model is given in the table below.

Table 20 – TAPI connectivity-context object definition

Attribute	Allowed Values/Format	Mode	Support in CONC TAPI NBI	Notes
connectivity-service	List of {connectivity-service}	RW	Y	Provides list of connectivity services provisioned within the network Provided by tapi-client See Table 21 – TAPI connectivity-service object definition
connection	List of {connection}	RO	Y	Provides list of connections (Top and Lower connections) present within the network Provided by tapi-server See Table 25 – TAPI connection object definition

TAPI Connectivity Service

The TAPI connectivity-service represents an “intent-like” request for connectivity between two or more Service Interface Points (SIP). It is a container for connectivity request details and is distinct from the Connection(s) that realizes the request.

The TAPI Connectivity Service model is given in the table below.

Table 21 – TAPI connectivity-service object definition

Attribute	Allowed Values/Format	Mode	Support in CONC TAPI NBI	Notes

end-point	List of {connectivity-service-end-point}	RW	Y	Lists the CSEPs of the connectivity service. The CSEPs could be either the service endpoints or supporting the service endpoint with a specific role (e.g. server CSEP) Provided by tapi-client See Table 22 – TAPI connectivity-service-end-point object definition
connection	List of {connection-uuid}	RO	Y	References the Top Connections at every network layer traversed by the connectivity service Provided by tapi-server
uuid	"[0-9a-fA-F]{8}[0-9a-fA-F]{4}[0-9a-fA-F]{12}"	RW	Y	Indicates an identifier that is universally unique within an identifier space (as per RFC 4122) UUID for the connectivity service object Provided by tapi-client

name	List of {value-name, value} • “value-name”: “SERVICE_NAME”, “value”: “[0-9a-zA-Z_]{64}” • “value-name”: “ALLOW_AUTO_REGEN”, “value”: [“true”, “false”] • “value-name”: “OPTICAL_FEASIBILITY_THRESHOLD”, “value”: ["UNDEFINED", "GREEN", "YELLOW", "ORANGE", "RED"] • “value-name”: “IGNORE_PATH_ALARM”, “value”: [“true”, “false”]	RW	Y	Provides name-value pairs related to the connectivity service object SERVICE_NAME: Indicates the name assigned to the connectivity-service ALLOW_AUTO_REGEN: Indicates whether CONC is allowed to select a Regenerator during service path computation, if necessary (applicable only for DSR/OTU Client connectivity-services). This is optional parameter (default: “true”) OPTICAL_FEASIBILITY_THRESHOLD: Indicates the level of optical feasibility required while computing a service path. It ensures that for the selected path, the total OSNR computed at the receiver side minus "N" times sigma (OSNR standard deviation) is above the receiver threshold minus other impairment penalties. The value chosen for "N" depends on the threshold value selection. • UNDEFINED value indicates that optical feasibility shall not be verified while computing service path • GREEN value indicates that "N" is "3" (3 sigma - indicating 0.1% of being out of the threshold) • YELLOW value indicates that "N" is "2" (2 sigma - indicating 3.2% of being out of the threshold) • ORANGE value indicates that "N" is "1" (1 sigma - indicating 15.8% of being out of the threshold) • RED value indicates that "N" is "0" (3 sigma - indicating 49.9% of being out of the threshold) This is optional parameter (default: “GREEN”) IGNORE_PATH_ALARM: Indicates whether CONC should ignore any existing active

service-layer	["DSR", “ETH”, "ODU", "PHOTONIC_MEDIA"] Note: Only ["PHOTONIC_MEDIA", “ODU”, “DSR”] are supported in CONC TAPI NBI	RW	Y	Indicates the layer at which the connectivity service is requested • “DSR”: Non-OTN DSR Client service • “ETH”: ETH Client service • “ODU”: OTN Client service • “PHOTONIC_MEDIA”: OTSiMCA/MCA service This is a connectivity constraint Provided by tapi-client
service-type	[“POINT_TO_POINT_CONNECTIVITY”, “POINT_TO_MULTIPOINT_CONNECTIVITY”, “MULTIPOINT_CONNECTIVITY”, “ROOTED_MULTIPOINT_CONNECTIVITY”] Note: Only ["POINT_TO_POINT_CONNECTIVITY"] is supported in CONC TAPI NBI	RW	Y	Indicates the type of the connectivity service This is a connectivity constraint Provided by tapi-client
service-level	“[0-9a-zA-Z_]{64}”	RW	N	Indicates an abstract value the meaning of which is mutually agreed – typically represents metrics such as - Class of service, priority, resiliency, availability This is a connectivity constraint
requested-capacity	{"total-size": {value, unit}, bandwidth-profile} • "total-size": {value, unit} – "value": "[0-9]{8}", – "unit": ["TB", "TBPS", "GB", "GBPS", "MB", "MBPS", "KB", "KBPS", "GHz", "MHz"]	RW	N	Indicates the capacity requested for the connectivity service This is a connectivity constraint

connectivity-direction	["BIDIRECTIONAL", "UNIDIRECTIONAL", "UNDEFINED_OR_UNKNOWN"] Note: Only ["BIDIRECTIONAL"] is supported in CONC TAPI NBI	RW	Y	Indicates the direction of the connectivity service This is a connectivity constraint Provided by tapi-client
schedule	{end-time, start-time}	RW	N	Indicates the time range for this connectivity service This is a connectivity constraint
coroute-inclusion	{connectivity-service-uuid}	RW	N	References an already existing connectivity service whose route resources must be included in the new connectivity service. This is a connectivity constraint
diversity-exclusion	{connectivity-service-uuid}	RW	Y	References an already existing connectivity service whose route resources must be excluded in the new connectivity service. Level of diversity shall be indicated by diversity-policy attribute When diversity-constraint is used by particular connectivity service, the referenced connectivity service (i.e., whose uuid is referenced in the diversity-exclusion attribute) cannot be deleted unless the referencing connectivity service (i.e., the connectivity service which applied the diversity-constraint) is deleted. This is a connectivity constraint Provided by tapi-client
connection-exclusion	List of {uuid}	RW	N	References already existing connection(s) which needs to be excluded in the new connectivity service This is a connectivity constraint

connection-inclusion	List of {uuid}	RW	N	References already existing connection(s) which needs to be included in the new connectivity service This is a connectivity constraint
cost-characteristic	List of {cost-name, cost-value, cost-algorithm} • "cost-name": ["LENGTH", "OSNR"] Note: cost-value and cost-algorithm are not supported in CONC TAPI NBI	RW	Y	Indicates costs where each cost relates to some aspect of the topological entity. • cost-name="LENGTH": The total fiber/OTS-Link length of the connectivity service • cost-name="OSNR": The OSNR of the connectivity service CONC TAPI NBI supports only one type of cost-name at a time. This is a routing constraint Provided by tapi-client
latency-characteristic	List of {traffic-property-name, fixed-latency-characteristic, queing-latency-characteristic, jitter-characteristic, wander-characteristic}	RW	N	Indicates the latency characteristics for the connectivity service This is a routing constraint
risk-diversity-characteristic	List of {risk-characteristic-name, risk-identifier-list}	RW	N	Indicates risk characteristic where there is a list of risk identifiers related to that characteristic. This is a routing constraint
diversity-policy	["SRLG", "SRNG", "SNG", "NODE", "LINK"] Note: Only ["NODE", "LINK"] are supported in CONC TAPI NBI	RW	Y	Indicates the level of diversity applied when diversity-exclusion is requested This is a routing constraint Provided by tapi-client

route-objective-function	[“MIN_WORK_ROUTE_HOP”, “MIN_WORK_ROUTE_COST”, “MIN_WORK_ROUTE_LATENCY”, “MIN_SUM_OF_WORK_AND_PROTECTION_ROUTE_HOP”, “MIN_SUM_OF_WORK_AND_PROTECTION_ROUTE_COST”, “MIN_SUM_OF_WORK_AND_PROTECTION_ROUTE_LATENCY”, “LOAD_BALANCE_MAX_UNUSED_CAPACITY”] Note: Only [“MIN_WORK_ROUTE_HOP”, “MIN_WORK_ROUTE_COST”] are supported in CONC TAPI NBI	RW	Y	Indicates thee routing strategy for the connectivity service. The MIN_WORK_ROUTE_COST if specified is applied to the cost specified by cost-characteristics This is a routing constraint Provided by tapi-client
route-direction	[“BIDIRECTIONAL”, “UNIDIRECTIONAL”, “UNDEFINED_OR_UNKNOWN”] Note: Only [“BIDIRECTIONAL”] is supported in CONC TAPI NBI	RW	Y	Indicates the direction of the connectivity service route This is a routing constraint Provided by tapi-client
is-exclusive	[“true”, “false”]	RW	N	Indicates if the resources are to be exclusive to the connectivity service This is a routing constraint
max-allowed-cost	{value, priority} • “value”: “[0-9]{8}” Note: “priority” is not supported by CONC TAPI NBI	RW	Y	Indicates the constraint for the cost specified by cost-characteristic • For cost-name=LENGTH, it indicates the maximum allowed Fiber/OTS-Link length for the connectivity service. • For cost-name=OSNR, it indicates the minimum required OSNR for the connectivity service. This is a routing constraint Provided by tapi-client

max-allowed-hops	{value, priority} • “value”: “[0-9]{8}” Note: “priority” is not supported by CONC TAPI NBI	RW	Y	Indicates the maximum number of hops allowed for the connectivity service. This is a routing constraint Provided by tapi-client
max-allowed-delay	{value, priority} • “value”: “[0-9]{8}” Note: “priority” is not supported by CONC TAPI NBI	RW	N	Indicates the maximum delay allowed for the connectivity service. This is a routing constraint
include-topology	List of {uuid}	RW	N	References the topology instance to be included in the connectivity service This is a topology constraint
avoid-topology	List of {uuid}	RW	N	References the topology instance to be excluded from the connectivity service This is a topology constraint
include-path	List of {uuid}	RW	N	References the paths to be included in the connectivity service This is a topology constraint
exclude-path	List of {uuid}	RW	N	References the paths to be excluded from the connectivity service This is a topology constraint
include-link	List of {uuid}	RW	Y	References the Links to be included in the connectivity service. It could be unordered or partial list Only OTS Links can be referenced for inclusion This is a topology constraint Provided by tapi-client

exclude-link	List of {uuid}	RW	Y	References the Links to be excluded from the connectivity service. It could be unordered or partial list Only OTS Links can be referenced for exclusion This is a topology constraint Provided by tapi-client
include-node	List of {uuid}	RW	Y	References the Nodes to be included in the connectivity service. It could be unordered or partial list This is a topology constraint Provided by tapi-client
exclude-node	List of {uuid}	RW	Y	References the Nodes to be excluded from the connectivity service. It could be unordered or partial list This is a topology constraint Provided by tapi-client
preferred-transport-layer	["DSR", “ETH”, "ODU", "PHOTONIC_MEDIA"] Note: Only ["PHOTONIC_MEDIA"] is supported in CONC TAPI NBI	RW	Y	Indicates the layer(s) of transport connection that is preferred to carry the service. This could be same as the service layer or one of the supported server layers. This is a topology constraint Provided by tapi-client

resilience-type	{restoration-policy, protection-type} • “restoration-policy”: [“PER_DOMAIN_RESTORATION”, “END_TO_END_RESTORATION”, “NA”] • “protection-type”: [“NO_PROTECTON”, “ONE_PLUS_ONE_PROTECTION”, “ONE_PLUS_ONE_PROTECTION_WITH_DYNAMIC_RESTORATION”, “PERMA-NENT_ONE_PLUS_ONE_PROTECTION”, “ONE_FOR_ONE_PROTECTION”, “DYNAM-IC_RESTORATION”, “PRE_COMPUTED_RESTORATION”, “ONE_PLUS_ONE_PROTECTION_WITH_PRE_COMPUTED_RESTORATION”] <u>Note</u>: Only restoration-policy [“NA”] and protection-type [“NO_PROTECTON”] are supported in CONC TAPI NBI	RW	Y	Indicates the type of resiliency (protection/restoration) required for the connectivity service This is a resilience constraint Provided by tapi-client
restoration-coordinate-type	[“NO_COORDINATE”, “HOLD_OFF_TIME”, “WAIT_FOR_NOTIFICATION”]	RW	N	Indicates the restoration coordination mechanism between multi-layers This is a resilience constraint
restore-priority	"[0-9]+"	RW	N	Indicates the restoration priority for the connectivity service This is a resilience constraint
reversion-mode	["REVERTIVE", "NON-REVERTIVE"]	RW	N	Indicates whether the protection scheme is revertive or non-revertive This is a resilience constraint

wait-to-revert-time	"[0-9]{4}"	RW	N	Specifies the time, in minutes, to wait after a fault clears on a higher priority (preferred) resource before reverting to the preferred resource when the protection system is revertive This is a resilience constraint
hold-off-time	"[0-9]{4}"	RW	N	Indicates the time, in milliseconds, between declaration of signal degrade or signal fail, and the initialization of the protection switching algorithm This is a resilience constraint
is-lock-out	[“true”, “false”]	RW	N	Indicates that the resource is configured to temporarily not be available for use in the protection scheme(s) it is part of. This is a resilience constraint
is-frozen	[“true”, “false”]	RW	N	Indicates that the current switch state is temporarily frozen and prevents any switch action to be taken This is a resilience constraint
is-coordinated-switching-both-ends	[“true”, “false”]	RW	N	Indicates whether switching at both ends of each flow across the FC is coordinated at both ingress and egress ends This is a resilience constraint
max-switch-times	"[0-9]{2}"	RW	N	Indicates the maximum number of protection switches allowed. This is a resilience constraint
preferred-restoration-layer	["DSR", “ETH”, "ODU", "PHOTONIC_MEDIA"]	RW	N	Indicates the layer at which the resilience parameters are configured for. This is a resilience constraint

administrative-state	["UNLOCKED", "LOCKED"]	RW	Y	Indicates if the connectivity service is administratively locked from using it or not Provided by tapi-client
operational-state	["ENABLED", "DISABLED"]	RO	Y	Indicates if the connectivity service is operable or not Provided by tapi-server
lifecycle-state	["PLANNED", "POTENTIAL_AVAILABLE", "POTENTIAL_BUSY", "INSTALLED", "PENDING_REMOVAL"] Note: Only [“PLANNED”, "INSTALLED", "PENDING_REMOVAL"] is supported in CONC TAPI NBI	RO	Y	Indicates the state of the connectivity service in the network • PLANNED: The resource is planned but is not present in the network • POTENTIAL_AVAILABLE: The supporting resources are present in the network and is shared or requires further configuration before use • POTENTIAL_BUSY: The supporting resources are present in the network and is busy or requires further configuration before use • INSTALLED: The resource is present in the network and is capable of providing the service • PENDING_REMOVAL: The resource is marked for removal Provided by tapi-server

CONC TAPI NBI supports provisioning of the following type of connectivity-services:

- OTSiMCA connectivity service (supporting Alien transport).
- DSR/OTU client connectivity service (with native TXP)

TAPI Connectivity Service End Point

The connectivity-service-end-point (CSEP) represents the endpoint of a connectivity-service and is logically attached to the SIP providing the connectivity service. The CSEP references the CEPs that are part of the Connections supporting the connectivity service.

The model of the connectivity-service-end-point object is given in the below table.

Table 22 – TAPI connectivity-service-end-point object definition

Attribute	Allowed Values/Format	Mode	Support in CONC TAPI NBI	Notes
layer-protocol-name	["DSR", “ETH”, "ODU", "PHOTONIC_MEDIA"] Note: Only ["PHOTONIC_MEDIA", “ODU”, “DSR”] is supported in CONC TAPI NBI	RW	Y	Indicates the protocol/technology layer supported by the CSEP Provided by tapi-client
layer-protocol-qualifier	“DIGITAL_SIGNAL_TYPE_" [“GigE”, ”10_GigE_LAN”, ”10_GigE_WAN”, ”40_GigE”, ”100_GigE”, ”FC_100”, ”FC_200”, ”FC_400”, ”FC_800”, ”FC_1200”, ”FC_1600”, ”FC_3200”, ”STM_1”, ”STM_4”, ”STM_16”, ”STM_64”, ”STM_256”, ”OC_3”, ”OC_12”, ”OC_48”, ”OC_192”, ”OC_768”, ”OTU_1”, ”OTU_2”, ”OTU_2E”, ”OTU_3”, ”OTU_4”, ”GPON”, ”XGPON”, ”IB_SDR”, ”IB_DDR”, ”IB_QDR”, ”SBCON_ESCON”, ”DVB_ASI”, ”SDI”, ”SDI_1G5”, ”SDI_3G”] "ODU_TYPE_": [“ODU0”, “ODU1”, ”ODU2”, ”ODU2E”, ”ODU3”, ”ODU4”, ”ODU_FLEX”, ”ODU_CN”] "PHOTONIC_LAYER_QUALIFIER_": [”OTSi”, ”OTSiA”, ”OTSiG”, ”NMC”, ”NMCA”, ”SMC”, ”SMCA”, ”OCH”, ”OMS”, ”OTS”, ”OTSiMC”, ”OTSiMCA”, ”MC”, ”MCA”]	RW	Y	Indicates the sublayers within the protocol layer Provided by tapi-client
service-interface-point	{service-interface-point-uuid}	RW	Y	References the SIP associated with the CSEP. Provided by tapi-client
connection-end-point	{topology-uuid, node-uuid, node-edge-point-uuid, connection-end-point-uuid}	RO	Y	References the CEP that is present on the NEP mapped to the CSEP’s SIP. The referenced CEP acts as the endpoint of the Top-Connection supporting the connectivity service at the layer of the CSEP. Provided by tapi-server

capacity	{"total-size": {value, unit}, band-width-profile} • "total-size": {value, unit} – "value": "[0-9]{8}", – "unit": ["TB", "TBPS", "GB", "GBPS", "MB", "MBPS", "KB", "KBPS", "GHz", "MHz"]	RW	N	Indicates the capacity/bandwidth requested for the CSEP
direction	[“BIDIRECTIONAL”, "INPUT", “OUTPUT”, “UNIDENTIFIED_OR_UNKNOWN”] Note: Only [“BIDIRECTIONAL”] is supported in CONC TAPI NBI	RW	Y	Indicates if the CEP has only INPUT flow or OUTPUT flow or both Provided by tapi-client
role	[“SYMMETRIC”, “ROOT”, “LEAF”, “TRUNK”, “UNKNOWN”]	RW	Y	The role of the CSEP as the endpoint of the connectivity service. Provided by tapi-client
protection-role	["WORK", "PROTECT", "PROTECTED", "NA", "WORK_RESTORE", "PROTECT_RESTORE"] Note: Only [“NA”] is supported in CONC TAPI NBI	RW	Y	Indicates the protection role of the CSEP Provided by tapi-client
peer-fwd-connectivity-service-end-point	{connectivity-service-uuid, connectivity-service-end-point-local-id}	RW	N	References the peer CSEP where the traffic from the given CSEP is forwarded to
protecting-connectivity-service-end-point	{connectivity-service-uuid, connectivity-service-end-point-local-id}	RW	N	References the CSEP that is protecting the given CSEP
server-connectivity-service-end-point	{connectivity-service-uuid, connectivity-service-end-point-local-id}	RW	Y	References the CSEP that is acting as server to the given CSEP. Provided by tapi-client
local-id	"[0-9a-zA-Z_]{32}"	RW	Y	Indicates an identifier that is unique within the list of CSEPs Provided by tapi-client

name	List of {value-name, value} • “value-name”: “CONN_SERVICE_END_POINT_NAME”, “value”: “[0-9a-zA-Z_]{64}”	RW	Y	Provides name-value pairs related to the CSEP object Provided by tapi-client
administrative-state	["UNLOCKED", "LOCKED"]	RW	Y	Indicates if the CSEP is administratively locked from using it or not Provided by tapi-client
operational-state	["ENABLED", "DISABLED"]	RO	Y	Indicates if the CSEP is operable or not Provided by tapi-server
lifecycle-state	["PLANNED", "POTENTIAL_AVAILABLE", "POTENTIAL_BUSY", "INSTALLED", "PENDING_REMOVAL"] Note: Only ["INSTALLED"] is supported in CONC TAPI NBI	RO	Y	Indicates the state of the CSEP in the network • PLANNED: The resource is planned but is not present in the network • POTENTIAL_AVAILABLE: The supporting resources are present in the network and is shared or requires further configuration before use • POTENTIAL_BUSY: The supporting resources are present in the network and is busy or requires further configuration before use • INSTALLED: The resource is present in the network and is capable of providing the service • PENDING_REMOVAL: The resource is marked for removal Provided by tapi-server

otsi-connectivity-service-end-point-spec	{otsi-connectivity-service-end-point-spec}	RW	N	Augments the CSEP with OTSi layer-specific information. This is deprecated and not used.
media-channel-connectivity-service-end-point-spec	{media-channel-connectivity-service-end-point-spec}	RW	N	Augments the CSEP with MC layer-specific information. This is deprecated and not used.
otsia-connectivity-service-end-point-spec	{otsia-connectivity-service-end-point-spec}	RW	Y	Augments the CSEP with OTSi/OTSiA layer-specific information. Applicable to CSEP at the PHOTONIC_MEDIA layer with OTSi/OTSiA layer-protocol-qualifier. Applicable also to CSEP at the PHOTONIC_MEDIA layer with OTSiMC layer-protocol-qualifier for supporting Alien transport (proprietary extension). Provided by tapi-client See Table 23 – TAPI otsia-connectivity-service-end-point-spec object definition

mca-connectivity-service-end-point-spec	{mca-connectivity-service-end-point-spec}	RW	Y	Augments the CSEP with OTSiMC/OTSiMCA or MC/MCA layer-specific information. Applicable to CSEP at the PHOTONIC_MEDIA layer with OTSiMC/OTSiMCA or MC/MCA layer-protocol-qualifier. Provided by tapi-client See Table 24 – TAPI mca-connectivity-service-end-point-spec object definition
odu-connectivity-service-end-point-spec	{odu-connectivity-service-end-point-spec}	RW	N	Augments the CSEP with ODU layer-specific information. Applicable to CSEP at the ODU layer with ODU layer-protocol-qualifier.

The model of otsia-connectivity-service-end-point-spec is given in the table below.

Table 23 – TAPI otsia-connectivity-service-end-point-spec object definition

Attribute	Allowed Values/Format	Mode	Support in CONC TAPI NBI	Notes
List of {otsi-config}:	List of {“otsi-config”: {central-frequency, spectrum, application-identifier, modulation, laser-control, transmit-power, total-power-warn-threshold-upper, total-power-warn-threshold-lower, local-id, name}}	RW	Y	Specifies configuration for each OTSi within the OTSiA Provided by tapi-client

otsi-config: central-frequency	{“frequency-constraint”: {adjustment-granularity, grid-type}, central-frequency} • "frequency-constraint": – “adjustment-granularity”: ["G_100GHZ", "G_50GHZ", "G_25GHZ", "G_12_5GHZ", "G_6_25GHZ", "G_3_125GHZ", "UNCON-STRAINED"] – “grid-type”: [“DWDM“,“CWDM“,“FLEX“, “GRIDLESS”, “UNSPECIFIED”] • “central-frequency”: “[0-9]{9}” <u>Note</u>: “frequency-constraint” is not supported in CONC TAPI NBI	RW	Y	Specifies the central frequency of the OTSi carrier (i.e., the carrier signal that is generated at the TXP/Alien and transported over the OLS domain as an OTSiMC signal within an MC) in MHz, adjustment-granularity in GHz and grid-type. In case the attribute is not provided by client, tapi-server provides this information based on the actual frequency allocated. Provided by tapi-client/tapi-server
otsi-config: spectrum	{upper-frequency, lower-frequency, “frequency-constraint”: {adjustment-granularity, grid-type}} • “upper-frequency”: “[0-9]{9}” • “lower-frequency”: “[0-9]{9}” • "frequency-constraint": – “adjustment-granularity”: ["G_100GHZ", "G_50GHZ", "G_25GHZ", "G_12_5GHZ", "G_6_25GHZ", "G_3_125GHZ", "UNCON-STRAINED"] – “grid-type”: [“DWDM“,“CWDM“,“FLEX“, “GRIDLESS”, “UNSPECIFIED”]	RW	N	Specifies the upper/ lower frequency bound of the OTSi spectrum specified in MHz, adjustment-granularity in GHz and grid-type

otsi-config: application-identifier	{application-identifier-type, application-code} • “application-identifier-type”: [”PROPRIETARY”, ”ITUT_G959_1”, ”ITUT_G698_1”, ”ITUT_G698_2”, ”ITUT_G696_1”, ”ITUT_G695”] • “application-code”: "[0-9a-zA-Z_]{64}" Note: Only application-identifier-type [“PROPRIETARY”] is supported in CONC TAPI NBI	RW	Y	Specifies selected application identifier for the OTSi signal. • If the application-identifier-type is STANDARD, the value of application-code represents a standard application code as defined in the ITU-T Recommendations. • If the application-identifier-type is PROPRIETARY, the first six characters of the application-code contain the Hexadecimal representation of an OUI assigned to the vendor whose implementation generated the Application Identifier. Provided by tapi-client See Table 27 – OTSi Application Codes supported within CONC TAPI NBI
otsi-config: modulation	["RZ", "NRZ", "BPSK", "DPSK", "QPSK", "8QAM", "16QAM", "PAM4", "PAM8", "UNDEFINED"]	RW	N	Defines the modulation technique selected at the OTSi carrier source.
otsi-config: laser-control	["FORCED-ON", "FORCED-OFF", "AUTOMATIC-LASER-SHUTDOWN", "UNDEFINED"]	RW	N	Indicates the type of laser control

otsi-config: transmit-power	{total-power, power-spectral-density} • "total-power": "[0-9].[0-9]{7}" • "power-spectral-density": "[0-9].[0-9]{7}" Note: Only "total-power" is supported in CONC TAPI NBI	RW	Y	Indicates the transmit power in dBm required at the OTSi carrier source. Provided by tapi-server in case of OTSiMCA connectivity service for supporting Alien transport as calculated by it. Configuration from tapi-client is not supported.
otsi-config: total-power-warn-threshold-upper	"[0-9].[0-9]{7}"	RW	N	Indicates the upper power threshold for the OTSi carrier
otsi-config: total-power-warn-threshold-lower	"[0-9].[0-9]{7}"	RW	N	Indicates the lower power threshold for the OTSi carrier
otsi-config: local-id	"[0-9a-zA-Z_]{32}"	RW	Y	Indicates an identifier that is unique within the list of otsi-config Provided by tapi-client
otsi-config: name	List of {value-name, value} • "value-name": String, "value": "[0-9a-zA-Z_]{64}"	RW	N	Provides name-value pairs related to the otsi-config object
number-of-otsi	"[0-9]{9}" Note: Only the value "1" is supported in CONC TAPI NBI	RW	Y	Specifies the number of OTSi carriers within the OTSiA Provided by tapi-client

The model of mca-connectivity-service-end-point-spec object is given in the below table.

Table 24 – TAPI mca-connectivity-service-end-point-spec object definition

Attribute	Allowed Values/Format	Mode	Support in CONC TAPI NBI	Notes

List of {mc-config}:	List of {“mc-config”: {spectrum, power-management-config-pac, local-id, name}}	RW	Y	Specifies configuration for each OTSiMC with the OTSiMCA or for each MC within the MCA Provided by tapi-client
mc-config: spectrum	{upper-frequency, lower-frequency, “frequency-constraint”: {adjustment-granularity, grid-type}} • “upper-frequency”: “[0-9]{9}” • “lower-frequency”: “[0-9]{9}” • "frequency-constraint": – “adjustment-granularity”: ["G_100GHZ", "G_50GHZ", "G_25GHZ", "G_12_5GHZ", "G_6_25GHZ", "G_3_125GHZ", "UNCON-STRAINED"] – “grid-type”: [“DWDM“,“CWDM“,“FLEX“, “GRIDLESS”, “UNSPECIFIED”]	RW	N	Specifies the upper/lower frequency bound of the media channel (OTSiMC or MC) spectrum specified in MHz, adjustment-granularity in GHz and grid-type
mc-config: power-management-config-pac	{intended-maximum-output-power, intended-minimum-output-power, expected-maximum-input-power, expected-minimum-input-power} • intended-maximum-output-power – “total-power”: “[0-9].[0-9]{7}” – “power-spectral-density”: “[0-9].[0-9]{7}” • intended-minimum-output-power – “total-power”: “[0-9].[0-9]{7}” – “power-spectral-density”: “[0-9].[0-9]{7}” • expected-maximum-input-power – “total-power”: “[0-9].[0-9]{7}” – “power-spectral-density”: “[0-9].[0-9]{7}” • expected-minimum-input-power – “total-power”: “[0-9].[0-9]{7}” – “power-spectral-density”: “[0-9].[0-9]{7}”	RW	N	Specifies the total power (in dBm) and distribution of power over the frequency (in nW/MHz) for the intended/expected max/min output/input power.
mc-config: local-id	"[0-9a-zA-Z_]{32}"	RW	Y	Indicates an identifier that is unique within the list of mc-config Provided by tapi-client

mc-config: name	List of {value-name, value} For OTSiMC: • "value-name": "CSEP_OTSI_MC_NAME", "value": "[0-9a-zA-Z_]{64}" For MC: • "value-name": "CSEP_MC_NAME", "value": "[0-9a-zA-Z_]{64}"	RW	Y	Provides name-value pairs related to the mc-config object Provided by tapi-client
number-of-mc	"[0-9]{9}" Note: Only the value "1" is supported in CONC TAPI NBI.	RW	Y	Specifies the number of OTSiMC within the OTSiMCA or number of MC within the MCA Provided by tapi-client
capacity	{value, unit} • "value": "[0-9]{8}", • "unit": ["TB", "TBPS", "GB", "GBPS", "MB", "MBPS", "KB", "KBPS", "GHz", "MHz"]	RW	N	Specifies the total capacity of an OTSiMCA/MCA

TAPI Connection

Connection represents an enabled (provisioned) potential for forwarding between two or more Node-Edge-Points from the Node aspect of the Forwarding-Domain. It is a container for provisioned connectivity that tracks the state of the allocated resources and is distinct from the connectivity Service request.

TAPI distinguishes two different types of connections:

- Cross-connections (XC)
  - Cross-connection is defined as a connection between Connection-End-Points of the same layer within a Forwarding-Domain (represented as a TAPI node object)
- Top Connections
  - Top Connection is defined as the end-to-end connection between Connection-End-Points within the same layer which may span multiple Forwarding-Domains.
  - Top connection is composed by zero or more XCs which belong to the same layer of the Top Connection

A Connection can be recursively decomposed into multiple lower-level connections in the same layer. The lower-connection attribute is used to represent the partitioning of the Top Connection at the same layer and does not introduce any layering relationship. The TAPI Connection model is given in the table below.

Table 25 – TAPI connection object definition

Attribute	Allowed Values/Format	Mode	Support in CONC TAPI NBI	Notes
connection-end-point	List of {topology-uuid, node-uuid, node-edge-point-uuid, connection-end-point-uuid}	RO	Y	References the CEPs that are the endpoints of the connection object Provided by tapi-server
lower-connection	List of {connection-uuid}	RO	Y	References the underlying connection objects that partitions the given connection object. • If the connection object represents a Top-Connection, every connection object representing the cross-connection supporting the top connection (at the same layer) is referenced as it's lower connection. In case the Top Connection does not have any cross-connections (e.g. if the Top Connection represents an Infrastructure Trail as defined in ITU-T G.805 with no switching/cross-connect in between), the lower-connection list shall be empty • If the connection object represents a Cross-Connection, the lower-connection list shall be empty. Provided by tapi-server

supported-client-link	List of {topology-uuid, link-uuid}	RO	N	References the link object generated to represent the adjacency between pair of client-layer NEPs as a result of the top connection object between CEPs at a given layer being operational.
route	List of {route}	RO	Y	Represents the route of a connection through the topology representation. One connection may have one or more route depending upon the number of paths available (e.g., in case of protection, more than one paths/route is available to the Connection). Provided by tapi-server See Table 26 – TAPI route object definition
switch-control	List of {switch-control}	RO	N	Indicates the protection switch status and control
direction	["BIDIRECTIONAL", "UNIDIRECTIONAL", "UNDEFINED_OR_UNKNOWN"] Note: Only ["BIDIRECTIONAL"] is supported in CONC TAPI NBI	RO	Y	Indicates the directionality of the Connection Provided by tapi-server
layer-protocol-name	["DSR", “ETH”, "ODU", "PHOTONIC_MEDIA"] Note: Only ["PHOTONIC_MEDIA", “ODU”, “DSR”] is supported in CONC TAPI NBI	RO	Y	Indicates the protocol/technology layer applicable to the Connection Provided by tapi-server
connection-spec-reference	{connection-spec-id, connection-spec-name}	RO	N	Provides the reference to the spec that defines the connection type and cep roles

uuid	“[0-9a-fA-F]{8}[0-9a-fA-F]{4}[0-9a-fA-F]{12}”	RO	Y	Indicates an identifier that is universally unique within an identifier space (as per RFC 4122) UUID for the connection object Provided by tapi-server
name	List of {value-name, value} • “value-name”: “CONNECTION_NAME”, “value”: “[0-9a-zA-Z_]{64}”	RO	Y	Provides name-value pairs related to the connection object Provided by tapi-server
operational-state	["ENABLED", "DISABLED"]	RO	Y	Indicates if the connection is operable or not Provided by tapi-server
lifecycle-state	["PLANNED", "POTENTIAL_AVAILABLE", "POTENTIAL_BUSY", "INSTALLED", "PENDING_REMOVAL"] Note: Only ["PLANNED", "INSTALLED", "PENDING_REMOVAL"] are supported in CONC TAPI NBI	RO	Y	Indicates the state of the connection object in the network • PLANNED: The resource is planned but is not present in the network • POTENTIAL_AVAILABLE: The supporting resources are present in the network and is shared or requires further configuration before use • POTENTIAL_BUSY: The supporting resources are present in the network and is busy or requires further configuration before use • INSTALLED: The resource is present in the network and is capable of providing the service • PENDING_REMOVAL: The resource is marked for removal Provided by tapi-server

The Route represents the route of a connection through the topology representation. It is described by the list of CEPs at the same layer of the connection that are traversed by the Connection.

The model of route object is given in the below table.

Table 26 – TAPI route object definition

Attribute	Allowed Values/Format	Mode	Support in CONC TAPI NBI	Notes
connection-end-point	List of {topology-uuid, node-uuid, node-edge-point-uuid, connection-end-point-uuid}	RO	Y	References the CEPs (at the same layer as that of the connection) that are traversed by the connection. It includes the CEPs at the connection endpoints and the CEPs at each cross-connection referenced within the connection's lower-connection list. CONC TAPI NBI does not maintain the logical order of the CEPs. Provided by tapi-server
resilience-route-pac:	{priority, route-state, local-id, name}	RO	N	Provides resilience and state attributes to the Route. If this object is not present, it indicates that the route is intended as the current route of the connection.
resilience-route-pac: priority	"[0-9]+"	RO	N	Indicates the priority of the route for the connection
resilience-route-pac: route-state	["ROUTE_STATE_CURRENT", "ROUTE_STATE_NOT_CURRENT", "ROUTE_STATE_UNKNOWN"]	RO	N	Indicates the current route selection
resilience-route-pac: local-id	"[0-9a-zA-Z_]{32}"	RO	N	Indicates an identifier for resilience-route object
resilience-route-pac: name	List of {value-name, value} • "value-name": String, "value": "[0-9a-zA-Z_]{64}"	RO	N	Provides name-value pairs related to the resilience-route object

local-id	"[0-9a-zA-Z_]{32}"	RO	Y	Indicates an identifier that is unique within the list of routes Provided by tapi-server
name	List of {value-name, value} • “value-name”: “ROUTE_NAME”, “value”: “[0-9a-zA-Z_]{64}”	RO	Y	Provides name-value pairs related to the route object Provided by tapi-server

OTSi Application Identifier

TAPI supports application-identifier attribute which defines the characteristics of the OTSi carrier signal in a specific standard/format. It encodes basic OTSi signal information such as FEC mode, port rate, modulation format and baud rate in a pre-defined format which can be used by the OLS domain to support transport of the OTSi carrier signal. In a disaggregated optical network, the application-identifier can be used to support transport of Alien wavelength.

The application-identifier contains application-identifier-type and application-code as its attributes. For further details, see Table 23 – TAPI otsia-connectivity-service-end-point-spec object definition.

CONC TAPI NBI supports application-identifier as given below:

- application-identifier-type: “PROPRIETARY”
- application-code: Supports 2 formats as given below:
  1. 00B08E#<PID>#1#<OC_ID>
     - “00B08E”: Cisco OUI (Organizationally Unique Identifier)
     - “<PID>”: Product ID of the OTSi carrier source
     - “1”: Indicates Format: 1
     - “<OC_ID>”: Operational Mode
  2. 00B08E#<PID>#2#<FECMode>#<PortRate>#<ModulationFormat>#<BaudRate>
     - “00B08E”: Cisco OUI (Organizationally Unique Identifier)
     - “<PID>”: Product ID of the OTSi carrier source
     - “2”: Indicates Format: 2
     - “FECMode”: FEC Mode
     - “PortRate”: Bit Rate
     - “ModulationFormat”: Modulation Format of the OTSi signal
     - “BaudRate”: Baud Rate of the OTSi signal

Table 27 – OTSi Application Codes supported within CONC TAPI NBI

PID	TAPI application-code (Format: 1)	TAPI application-code (Format: 2)	Characteristics
QDD-400G-ZRP-S	00B08E#QDD-400G-ZRP-S#1#5013	00B08E#QDD-400G-ZRP-S#2#OFEC-15-DE-ON#R100G#DP-QPSK#30.1	• OC_ID: 5013 • FECMode: OFEC-15-DE-ON • PortRate: R100G • ModulationFormat: DP-QPSK • BaudRate: 30.1
	00B08E#QDD-400G-ZRP-S#1#5009	00B08E#QDD-400G-ZRP-S#2#OFEC-15-DE-ON#R200G#DP-QPSK#60.1	• OC_ID: 5009 • FECMode: OFEC-15-DE-ON • PortRate: R200G • ModulationFormat: DP-QPSK • BaudRate: 60.1
	00B08E#QDD-400G-ZRP-S#1#5011	00B08E#QDD-400G-ZRP-S#2#OFEC-15-DE-ON#R200G#DP-8QAM#40.1	• OC_ID: 5011 • FECMode: OFEC-15-DE-ON • PortRate: R200G • ModulationFormat: DP-8QAM • BaudRate: 40.1
	00B08E#QDD-400G-ZRP-S#1#5012	00B08E#QDD-400G-ZRP-S#2#OFEC-15-DE-ON#R200G#DP-16QAM#30.1	• OC_ID: 5012 • FECMode: OFEC-15-DE-ON • PortRate: R200G • ModulationFormat: DP-16QAM • BaudRate: 30.1
	00B08E#QDD-400G-ZRP-S#1#5007	00B08E#QDD-400G-ZRP-S#2#OFEC-15-DE-ON#R300G#DP-8QAM#60.1	• OC_ID: 5007 • FECMode: OFEC-15-DE-ON • PortRate: R300G • ModulationFormat: DP-8QAM • BaudRate: 60.1
	00B08E#QDD-400G-ZRP-S#1#5005	00B08E#QDD-400G-ZRP-S#2#OFEC-15-DE-ON#R400G#DP-16QAM#60.1	• OC_ID: 5005 • FECMode: OFEC-15-DE-ON • PortRate: R400G • ModulationFormat: DP-16QAM • BaudRate: 60.1
	00B08E#QDD-400G-ZRP-S#1#5004	00B08E#QDD-400G-ZRP-S#2#CFEC-15-DE-ON#R400G#DP-16QAM#59.8	• OC_ID: 5004 • FECMode: CFEC-15-DE-ON • PortRate: R400G • ModulationFormat: DP-16QAM • BaudRate: 59.8
QDD-400G-ZR-S	00B08E#QDD-400G-ZR-S#1#5003	00B08E#QDD-400G-ZR-S#2#CFEC-15-DE-ON#R400G#DP-16QAM#59.8	• OC_ID: 5003 • FECMode: CFEC-15-DE-ON • PortRate: R400G • ModulationFormat: DP-16QAM • BaudRate: 59.8
ONS-CFP2D-400G-C	00B08E#ONS-CFP2D-400G-C#1#5000	00B08E#ONS-CFP2D-400G-C#2#OFEC-15-DE-ON#R400G#DP-16QAM#63.1	• OC_ID: 5000 • FECMode: OFEC-15-DE-ON • PortRate: R400G • ModulationFormat: DP-16QAM • BaudRate: 63.1

	00B08E#ONS-CFP2D-400G-C#1#5001	00B08E#ONS-CFP2D-400G-C#2#OFEC-15-DE-ON#R300G#DP-8QAM#63.1	• OC_ID: 5001 • FECMode: OFEC-15-DE-ON • PortRate: R300G • ModulationFormat: DP-8QAM • BaudRate: 63.1
	00B08E#ONS-CFP2D-400G-C#1#5002	00B08E#ONS-CFP2D-400G-C#2#OFEC-15-DE-ON#R200G#DP-QPSK#63.1	• OC_ID: 5002 • FECMode: OFEC-15-DE-ON • PortRate: R200G • ModulationFormat: DP-QPSK • BaudRate: 63.1
NCS1K4-1.2T-K9	00B08E#NCS1K4-1.2T-K9#1#1955	00B08E#NCS1K4-1.2T-K9#2#SD-FEC-27-DE-OFF#R200G#QPSK#69.4	• OC_ID: 1955 • FECMode: SD-FEC-27-DE-OFF • PortRate: R200G • ModulationFormat: QPSK • BaudRate: 69.4
	00B08E#NCS1K4-1.2T-K9#1#1598	00B08E#NCS1K4-1.2T-K9#2#SD-FEC-27-DE-OFF#R300G#SP-16QAM-16QAM#60.6	• OC_ID: 1598 • FECMode: SD-FEC-27-DE-OFF • PortRate: R300G • ModulationFormat: SP-16QAM-16QAM • BaudRate: 60.6
	00B08E#NCS1K4-1.2T-K9#1#1955	00B08E#NCS1K4-1.2T-K9#2#SD-FEC-27-DE-OFF#R300G#SP-16QAM#69.4	• OC_ID: 1955 • FECMode: SD-FEC-27-DE-OFF • PortRate: R300G • ModulationFormat: SP-16QAM • BaudRate: 69.4
	00B08E#NCS1K4-1.2T-K9#1#1955	00B08E#NCS1K4-1.2T-K9#2#SD-FEC-27-DE-OFF#R400G#16QAM#69.4	• OC_ID: 1955 • FECMode: SD-FEC-27-DE-OFF • PortRate: R400G • ModulationFormat: 16QAM • BaudRate: 69.4
	00B08E#NCS1K4-1.2T-K9#1#1955	00B08E#NCS1K4-1.2T-K9#2#SD-FEC-27-DE-OFF#R500G#32QAM#69.4	• OC_ID: 1955 • FECMode: SD-FEC-27-DE-OFF • PortRate: R500G • ModulationFormat: 32QAM • BaudRate: 69.4
	00B08E#NCS1K4-1.2T-K9#1#4177	00B08E#NCS1K4-1.2T-K9#2#SD-FEC-27-DE-OFF#R600G#64QAM#71.96	• OC_ID: 4177 • FECMode: SD-FEC-27-DE-OFF • PortRate: R600G • ModulationFormat: 64QAM • BaudRate: 71.96
	00B08E#NCS1K4-1.2T-K9#1#3676	00B08E#NCS1K4-1.2T-K9#2#SD-FEC-27-DE-OFF#R200G#QPSK-SP-16QAM#60.05	• OC_ID: 3676 • FECMode: SD-FEC-27-DE-OFF • PortRate: R200G • ModulationFormat: QPSK-SP-16QAM • BaudRate: 60.05

	00B08E#NCS1K4-1.2T-K9#1#3790	00B08E#NCS1K4-1.2T-K9#2#SD-FEC-27-DE-OFF#R400G#16QAM-32QAM#62.59	• OC_ID: 3790 • FECMode: SD-FEC-27-DE-OFF • PortRate: R400G • ModulationFormat: 16QAM-32QAM • BaudRate: 62.59

OTSiMCA Connectivity-Service

CONC TAPI NBI supports provisioning of OTSiMCA connectivity service. An OTSiMCA connectivity service can be requested between 2 PHOTONIC_MEDIA/PHOTONIC_LAYER_QUALIFIER_MC SIPs (mapped to the MC NEP of ROADM Add/Drop port).

CONC TAPI NBI supports OTSiMCA connectivity service with the below characteristics:

- Single Carrier Transport
- No Regeneration allowed
- No Resiliency (No Protection/Restoration)
- Constrained or Unconstrained Provisioning
- Support of Alien/RON transport by allowing user to configure Application Identifier
- Explicit modelling of OTSiMC and OTSiMCA layers (on top of MC/MCA Layer) for finer modelling at Carrier-level.
- OTSiMC Carrier-level optical power monitoring for the service

Note: Provisioning of OTSiMCA connectivity-service from TAPI NBI client is supported only in case of OLS-only network scenario (i.e., ROADM is not connected with native TXP)

The model of the OTSiMCA connectivity-service shall be as per the general model defined in Table 21 – TAPI connectivity-service object definition. The table below gives the connectivity-service model with data relevant to OTSiMCA connectivity service.

Table 28 – TAPI connectivity-service model for OTSiMCA connectivity service

Attribute	Values/Format	Notes

end-point	List of {connectivity-service-end-point}	List contains 4 CSEPs: • 1 OTSiMC CSEP, 1 MC CSEP for one end of the service • 1 OTSiMC CSEP, 1 MC CSEP for other end of the service At each service end, the MC CSEP acts as the server CSEP for the OTSiMC CSEP at the same end. Provided by tapi-client See Table 29 – TAPI connectivity-service-end-point model for OTSiMCA connectivity service
connection	List of {connection-uuid}	List contains 2 items: • 1 OTSiMC Top-Connection reference • 1 MC Top-Connection reference Provided by tapi-server See Table 34 – TAPI connection model for OTSiMCA connectivity service
uuid	“[0-9a-fA-F]{8}[0-9a-fA-F]{4}[0-9a-fA-F]{12}”	Provided by tapi-client
name	• “value-name”: “SERVICE_NAME”, “value”: “[0-9a-zA-Z_]{64}” • “value-name”: “OPTICAL_FEASIBILITY_THRESHOLD”, “value”: ["UNDEFINED", "GREEN", "YELLOW", "ORANGE", "RED"] • “value-name”: “IGNORE_PATH_ALARM”, “value”: [“true”, “false”]	“OPTICAL_FEASIBILITY_THRESHOLD” and “IGNORE_PATH_ALARM” value-names are optional Provided by tapi-client
service-layer	["PHOTONIC_MEDIA"]	Provided by tapi-client
service-type	["POINT_TO_POINT_CONNECTIVITY"]	Provided by tapi-client
service-level	<absent>	Not supported
requested-capacity	<absent>	Not supported
connectivity-direction	["BIDIRECTIONAL"]	Provided by tapi-client
schedule	<absent>	Not supported

coroute-inclusion	<absent>	Not supported
diversity-exclusion	{connectivity-service-uuid}	Applicable only if the constraint is required Provided by tapi-client
connection-exclusion	<absent>	Not supported
connection-inclusion	<absent>	Not supported
cost-characteristic	• “cost-name”: [“LENGTH”, “OSNR”], “cost-value”: <absent>, “cost-algorithm”: <absent>	Applicable only if the constraint is required Provided by tapi-client
latency-characteristic	<absent>	Not supported
risk-diversity-characteristic	<absent>	Not supported
diversity-policy	[“NODE”, “LINK”]	Applicable only if the constraint is required Provided by tapi-client
route-objective-function	[“MIN_WORK_ROUTE_HOP”, “MIN_WORK_ROUTE_COST”]	Applicable only if the constraint is required Provided by tapi-client
route-direction	[“BIDIRECTIONAL”]	Applicable only if the constraint is required Provided by tapi-client
is-exclusive	<absent>	Not supported
max-allowed-cost	• “value”: “[0-9]{8}” • “priority”: <absent>	Applicable only if the constraint is required Provided by tapi-client
max-allowed-hops	• “value”: “[0-9]{8}” • “priority”: <absent>	Applicable only if the constraint is required Provided by tapi-client
max-allowed-delay	<absent>	Not supported
include-topology	<absent>	Not supported
avoid-topology	<absent>	Not supported
include-path	<absent>	Not supported
exclude-path	<absent>	Not supported

include-link	List of {uuid}	Applicable only if the constraint is required Provided by tapi-client
exclude-link	List of {uuid}	Applicable only if the constraint is required Provided by tapi-client
include-node	List of {uuid}	Applicable only if the constraint is required Only ROADM/ILA nodes can be referenced for inclusion (TXP/Regen node is not applicable) Provided by tapi-client
exclude-node	List of {uuid}	Applicable only if the constraint is required Only ROADM/ILA nodes can be referenced for exclusion (TXP/Regen node is not applicable) Provided by tapi-client
preferred-transport-layer	["PHOTONIC_MEDIA"]	Applicable only if the constraint is required Provided by tapi-client
resilience-type	• restoration-policy: [“NA”] • protection-type: [“NO_PROTECTON”]	Applicable only if the constraint is required Provided by tapi-client
restoration-coordinate-type	<absent>	Not supported
restore-priority	<absent>	Not supported
reversion-mode	<absent>	Not supported
wait-to-revert-time	<absent>	Not supported
hold-off-time	<absent>	Not supported
is-lock-out	<absent>	Not supported
is-frozen	<absent>	Not supported
is-coordinated-switching-both-ends	<absent>	Not supported

max-switch-times	<absent>	Not supported
preferred-restoration-layer	<absent>	Not supported
administrative-state	["UNLOCKED", "LOCKED"]	Provided by tapi-client
operational-state	["ENABLED", "DISABLED"]	Provided by tapi-server
lifecycle-state	["PLANNED", "INSTALLED", "PENDING_REMOVAL"]	Provided by tapi-server

The table below gives the connectivity-service-end-point model with data relevant to OTSiMCA connectivity service.

Table 29 – TAPI connectivity-service-end-point model for OTSiMCA connectivity service

Attribute	Values/Format	Notes
layer-protocol-name	["PHOTONIC_MEDIA"]	Provided by tapi-client
layer-protocol-qualifier	[“PHOTONIC_LAYER_QUALIFIER_OTSiMC”, “PHOTONIC_LAYER_QUALIFIER_MC”]	The layer-protocol-qualifier indicates type of the CSEP (OTSiMC/MC CSEP) Provided by tapi-client
service-interface-point	{service-interface-point-uuid}	The OTSiMC and MC CSEPs at the same service end refer to the same SIP at that end. Provided by tapi-client
connection-end-point	{topology-uuid, node-uuid, node-edge-point-uuid, connection-end-point-uuid}	The OTSiMC CSEP at each service end refers to the OTSiMC CEP supporting the OTSiMC connection at the same end. The MC CSEP at each service end refers to the MC CEP supporting the MC connection at the same end. Provided by tapi-server
capacity	<absent>	Not supported
direction	[“BIDIRECTIONAL”]	Provided by tapi-client
role	[“SYMMETRIC”]	Provided by tapi-client
protection-role	["NA"]	Provided by tapi-client
peer-fwd-connectivity-service-end-point	<absent>	Not supported

protecting-connectivity-service-end-point	<absent>	Not supported
server-connectivity-service-end-point	{connectivity-service-uuid, connectivity-service-end-point-local-id} For OTSiMC CSEP, it refers to the MC CSEP at the same service end It is absent for MC CSEP Provided by tapi-client
local-id	"[0-9a-zA-Z_]{32}"	Provided by tapi-client
name	• “value-name”: “CONN_SERVICE_END_POINT_NAME”, “value”: “[0-9a-zA-Z_]{64}”	Provided by tapi-client
administrative-state	["UNLOCKED", "LOCKED"]	Provided by tapi-client
operational-state	["ENABLED", "DISABLED"]	Provided by tapi-server
lifecycle-state	["INSTALLED"]	Provided by tapi-server
otsi-connectivity-service-end-point-spec	<absent>	Not supported
media-channel-connectivity-service-end-point-spec	<absent>	Not supported
otsia-connectivity-service-end-point-spec	{otsia-connectivity-service-end-point-spec}	It is present for OTSiMC CSEP (as a proprietary extension to support Alien transport) Absent for MC CSEP Provided by tapi-client See Table 30 – TAPI otsia-connectivity-service-end-point-spec model for OTSiMCA connectivity service
mca-connectivity-service-end-point-spec	{mca-connectivity-service-end-point-spec}	It is present on both OTSiMC and MC CSEPs to indicate the media channel service-end properties at OTSiMC and MC layers respectively. Provided by tapi-client See Table 31 – TAPI mca-connectivity-service-end-point-spec model for OTSiMCA connectivity service

odu-connectivity-service-end-point-spec	<absent>	Not supported

The table below gives the otsia-connectivity-service-end-point-spec model with data relevant to OTSiMCA connectivity service.

Table 30 – TAPI otsia-connectivity-service-end-point-spec model for OTSiMCA connectivity service

Attribute	Allowed Values/Format	Notes
List of {otsi-config}:	{central-frequency, spectrum, application-identifier, modulation, laser-control, transmit-power, total-power-warn-threshold-upper, total-power-warn-threshold-lower, local-id, name}	Provided by tapi-client
central-frequency	• "frequency-constraint": <absent> • “central-frequency”: “[0-9]{9}”	Provided by tapi-client/tapi-server
spectrum	<absent>	Not supported
application-identifier	• “application-identifier-type”: [”PROPRIETARY”] • “application-code”: "[0-9a-zA-Z_]{64}"	See Table 27 – OTSi Application Codes supported within CONC TAPI NBI Provided by tapi-client
modulation	<absent>	Not supported
laser-control	<absent>	Not supported
transmit-power	• “total-power”: “[0-9].[0-9]{7}” • “power-spectral-density”: <absent>	Provided by tapi-server
total-power-warn-threshold-upper	<absent>	Not supported
total-power-warn-threshold-lower	<absent>	Not supported
local-id	"[0-9a-zA-Z_]{32}"	Provided by tapi-client
name	<absent>	Not supported
number-of-otsi	1	Provided by tapi-client

The table below gives the mca-connectivity-service-end-point-spec model with data relevant to OTSiMCA connectivity service.

Table 31 – TAPI mca-connectivity-service-end-point-spec model for OTSiMCA connectivity service

Attribute	Allowed Values/Format	Notes

List of {mc-config}:	{spectrum, power-management-config-pac, local-id, name}	Provided by tapi-client
spectrum	<absent>	Not supported
power-management-config-pac	<absent>	Not supported
local-id	"[0-9a-zA-Z_]{32}"	Provided by tapi-client
name	For OTSiMC: • "value-name": "CSEP_OTSI_MC_NAME", "value": "[0-9a-zA-Z_]{64}" For MC: • "value-name": "CSEP_MC_NAME", "value": "[0-9a-zA-Z_]{64}"	Provided by tapi-client
number-of-mc	1	Provided by tapi-client
capacity	<absent>	Not supported

The creation of the OTSiMCA connectivity-service results in the creation of various NEP/CEP objects at different layers. For server layers, the necessary NEP/CEP are created only if they do not exist already.

The full NEP/CEP model as a result of OTSiMCA connectivity service provisioning is provided in below table.

Table 32 – TAPI NEP/CEP objects associated with OTSiMCA connectivity service

TAPI Node	Port Type	NEP/CEP Hierarchy	Description
ROADM	Degree	– OTSiMC CEP – OTSiMC NEP – MC CEP – MC NEP – OMS CEP – OMS NEP – OTS CEP – OTS NEP	MC CEP, OTSiMC NEP and OTSiMC CEP are created as a result of OTSiMCA connectivity service creation
	Add/Drop	– OTSiMC CEP – OTSiMC NEP – MC CEP – MC NEP – OMS CEP – OMS NEP	MC CEP, OTSiMC NEP and OTSiMC CEP are created as a result of OTSiMCA connectivity service creation

The creation of the OTSiMCA connectivity-service results in the creation of various connection objects at different layers. For server layers, the necessary connections are created only if they do not exist already.

The types of connections associated with OTSiMCA connectivity-service are provided in below table.

Table 33 – TAPI connection objects associated with OTSiMCA connectivity service

Layer	Connection Type	Description
OTSiMC	(Top)Connection	• The OTSiMC (Top)Connection represents the OTSiMC layer connectivity between ROADM Add/Drop ports within the OLS domain providing transport of single OTSi signal (within an MC). • OTSiMC (Top)Connection is delimited by 2 OTSiMC CEPs – each one present on top of the OTSiMC NEP on the Add/Drop port within the ROADM node. • The OTSiMC (Top)Connection refers to a list of OTSiMC (Cross)Connections as its lower connections (indicating the lower partitioning).
	(Cross)Connection	• The OTSiMC (Cross)Connection represents a cross connection at the OTSiMC layer within the ROADM node. It indicates the forwarding/cross-connection of a single OTSi signal (within an MC) between the Add/Drop and Degree ports or between 2 Degree ports. • OTSiMC (Cross)Connection is delimited by 2 OTSiMC CEPs - each one present on top of the OTSiMC NEP within a ROADM node (i.e., Add/Drop or Degree ports).
MC	(Top)Connection	• The MC (Top)Connection represents the MC layer connectivity between ROADM Add/Drop ports within the OLS domain providing transport of MC (containing one or more OTSiMC signals). • MC (Top)Connection is delimited by 2 MC CEPs – each one present on top of the MC NEP on the Add/Drop port within the ROADM node. • The MC (Top)Connection refers to a list of MC (Cross)Connections as its lower connections (indicating the lower partitioning).
	(Cross)Connection	• The MC (Cross)Connection represents a cross connection at the MC layer within the ROADM node. It indicates the forwarding/cross-connection of MC (containing one or more OTSiMC signals) between the Add/Drop and Degree ports or between 2 Degree ports. • MC (Cross)Connection is delimited by 2 MC CEPs - each one present on top of the MC NEP within a ROADM node (i.e., Add/Drop or Degree ports).

The model of the connection objects related to OTSiMCA connectivity-service shall be as per the general model defined in Table 25 – TAPI connection object definition. The table below gives the connection model with data relevant to OTSiMCA connectivity service.

Table 34 – TAPI connection model for OTSiMCA connectivity service

Attribute	Allowed Values/Format	Notes

connection-end-point	List of {topology-uuid, node-uuid, node-edge-point-uuid, connection-end-point-uuid}	List contains 2 items.
		
		For (Top)Connection:
		• For OTSiMC: References 2 OTSiMC CEPs that are the ends of the OTSiMC (Top)Connection.
		• For MC: References 2 MC CEPs that are the ends of the MC (Top)Connection.
		For (Cross)Connection:
		• For OTSiMC: References 2 OTSiMC CEPs that are the ends of the OTSiMC (Cross)Connection.
		• For MC: References 2 MC CEPs that are the ends of the MC (Cross)Connection.
		
		Provided by tapi-server

lower-connection	List of {connection-uuid}	List contains [0..N] items.
		
		For (Top)Connection:
		• For OTSiMC: References OTSiMC (Cross)Connections that partitions the OTSiMC (Top)Connection.
		• For MC: References MC (Cross)Connections that partitions the MC (Top)Connection.
		For (Cross)Connection:
		• For OTSiMC: <Absent>
		• For MC: <Absent>
		
		Provided by tapi-server

supported-client-link	<absent>	Not supported
route	List of {route}	List contains 1 item representing the main route. Provided by tapi-server See Table 35 – TAPI route model for connections of OTSiMCA connectivity service
switch-control	<absent>	Not supported
direction	"BIDIRECTIONAL”	Provided by tapi-server
layer-protocol-name	"PHOTONIC_MEDIA"	Provided by tapi-server

connection-spec-reference	<absent>	Not supported
uuid	“[0-9a-fA-F]{8}[0-9a-fA-F]{4}[0-9a-fA-F]{12}”	Provided by tapi-server
name	List of {value-name, value} • “value-name”: “CONNECTION_NAME”, “value”: “[0-9a-zA-Z_]{64}”	Provided by tapi-server
operational-state	["ENABLED", "DISABLED"]	Provided by tapi-server
lifecycle-state	["PLANNED", "INSTALLED", "PENDING_REMOVAL"]	Provided by tapi-server

The table below gives the route model with data relevant to the connections of OTSiMCA connectivity service.

Table 35 – TAPI route model for connections of OTSiMCA connectivity service

Attribute	Allowed Values/Format	Notes

connection-end-point	List of {topology-uuid, node-uuid, node-edge-point-uuid, connection-end-point-uuid}	List contains [2..N] items.
		
		For (Top)Connection:
		• For OTSiMC: References all OTSiMC CEPs that are traversed by the OTSiMC (Top)Connection (though each of its OTSiMC lower connections).
		• For MC: References all MC CEPs that are traversed by the MC (Top)Connection (though each of its MC lower connections)
		For (Cross)Connection:
		• For OTSiMC: References the 2 OTSiMC CEPs that are the ends of the OTSiMC (Cross)Connection.
		• For MC: References the 2 MC CEPs that are the ends of the MC (Cross)Connection.
		
		Provided by tapi-server

resilience-route-pac:	<absent>	Not supported
resilience-route-pac: priority	<absent>	Not supported

resilience-route-pac: route-state	<absent>	Not supported
resilience-route-pac: local-id	<absent>	Not supported
resilience-route-pac: name	<absent>	Not supported
local-id	"[0-9a-zA-Z_]{32}"	Provided by tapi-server
name	List of {value-name, value} • “value-name”: “ROUTE_NAME”, “value”: “[0-9a-zA-Z_]{64}”	Provided by tapi-server

The below figure depicts the OTSiMCA connectivity-service model within CONC TAPI NBI.

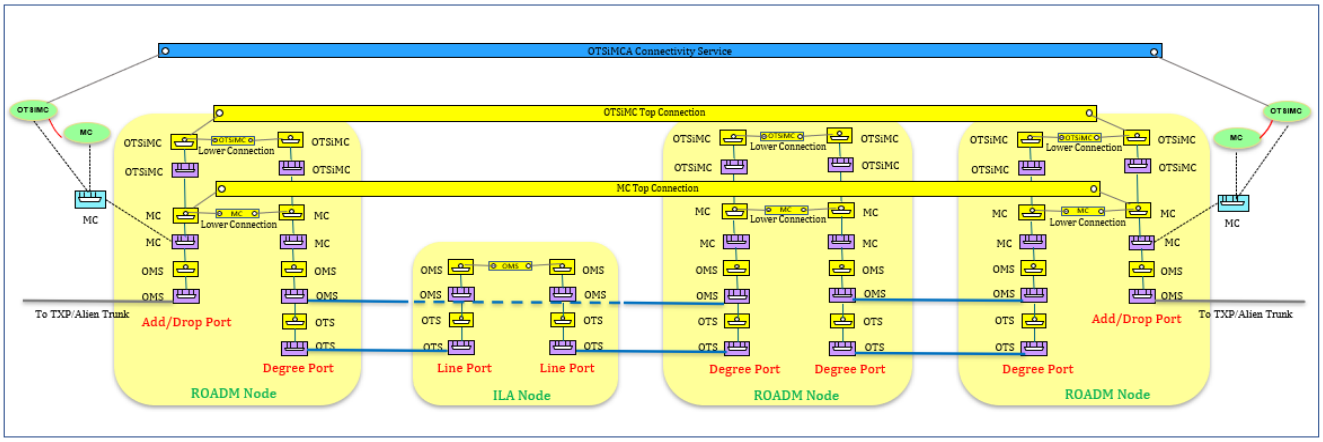

Figure 4 – OTSiMCA connectivity-service model

Once OTSiMCA connectivity-service is provisioned, CONC automatically starts power monitoring on the OTSiMC CEPs that are part of the OTSiMC (Top)Connection’s route (i.e., endpoints of the associated OTSiMC (cross)connections) supporting the service. The power monitoring is stopped as part of the service deletion.

DSR/OTU Client Connectivity-Service

CONC TAPI NBI supports provisioning of DSR/OTU client connectivity service.

A DSR client connectivity service can be requested between 2 DSR SIPs (mapped to the DSR NEP of TXP DSR Client ports). Similarly, a OTU client connectivity service can be requested between 2 ODU SIPs (mapped to the ODU NEP of TXP OTU Client ports).

CONC TAPI NBI supports DSR/OTU client connectivity service with the below characteristics:

- DSR (Ethernet signal type) over OTN (applicable only for DSR client connectivity services)
- Transponder or Muxponder (with ODU multiplexing) configuration
- Single Carrier Transport
- Support for Regeneration (3R)
- No Resiliency (No Protection/Restoration)
- Constrained or Unconstrained Provisioning
- No support for ODU server constraints
- OTSiMC Carrier-level optical power monitoring for connectivity across OLS domain

The model of the DSR/OTU client connectivity-service shall be as per the general model defined in Table 21 – TAPI connectivity-service object definition. The table below gives the connectivity-service model with data relevant to DSR/OTU client connectivity service.

Table 36 – TAPI connectivity-service model for DSR/OTU client connectivity service

Attribute	Values/Format	Notes
end-point	List of {connectivity-service-end-point}	List contains 2 CSEPs: For DSR client: • 1 DSR CSEP for one end of the service • 1 DSR CSEP for other end of the service For OTU client: • 1 OTU CSEP for one end of the service • 1 OTU CSEP for other end of the service Provided by tapi-client See Table 37 - TAPI connectivity-service-end-point model for DSR/OTU client connectivity service

connection	List of {connection-uuid}	List contains below references: • 1 DSR Top-Connection reference (applicable only for DSR client) • [1..N] ODU Top-Connection references • N+1 OTSi Top-Connection references, where N is the number of Regen points in the path • N+1 OTSiMC Top-Connection references, where N is the number of Regen points in the path • N+1 MC Top-Connection references, where N is the number of Regen points in the path Provided by tapi-server See Table 40 – TAPI connection model for DSR/OTU client connectivity service
uuid	"[0-9a-fA-F]{8}[0-9a-fA-F]{4}[0-9a-fA-F]{12}"	Provided by tapi-client
name	• "value-name": "SERVICE_NAME", "value": "[0-9a-zA-Z_]{64}" • "value-name": "ALLOW_AUTO_REGEN", "value": ["true", "false"] • "value-name": "OPTICAL_FEASIBILITY_THRESHOLD", "value": ["UNDEFINED", "GREEN", "YELLOW", "ORANGE", "RED"] • "value-name": "IGNORE_PATH_ALARM", "value": ["true", "false"]	"ALLOW_AUTO_REGEN", "OPTICAL_FEASIBILITY_THRESHOLD" and "IGNORE_PATH_ALARM" value-name/value are optional Provided by tapi-client
service-layer	For DSR client: • ["DSR"] For OTU client: • ["ODU"]	Provided by tapi-client
service-type	["POINT_TO_POINT_CONNECTIVITY"]	Provided by tapi-client
service-level	<absent>	Not supported
requested-capacity	<absent>	Not supported
connectivity-direction	["BIDIRECTIONAL"]	Provided by tapi-client
schedule	<absent>	Not supported

coroute-inclusion	<absent>	Not supported
diversity-exclusion	{connectivity-service-uuid}	Applicable only if the constraint is required Provided by tapi-client
connection-exclusion	<absent>	Not supported
connection-inclusion	<absent>	Not supported
cost-characteristic	• “cost-name”: [“LENGTH”, “OSNR”], “cost-value”: <absent>, “cost-algorithm”: <absent>	Applicable only if the constraint is required Provided by tapi-client
latency-characteristic	<absent>	Not supported
risk-diversity-characteristic	<absent>	Not supported
diversity-policy	[“NODE”, “LINK”]	Applicable only if the constraint is required Provided by tapi-client
route-objective-function	[“MIN_WORK_ROUTE_HOP”, “MIN_WORK_ROUTE_COST”]	Applicable only if the constraint is required Provided by tapi-client
route-direction	[“BIDIRECTIONAL”]	Applicable only if the constraint is required Provided by tapi-client
is-exclusive	<absent>	Not supported
max-allowed-cost	• “value”: “[0-9]{8}” • “priority”: <absent>	Applicable only if the constraint is required Provided by tapi-client
max-allowed-hops	• “value”: “[0-9]{8}” • “priority”: <absent>	Applicable only if the constraint is required Provided by tapi-client
max-allowed-delay	<absent>	Not supported
include-topology	<absent>	Not supported
avoid-topology	<absent>	Not supported
include-path	<absent>	Not supported
exclude-path	<absent>	Not supported

include-link	List of {uuid}	Applicable only if the constraint is required Provided by tapi-client
exclude-link	List of {uuid}	Applicable only if the constraint is required Provided by tapi-client
include-node	List of {uuid}	Applicable only if the constraint is required Only ROADM/ILA nodes can be referenced for inclusion (TXP/Regen node is not supported)Provided by tapi-client
exclude-node	List of {uuid}	Applicable only if the constraint is required Only ROADM/ILA nodes can be referenced for exclusion (TXP/Regen node is not supported) Provided by tapi-client
preferred-transport-layer	["PHOTONIC_MEDIA"]	Applicable only if the constraint is required Provided by tapi-client
resilience-type	• restoration-policy: [“NA”] • protection-type: [“NO_PROTECTON”]	Applicable only if the constraint is required Provided by tapi-client
restoration-coordinate-type	<absent>	Not supported
restore-priority	<absent>	Not supported
reversion-mode	<absent>	Not supported
wait-to-revert-time	<absent>	Not supported
hold-off-time	<absent>	Not supported
is-lock-out	<absent>	Not supported
is-frozen	<absent>	Not supported
is-coordinated-switching-both-ends	<absent>	Not supported
max-switch-times	<absent>	Not supported

preferred-restoration-layer	<absent>	Not supported
administrative-state	["UNLOCKED", "LOCKED"]	Provided by tapi-client
operational-state	["ENABLED", "DISABLED"]	Provided by tapi-server
lifecycle-state	["PLANNED", "INSTALLED", "PENDING_REMOVAL"]	Provided by tapi-server

The table below gives the connectivity-service-end-point model with data relevant to DSR/OTU client connectivity service.

Table 37 - TAPI connectivity-service-end-point model for DSR/OTU client connectivity service

Attribute	Values/Format	Notes
layer-protocol-name	For DSR client: • [“DSR”] For OTU client: • [“ODU”]	Provided by tapi-client
layer-protocol-qualifier	For DSR client: • “DIGITAL_SIGNAL_TYPE_": [”10_GigE_LAN”, ”40_GigE”, ”100_GigE”] For OTU client: • "ODU_TYPE_": [”ODU2”, ”ODU2E”, ”ODU4”]	Provided by tapi-client
service-interface-point	{service-interface-point-uuid}	Provided by tapi-client
connection-end-point	{topology-uuid, node-uuid, node-edge-point-uuid, connection-end-point-uuid}	Provided by tapi-server
capacity	<absent>	Not supported
direction	[“BIDIRECTIONAL”]	Provided by tapi-client
role	[“SYMMETRIC”]	Provided by tapi-client
protection-role	["NA"]	Provided by tapi-client
peer-fwd-connectivity-service-end-point	<absent>	Not supported
protecting-connectivity-service-end-point	<absent>	Not supported
server-connectivity-service-end-point	<absent>	Not supported
local-id	"[0-9a-zA-Z_]{32}"	Provided by tapi-client

name	• “value-name”: “CONN_SERVICE_END_POINT_NAME”, “value”: “[0-9a-zA-Z_]{64}”	Provided by tapi-client
administrative-state	["UNLOCKED", "LOCKED"]	Provided by tapi-client
operational-state	["ENABLED", "DISABLED"]	Provided by tapi-server
lifecycle-state	["INSTALLED"]	Provided by tapi-server
otsi-connectivity-service-end-point-spec	<absent>	Not supported
media-channel-connectivity-service-end-point-spec	<absent>	Not supported
otsia-connectivity-service-end-point-spec	<absent>	Not supported
mca-connectivity-service-end-point-spec	<absent>	Not supported
odu-connectivity-service-end-point-spec	<absent>	Not supported

The creation of the DSR/OTU client connectivity-service results in the creation of various NEP/CEP objects at different layers. For server layers, the necessary NEP/CEP are created only if they do not exist already.

The full NEP/CEP model as a result of DSR/OTU client connectivity service provisioning is provided in below table.

Table 38 – TAPI NEP/CEP objects associated with DSR/OTU client connectivity service

TAPI Node	Port Type	NEP/CEP Hierarchy	Description
TXP/ ODUSwitch/ Regen	Line (Trunk)	– ODU CEP [1..N] – ODU NEP [1..N] – OTSi CEP – OTSi NEP – OMS CEP – OMS NEP	OTSi CEP, ODU NEP(s) and ODU CEP(s) are created as a result of DSR/OTU client connectivity service creation (if not already present). The number of ODU NEPs/CEPs and their hierarchy depends on the ODU multiplexing hierarchy.
	DSR Client	– DSR CEP – DSR NEP – ODU CEP – ODU NEP	Applicable only for DSR client services ODU NEP, ODU CEP and DSR CEP are created as a result of DSR client connectivity service creation (applicable for TXP nodes)
	OTU Client	– ODU CEP – ODU NEP	Applicable only for OTU client services ODU CEP is created as a result of ODU connectivity service creation (applicable for TXP nodes)

ROADM	Degree	– OTSiMC CEP – OTSiMC NEP – MC CEP – MC NEP – OMS CEP – OMS NEP – OTS CEP – OTS NEP	MC CEP, OTSiMC NEP and OTSiMC CEP are created as a result of DSR/OTU client connectivity service creation (if not already present)
	Add/Drop	– OTSiMC CEP – OTSiMC NEP – MC CEP – MC NEP – OMS CEP – OMS NEP	MC CEP, OTSiMC NEP and OTSiMC CEP are created as a result of DSR/OTU client connectivity service creation (if not already present)

The creation of the DSR/OTU client connectivity-service results in the creation of various connection objects at different layers. For server layers, the necessary connections are created only if they do not exist already.

The types of connections associated with DSR/OTU client connectivity-service are provided in below table.

Table 39 – TAPI connection objects associated with DSR/OTU client connectivity service

Layer	Connection Type	Description
DSR	(Top)Connection	• The DSR (Top)Connection represents the end-to-end DSR layer connectivity across the TXP/OLS domain providing transport for DSR client (e.g., Ethernet signal type). Applicable only for DSR client services. • The DSR (Top)Connection is delimited by 2 DSR CEPs – each one present on top of the DSR NEP within a TXP node (i.e., DSR client port). • The DSR (Top)Connection does not refer to any lower connections.
ODU	(Top)Connection	• The ODU (Top)Connection represents the end-to-end ODU layer connectivity across the TXP/OLS domain (ODU Trail) providing transport for a given ODU layer. The ODU (Top)Connection is created at every layer of the ODU Multiplexing hierarchy. – In case of DSR client service, the Lowest Order ODU (Top)Connection represents transport of the mapped/adapted DSR client signal over the ODU (e.g., 10G Ethernet over ODU2). For OTU client service, it represents the client connection itself. – The other Higher Order ODU (Top)Connection represents transport of the multiplexed ODU layers (e.g., ODU4, ODUCN). – The Highest Order ODU (Top)Connection also represents the ODU transport (e.g. ODU4, ODUCN) over the optical OTSi layer. • ODU (Top)Connection is delimited by 2 ODU CEPs – each one present on top of the ODU NEP providing ODU layer transport within the TXP node (i.e., Client port or Line/Trunk port) • The ODU (Top)Connection that encompasses ODU forwarding/switching elements (e.g., the Lowest Order ODU or the Regenerated Highest-order ODU) refers to a list of ODU (Cross)Connections as its lower-connections (indicating the lower partitioning). If ODU (Top)Connection has no ODU forwarding/switching elements, then it does not refer to any lower connections.

	(Cross)Connection	• The ODU (Cross)Connection represents a cross connection at the ODU layer within the TXP/ODU-Switch/Regen node. It indicates the forwarding/cross-connection of a ODU signal between ODU ports (e.g., between DSR/OTU client port and Line/Trunk port or between Line/Trunk ports). • ODU (Cross)Connection is delimited by 2 ODU CEPs - each one present on top of the ODU NEP within a TXP/ODU-Switch/Regen node.
OTSi	(Top)Connection	• The OTSi (Top)Connection represents the OTSi layer connectivity between TXP/Regen nodes within the TXP/OLS domain providing transport of one optical carrier signal. • The OTSi (Top)Connection is delimited by 2 OTSi CEPs – each one present on top of the OTSi NEP within the TXP/Regen node (i.e., Line/Trunk port). • The OTSi (Top)Connection does not refer to any lower connections.
OTSiMC	(Top)Connection	• The OTSiMC (Top)Connection represents the OTSiMC layer connectivity between ROADM Add/Drop ports within the OLS domain providing transport of single OTSi signal (within an MC). • OTSiMC (Top)Connection is delimited by 2 OTSiMC CEPs – each one present on top of the OTSiMC NEP on the Add/Drop port within the ROADM node. • The OTSiMC (Top)Connection refers to a list of OTSiMC (Cross)Connections as its lower connections (indicating the lower partitioning).
	(Cross)Connection	• The OTSiMC (Cross)Connection represents a cross connection at the OTSiMC layer within the ROADM node. It indicates the forwarding/cross-connection of a single OTSi signal (within an MC) between the Add/Drop and Degree ports or between 2 Degree ports. • OTSiMC (Cross)Connection is delimited by 2 OTSiMC CEPs - each one present on top of the OTSiMC NEP within a ROADM node (i.e., Add/Drop or Degree ports).
MC	(Top)Connection	• The MC (Top)Connection represents the MC layer connectivity between ROADM Add/Drop ports within the OLS domain providing transport of MC (containing one or more OTSiMC signals). • MC (Top)Connection is delimited by 2 MC CEPs – each one present on top of the MC NEP on the Add/Drop port within the ROADM node. • The MC (Top)Connection refers to a list of MC (Cross)Connections as its lower connections (indicating the lower partitioning).
	(Cross)Connection	• The MC (Cross)Connection represents a cross connection at the MC layer within the ROADM node. It indicates the forwarding/cross-connection of MC (containing one or more OTSiMC signals) between the Add/Drop and Degree ports or between 2 Degree ports. • MC (Cross)Connection is delimited by 2 MC CEPs - each one present on top of the MC NEP within a ROADM node (i.e., Add/Drop or Degree ports).

The model of the connection objects related to DSR/OTU client connectivity-service shall be as per the model defined in Table 25 – TAPI connection object definition. The table below gives the connection model with data relevant to DSR/OTU client connectivity service.

Table 40 – TAPI connection model for DSR/OTU client connectivity service

Attribute	Allowed Values/Format	Notes

connection-end-point	List of {topology-uuid, node-uuid, node-edge-point-uuid, connection-end-point-uuid}	List contains 2 items.
		
		For (Top)Connection:
		• For DSR: References 2 DSR CEPs that are the ends of the DSR (Top)Connection (applicable only for DSR client services).
		• For ODU: References 2 ODU CEPs that are the ends of the ODU (Top)Connection.
		• For OTSi: References 2 OTSi CEPs that are the ends of the OTSi (Top)Connection.
		• For OTSiMC: References 2 OTSiMC CEPs that are the ends of the OTSiMC (Top)Connection.
		• For MC: References 2 MC CEPs that are the ends of the MC (Top)Connection.
		For (Cross)Connection:
		• For ODU: References 2 ODU CEPs that are the ends of the ODU (Cross)Connection.
		• For OTSiMC: References 2 OTSiMC CEPs that are the ends of the OTSiMC (Cross)Connection.
		• For MC: References 2 MC CEPs that are the ends of the MC (Cross)Connection.
		
		Provided by tapi-server

lower-connection	List of {connection-uuid}	List contains [0..N] items.
		
		For (Top)Connection:
		• For DSR: <Absent>
		• For ODU: References ODU (Cross)Connections that partitions the ODU (Top)Connection (if applicable, else <Absent>).
		• For OTSi: <Absent>
		• For OTSiMC: References OTSiMC (Cross)Connections that partitions the OTSiMC (Top)Connection.
		• For MC: References MC (Cross)Connections that partitions the MC (Top)Connection.
		For (Cross)Connection:
		• <Absent>
		
		Provided by tapi-server

supported-client-link	<absent>	Not supported
route	List of {route}	List contains 1 item representing the main route. Provided by tapi-server See Table 41 – TAPI route model for connections of DSR/OTU client connectivity service
switch-control	<absent>	Not supported
direction	"BIDIRECTIONAL”	Provided by tapi-server
layer-protocol-name	For DSR client: • [“DSR”] For OTU client: • [“ODU”]	Provided by tapi-server
connection-spec-reference	<absent>	Not supported
uuid	“[0-9a-fA-F]{8}[0-9a-fA-F]{4}[0-9a-fA-F]{12}”	Provided by tapi-server
name	List of {value-name, value} • “value-name”: “CONNECTION_NAME”, “value”: “[0-9a-zA-Z_]{64}”	Provided by tapi-server
operational-state	["ENABLED", "DISABLED"]	Provided by tapi-server

lifecycle-state	["PLANNED", "INSTALLED", "PENDING_REMOVAL"]	Provided by tapi-server

The table below gives the route model with data relevant to the connections of DSR/OTU client connectivity service.

Table 41 – TAPI route model for connections of DSR/OTU client connectivity service

Attribute	Allowed Values/Format	Notes

connection-end-point	List of {topology-uuid, node-uuid, node-edge-point-uuid, connection-end-point-uuid}	List contains [2..N] items.
		
		For (Top)Connection:
		• For DSR: References all DSR CEPs that are traversed by the DSR (Top)Connection (just the 2 ends of it) (applicable only for DSR client services).
		• For ODU: References all ODU CEPs that are traversed by the ODU (Top)Connection (though each of its lower connections, if applicable or just the 2 ends).
		• For OTSi: References all OTSi CEPs that are traversed by the OTSi (Top)Connection (just the 2 ends of it).
		• For OTSiMC: References all OTSiMC CEPs that are traversed by the OTSiMC (Top)Connection (though each of its OTSiMC lower connections).
		• For MC: References all MC CEPs that are traversed by the MC (Top)Connection (though each of its MC lower connections)
		For (Cross)Connection:
		• For ODU: References the 2 ODU CEPs that are the ends of the ODU (Cross)Connection.
		• For OTSiMC: References the 2 OTSiMC CEPs that are the ends of the OTSiMC (Cross)Connection.
		• For MC: References the 2 MC CEPs that are the ends of the MC (Cross)Connection.
		
		Provided by tapi-server

resilience-route-pac:	<absent>	Not supported
resilience-route-pac: priority	<absent>	Not supported
resilience-route-pac: route-state	<absent>	Not supported

resilience-route-pac: local-id	<absent>	Not supported
resilience-route-pac: name	<absent>	Not supported
local-id	"[0-9a-zA-Z_]{32}"	Provided by tapi-server
name	List of {value-name, value} • “value-name”: “ROUTE_NAME”, “value”: “[0-9a-zA-Z_]{64}”	Provided by tapi-server

The below figure depicts the DSR client connectivity-service model within CONC TAPI NBI.

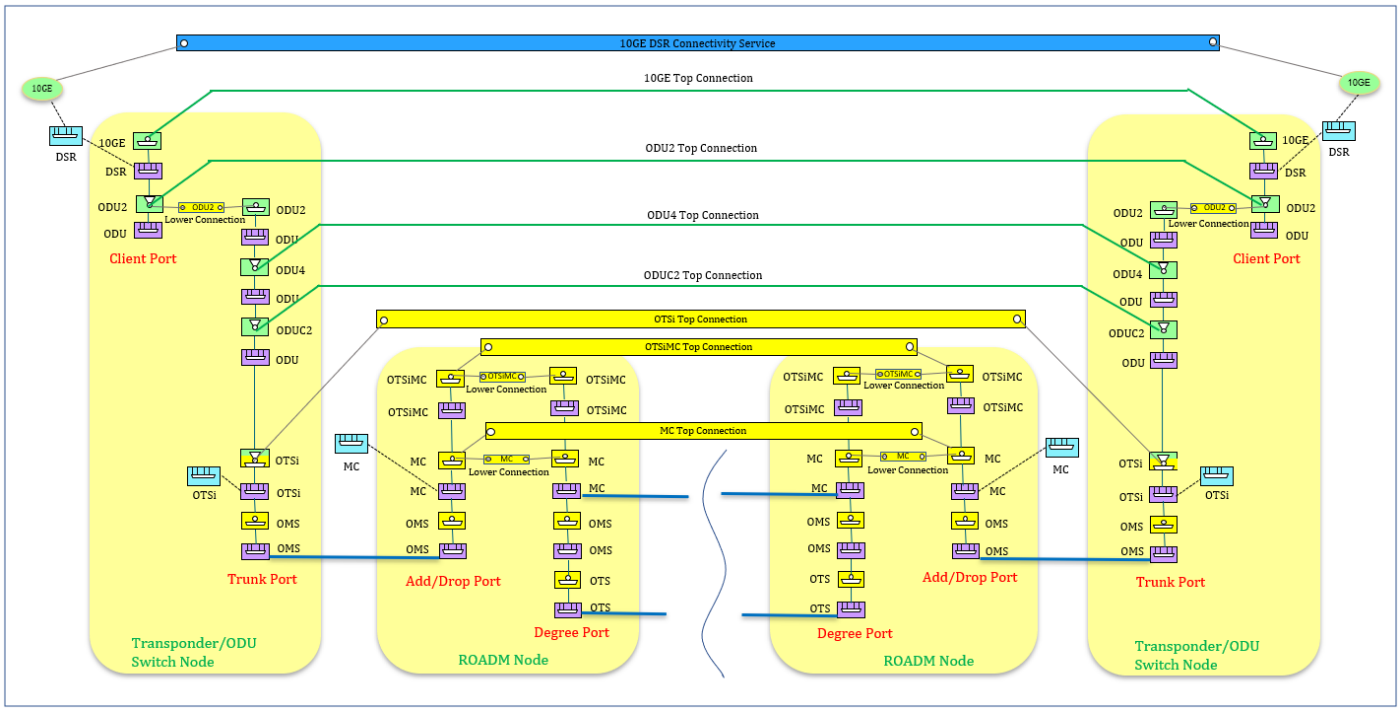

Figure 5 – DSR client connectivity-service model

The below figure depicts the OTU client connectivity-service model within CONC TAPI NBI.

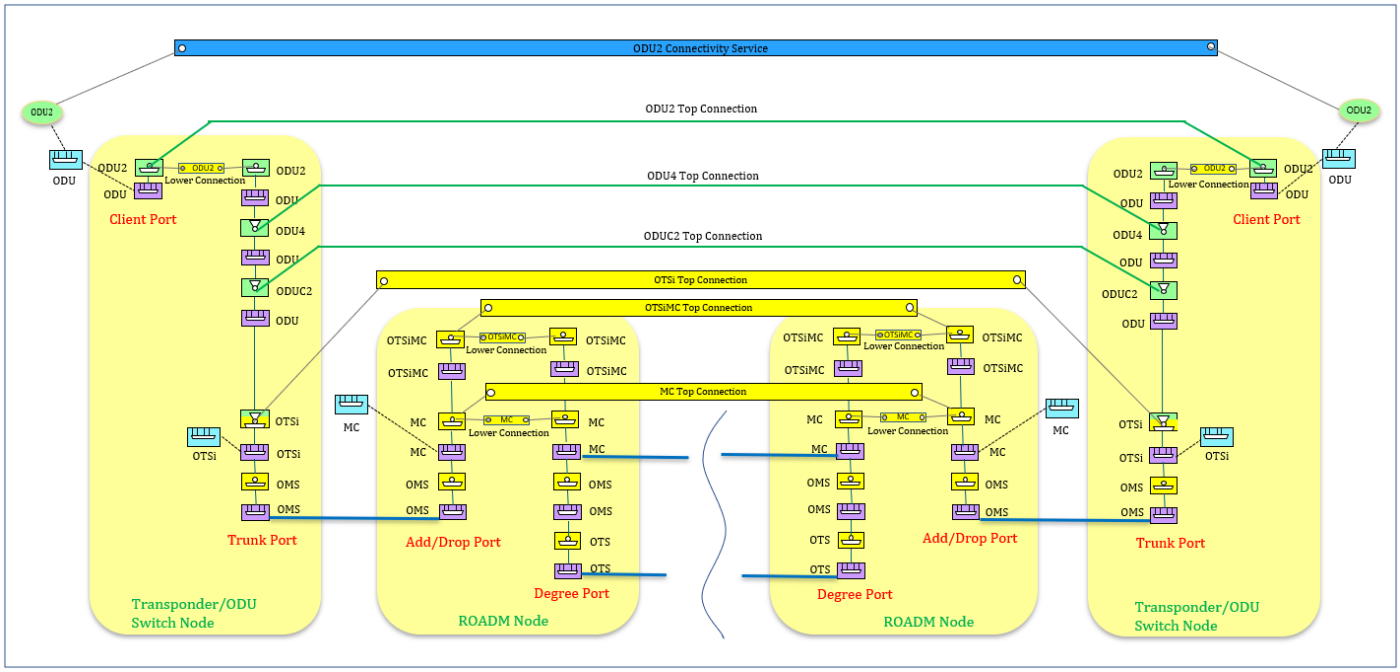

Figure 6 – OTU client connectivity-service model

The below figure depicts the DSR client connectivity-service model (with Regen) within CONC TAPI NBI.

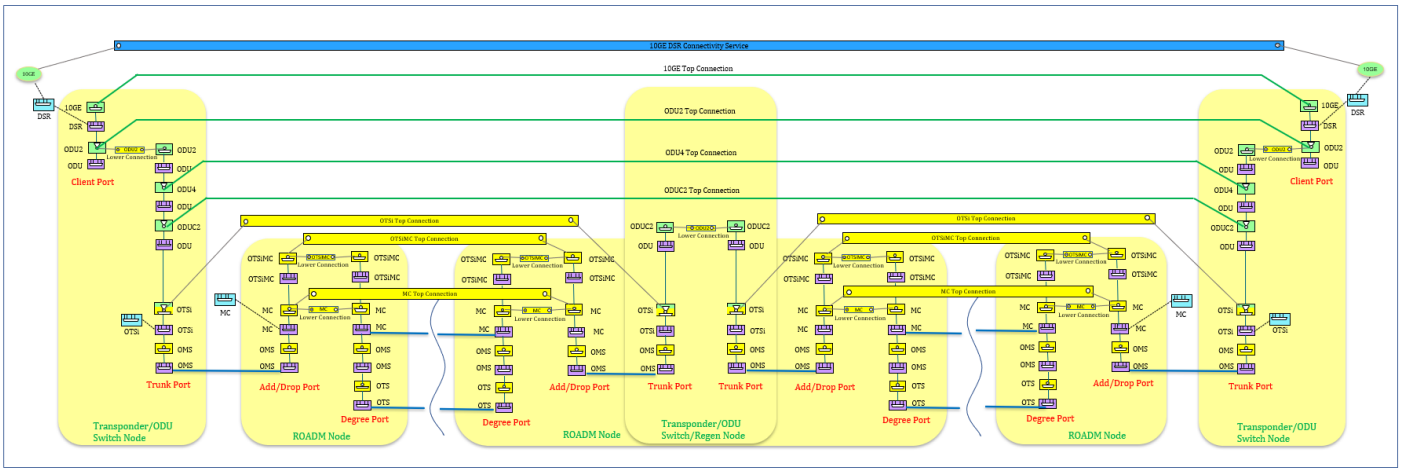

Figure 7 – DSR client connectivity-service (with Regen) model

Once the DSR/OTU connectivity-service is provisioned, CONC automatically starts power monitoring on the OTSiMC CEPs that are part of the server OTSiMC (Top)Connection's route (i.e., endpoints of the associated OTSiMC (cross)connections) supporting the service (if not already monitored). The power monitoring is stopped when the OTSiMC (Top)Connection is no more supporting any services.

TAPI Physical Context

The Physical Context represents the list of Devices and Physical Spans within the managed network. The Device is composed of Equipment and Access Ports. The Physical Spans represents the adjacency between Access Ports.

The TAPI Physical Context model is given in the table below.

Table 42 – TAPI physical-context object definition

Attribute	Allowed Values/Format	Mode	Support in CONC TAPI NBI	Notes
device	List of {device}	RO	Y	Provides the list of physical devices within the network Provided by tapi-server See Table 43 – TAPI device object definition
physical-span	List of {physical-span}	RO	Y	Provides the list of physical spans within the network Provided by tapi-server See Table 49 – TAPI physical-span object definition
uuid	"[0-9a-fA-F]{8}[0-9a-fA-F]{4}[0-9a-fA-F]{12}"	RO	N	Indicates an identifier that is universally unique within an identifier space (as per RFC 4122) UUID for the physical-context object
name	List of {value-name, value} • "value-name": String, "value": "[0-9a-zA-Z_]{64}"	RO	N	Provides name-value pairs related to the physical-context object

The hierarchical arrangement of the Physical Context objects – in particular the equipment objects – is given in the below figure. It shows the relative position of each "equipment" in a graphical representation.

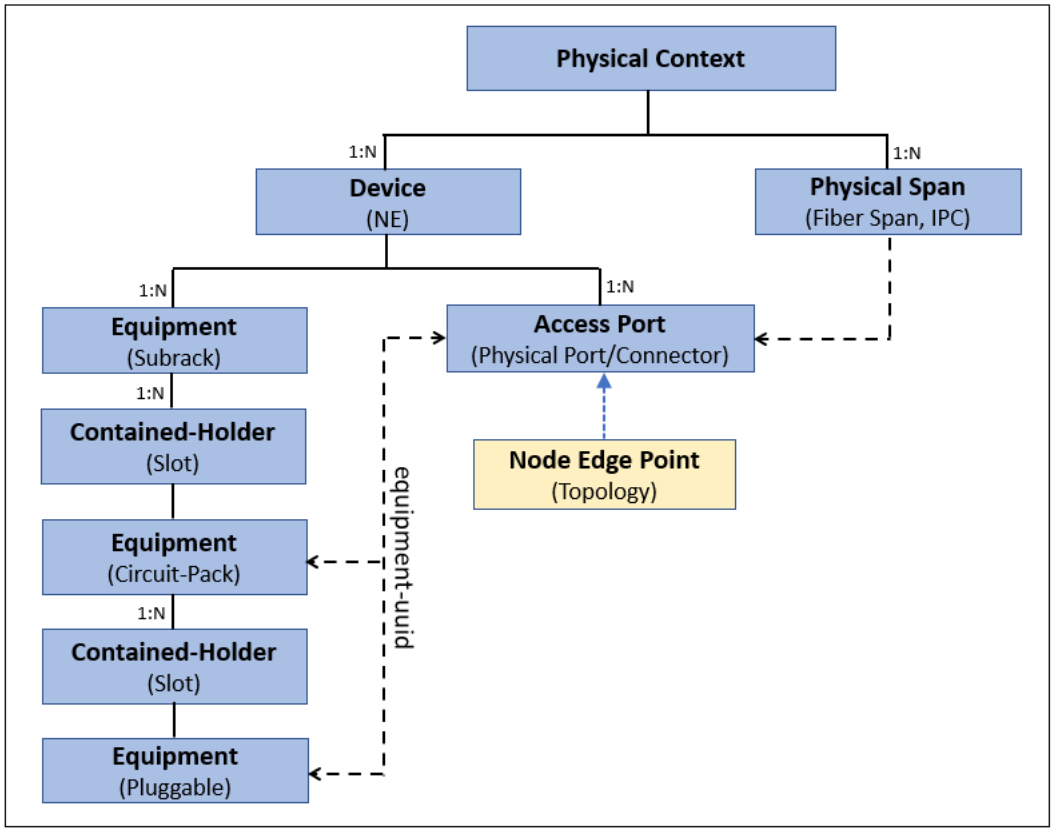

Figure 8 – TAPI Physical Context Hierarchy

TAPI Device

A device represents the logical grouping of Equipments and AccessPorts that are closely located and form a support a coherent system of related functions. Each physical device is represented as a TAPI device object.

The model of the device object is given in the below table.

Table 43 – TAPI device object definition

Attribute	Allowed Values/Format	Mode	Support in CONC TAPI NBI	Notes

equipment	List of {equipment}	RO	Y	Provides the list of equipments within the device All equipments configured/ available in the device platform - regardless of whether it is actually installed or not - shall be reported. Provided by tapi-server See Table 44 – TAPI equipment object definition
access-port	List of {access-port}	RO	Y	Provides the list of Access ports within the device. Access port represents a group a pins or connector on an equipment that together support a signal group/flow. It corresponds to the physical ports within the device. Provided by tapi-server See Table 48 – TAPI access-port object definition
uuid	"[0-9a-fA-F]{8}[0-9a-fA-F]{4}[0-9a-fA-F]{12}"	RO	Y	Indicates an identifier that is universally unique within an identifier space (as per RFC 4122) UUID for the device object Provided by tapi-server

name	List of {value-name, value} • “value-name”: ”GATEWAY”, “value”: “[0-9a-zA-Z_]{64}” • “value-name”: ”IP”, “value”: {IP Address} • “value-name”: ”MASK”, “value”: “[0-9a-zA-Z_]{64}” • “value-name”: ”NE_ID”, “value”: “[0-9a-zA-Z_]{64}” • “value-name”: ”NE_NAME”, “value”: “[0-9a-zA-Z_]{64}” • “value-name”: ”NE_TYPE”, “value”: “[0-9a-zA-Z_]{64}”	RO	Y	Provides name-value pairs related to the device object Provided by tapi-server

In CONC TAPI NBI, TAPI device object is modelled corresponding to each physical device in the site.

TAPI Equipment

The equipment represents a physical thing within the device. An equipment can be either field replaceable or non-field replaceable.

The model of equipment object is given in the below table.

Table 44 – TAPI equipment object definition

Attribute	Allowed Values/Format	Mode	Support in CONC TAPI NBI	Notes

contained-holder	List of {contained-holder}	RO	Y	References holders within an Equipment that is available to take other (child) Equipments. The holders are listed based on the equipment that is expected/configured. • For a SUBRACK Equipment, it is the slots available to take CIRCUIT_PACK equipments. • For a CIRCUIT_PACK Equipment, it is the slots available to take SMALL_FORMFACTOR_PLUGGABLE equipments. • Not applicable for SMALL_FORMFACTOR_PLUGGABLE equipments, as they do not contain any holders within it. Provided by tapi-server See Table 45 – TAPI holder object definition
category	["EQUIPMENT_CATEGORY_SUBRACK", "EQUIPMENT_CATEGORY_ CIRCUIT_PACK", "EQUIPMENT_CATEGORY_SMALL_FORMFACTOR_PLUGGABLE", "EQUIPMENT_CATEGORY_STAND_ ALONE_UNIT", "EQUIPMENT_CATEGORY_RACK"] Note: Only ["EQUIPMENT_CATEGORY_SUBRACK", "EQUIPMENT_CATEGORY_CIRCUIT_PACK", “EQUIPMENT_CATEGORY_SMALL_FORMFACTOR_PLUGGABLE”] are supported in CONC TAPI NBI	RO	Y	Indicates the category of the Equipment • SUBRACK refers to a configured Shelf or Chassis (Active/Passive chassis). In case of passive units, that sits directly on the rack or inside a mechanical frame, a virtual SUBRACK is created within TAPI. • CIRCUIT_PACK refers to a Card/Passive Unit configured within a SUBRACK • SMALL_ FORMFACTOR_PLUGGABLE refers to an SFP/XFP configured within a CIRCUIT_PACK Provided by tapi-server

equipment-location	String [occupying-slot-position]-[occupying-sub-slot-position]	RO	Y	Indicates the relative position of the equipment in the context of its containing equipment • For SUBRACK equipment, [occupying-slot-position] is the RU position, [occupying-sub-slot-position] is set to “0” • For CIRCUIT_PACK equipment, [occupying-slot-position] is the id of the slot within the SUB-RACK equipment holding this equipment, [occupying-sub-slot-position] is the id of the sub-slot within slot of the SUB-RACK equipment holding this equipment. If no sub-slot present, [sub-slot-position] is set to "0” • For SMALL_ FORMFACTOR_PLUGGABLE equipment, [occupying-slot-position] is the id of the slot within the CIRCUIT_PACK equipment holding this equipment, [occupying-sub-slot-position] is set to “0” Provided by tapi-server
geographical-location	String	RO	Y	Indicates the geographical location of this device Provided by tapi-server

is-expected-actual-mismatch	[“true”, “false”]	RO	Y	Indicates if there is a mismatch condition exists between the expected and actual equipment. • The value is “true” only if there is actual equipment installed and is different from the expected equipment • In all other cases, it is set to “false” Provided by tapi-server
expected-equipment	List of {expected-equipment}	RO	Y	Provides details of the equipment as expected/configured in the device platform Always contains exactly 1 item in the list as the equipment is always expected/configured Provided by tapi-server See Table 46 – TAPI expected-equipment object definition
actual-equipment	{actual-equipment}	RO	Y	Provides details of the equipment that is actually/physically installed on the device. It is applicable only when the equipment is actually/physically installed on the device. In other cases, it shall be absent or empty Provided by tapi-server See Table 47 – TAPI actual-equipment object definition

uuid	“[0-9a-fA-F]{8}[0-9a-fA-F]{4}[0-9a-fA-F]{12}”	RO	Y	Indicates an identifier that is universally unique within an identifier space (as per RFC 4122) UUID for the Equipment object Provided by tapi-server
name	List of {value-name, value} • “value-name”: ”EQUIP-MENT_NAME”, “value”: “[0-9a-zA-Z_]{64}”	RO	Y	Provides name-value pairs related to the Equipment object Provided by tapi-server

CONC TAPI NBI models the following types of Equipments:

- Chassis/Shelf (Active/Passive) and Virtual Chassis for passive units on Rack [category: "EQUIPMENT_CATEGORY_SUBRACK"]
- Cards/Passive Units [category: "EQUIPMENT_CATEGORY_CIRCUIT_PACK”]
- Pluggables [category: “EQUIPMENT_CATEGORY_SMALL_ FORMFACTOR_PLUGGABLE”]

Note: CONC TAPI NBI do not model Rack as an equipment.

In case of passive units, each passive unit is modelled as a card (CIRCUIT_PACK) and CONC NBI models a virtual shelf (SUBRACK) to hold the passive unit cards. The life cycle of the virtual-shelf is aligned to that of the contained passive units. The virtual-shelf is created to hold all passive units placed at the same rack-position (the passive unit could be placed directly on the rack at a given rack-position or through a mechanical frame placed at a given rack-position that can hold multiple passives within its slots). The virtual-shelf is created when the first passive unit is created at a given rack-position and is deleted when the last passive unit at the rack-position is deleted. The expected and actual state of the virtual chassis is also aligned with that of its contained passives.

The model of the holder object is provided in the below table.

Table 45 – TAPI holder object definition

Attribute	Allowed Values/Format	Mode	Support in CONC TAPI NBI	Notes

occupying-fru	{device-uuid, equipment-uuid}	RO	Y	References the child equipment that is configured to occupy the contained holder of the equipment. The attribute is present only when a child equipment is configured on the holder of the equipment. Otherwise, it will be absent or empty. • For the holder of a SUBRACK equipment, it references to the CIRCUIT_PACK equipment that is configured to occupy the holder • For the holder of a CIRCUIT_PACK equipment, it references to the SMALL_ FORMFAC-TOR_PLUGGABLE equipment that is configured to occupy the holder • Not applicable for SMALL_FORMFACTOR_PLUGGABLE equipments as they do not have any contained holders Provided by tapi-server
expected-holder:	"common-holder-properties": {holder-category, is-guided, holder-location}	RO	Y	Provides the expected state of this holder as per the expected/configured equipment containing the holder. Always present as the containing equipment is always expected/configured Provided by tapi-server
expected-holder: common-holder-properties: holder-category	[“HOLDER_CATEGORY_SLOT”]	RO	Y	Refers to the category of the holder Provided by tapi-server
expected-holder: common-holder-properties: is-guided	[“true”, “false”]	RO	Y	Indicates whether the holder has guides that constrain the position of the equipment in the holder or not Provided by tapi-server

expected-holder: common-holder-properties: holder-location	String [slot-position]-[sub-slot-position]	RO	Y	Indicates the relative position of the holder in the context of its containing equipment along with the position of that containing Equipment • For the holder of a SUBRACK or CIRCUIT_PACK equipment, [slot-position] is the id of the slot corresponds to the holder, [sub-slot-position] is the id of the sub-slot within the slot corresponds to the holder. If no sub-slot present, [sub-slot-position] is set to “0” • Not applicable for SMALL_FORMFACTOR_PLUGGABLE equipments as they do not have any contained holders Provided by tapi-server
actual-holder:	"common-holder-properties": {holder-category, is-guided, holder-location}	RO	Y	Provides the actual/installed state of this holder as per the actual/installed equipment containing the holder. • It is applicable only when the containing equipment is actually/physically installed on the device. • In other cases, it shall be absent or empty Provided by tapi-server
actual-holder: common-holder-properties: holder-category	[“HOLDER_CATEGORY_SLOT”]	RO	Y	Refers to the category of the holder Provided by tapi-server
actual-holder: common-holder-properties: is-guided	[“true”, “false”]	RO	Y	Indicates whether the holder has guides that constrain the position of the equipment in the holder or not Provided by tapi-server

actual-holder: common-holder-properties: holder-location	String [slot-position]-[sub-slot-position]	RO	Y	Indicates the relative position of the holder in the context of its containing equipment along with the position of that containing Equipment • For the holder of a SUBRACK or CIRCUIT_PACK equipment, [slot-position] is the id of the slot corre-sponds to the holder, [sub-slot-position] is the id of the sub-slot within the slot corresponds to the holder. If no sub-slot present, [sub-slot-position] is set to "0" • Not applicable for SMALL_FORMFACTOR_PLUGGABLE equipments as they do not have any contained holders Provided by tapi-server
uuid	"[0-9a-fA-F]{8}[0-9a-fA-F]{4}[0-9a-fA-F]{12}"	RO	Y	Indicates an identifier that is universally unique within an identifier space (as per RFC 4122) UUID for the Holder object Provided by tapi-server
name	List of {value-name, value} • "value-name": "HOLD-ER_NAME", "value": "[0-9a-zA-Z_]{64}"	RO	Y	Provides name-value pairs related to the Holder object Provided by tapi-server

When a CIRCUIT_PACK Equipment (e.g., a passive unit) contains a slot to take child CIRCUIT_PACK Equipments (e.g., inner passive units within the main passive unit), the child slot will be modelled as a sub-slot within the slot of the SUBRACK Equipment (e.g. the chassis) where the main CIRCUIT_PACK Equipment is occupied. The child CIRCUIT_PACK Equipment occupies the contained-holder corresponding to this sub-slot.

The model of expected-equipment object is provided in the table below.

Table 46 – TAPI expected-equipment object definition

Attribute	Allowed Values/Format	Mode	Support in CONC TAPI NBI	Notes

expected-non-field-replaceable-module:	List of {“common-equipment-properties”: {asset-type-identifier, equipment-type-description, equipment-type-identifier, equipment-type-name, equipment-type-version, manufacturer-identifier, manufacturer-name}}	RO	N	Represents list of expected equipments that cannot be replaced in the field (non-FRU). It is a subordinate part of an expected equipment (FRU)
expected-non-field-replaceable-module: common-equipment-properties: asset-type-identifier	String	RO	N	Represents the invariant properties of the equipment asset allocated by the operator that define and characterize the type
expected-non-field-replaceable-module: common-equipment-properties: equipment-type-description	String	RO	N	Describes the type of the equipment
expected-non-field-replaceable-module: common-equipment-properties: equipment-type-identifier	String	RO	N	Indicates the part type of the equipment
expected-non-field-replaceable-module: common-equipment-properties: equipment-type-name	String	RO	N	Indicates the type of the equipment
expected-non-field-replaceable-module: common-equipment-properties: equipment-type-version	String	RO	N	Indicates the version of the equipment

expected-non-field-replaceable-module: common-equipment-properties: manufacturer-identifier	String	RO	N	Indicates the formal unique identifier of the equipment manufacturer.
expected-non-field-replaceable-module: common-equipment-properties: manufacturer-name	String	RO	N	Indicates the formal name of the equipment manufacturer.
expected-holder:	List of {"common-holder-properties": {holder-category, is-guided, holder-location}}	RO	Y	Indicates the list of holders expected within the expected equipment Provided by tapi-server
expected-holder: common-holder-properties: holder-category	[“HOLDER_CATEGORY_SLOT”]	RO	Y	Refers to the category of the holder Provided by tapi-server
expected-holder: common-holder-properties: is-guided	[“true”, “false”]	RO	Y	Indicates whether the holder has guides that constrain the position of the equipment in the holder or not Provided by tapi-server
expected-holder: common-holder-properties: holder-location	String [slot-position]-[sub-slot-position]	RO	Y	Indicates the relative position of the holder in the context of its containing equipment along with the position of that containing Equipment • For the holder of a SUBRACK or CIRCUIT_PACK equipment, [slot-position] is the id of the slot corresponds to the holder, [sub-slot-position] is the id of the sub-slot within the slot corresponds to the holder. If no sub-slot present, [sub-slot-position] is set to “0” • Not applicable for SMALL_FORMFACTOR_PLUGGABLE equipments as they do not have any contained holders Provided by tapi-server

common-equipment-properties:	{asset-type-identifier, equipment-type-description, equipment-type-identifier, equipment-type-name, equipment-type-version, manufacturer-identifier, manufacturer-name}	RO	Y	Provides a set of common properties of the expected equipment Provided by tapi-server
common-equipment-properties: asset-type-identifier	String	RO	N	Represents the invariant properties of the equipment asset allocated by the operator that define and characterize the type
common-equipment-properties: equipment-type-description	String	RO	Y	Describes the type of the equipment Provided by tapi-server
common-equipment-properties: equipment-type-identifier	String	RO	N	Indicates the part type of the equipment
common-equipment-properties: equipment-type-name	String	RO	Y	Indicates the type of the equipment Provided by tapi-server
common-equipment-properties: equipment-type-version	String	RO	N	Indicates the version of the equipment
common-equipment-properties: manufacturer-identifier	String	RO	Y	Indicates the formal unique identifier of the equipment manufacturer. Provided by tapi-server
common-equipment-properties: manufacturer-name	String	RO	Y	Indicates the formal name of the equipment manufacturer. Provided by tapi-server

The model of actual-equipment object is provided in the table below.

Table 47 – TAPI actual-equipment object definition

Attribute	Allowed Values/Format	Mode	Support in CONC TAPI NBI	Notes
actual-non-field-replaceable-module:	List of {common-actual-properties, common-equipment-properties}	RO	N	Represents list of actual/installed equipments that cannot be replaced in the field (non-FRU). It is a subordinate part of an actual/physical equipment (FRU)
actual-non-field-replaceable-module: common-actual-properties:	{asset-instance-identifier, is-powered, manufacture-date, serial-number, temperature}	RO	N	Provides a set of common actual properties of the actual/installed non-FRU equipment
actual-non-field-replaceable-module: common-actual-properties: asset-instance-identifier	String	RO	N	Indicates the asset identifier of this instance from the manufacturer's perspective
actual-non-field-replaceable-module: common-actual-properties: is-powered	["true", "false"]	RO	N	Indicates the state of the power being supplied to the equipment. This attribute summarizes the power state.
actual-non-field-replaceable-module: common-actual-properties: manufacture-date	date-and-time	RO	N	Indicates the date on which this equipment instance is manufactured.
actual-non-field-replaceable-module: common-actual-properties: serial-number	String	RO	N	Indicates the serial number of this equipment instance.
actual-non-field-replaceable-module: common-actual-properties: temperature	Decimal64	RO	N	Indicates the measured temperature of this equipment instance
actual-non-field-replaceable-module: common-equipment-properties:	{asset-type-identifier, equipment-type-description, equipment-type-identifier, equipment-type-name, equipment-type-version, manufacturer-identifier, manufacturer-name}	RO	N	Provides a set of common properties of the actual/installed non-FRU equipment

actual-non-field-replaceable-module: common-equipment-properties: asset-type-identifier	String	RO	N	Represents the invariant properties of the equipment asset allocated by the operator that define and characterize the type
actual-non-field-replaceable-module: common-equipment-properties: equipment-type-description	String	RO	N	Describes the type of the equipment
actual-non-field-replaceable-module: common-equipment-properties: equipment-type-identifier	String	RO	N	Indicates the part type of the equipment
actual-non-field-replaceable-module: common-equipment-properties: equipment-type-name	String	RO	N	Indicates the type of the equipment
actual-non-field-replaceable-module: common-equipment-properties: equipment-type-version	String	RO	N	Indicates the version of the equipment
actual-non-field-replaceable-module: common-equipment-properties: manufacturer-identifier	String	RO	N	Indicates the formal unique identifier of the equipment manufacturer
actual-non-field-replaceable-module: common-equipment-properties: manufacturer-name	String	RO	N	Indicates the formal name of the equipment manufacturer.
common-actual-properties:	{asset-instance-identifier, is-powered, manufacture-date, serial-number, temperature}	RO	Y	Provides a set of common actual properties of the actual/installed equipment Provided by tapi-server
common-actual-properties: asset-instance-identifier	String	RO	N	Indicates the asset identifier of this instance from the manufacturer's perspective

common-actual-properties: is-powered	["true", "false"]	RO	Y	Indicates the state of the power being supplied to the equipment. This attribute summarizes the power state. Provided by tapi-server
common-actual-properties: manufacture-date	date-and-time	RO	N	Indicates the date on which this equipment instance is manufactured.
common-actual-properties: serial-number	String	RO	Y	Indicates the serial number of this equipment instance Provided by tapi-server
common-actual-properties: temperature	Decimal64	RO	Y	Indicates the measured temperature of this equipment instance Provided by tapi-server
common-equipment-properties:	{asset-type-identifier, equipment-type-description, equipment-type-identifier, equipment-type-name, equipment-type-version, manufacturer-identifier, manufacturer-name}	RO	Y	Provides a set of common properties of the actual/installed equipment Provided by tapi-server
common-equipment-properties: asset-type-identifier	String	RO	N	Represents the invariant properties of the equipment asset allocated by the operator that define and characterize the type
common-equipment-properties: equipment-type-description	String	RO	Y	Describes the type of the equipment Provided by tapi-server
common-equipment-properties: equipment-type-identifier	String	RO	Y	Indicates the part type of the equipment Provided by tapi-server
common-equipment-properties: equipment-type-name	String	RO	Y	Indicates the type of the equipment Provided by tapi-server

common-equipment-properties: equipment-type-version	String	RO	Y	Indicates the version of the equipment Provided by tapi-server
common-equipment-properties: manufacturer-identifier	String	RO	Y	Indicates the formal unique identifier of the equipment manufacturer. Provided by tapi-server
common-equipment-properties: manufacturer-name	String	RO	Y	Indicates the formal name of the equipment manufacturer. Provided by tapi-server

TAPI Access Port

Access port is defined as a group of connectors/pins that together support a signal group/flow. The access-port is the reference with the logical model (tapi-topology). One of the parameters of access-port is "equipment-uuid" which acts as the bridge between the logical model (NEPs etc.) and the Physical Model.

The model of Access Port is given in the table below.

Table 48 – TAPI access-port object definition

Attribute	Allowed Values/Format	Mode	Support in CONC TAPI NBI	Notes

connector-pin:	List of {connector-identification, pin-identification, equipment-uuid, pin-and-role}	RO	Y	Provides the list of Connector/Pins that support the AccessPort • For Access Port corre-sponds to 2 unidirectional physical ports supporting Tx and Rx signal flows, the list contains 2 con-nector-pin items – one for the Tx and one for the Rx direction • For Access Port corre-sponds to a bidirectional physical port supporting both Tx and Rx signal flows, the list contains 1 connector-pin item for the combined Tx and Rx directions Provided by tapi-server
connector-pin: connector-identification	String	RO	Y	Identifies the Connector in the context of the referenced Equipment It is set to the id of the physical port that corresponds to the connector-pin Provided by tapi-server
connector-pin: pin-identification	String	RO	Y	Identifies the Pin in the context of the connector. It is set to the id of the physical port that corresponds to the connector-pin Provided by tapi-server

connector-pin: equipment-uuid	uuid	RO	Y	References the Equipment that is fitted with the Connector/Pin • For Access Ports corre-sponds to Physical Ports contained within SFP/XFP modules, it refers to the corresponding SMALL_FORMFACTOR_PLUGGABLE equipment. • If there is no SFP/XFP module for the physical port, then it refers to CIRCUIT_PACK equip-ment that contains the physical port. Provided by tapi-server
connector-pin: pin-and-role:	List of {location-in-connector, pin-role, pin-name}	RO	N	Identifies the pin and its role. It is used when there is more than one pin used in a connector and/or there is a need to identify the role of one or more pins
connector-pin: pin-and-role: location-in-connector	String	RO	N	Indicates the named location of the pin in the context of the connector
connector-pin: pin-and-role: pin-role	String	RO	N	Indicates the role of the pin
connector-pin: pin-and-role: pin-name	String	RO	N	Indicates the name of the pin
uuid	"[0-9a-fA-F]{8}[0-9a-fA-F]{4}[0-9a-fA-F]{12}"	RO	Y	Indicates an identifier that is universally unique within an identifier space (as per RFC 4122) UUID for the Access Port object Provided by tapi-server
name	List of {value-name, value} • "value-name": " PORT_NUMBER", "value": "[0-9a-zA-Z_]{64}"	RO	Y	Provides name-value pairs related to the Access Port object Provided by tapi-server

In CONC TAPI NBI, Access Ports are modelled corresponding to Physical Ports within the cards/passives.

TAPI Physical Span

The Physical Span represents the adjacency between Access Ports. The adjacency is supported by a group of strands between pins of the AccessPorts.

The model of the physical-span object is given in the table below.

Table 49 – TAPI physical-span object definition

Attribute	Allowed Values/Format	Mode	Support in CONC TAPI NBI	Notes
access-port	List of {device-uuid, access-port-uuid}	RO	Y	References the Access Ports that are the ends of the physical span Provided by tapi-server

abstract-strand	List of {abstract-strand}	RO	Y	Represents both the serial segments that form an end-end strand and the parallel end-end strands • For Physical-Span spans between Access Ports having 2 Connector/Pins each (one for Tx and one for Rx directions) the list contains 2 abstract-strands – one connecting the Tx Connector/Pin of the AccessPort at one-end with Rx Connector/Pin of the AccessPort at the other-end and one connecting the Rx Connector/Pin of the AccessPort at one-end with Tx Connector/Pin of the AccessPort at the other-end • For Physical-Span spans between Access Ports having 1 Connector/Pin each (for the combined Tx and Rx directions) the list contains 1 abstract-strands connecting the Tx/Rx Connector/Pin of the AccessPort at one-end with Tx/Rx Connector/Pin of the AccessPort at the other-end Provided by tapi-server See Table 50 – TAPI abstract-strand object definition
uuid	“[0-9a-fA-F]{8}[0-9a-fA-F]{4}[0-9a-fA-F]{12}”	RO	Y	Indicates an identifier that is universally unique within an identifier space (as per RFC 4122) UUID for the Physical Span object Provided by tapi-server

name	List of {value-name, value} • “value-name”: ”PHYSI-CAL_SPAN_NAME”, “value”: “[0-9a-zA-Z_]{64}”	RO	Y	Provides name-value pairs related to the Physical Span object Provided by tapi-server

In CONC TAPI NBI, the following entities are modeled as Physical-Spans:

- Fiber Spans
- Internal Patch Cords (IPC)

The model of the abstract-strand object is given in the below table.

Table 50 – TAPI abstract-strand object definition

Attribute	Allowed Values/Format	Mode	Support in CONC TAPI NBI	Notes
adjacent-strand	List of {physical-span-uuid, abstract-strand-local-id}	RO	N	References the abstract-strands that are parallel end-end strands to this abstract-strand
spliced-strand	List of {physical-span-uuid, abstract-strand-local-id}	RO	N	References the abstract-strands that are serial segments that form an end-end strand.
connector-pin:	List of {connector-identification, pin-identification, equipment-uuid, pin-and-role}	RO	Y	Indicates list of Connector/Pins on the Access Port that supports the abstract strand on each end. It always contains 2 items • For unidirectional strand, one item refers to the Tx Connector/Pin of the Access-port at one-end while the second item refers to the Rx Connector/Pin of the Access-port at the other-end. • For bidirectional strand, one item refers to the combined Tx/Rx Con-nector/Pin of the Access-port at one-end while the second item re-fers to the combined Tx/Rx Con-nector/Pin of the Access-port at the other-end. Provided by tapi-server

connector-pin: connector-identification	String	RO	Y	Identifies the Connector in the context of the referenced Equipment It is set to the id of the physical port that corresponds to the connector-pin Provided by tapi-server
connector-pin: pin-identification	String	RO	Y	Identifies the Pin in the context of the connector. It is set to the id of the physical port that corresponds to the connector-pin Provided by tapi-server
connector-pin: equipment-uuid	uuid	RO	Y	References the Equipment that is fitted with the Connector/Pin • For Access Ports corresponds to Physical Ports contained within SFP/XFP modules, it refers to the corresponding SMALL_FORMFACTOR_PLUGGABLE equipment. • If there is no SFP/XFP module for the physical port, then it refers to CIRCUIT_PACK equipment that contains the physical port. Provided by tapi-server
connector-pin: pin-and-role:	List of {location-in-connector, pin-role, pin-name}	RO	N	Identifies the pin and its role. It is used when there is more than one pin used in a connector and/or there is a need to identify the role of one or more pins
connector-pin: pin-and-role: location-in-connector	String	RO	N	Indicates the named location of the pin in the context of the connector
connector-pin: pin-and-role: pin-role	String	RO	N	Indicates the role of the pin
connector-pin: pin-and-role: pin-name	String	RO	N	Indicates the name of the pin

strand-media-characteristics	List of {value-name, value} • “value-name”: ”Fiber-Length”, “value”: “[0-9a-zA-Z_]{64}” • “value-name”: ”Fiber-Type”, “value”: “[0-9a-zA-Z_]{64}” • “value-name”: ”PMD”, “value”: “[0-9a-zA-Z_]{64}”	RO	Y	Provides name-value pairs related to the characteristics of the strand media Provided by tapi-server
local-id	"[0-9a-zA-Z_]{32}"	RO	Y	Indicates an identifier that is unique within the list of abstract-strands Provided by tapi-server
name	List of {value-name, value} • “value-name”: ”STRAND_NAME”, “value”: “[0-9a-zA-Z_]{64}”	RO	Y	Provides name-value pairs related to the abstract-strand object Provided by tapi-server

Appendix

Sample TAPI Model Data

Note: The sample data is provided only to illustrate the attributes of various TAPI objects. The full model hierarchy and relationship/cross-references between model objects are not maintained in the sample.


```
{
  "tapi-common:context": {
    "service-interface-point": [
      {
        "uuid": "001b47c2-5d51-3681-ac6a-86775fd4cb7e",
        "layer-protocol-name": "PHOTONIC_MEDIA",
        "supported-layer-protocol-qualifier": ["tapi-photonic-media:PHOTONIC_LAYER_QUALIFIER_MC"],
        "direction": "BIDIRECTIONAL",
        "name": [
          {
            "value-name": "INVENTORY_ID",
            "value": "/ne=ROADM_Site10/r=1/sh=2004/sl=1/s_sl=0/p=19,20"
          },
          {
            "value-name": "SIP_NAME",
            "value": "ROADM_Site10-nep-3/CHAN 10 (1535.82)-sip"
          }
        ],
        "administrative-state": "UNLOCKED",
        "operational-state": "DISABLED",
        "lifecycle-state": "INSTALLED",
        "total-potential-capacity": {
          "total-size": {
            "value": "0",
            "unit": "GHz"
          }
        },
        "available-capacity": {
          "total-size": {
            "value": "0",
            "unit": "GHz"
          }
        }
      }
    ],
    "uuid": "fe22e968-47cf-3ecd-8563-017271b17b34",
    "tapi-connectivity:connectivity-context": {
      "connectivity-service": [
        {
          "uuid": "3c312bd2-60c8-33b0-b8b7-630de83a688f",
          "end-point": [
            {
              "local-id": "endpoint1_mc",
              "layer-protocol-name": "PHOTONIC_MEDIA",
              "layer-protocol-qualifier": "tapi-photonic-media:PHOTONIC_LAYER_QUALIFIER_MC",
              "service-interface-point": {
                "service-interface-point-uuid": "b1019361-592d-328a-a8d7-efb11438b8e8"
              },
              "connection-end-point": [
                {
                  "topology-uuid": "4b1b5fac-a97f-32bc-af8a-7fd5cec82ad7",
                  "node-uuid": "3550ea76-a8b6-3276-9bea-2f1380bab80a",
                  "node-edge-point-uuid": "4e4c9427-4713-39b5-9fa3-e1b6f0482656",
```

```
            "connection-end-point-uuid": "86f166c8-a9d9-3a09-82af-08741e562346"
          }
        ],
        "direction": "BIDIRECTIONAL",
        "role": "SYMMETRIC",
        "protection-role": "NA",
        "name": [
          {
            "value-name": "CONN_SERVICE_END_POINT_NAME",
            "value": "endpoint1_mc"
          }
        ],
        "administrative-state": "UNLOCKED",
        "operational-state": "DISABLED",
        "lifecycle-state": "INSTALLED",
        "tapi-photonic-media:mca-connectivity-service-end-point-spec": {
          "mc-config": [
            {
              "local-id": "endpoint1_mc",
              "name": [
                {
                  "value-name": "CSEP_MC_NAME",
                  "value": "endpoint1_mca_csep"
                }
              ]
            }
          ],
          "number-of-mc": "1"
        }
      },
      {
        "local-id": "endpoint1_otsiMc",
        "layer-protocol-name": "PHOTONIC_MEDIA",
        "layer-protocol-qualifier": "tapi-photonic-media:PHOTONIC_LAYER_QUALIFIER_OTSiMC",
        "service-interface-point": {
          "service-interface-point-uuid": "b1019361-592d-328a-a8d7-efb11438b8e8"
        },
        "connection-end-point": [
          {
            "topology-uuid": "4b1b5fac-a97f-32bc-af8a-7fd5cec82ad7",
            "node-uuid": "3550ea76-a8b6-3276-9bea-2f1380bab80a",
            "node-edge-point-uuid": "3cce5844-7080-3f73-b2c9-c3bef699df27",
            "connection-end-point-uuid": "e187d4a5-8817-36e6-8489-453bddf20c90"
          }
        ],
        "direction": "BIDIRECTIONAL",
        "role": "SYMMETRIC",
        "protection-role": "NA",
        "server-connectivity-service-end-point": {
          "connectivity-service-uuid": "3c312bd2-60c8-33b0-b8b7-630de83a688f",
          "connectivity-service-end-point-local-id": "endpoint1_mc"
        },
        "name": [
          {
            "value-name": "CONN_SERVICE_END_POINT_NAME",
            "value": "endpoint1_otsiMc"
          }
        ],
        "administrative-state": "UNLOCKED",
        "operational-state": "DISABLED",
        "lifecycle-state": "INSTALLED",
        "tapi-photonic-media:otsia-connectivity-service-end-point-spec": {
          "otsi-config": [
            {
```

```
            "local-id": "endpoint1_otsiMcotsia",
            "central-frequency": {
              "central-frequency": "191356250"
            }
          }
        ],
        "number-of-otsi": "1"
      },
      "tapi-photonic-media:mca-connectivity-service-end-point-spec": {
        "mc-config": [
          {
            "local-id": "endpoint1_otsiMc",
            "name": [
              {
                "value-name": "CSEP_OTSI_MC_NAME",
                "value": "endpoint2_otsia_mca"
              }
            ]
          }
        ],
        "number-of-mc": "1"
      }
    },
    {
      "local-id": "endpoint2_mc",
      "layer-protocol-name": "PHOTONIC_MEDIA",
      "layer-protocol-qualifier": "tapi-photonic-media:PHOTONIC_LAYER_QUALIFIER_MC",
      "service-interface-point": {
        "service-interface-point-uuid": "a3eb7321-4872-392e-b3ec-2a6dd79eff37"
      },
      "connection-end-point": [
        {
          "topology-uuid": "4b1b5fac-a97f-32bc-af8a-7fd5cec82ad7",
          "node-uuid": "01ac5a9f-c08b-325e-b8e5-63f3b69d7cdb",
          "node-edge-point-uuid": "8a9f7fab-689e-302c-8012-edd2cd096ae9",
          "connection-end-point-uuid": "00a3492a-1969-382d-9598-97567d8520e4"
        }
      ],
      "direction": "BIDIRECTIONAL",
      "role": "SYMMETRIC",
      "protection-role": "NA",
      "name": [
        {
          "value-name": "CONN_SERVICE_END_POINT_NAME",
          "value": "endpoint2_mc"
        }
      ],
      "administrative-state": "UNLOCKED",
      "operational-state": "ENABLED",
      "lifecycle-state": "INSTALLED",
      "tapi-photonic-media:mca-connectivity-service-end-point-spec": {
        "mc-config": [
          {
            "local-id": "endpoint2_mc",
            "name": [
              {
                "value-name": "CSEP_MC_NAME",
                "value": "endpoint3_mca_csep"
              }
            ]
          }
        ],
        "number-of-mc": "1"
```

```
            }
          },
          {
            "local-id": "endpoint2_otsiMc",
            "layer-protocol-name": "PHOTONIC_MEDIA",
            "layer-protocol-qualifier": "tapi-photonic-media:PHOTONIC_LAYER_QUALIFIER_OTSiMC",
            "service-interface-point": {
              "service-interface-point-uuid": "a3eb7321-4872-392e-b3ec-2a6dd79eff37"
            },
            "connection-end-point": [
              {
                "topology-uuid": "4b1b5fac-a97f-32bc-af8a-7fd5cec82ad7",
                "node-uuid": "01ac5a9f-c08b-325e-b8e5-63f3b69d7cdb",
                "node-edge-point-uuid": "e1faddc5-ad77-3e8d-94c2-72641807086f",
                "connection-end-point-uuid": "56f9f2b5-cbb5-3277-af0a-ad955b92e741"
              }
            ],
            "direction": "BIDIRECTIONAL",
            "role": "SYMMETRIC",
            "protection-role": "NA",
            "server-connectivity-service-end-point": {
              "connectivity-service-uuid": "3c312bd2-60c8-33b0-b8b7-630de83a688f",
              "connectivity-service-end-point-local-id": "endpoint2_mc"
            },
            "name": [
              {
                "value-name": "CONN_SERVICE_END_POINT_NAME",
                "value": "endpoint2_otsiMc"
              }
            ],
            "administrative-state": "UNLOCKED",
            "operational-state": "ENABLED",
            "lifecycle-state": "INSTALLED",
            "tapi-photonic-media:otsia-connectivity-service-end-point-spec": {
              "otsi-config": [
                {
                  "local-id": "endpoint2_otsiMcotsia",
                  "central-frequency": {
                    "central-frequency": "191356250"
                  }
                }
              ],
              "number-of-otsi": "1"
            },
            "tapi-photonic-media:mca-connectivity-service-end-point-spec": {
              "mc-config": [
                {
                  "local-id": "endpoint2_otsiMc",
                  "name": [
                    {
                      "value-name": "CSEP_OTSI_MC_NAME",
                      "value": "endpoint4_otsia_mca"
                    }
                  ]
                }
              ],
              "number-of-mc": "1"
            }
          }
        ],
        "connection": [
          {
            "connection-uuid": "c52a6d4e-ce5d-3adf-951f-da50e73ae40d"
          },
```

```
        {
          "connection-uuid": "dc858592-4933-3b60-93d6-f6ec532b5fe4"
        }
      ],
      "name": [
        {
          "value-name": "SERVICE_NAME",
          "value": "onc-ROADM_Site9-ROADM_Site10-1"
        }
      ],
      "service-layer": "PHOTONIC_MEDIA",
      "service-type": "POINT_TO_POINT_CONNECTIVITY",
      "requested-capacity": {
        "total-size": {
          "unit": "GHz"
        }
      },
      "connectivity-direction": "BIDIRECTIONAL",
      "cost-characteristic": [
        {
          "cost-name": "HOP"
        },
        {
          "cost-name": "LENGTH"
        },
        {
          "cost-name": "NOISE"
        }
      ],
      "risk-diversity-characteristic": [
        {
          "risk-characteristic-name": "SRLG",
          "risk-identifier-list": ["risk-identifier"]
        }
      ],
      "preferred-transport-layer": ["PHOTONIC_MEDIA"],
      "resilience-type": {
        "restoration-policy": "NA",
        "protection-type": "NO_PROTECTON"
      },
      "reversion-mode": "NON-REVERTIVE",
      "preferred-restoration-layer": ["PHOTONIC_MEDIA"],
      "administrative-state": "UNLOCKED",
      "operational-state": "DISABLED",
      "lifecycle-state": "INSTALLED"
    }
  ],
  "connection": [
    {
      "uuid": "dc858592-4933-3b60-93d6-f6ec532b5fe4",
      "connection-end-point": [
        {
          "topology-uuid": "4b1b5fac-a97f-32bc-af8a-7fd5cec82ad7",
          "node-uuid": "01ac5a9f-c08b-325e-b8e5-63f3b69d7cdb",
          "node-edge-point-uuid": "e1faddc5-ad77-3e8d-94c2-72641807086f",
          "connection-end-point-uuid": "56f9f2b5-cbb5-3277-af0a-ad955b92e741"
        },
        {
          "topology-uuid": "4b1b5fac-a97f-32bc-af8a-7fd5cec82ad7",
          "node-uuid": "3550ea76-a8b6-3276-9bea-2f1380bab80a",
          "node-edge-point-uuid": "3cce5844-7080-3f73-b2c9-c3bef699df27",
          "connection-end-point-uuid": "e187d4a5-8817-36e6-8489-453bddf20c90"
        }
```

```
        ],
        "lower-connection": [
          {
            "connection-uuid": "091c1ce7-003c-3cec-8e72-a1b077ad4b58"
          },
          {
            "connection-uuid": "610d5851-8a04-3426-a1f3-03ba384c6f73"
          },
          {
            "connection-uuid": "bd276a0e-0cac-3425-8352-acafdd1be207"
          },
          {
            "connection-uuid": "db3312e9-8fbb-3c3f-a05f-18a95b8a5092"
          }
        ],
        "route": [
          {
            "local-id": "Route_A",
            "connection-end-point": [
              {
                "topology-uuid": "4b1b5fac-a97f-32bc-af8a-7fd5cec82ad7",
                "node-uuid": "01ac5a9f-c08b-325e-b8e5-63f3b69d7cdb",
                "node-edge-point-uuid": "5c6bbda4-0430-3c72-8aac-41d5106d52e5",
                "connection-end-point-uuid": "af3fdb05-4542-351b-b426-d24b9c164606"
              },
              {
                "topology-uuid": "4b1b5fac-a97f-32bc-af8a-7fd5cec82ad7",
                "node-uuid": "01ac5a9f-c08b-325e-b8e5-63f3b69d7cdb",
                "node-edge-point-uuid": "e1faddc5-ad77-3e8d-94c2-72641807086f",
                "connection-end-point-uuid": "56f9f2b5-cbb5-3277-af0a-ad955b92e741"
              },
              {
                "topology-uuid": "4b1b5fac-a97f-32bc-af8a-7fd5cec82ad7",
                "node-uuid": "3550ea76-a8b6-3276-9bea-2f1380bab80a",
                "node-edge-point-uuid": "28800947-a4e1-3b0f-a439-42c771cfa345",
                "connection-end-point-uuid": "a60c0b83-d6de-3450-a2e0-f96dc2d8a3e0"
              },
              {
                "topology-uuid": "4b1b5fac-a97f-32bc-af8a-7fd5cec82ad7",
                "node-uuid": "3550ea76-a8b6-3276-9bea-2f1380bab80a",
                "node-edge-point-uuid": "3cce5844-7080-3f73-b2c9-c3bef699df27",
                "connection-end-point-uuid": "e187d4a5-8817-36e6-8489-453bddf20c90"
              },
              {
                "topology-uuid": "4b1b5fac-a97f-32bc-af8a-7fd5cec82ad7",
                "node-uuid": "421ae51b-3adc-3a41-a18c-0e40a9ea9c35",
                "node-edge-point-uuid": "4f322d03-454b-3ba3-817b-44f7b4a91fe2",
                "connection-end-point-uuid": "8ffbf5f9-82fd-3471-9001-ddef75b0f207"
              },
              {
                "topology-uuid": "4b1b5fac-a97f-32bc-af8a-7fd5cec82ad7",
                "node-uuid": "421ae51b-3adc-3a41-a18c-0e40a9ea9c35",
                "node-edge-point-uuid": "e89d9c12-4a8f-373b-887a-9d98401b0dae",
                "connection-end-point-uuid": "3f56e62c-6d4d-31b9-b341-dcc53cf899ec"
              },
              {
                "topology-uuid": "4b1b5fac-a97f-32bc-af8a-7fd5cec82ad7",
                "node-uuid": "f8f2433a-f4b3-3789-b86e-07fe7d62f58b",
                "node-edge-point-uuid": "66da4d21-bf93-3b56-92a6-8d7e3784ba0e",
                "connection-end-point-uuid": "d662a82e-b42a-3346-b5da-f4f3428b7cb5"
              },
              {
                "topology-uuid": "4b1b5fac-a97f-32bc-af8a-7fd5cec82ad7",
                "node-uuid": "f8f2433a-f4b3-3789-b86e-07fe7d62f58b",
```

```
                "node-edge-point-uuid": "ea65979b-6012-391e-bf7d-de41a487a920",
                "connection-end-point-uuid": "87f9fe41-5a63-3c5f-b88a-cadf65400ed3"
              }
            ],
            "name": [
              {
                "value-name": "ROUTE_NAME",
                "value": "onc_ROADM_Site9_ROADM_Site10_1_OCH_CARRIER_Route_A"
              }
            ]
          }
        ],
        "name": [
          {
            "value-name": "CONNECTION_NAME",
            "value": "onc_ROADM_Site9_ROADM_Site10_1_OCH_CARRIER"
          }
        ],
        "operational-state": "DISABLED",
        "lifecycle-state": "INSTALLED"
      }
    ]
  },
  "tapi-equipment:physical-context": {
    "device": [
      {
        "uuid": "01ac5a9f-c08b-325e-b8e5-63f3b69d7cdb",
        "equipment": [
          {
            "uuid": "f41f39eb-fe91-326d-a6d5-67cb4ee35a3f",
            "category": "tapi-equipment:EQUIPMENT_CATEGORY_CIRCUIT_PACK",
            "equipment-location": "2-0",
            "is-expected-actual-mismatch": false,
            "expected-equipment": [
              {
                "common-equipment-properties": {
                  "equipment-type-description": "NCS2K-20-SMRFS",
                  "equipment-type-name": "NCS2K-20-SMRFS",
                  "manufacturer-name": "Cisco"
                }
              }
            ],
            "actual-equipment": {
              "common-actual-properties": {
                "is-powered": true,
                "serial-number": "doNotChangeMe"
              },
              "common-equipment-properties": {
                "equipment-type-description": "VIRTUAL-CARD=",
                "equipment-type-identifier": "NCS2K-20-SMR-FS",
                "equipment-type-name": "VIRTUAL-CARD=",
                "equipment-type-version": "FF",
                "manufacturer-name": "Cisco"
              }
            },
            "name": [
              {
                "value-name": "EQUIPMENT_NAME",
                "value": "CARD-2/NCS2K-20-SMRFS"
              }
            ]
          }
        ],
```

```
        "access-port": [
          {
            "uuid": "0651ae8c-37ae-34ef-aace-bdd9c9afb10d",
            "connector-pin": [
              {
                "connector-identification": "31",
                "pin-identification": "31",
                "equipment-uuid": "d3b0eb4d-8483-3425-a237-3399bc4c3b96"
              },
              {
                "connector-identification": "32",
                "pin-identification": "32",
                "equipment-uuid": "d3b0eb4d-8483-3425-a237-3399bc4c3b96"
              }
            ],
            "name": [
              {
                "value-name": "PORT_NUMBER",
                "value": "5/PORT-8"
              }
            ]
          }
        ],
        "name": [
          {
            "value-name": "GATEWAY",
            "value": ""
          },
          {
            "value-name": "IP",
            "value": "10.58.252.194"
          },
          {
            "value-name": "MASK",
            "value": ""
          },
          {
            "value-name": "NE_ID",
            "value": "01ac5a9f-c08b-325e-b8e5-63f3b69d7cdb"
          },
          {
            "value-name": "NE_NAME",
            "value": "ROADM_Site10"
          },
          {
            "value-name": "NE_TYPE",
            "value": "roadm"
          }
        ]
      }
    ],
    "physical-span": [
      {
        "uuid": "0039e64b-c1ed-3794-ae3e-c08f0a5ba22b",
        "access-port": [
          {
            "device-uuid": "f8f2433a-f4b3-3789-b86e-07fe7d62f58b",
            "access-port-uuid": "719e73f3-b9fc-3d97-bf64-63b097d89e46"
          },
          {
            "device-uuid": "f8f2433a-f4b3-3789-b86e-07fe7d62f58b",
            "access-port-uuid": "b8b9a205-03eb-38fc-a9dc-6531f620bcdd"
          }
        ],
```

```
        "abstract-strand": [
          {
            "local-id": "strand-1",
            "connector-pin": [
              {
                "connector-identification": "25",
                "pin-identification": "25",
                "equipment-uuid": "0d778e34-fdef-3e09-bfb5-ed1fa33bdb54"
              },
              {
                "connector-identification": "7",
                "pin-identification": "7",
                "equipment-uuid": "19499090-8719-3020-8028-aa158a029a0b"
              }
            ],
            "name": [
              {
                "value-name": "STRAND_NAME",
                "value": "NCS2K-20-SMRFS/6 -> NCS2K-MF-DEG-5/3-strand1"
              }
            ]
          },
          {
            "local-id": "strand-2",
            "connector-pin": [
              {
                "connector-identification": "26",
                "pin-identification": "26",
                "equipment-uuid": "0d778e34-fdef-3e09-bfb5-ed1fa33bdb54"
              },
              {
                "connector-identification": "8",
                "pin-identification": "8",
                "equipment-uuid": "19499090-8719-3020-8028-aa158a029a0b"
              }
            ],
            "name": [
              {
                "value-name": "STRAND_NAME",
                "value": "NCS2K-20-SMRFS/6 -> NCS2K-MF-DEG-5/3-strand2"
              }
            ]
          }
        ],
        "name": [
          {
            "value-name": "PHYSICAL_SPAN_NAME",
            "value": "NCS2K-20-SMRFS/6 -> NCS2K-MF-DEG-5/3"
          }
        ]
      }
    ]
  },
  "tapi-topology:topology-context": {
    "topology": [
      {
        "uuid": "4b1b5fac-a97f-32bc-af8a-7fd5cec82ad7",
        "node": [
          {
            "uuid": "01ac5a9f-c08b-325e-b8e5-63f3b69d7cdb",
            "owned-node-edge-point": [
              {
                "uuid": "06fa9c7d-30c8-3f7b-b750-75eff10ab1ae",
```

```
                    "layer-protocol-name": "PHOTONIC_MEDIA",
                    "supported-cep-layer-protocol-qualifier": ["tapi-photonic-
media:PHOTONIC_LAYER_QUALIFIER_MC"],
                    "link-port-direction": "BIDIRECTIONAL",
                    "link-port-role": "SYMMETRIC",
                    "name": [
                      {
                        "value-name": "INVENTORY_ID",
                        "value": "/ne=ROADM_Site10/r=1/sh=1/sl=2/s_sl=0/p=6,5"
                      },
                      {
                        "value-name": "NEP_NAME",
                        "value": "ROADM_Site10-nep-1/2/LINE"
                      }
                    ],
                    "administrative-state": "UNLOCKED",
                    "operational-state": "ENABLED",
                    "lifecycle-state": "INSTALLED",
                    "termination-direction": "BIDIRECTIONAL",
                    "termination-state": "LP_CAN_NEVER_TERMINATE",
                    "total-potential-capacity": {
                      "total-size": {
                        "value": "0",
                        "unit": "GHz"
                      }
                    },
                    "available-capacity": {
                      "total-size": {
                        "value": "0",
                        "unit": "GHz"
                      }
                    },
                    "tapi-connectivity:cep-list": {
                      "connection-end-point": [
                        {
                          "uuid": "06caa416-2f2b-3b36-9bdd-3877d68c3bac",
                          "layer-protocol-name": "PHOTONIC_MEDIA",
                          "layer-protocol-qualifier": "tapi-photonic-media:PHOTONIC_LAYER_QUALIFIER_MC",
                          "parent-node-edge-point": {
                            "topology-uuid": "4b1b5fac-a97f-32bc-af8a-7fd5cec82ad7",
                            "node-uuid": "01ac5a9f-c08b-325e-b8e5-63f3b69d7cdb",
                            "node-edge-point-uuid": "06fa9c7d-30c8-3f7b-b750-75eff10ab1ae"
                          },
                          "client-node-edge-point": [
                            {
                              "topology-uuid": "4b1b5fac-a97f-32bc-af8a-7fd5cec82ad7",
                              "node-uuid": "01ac5a9f-c08b-325e-b8e5-63f3b69d7cdb",
                              "node-edge-point-uuid": "1307a546-9ea4-3a10-8ee7-5a6ccae1872f"
                            }
                          ],
                          "connection-port-direction": "BIDIRECTIONAL",
                          "connection-port-role": "SYMMETRIC",
                          "name": [
                            {
                              "value-name": "CEP_NAME",
                              "value": "ROADM_Site10-cep-1/2/LINE"
                            }
                          ],
                          "operational-state": "ENABLED",
                          "lifecycle-state": "INSTALLED",
                          "termination-direction": "BIDIRECTIONAL",
                          "termination-state": "LP_CAN_NEVER_TERMINATE",
                          "tapi-eth:eth-connection-end-point-spec": {
                            "eth-term": {
```

```
                "priority-regenerate": {
                  "priority-1": "1",
                  "priority-2": "2",
                  "priority-3": "3",
                  "priority-4": "4",
                  "priority-5": "5",
                  "priority-6": "6",
                  "priority-7": "7"
                },
                "port-vid": "1"
              },
              "eth-ctp": {
                "mac-length": "2000"
              }
            },
            "tapi-odu:odu-connection-end-point-spec": {
              "odu-common": {
                "number-of-odu-c": "1"
              },
              "odu-protection": {
                "aps-enable": true
              }
            },
            "tapi-photonic-media:otsi-connection-end-point-spec": {
              "otsi-termination": {
                "selected-modulation": "UNDEFINED"
              }
            },
            "tapi-photonic-media:media-channel-connection-end-point-spec": {
              "media-channel": {
                "occupied-spectrum": {
                  "upper-frequency": "196125000",
                  "lower-frequency": "196075000"
                }
              }
            }
          }
        ]
      },
      "tapi-equipment:supporting-access-port": {
        "access-port": {
          "device-uuid": "01ac5a9f-c08b-325e-b8e5-63f3b69d7cdb",
          "access-port-uuid": "a3feaa64-ef44-3192-ad21-6cff6020a91f"
        }
      },
      "tapi-photonic-media:media-channel-node-edge-point-spec": {
        "mc-pool": {
          "occupied-spectrum": [
            {
              "upper-frequency": "196125000",
              "lower-frequency": "196075000"
            }
          ]
        }
      }
    }
  ],
  "layer-protocol-name": ["PHOTONIC_MEDIA"],
  "name": [
    {
      "value-name": "NODE_NAME",
      "value": "ROADM_Site10"
    }
```

```
        ],
        "administrative-state": "UNLOCKED",
        "operational-state": "ENABLED",
        "lifecycle-state": "INSTALLED",
        "total-potential-capacity": {
          "total-size": {
            "value": "0",
            "unit": "GHz"
          }
        },
        "available-capacity": {
          "total-size": {
            "value": "0",
            "unit": "GHz"
          }
        },
        "cost-characteristic": [
          {
            "cost-name": "HOP_COUNT",
            "cost-value": "8",
            "cost-algorithm": "HOP_COUNT_ALGO"
          }
        ],
        "latency-characteristic": [
          {
            "traffic-property-name": "FIXED_LATENCY",
            "fixed-latency-characteristic": "8",
            "queing-latency-characteristic": "8",
            "jitter-characteristic": "10",
            "wander-characteristic": "8"
          }
        ]
      }
    ],
    "link": [
      {
        "uuid": "20d6c509-0a59-3a13-8732-8d41fcefc075",
        "node-edge-point": [
          {
            "topology-uuid": "4b1b5fac-a97f-32bc-af8a-7fd5cec82ad7",
            "node-uuid": "e6e44228-da71-3f48-be38-f570259deb3c",
            "node-edge-point-uuid": "614df294-fb87-3b5c-a82e-f00a6cdcf695"
          },
          {
            "topology-uuid": "4b1b5fac-a97f-32bc-af8a-7fd5cec82ad7",
            "node-uuid": "f8f2433a-f4b3-3789-b86e-07fe7d62f58b",
            "node-edge-point-uuid": "7c95267e-9da9-32f4-b3a4-0d09b272ca3c"
          }
        ],
        "layer-protocol-name": ["PHOTONIC_MEDIA"],
        "direction": "BIDIRECTIONAL",
        "name": [
          {
            "value-name": "LINK_NAME",
            "value": "Fiber-11"
          }
        ],
        "administrative-state": "UNLOCKED",
        "operational-state": "ENABLED",
        "lifecycle-state": "INSTALLED",
        "total-potential-capacity": {
          "total-size": {
            "value": "0",
            "unit": "GHz"
```

```
                  }
                },
                "available-capacity": {
                  "total-size": {
                    "value": "0",
                    "unit": "GHz"
                  }
                },
                "cost-characteristic": [
                  {
                    "cost-name": "LENGTH",
                    "cost-value": "0"
                  }
                ],
                "latency-characteristic": [
                  {
                    "traffic-property-name": "FIXED_LATENCY",
                    "fixed-latency-characteristic": "0"
                  }
                ],
                "risk-characteristic": [
                  {
                    "risk-characteristic-name": "SRLG",
                    "risk-identifier-list": ["0"]
                  }
                ],
                "validation-mechanism": [
                  {
                    "validation-mechanism": "ABC"
                  }
                ],
                "transitioned-layer-protocol-name": ["Element{name=ODU, ns=], path=/ODU}",
"Element{name=PHOTONIC_MEDIA, ns=], path=/PHOTONIC_MEDIA}"]
              }
            ],
            "layer-protocol-name": ["PHOTONIC_MEDIA"]
          }
        ]
      }
    }
}
```