Provisioning Reconfigurable Optical Add/Drop Cards

This chapter describes the line cards deployed in reconfigurable optical add/drop (ROADM) networks. These cards perform mesh topology functions.

For card safety and compliance information, refer to the Regulatory Compliance and Safety Information for Cisco NCS Platforms document.

- Card Compatibility, page 1
- Channel Allocation Plans, page 2
- Safety Labels, page 5
- 40-DMX-C and 40-DMX-CE Card, page 5
- 40-MUX-C Card, page 11
- 40-WSS-C and 40-WSS-CE Card, page 13
- 40-WXC-C Card, page 16
- 80-WXC-C Card, page 20
- 16-WXC-FS Card, page 27
- Single Module ROADM (SMR-C) Cards, page 31

Card Compatibility

The following table lists the Cisco Transport Controller (CTC) software compatibility for the ROADM cards.

Table 1: Software Release Compatibility for ROADM Cards

Card Name	R10.0	R10.1	R10.3	R10.5	R10.5.2	R10.6.1
40-WSS-C	NCS 2006	NCS 2006	NCS 2006	NCS 2006	NCS 2006	NCS 2006

Card Name	R10.0	R10.1	R10.3	R10.5	R10.5.2	R10.6.1
40-WSS-CE	NCS 2006	NCS 2006	NCS 2006	NCS 2006	NCS 2006	NCS 2006
40-DMX-C	NCS 2006	NCS 2006	NCS 2006	NCS 2006	NCS 2006	NCS 2006
40-DMX-CE	NCS 2006	NCS 2006	NCS 2006	NCS 2006	NCS 2006	NCS 2006
40-MUX-C	NCS 2006	NCS 2006	NCS 2006	NCS 2006	NCS 2006	NCS 2006
40-WXC-C	NCS 2006	NCS 2006	NCS 2006	NCS 2006	NCS 2006	NCS 2006
80-WXC-C	NCS 2006	NCS 2006	NCS 2006	NCS 2006	NCS 2006, NCS 2015	NCS 2006, NCS 2015
16-WXC-FS	NCS 2006	NCS 2006	NCS 2006	NCS 2006, NCS 2015	NCS 2006, NCS 2015	NCS 2006, NCS 2015
40-SMR1-C	NCS 2002, NCS 2006	NCS 2002, NCS 2006	NCS 2002, NCS 2006	NCS 2002, NCS 2006	NCS 2002, NCS 2006	NCS 2002, NCS 2006
40-SMR2-C	NCS 2002, NCS 2006	NCS 2002, NCS 2006	NCS 2002, NCS 2006	NCS 2002, NCS 2006	NCS 2002, NCS 2006	NCS 2002, NCS 2006
17 SMR9 FS, 24 SMR9 FS, 34 SMR9 FS, SMR20 FS, SMR20 FS CV	No	No	No	NCS 2002, NCS 2006, NCS 2015	NCS 2002, NCS 2006, NCS 2015	NCS 2002, NCS 2006, NCS 2015

Channel Allocation Plans

ROADM cards are designed for use with specific channels in the C band and L band. In most cases, the channels for these cards are either numbered (for example, 1 to 32 or 1 to 40) or delimited (odd or even). Client interfaces must comply with these channel assignments to be compatible with the NCS system.

The following cards operate in the C-band:

- 40-MUX-C
- 40-WXC-C
- 80-WXC-C

- 40-SMR1-C
- 40-SMR2-C
- MMU

Table 2: DWDM L-band Channel Allocation Plan at 50 GHz Spacing, on page 3 lists the L-band channel IDs and wavelengths at ITU-T 50-GHz intervals. This is a comprehensive L-band channel table that encompasses present and future card capabilities.

Table 2: DWDM L-band Channel Allocation Plan at 50 GHz Spacing

Channel Number[1]	Frequency (THz)	Wavelength (nm)		Channel Number	Frequency (THz)	Wavelength (nm)
1	190.85	1570.83		41	188.85	1587.46
2	190.8	1571.24		42	188.8	1587.88
3	190.75	1571.65		43	188.75	1588.30
4	190.7	1572.06		44	188.7	1588.73
5	190.65	1572.48		45	188.65	1589.15
6	190.6	1572.89		46	188.6	1589.57
7	190.55	1573.30		47	188.55	1589.99
8	190.5	1573.71		48	188.5	1590.41
9	190.45	1574.13		49	188.45	1590.83
10	190.4	1574.54		50	188.4	1591.26
11	190.35	1574.95		51	188.35	1591.68
12	190.3	1575.37		52	188.3	1592.10
13	190.25	1575.78		53	188.25	1592.52
14	190.2	1576.20		54	188.2	1592.95
15	190.15	1576.61		55	188.15	1593.37
16	190.1	1577.03		56	188.1	1593.79
17	190.05	1577.44		57	188.05	1594.22
18	190	1577.86		58	188	1594.64
19	189.95	1578.27		59	187.95	1595.06

Channel Number[1]	Frequency (THz)	Wavelength (nm)		Channel Number	Frequency (THz)	Wavelength (nm)
20	189.9	1578.69		60	187.9	1595.49
21	189.85	1579.10		61	187.85	1595.91
22	189.8	1579.52		62	187.8	1596.34
23	189.75	1579.93		63	187.75	1596.76
24	189.7	1580.35		64	187.7	1597.19
25	189.65	1580.77		65	187.65	1597.62
26	189.6	1581.18		66	187.6	1598.04
27	189.55	1581.60		67	187.55	1598.47
28	189.5	1582.02		68	187.5	1598.89
29	189.45	1582.44		69	187.45	1599.32
30	189.4	1582.85		70	187.4	1599.75
31	189.35	1583.27		71	187.35	1600.17
32	189.3	1583.69		72	187.3	1600.60
33	189.25	1584.11		73	187.25	1601.03
34	189.2	1584.53		74	187.2	1601.46
35	189.15	1584.95		75	187.15	1601.88
36	189.1	1585.36		76	187.1	1602.31
37	189.05	1585.78		77	187.05	1602.74
38	189	1586.20		78	187	1603.17
39	188.95	1586.62		79	186.95	1603.60
40	188.9	1587.04		80	186.9	1604.03

1 Channels on the L-band are contiguous, starting at 1577.86 nm. The channels listed in this table begin with 1570.83 nm for backward compatibility with other ONS products.

Safety Labels

For information about safety labels, see the section, Class 1M Laser Product Cards.

40-DMX-C and 40-DMX-CE Card

The single-slot 40-channel demultiplexer C-band (40-DMX-C) or single-slot 40-channel demultiplexer C-band, even channels (40-DMX-CE) card demultiplexes 40 100-GHz-spaced channels identified in the channel plan (Table 5: Channel Allocation Plan, on page 9), and sends them to dedicated output ports. The overall optical power can be adjusted using a single VOA that is common to all channels. The 40-DMX-C card is unidirectional, optically passive, and can be installed in Slots 1 to 6 and 12 to 17.

The 40-DMX-C or 40-DMX-CE has two types of ports:

- COM RX port: COM RX is the line input port for the aggregate optical signal being demultiplexed. This port is supported by a VOA for optical power regulation and a photodiode for per channel optical power monitoring.

  Note By default, the VOA is set to its maximum attenuation for safety purposes (for example, electrical power failure). A manual VOA setting is also available.

- DROP TX ports (1 to 40): On its output, the 40-DMX-C or 40-DMX-CE card provides 40 drop ports that are typically used for dropping channels within the ROADM node. These ports are connected using five physical connectors on the front panel that accept MPO client input cables. (MPO cables break out into eight separate cables.) The 40-DMX-C card also has one LC-PC-II optical connector for the main input.

The following figure shows the 40-DMX-C or 40-DMX-CE optical module functional block diagram.

Figure 1: 40-DMX-C or 40-DMX-CE Optical Module Functional Block Diagram

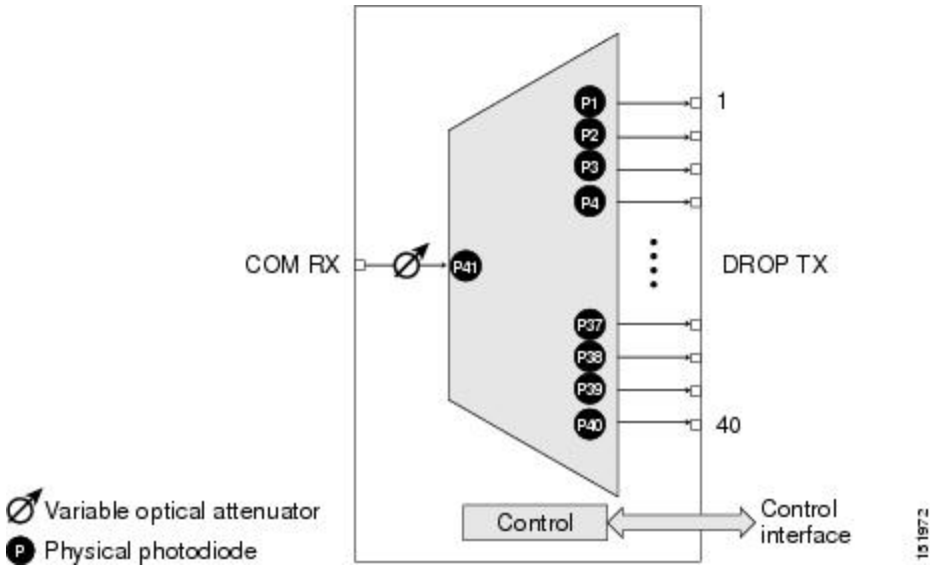

For more information about the 40-DMX-C or 40-DMX-CE card, see http://www.cisco.com/en/US/prod/collateral/optical/ps5724/ps2006/product_data_sheet0900aecd805ebf1d.html.

40-DMX-C and 40-DMX-CE ROADM Functionality

The 40-DMX-C (or 40-DMX-CE) card works in combination with the 40-WSS-C (or 40-WSS-CE) card to implement ROADM functionality. As a ROADM node, the node can be configured at the optical channel level using CTC, Cisco Transport Planner, and CTM. ROADM functionality using the 40-DMX-C (or 40-DMX-CE) card requires two single-slot 40-DMX-C (or 40-DMX-CE) cards and two 40-WSS-C (or 40-WSS-CE) double-slot cards (for a total of six slots in the chassis).

For other cards' ROADM functionality, see that card's description in this chapter. For a diagram of a typical ROADM configuration, see the section, ROADM Node in the *Cisco NCS 2000 Series Network Configuration Guide*.

40-DMX-C and 40-DMX-CE Power Monitoring

Physical photodiodes P1 through P40 monitor the power at the outputs of the 40-DMX-C or 40-DMX-CE card. P41 monitors the total multiplexed power at the input, calibrated to the COM-RX port. The following table shows the returned power level values calibrated to each port.

Table 3: 40-DMX-C or 40-DMX-CE Port Calibration

Photodiode	CTC Type Name	Calibrated to Port
P1–P40	DROP	DROP TX
P41	INPUT COM	COM RX

For information on the associated TL1 AIDs for the optical power monitoring points, refer the “CTC Port Numbers and TL1 Aids” section in *Cisco NCS 2000 Series TL1 Command Guide*.

40-DMX-C and 40-DMX-CE Channel Plan

This table shows the 40 ITU-T 100-GHz-spaced, C-band channels (wavelengths) that are demultiplexed by the 40-DMX-C card.

Table 4: Channel Allocation Plan

Band ID	Channel Label	Frequency (GHz)	Wavelength (nm)
Ch. 0[2]	29.5	196	1529.55
B30.3	30.3	195.9	1530.33
	31.1	195.8	1531.12
	31.9	195.7	1531.90
	32.6	195.6	1532.68
	33.4	195.5	1533.47
B34.2	34.2	195.4	1534.25
	35.0	195.3	1535.04
	35.8	195.2	1535.82
	36.6	195.1	1536.61
	37.4	195	1537.40
B38.1	38.1	194.9	1538.19
	38.9	194.8	1538.98
	39.7	194.7	1539.77
	40.5	194.6	1540.56
	41.3	194.5	1541.35

Band ID	Channel Label	Frequency (GHz)	Wavelength (nm)
B42.1	42.1	194.4	1542.14
	42.9	194.3	1542.94
	43.7	194.2	1543.73
	44.5	194.1	1544.53
	45.3	194	1545.32
B46.1	46.1	193.9	1546.12
	46.9	193.8	1546.92
	47.7	193.7	1547.72
	48.5	193.6	1548.51
	49.3	193.5	1549.32
B50.1	50.1	193.4	1550.12
	50.9	193.3	1550.92
	51.7	193.2	1551.72
	52.5	193.1	1552.52
	53.3	193	1553.33
B54.1	54.1	192.9	1554.13
	54.9	192.8	1554.94
	55.7	192.7	1555.75
	56.5	192.6	1556.55
	57.3	192.5	1557.36

Band ID	Channel Label	Frequency (GHz)	Wavelength (nm)
B58.1	58.1	192.4	1558.17
	58.9	192.3	1558.98
	59.7	192.2	1559.79
	60.6	192.1	1560.61
	61.4	192	1561.42

2 This channel is unused by the 40-WXC-C

This table shows the 40 ITU-T 100-GHz-spaced, C-band channels (wavelengths) that are demultiplexed by the 40-DMX-CE card.

Table 5: Channel Allocation Plan

Band ID	Channel Label	Frequency (GHz)	Wavelength (nm)
B30.7	30.7	195.85	1530.72
	31.5	195.75	1531.51
	32.3	195.65	1532.29
	33.1	195.55	1533.07
	33.9	195.45	1533.86
B34.6	34.6	195.35	1534.64
	35.4	195.25	1535.43
	36.2	195.15	1536.22
	37.0	195.05	1537.00
	37.8	194.95	1537.79
B38.6	38.6	194.85	1538.58
	39.4	194.75	1539.37
	40.1	194.65	1540.16
	40.9	194.55	1540.95
	41.8	194.45	1541.75

Band ID	Channel Label	Frequency (GHz)	Wavelength (nm)
B42.5	42.5	194.35	1542.54
	43.3	194.25	1543.33
	44.1	194.15	1544.13
	44.9	194.05	1544.92
	45.7	193.95	1545.72
B46.5	46.5	193.85	1546.52
	47.3	193.75	1547.32
	48.1	193.65	1548.11
	48.9	193.55	1548.91
	49.7	193.45	1549.72
B50.5	50.5	193.35	1550.52
	51.3	193.25	1551.32
	52.1	193.15	1552.12
	52.9	193.05	1552.93
	53.7	192.95	1553.73
B54.4	54.4	192.85	1554.54
	55.3	192.75	1555.34
	56.1	192.65	1556.15
	56.9	192.55	1556.96
	57.8	192.45	1557.77

Band ID	Channel Label	Frequency (GHz)	Wavelength (nm)
B58.6	58.6	192.35	1558.58
	59.4	192.25	1559.39
	60.2	192.15	1560.20
	61.0	192.05	1561.01
	61.8	191.95	1561.83

Related Procedures for 40-DMX-C and 40-DMX-CE Cards

The following section lists procedures and tasks related to the configuration of the 40-DMX-C or 40-DMX-CE card:

- NTP-G140 Installing Fiber-Optic Cables Between Terminal, Hub, or ROADM Nodes
- NTP-G152 Creating and Verifying Internal Patchcords
- NTP-G37 Running Automatic Node Setup
- NTP-G59 Creating, Deleting, and Managing Optical Channel Network Connections
- NTP-G51 Verify DWDM Node Turn Up
- DLP-G141 View Optical Power Statistics for 32WSS, 32WSS-L, 32DMX, 40-WSS-C, 40-WSS-CE, 40-WXC-C, 80-WXC-C, 16-WXC-FS, 40-MUX-C, 40-DMX-C, and 40-DMX-CE Cards
- NTP-G175 Modifying Line Card Settings and PM Thresholds for Multiplexer and Demultiplexer Cards

40-MUX-C Card

The single-slot 40-Channel Multiplexer C-band (40-MUX-C) card multiplexes forty ITU-T 100-GHz-spaced channels identified in the channel plan in Table 4: Channel Allocation Plan, on page 7. The 40-MUX-C card can be installed in Slots 1 to 6 and 12 to 17. The 40-MUX-C card is typically used in hub nodes.

The 40-MUX-C card has two types of ports:

- COM TX port: COM TX is the line output port for the aggregate optical signal being multiplexed. This port is supported by both a VOA for optical power regulation and a photodiode for per channel optical power monitoring.

Note By default, the VOA is set to its maximum attenuation for safety purposes (for example, electrical power failure). A manual VOA setting is also available.

- DROP RX ports (1 to 40): The 40-MUX-C card provides 40 input optical channels. These ports are connected using five physical receive connectors on the card's front panel that accept MPO cables for

the client input interfaces. MPO cables break out into eight separate cables. The 40-DMX-C card also has one LC-PC-II optical connector for the main output. For the wavelength range, see Table 4: Channel Allocation Plan, on page 7.

The following figure shows the 40-MUX-C optical module functional block diagram.

Figure 2: 40-MUX-C Optical Module Functional Block Diagram

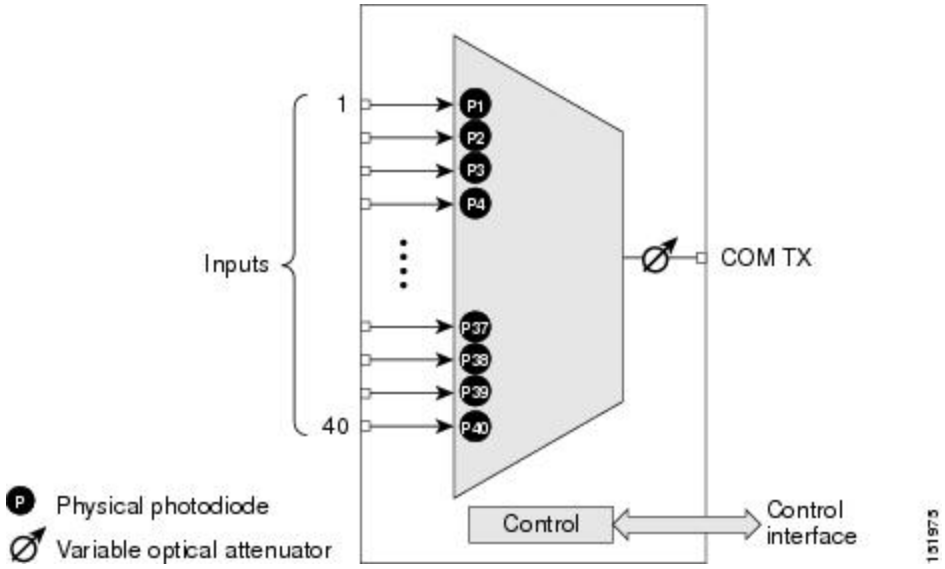

For more information about the 40-MUX-C card, see http://www.cisco.com/en/US/prod/collateral/optical/ps5724/ps2006/product_data_sheet0900aecd805ebf1d.html.

40-MUX-C Card Power Monitoring

Physical photodiodes P1 through P40 monitor the power of the individual input ports to the 40-MUX-C card. P41 monitors the total multiplexed output power, calibrated to the COM-TX port. The following table shows the returned power level values calibrated to each port.

Table 6: 40-MUX-C Port Calibration

Photodiode	CTC Type Name	Calibrated to Port
P1–P40	ADD	ADD RX
P41	OUTPUT COM	COM-TX

For information on the associated TL1 AIDs for the optical power monitoring points, refer the “CTC Port Numbers and TL1 Aids” section in *Cisco NCS 2000 Series TL1 Command Guide*.

40-MUX-C Card Channel Plan

Table 4: Channel Allocation Plan, on page 7 shows the 40 ITU-T 100-GHz-spaced, C-band channels (wavelengths) that are multiplexed by the 40-MUX-C card.

Related Procedures for 40-MUX-C Card

The following section lists procedures and tasks related to the configuration of the 40-MUX-C card:

- NTP-G140 Installing Fiber-Optic Cables Between Terminal, Hub, or ROADM Nodes
- NTP-G152 Creating and Verifying Internal Patchcords
- NTP-G37 Running Automatic Node Setup
- NTP-G59 Creating, Deleting, and Managing Optical Channel Network Connections
- NTP-G51 Verify DWDM Node Turn Up
- DLP-G141 View Optical Power Statistics for 32WSS, 32WSS-L, 32DMX, 40-WSS-C, 40-WSS-CE, 40-WXC-C, 80-WXC-C, 16-WXC-FS, 40-MUX-C, 40-DMX-C, and 40-DMX-CE Cards
- NTP-G175 Modifying Line Card Settings and PM Thresholds for Multiplexer and Demultiplexer Cards

40-WSS-C and 40-WSS-CE Card

The double-slot 40-channel wavelength selective switch C-band (40-WSS-C) or the double-slot 40-channel wavelength selective switch even-channel C-band (40-WSS-CE) card switches 40 ITU-T 100-GHz-spaced channels identified in the channel plan (Table 4: Channel Allocation Plan, on page 7 or Table 5: Channel Allocation Plan, on page 9) and sends them to dedicated output ports. The 40-WSS-C or 40-WSS-CE card is bidirectional and optically passive. The card can be installed in Slots 1 to 6 and 12 to 17

The 40-WSS-C or 40-WSS-CE features include:

- Receipt of an aggregate DWDM signal into 40 output optical channels from the Line receive port (EXP RX) in one direction and from the COM-RX port in the other direction.
- Per-channel optical power monitoring using photodiodes.
- Signal splitting in a 70%-to-30% ratio, sent to the 40-DMX-C (or 40-DMX-CE) for dropping signals, then to the other 40-WSS-C (or 40-WSS-CE) card.
- Aggregate DWDM signal monitoring and control through a variable optical attenuator (VOA). In the case of electrical power failure, the VOA is set to its maximum attenuation for safety purposes. A manual VOA setting is also available.

Within the 40-WSS-C or 40-WSS-CE card, the first AWG opens the spectrum and each wavelength is directed to one of the ports of a 1x2 optical switch. The same wavelength can be passed through or stopped. If the pass-through wavelength is stopped, a new channel can be added at the ADD port. The card's second AWG multiplexes all of the wavelengths, and the aggregate signal is output through the COM-TX port.

The 40-WSS-C or 40-WSS-CE has eight types of ports:

- ADD RX ports (1 to 40): These ports are used for adding channels. Each add channel is associated with an individual switch element that selects whether an individual channel is added. Each add port has optical power regulation provided by a VOA. The five connectors on the card faceplate accept MPO cables for the client input interfaces. MPO cables break out into eight separate cables. The 40-WSS-C or 40-WSS-CE card also has one LC-PC-II optical connector for the main input.
- COM RX: The COM RX port receives the optical signal from a preamplifier (such as the OPT-PRE) and sends it to the optical splitter.
- COM TX: The COM TX port sends an aggregate optical signal to a booster amplifier card (for example, the OPT-BST card) for transmission outside of the NE.
- EXP RX port: The EXP RX port receives an optical signal from another 40-WSS-C or 40-WSS-CE card in the same NE.
- EXP TX: The EXP TX port sends an optical signal to the other 40-WSS-C or 40-WSS-CE card within the NE.
- DROP TX port: The DROP TX port sends the split off optical signal that contains drop channels to the 40-DMX-C(or 40-DMX-CE) card, where the channels are further processed and dropped.

The following figure shows a functional block diagram of the 40-WSS-C or 40-WSS-CE card.

Figure 3: 40-WSS-C or 40-WSS-CE Block Diagram

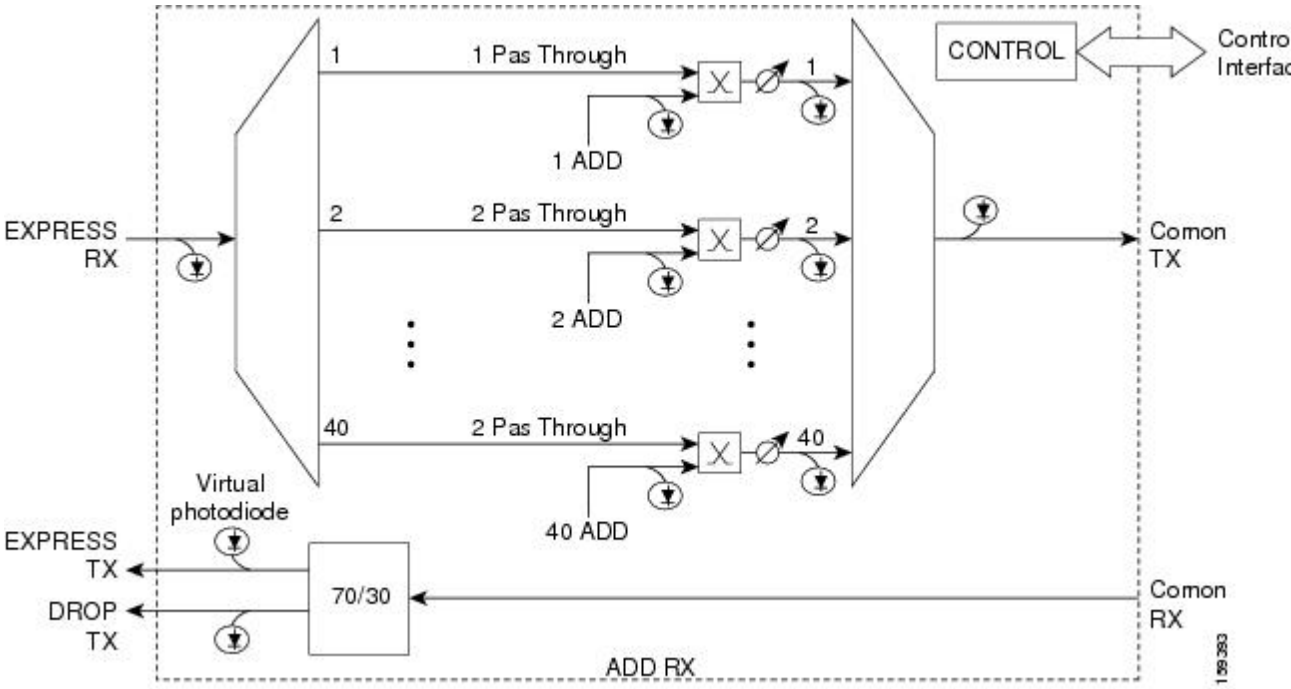

For more information about the 40-WSS-C or 40-WSS-CE card, see http://www.cisco.com/en/US/prod/collateral/optical/ps5724/ps2006/product_data_sheet0900aecd805ebf1d.html.

40-WSS-C and 40-WSS-CE ROADM Functionality

The 40-WSS-C (or 40-WSS-CE) card works in combination with the 40-DMX-C (or 40-DMX-CE) card to implement ROADM functionality. As a ROADM node, the node can be configured at the optical channel level using CTC, Cisco Transport Planner, and CTM. ROADM functionality using the 40-WSS-C (or 40-WSS-CE) card requires two 40-WSS-C (or 40-WSS-CE) double-slot cards and two 40-DMX-C (or 40-DMX-CE) single-slot cards (for a total of six slots in the chassis).

For information about ROADM functionality for other cards, see that card's description in this chapter. For a diagram of a typical ROADM configuration, see the section, ROADM Node in the *Cisco NCS 2000 Series Network Configuration Guide*.

40-WSS-C and 40-WSS-CE Power Monitoring

The 40-WSS-C (or 40-WSS-CE) has physical diodes that monitor power at various locations on the card. The following table lists the physical diode descriptions.

Table 7: 40-WSS-C or 40-WSS-CE Physical Photodiode Port Calibration

Physical Photodiode	CTC Type Name	Calibrated to Port(s)
P1	DROP	DROP TX
P2	EXP	EXP RX
PDi3[3]	RX	Add i RX ports (that is, channel input Add i RX power), up to 40 ports and therefore 40 PDs
PDi4[1]	TX	COM TX port (that is, per channel output COM TX power) up to 40 channels and therefore 40 PDs
PD5	COM	COM TX port (that is, total output COM TX power)

3 i indicates any channel from 01 through 40.

For information on the associated TL1 AIDs for the optical power monitoring points, refer the "CTC Port Numbers and TL1 Aids" section in *Cisco NCS 2000 Series TL1 Command Guide*.

Additionally, the 40-WSS-C (or 40-WSS-CE) has two virtual diodes. Virtual diodes are monitor points for each physical photodiode; they are identified with a physical diode relative to the way that the physical diode is identified with one of the two interlink (ILK) ports. The following table lists the virtual diodes.

Table 8: 40-WSS-C or 40-WSS-CE Virtual Photodiode Port Calibration

Virtual Photodiode	CTC Type Name	Calibrated to Port(s)
VPD1	COM	COM RX port (total input COM RX power)
VPD2	EXP	EXP TX port (total output EXP TX power)

40-WSS-C and 40-WSS-CE Channel Plan

Table 4: Channel Allocation Plan, on page 7 shows the 40 ITU-T 100-GHz-spaced, C-band channels (wavelengths) that are switched by the 40-WSS-C card.

Table 5: Channel Allocation Plan, on page 9 shows the 40 ITU-T 100-GHz-spaced, C-band channels (wavelengths) that are switched by the 40-WSS-CE card.

Related Procedures for 40-WSS-C and 40-WSS-CECards

The following section lists procedures and tasks related to the configuration of the 40-WSS-C or 40-WSS-CE card:

- NTP-G140 Installing Fiber-Optic Cables Between Terminal, Hub, or ROADM Nodes
- NTP-G152 Creating and Verifying Internal Patchcords
- NTP-G37 Running Automatic Node Setup
- NTP-G59 Creating, Deleting, and Managing Optical Channel Network Connections
- NTP-G51 Verify DWDM Node Turn Up
- DLP-G141 View Optical Power Statistics for 32WSS, 32WSS-L, 32DMX, 40-WSS-C, 40-WSS-CE, 40-WXC-C, 80-WXC-C, 16-WXC-FS, 40-MUX-C, 40-DMX-C, and 40-DMX-CE Cards
- NTP-G93 Modifying the WSS Card Line Settings and PM Thresholds

40-WXC-C Card

The double-slot 40-channel wavelength cross-connect C-band (40-WXC-C) card selectively sends any wavelength combination coming from nine input ports to a common output port. The device can manage up to 41 channels spaced at 100GHz on each port according to the channel grid in Table 4: Channel Allocation Plan, on page 7. Each channel can be selected from any input. The card is optically passive and provides bidirectional capability. It can be installed in Slots 1 to 6 and 12 to 17.

.The 40-WXC-C card provides the following features:

- Demultiplexing, selection, and multiplexing of DWDM aggregate signal from input ports to common output port.
- Aggregate DWDM signal monitoring and control through a VOA.
- VOAs are deployed in every channel path in order to regulate the channel's optical power. In the case of an electrical power failure, VOAs are set to their maximum attenuation value, or to a fixed and configurable one. The VOA can also be set manually.
- Per-channel optical power monitoring using photodiodes.

The 40-WXC-C card acts as a selector element with the following characteristics:

- It is able to select a wavelength from one input port and pass the wavelength through to the common out port. Simultaneously, the card can block the same wavelength coming from the other eight input ports.
- It is able to stop wavelengths from all nine inputs.
- It is able to monitor optical power and control path attenuation using per channel VOA independently of the wavelength input-to-out port connection.

The 40-WXC-C card has six types of ports:

- COM RX: The COM RX port receives the optical signal from a preamplifier (such as the OPT-PRE) and sends it to the optical splitter.
- COM TX: The COM TX port sends an aggregate optical signal to a booster amplifier card (for example, the OPT-BST card) for transmission outside of the NE.
- EXP TX: The EXP TX port sends an optical signal to the other 40-WXC-C card within the NE.
- MON TX: The optical service channel (OSC) monitor.
- ADD/DROP RX: The 40-WXC-C card provides 40 input optical channels. For the wavelength range, see Table 4: Channel Allocation Plan, on page 7.
- ADD/DROP TX: The DROP TX port sends the split off optical signal that contains drop channels to the 40-WXC-C card, where the channels are further processed and dropped.

The following figure shows the 40-WXC-C optical module functional block diagram.

Figure 4: 40-WXC-C Optical Module Functional Block Diagram

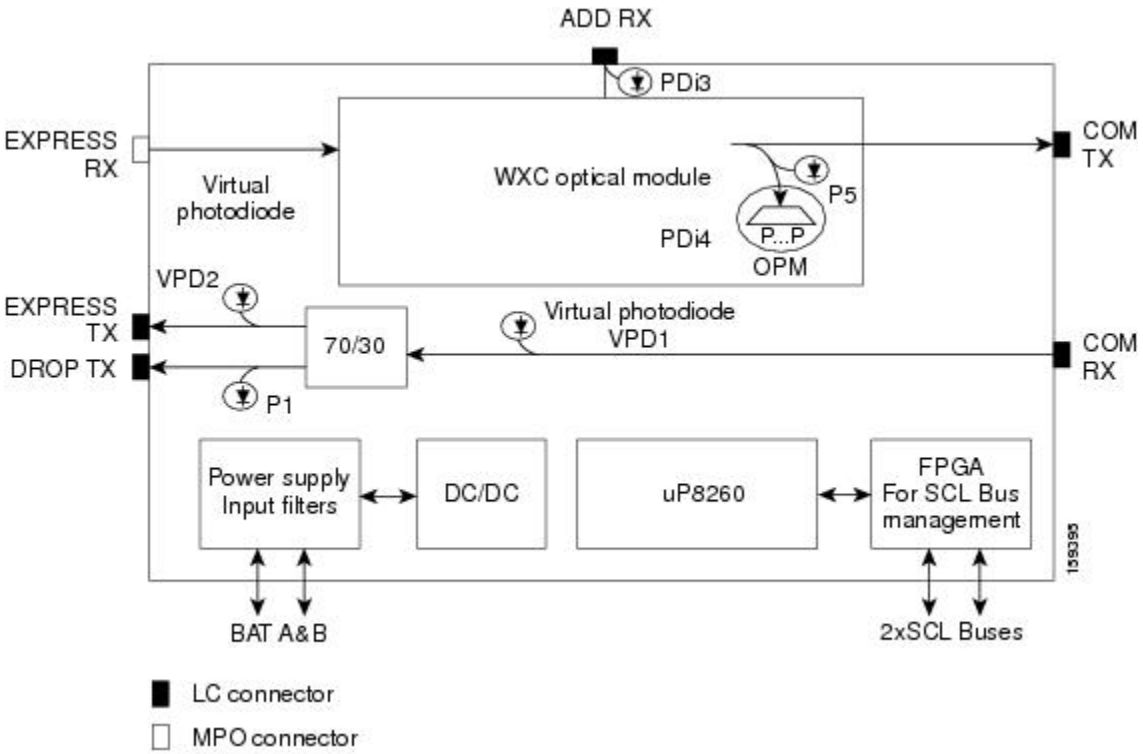

For more information about the 40-WXC-C card, see http://www.cisco.com/en/US/prod/collateral/optical/ps5724/ps2006/product_data_sheet0900aecd805ebf1d.html.

40-WXC-C Power Monitoring

The 40-WXC-C has 83 physical diodes (P1 through P40) that monitor power at the outputs of the card. The following table describes the physical diodes.

Table 9: 40-WXC-C Physical Photodiode Port Calibration

Physical Photodiode	CTC Type Name	Calibrated to Port(s)
P1	DROP	DROP TX
P2	EXP	EXP RX
PDi3[4]	RX	Add i RX ports (that is, channel input Add i RX power), up to 40 ports and therefore 40 PDs
PDi4[1]	TX	COM TX port (that is, per channel output COM TX power) up to 40 channels and therefore 40 PDs
PD5	COM	COM TX port (that is, total output COM TX power)

4 i indicates any channel from 01 through 40.

For information on the associated TL1 AIDs for the optical power monitoring points, refer the “CTC Port Numbers and TL1 Aids” section in *Cisco NCS 2000 Series TL1 Command Guide*.

Additionally, the 40-WXC-C has two virtual diodes. Virtual diodes are monitor points for each physical photodiode; they are identified with a physical diode relative to the way that the physical diode is identified with one of the two interlink (ILK) ports. The following table lists the virtual diodes.

Table 10: 40-WXC-C Virtual Photodiode Port Calibration

Virtual Photodiode	CTC Type Name	Calibrated to Port(s)
VPD1	COM	COM RX port (total input COM RX power)
VPD2	EXP	EXP TX port (total output EXP TX power)

The usage of WXC and mesh PP power readings to troubleshoot a LOS-P in WXC COM TX port in Side A is described in the following example. The example is explained assuming a single wavelength 1558.17 in the setup that comes from Side H to Side A. If there is more than one wavelength, then there is a risk of dropping traffic when pulling common fibers. The example is explained below:

When the wavelength from side H is 1558.17, you can check the power reading at WXC EXP TX port of the WXC card and verify the consistency with side H pre output power and WXC COMRX-EXPTX port loss. You can also check with a power meter connected to the 8th fiber (since it is from side H) of an MPO-FC (or LC) cable connected to the TAP-TX port of the MESH-PP. This value should be consistent with the previous reading, less than the insertion loss of the installed PP-MESH. If it is consistent, the issue is with the MPO between side A WXC and PP-MESH. If it is not consistent, the issue is with the PP-MESH or the LC-LC from side H. With only the PP-MESH already tested during installation, the only issue can be with the patch cord b.

You can check if the 1558.17 wavelength from side H is unequalized (that is, if the channel is not aligned with the linear fit of the power values of the other channels) by keeping the DMX COM-RX port of side H in maintenance, and checking both the signal and ASE levels of CHAN-TX ports of the DMX card. If the channel is equalized (that is, if the channel is aligned with the linear fit of the power values of the other channels), then the issue is in the WXC side A that cannot properly regulate the VOA for such channel. If the channel is unequalized, then the issue is on a remote node.

Note With an OSA or a spare 40 DMX, you can see the light coming from all the sides from TAP-TX of the PP-MESH.

40-WXC-C Channel Plan

Table 4: Channel Allocation Plan, on page 7 shows the 40 ITU-T 100-GHz-spaced, C-band channels (wavelengths) that are cross connected by the 40-WXC-C card.

Related Procedures for 40-WXC-C Card

The following section lists procedures and tasks related to the configuration of the 40-WXC-C card:

- NTP-G140 Installing Fiber-Optic Cables Between Terminal, Hub, or ROADM Nodes
- NTP-G185 Installing Fiber-Optic Cables between Mesh Nodes
- NTP-G152 Creating and Verifying Internal Patchcords
- NTP-G37 Running Automatic Node Setup
- NTP-G59 Creating, Deleting, and Managing Optical Channel Network Connections
- NTP-G51 Verify DWDM Node Turn Up
- DLP-G141 View Optical Power Statistics for 32WSS, 32WSS-L, 32DMX, 40-WSS-C, 40-WSS-CE, 40-WXC-C, 80-WXC-C, 16-WXC-FS, 40-MUX-C, 40-DMX-C, and 40-DMX-CE Cards
- NTP-G174 Modifying Line Settings and PM Thresholds for 40-WXC-C, 80-WXC-C, or 16-WXC-FS Cards

80-WXC-C Card

The double-slot 80-channel Wavelength Cross-Connect C-band (80-WXC-C) card manages up to 80 ITU-T 50 GHz-spaced channels identified in the channel plan and sends them to dedicated output ports. Each channel can be selected from any input port to any output port. The card is optically passive, and provides bidirectional capability. It can be installed in Slots 2 to 6 in the Cisco NCS 2006 and Slots 2 to 17 in the NCS 2015 chassis.

The 80-WXC-C card provides the following functionalities:

- When used in the multiplexer or bidirectional mode, the 80-WXC-C card allows selection of a single wavelength or any combination of wavelengths from any of the nine input ports to the common output port.
- When used in the bidirectional mode, the output wavelength from the COM-RX port is split to manage the express and drop wavelengths.
- When used in the demultiplexer mode, the 80-WXC-C card, allows selection of a single wavelength or a combination of wavelengths from the common input port to any of the nine output ports.
- Automatic VOA shutdown (AVS) blocking state on each wavelength and port.
- Per-channel (closed loop) power regulation on the output port based on OCM block feedback.
- Per-channel (open loop) attenuation regulation on the output port which is not based on the OCM feedback.

The OCM unit provides per-channel optical power monitoring on the following ports:

- COM port in output direction
- COM port in input direction
- DROP-TX port in output direction
- Eight Express/Add/Drop (EAD) ports and one Add/Drop (AD) port in both input and output directions

The 80-WXC-C card has 14 types of ports:

- MON: The MON port monitors power on the COM T/R port.
- COM RX: The COM RX port receives the optical signal from a preamplifier (such as the OPT-PRE) and sends it to the optical splitter.
- DROP TX: In the bidirectional mode, the DROP TX port sends the optical signal to the demultiplexer.
- EXP TX: The EXP TX port sends the split off optical signal that contains pass-through channels to the other side of the NE.
- COM T/R: The COM port is bidirectional. It functions as a COM TX port in the multiplexer mode and as a COM RX port in the demultiplexer mode.
- AD T/R: The AD port functions as ADD RX port in bidirectional and multiplexer modes and as a DROP port in the demultiplexer mode.
- EAD T/R *i* (where i = 1 to 8): The EAD ports function as EXP ports in the bidirectional mode, as ADD ports in the multiplexer mode, and as DROP ports in the demultiplexer mode.

The different units of the 80-WXC-C card are:

- 40/60 splitter with VOA on drop path—The preamplifier output signal from the preamplifier is split in a 40%-to-60% ratio; 40% is sent on the drop path (DROP-TX port) and 60% is sent on the pass-through path (EXP-TX port). The VOA equipped on the drop path is used to match the power range of the receiver photodiode without the need for bulk attenuation. If a channel is expected to be dropped in the 80-WXC-C card, the pass-through channel is stopped after the EXP-TX port either by a 40-WSS-C or a 40-WXC-C card.
- 50 Ghz 10 port WXC—The WXC block is optically passive and has bidirectional capability. The WXC block can selectively send any wavelength combination coming from the eight input EAD ports and one AD port to a common (COM) output port, when used as a multiplexer, whereas it can selectively send any wavelength combination coming from its common (COM) input port to any of the eight output EAD ports and one AD port, when used as a demultiplexer. The WXC block can manage (on each port) up to 80 channels according to the channel grid reported in Table 13: 80-WXC-C Channel Plan, on page 22. Each channel can be selected from any input and routed to any output.
- 50 Ghz Optical Channel Monitor (OCM)—The OCM provides per channel power monitoring on the COM T/R, DROP-TX, AD, and EAD*i* (*i*=1 to 8) ports. The power value for each wavelength is refreshed after a variable timer depending on the port and card activity.

For more information about the 80-WXC-C card, see http://www.cisco.com/en/US/prod/collateral/optical/ps5724/ps2006/datasheet_c78-598521.html.

80-WXC-C Power Monitoring

The 80-WXC-C has two physical photodiodes and an OCM unit that monitors power at the different ports of the card. The following table describes the physical photodiodes.

Table 11: 80-WXC-C Port Calibration

Physical Photodiode	CTC Type Name	Calibrated to Port(s)
PD1	COM Total Power	COM
PD2	EXP-TX Total Power	EXP-TX
OCM1	EAD 1 Per-Channel and Total Power	EAD-1
OCM2	EAD 2 Per-Channel and Total Power	EAD-2
OCM3	EAD 3 Per-Channel and Total Power	EAD-3
OCM4	EAD 4 Per-Channel and Total Power	EAD-4
OCM5	EAD 5 Per-Channel and Total Power	EAD-5
OCM6	EAD 6 Per-Channel and Total Power	EAD-6
OCM7	EAD 7 Per-Channel and Total Power	EAD-7
OCM8	EAD 8 Per-Channel and Total Power	EAD-8

Physical Photodiode	CTC Type Name	Calibrated to Port(s)
OCM9	AD Per-Channel and Total Power	AD
OCM10	Output Per-Channel and Total Power	COM
OCM11	Input Per-Channel and Total Power	COM
OCM12	Drop Per-Channel and Total Power	DROP-TX

For information on the associated TL1 AIDs for the optical power monitoring points, see the “CTC Port Numbers and TL1 Aids” section in the *Cisco NCS 2000 Series TL1 Command Guide*.

Additionally, the 80-WXC-C has two virtual photodiodes. The following table lists the virtual photodiodes.

Table 12: 80-WXC-C Virtual Photodiode Port Calibration

Virtual Photodiode	CTC Type Name	Calibrated to Port(s)
VPD3	DROP-TX Total Power	DROP-TX
VPD4	COM-RX Total Power	COM-RX

80-WXC-C Channel Plan

The following table shows the 80 ITU-T 50-GHz-spaced, C-band channels (wavelengths) that are cross connected by the 80-WXC-C card.

Table 13: 80-WXC-C Channel Plan

Band ID	Channel Label	Frequency (THz)	Wavelength (nm)
Ch. 0[5]	-	196	1529.55

Band ID	Channel Label	Frequency (THz)	Wavelength (nm)
30.3	30.3	195.9	1530.33
	30.7	195.85	1530.72
	31.1	195.8	1531.12
	31.5	195.75	1531.51
	31.9	195.7	1531.90
	32.3	195.65	1532.29
	32.7	195.6	1532.68
	33.1	195.55	1533.07
	33.5	195.5	1533.47
	33.9	195.45	1533.86
34.3	34.3	195.4	1534.25
	34.6	195.35	1534.64
	35.0	195.3	1535.04
	35.4	195.25	1535.43
	35.8	195.2	1535.82
	36.2	195.15	1536.22
	36.6	195.1	1536.61
	37.0	195.05	1537
	37.4	195	1537.40
	37.8	194.95	1537.79

Band ID	Channel Label	Frequency (THz)	Wavelength (nm)
38.2	38.2	194.9	1538.19
	38.6	194.85	1538.58
	39.0	194.8	1538.98
	39.4	194.75	1539.37
	39.8	194.7	1539.77
	40.2	194.65	1540.16
	40.6	194.6	1540.56
	41.0	194.55	1540.95
	41.3	194.5	1541.35
	41.7	194.45	1541.75
42.1	42.1	194.4	1542.14
	42.5	194.35	1542.94
	42.9	194.3	1542.94
	43.3	194.25	1543.33
	43.7	194.2	1543.73
	44.1	194.15	1544.13
	44.5	194.1	1544.53
	44.9	194.05	1544.92
	45.3	194	1545.32
	45.7	193.95	1545.72

Band ID	Channel Label	Frequency (THz)	Wavelength (nm)
46.1	46.1	193.9	1546.12
	46.5	193.85	1546.52
	46.9	193.8	1546.92
	47.3	193.75	1547.32
	47.7	193.7	1547.72
	48.1	193.65	1548.11
	48.5	193.6	1548.51
	48.9	193.55	1548.91
	49.3	193.5	1549.32
	49.7	193.45	1549.72
50.1	50.1	193.4	1550.12
	50.5	193.35	1550.52
	50.9	193.3	1550.92
	51.3	193.25	1551.32
	51.7	193.2	1551.72
	52.1	193.15	1552.12
	52.5	193.1	1552.52
	52.9	193.05	1552.93
	53.3	193	1553.33
	53.7	192.95	1553.73

Band ID	Channel Label	Frequency (THz)	Wavelength (nm)
54.1	54.1	192.9	1554.13
	54.5	192.85	1554.54
	54.9	192.8	1554.94
	55.3	192.75	1555.34
	55.7	192.7	1555.75
	56.2	192.65	1556.15
	56.6	192.6	1556.55
	57.0	192.55	1556.96
	57.4	192.5	1557.36
	57.8	192.45	1557.77
58.2	58.2	192.4	1558.17
	58.6	192.35	1558.58
	59.0	192.3	1558.98
	59.4	192.25	1559.39
	59.8	192.2	1559.79
	60.2	192.15	1560.20
	60.6	192.1	1560.61
	61.0	192.05	1561.01
	61.4	192	1561.42
	61.8	191.95	1561.83

[5] This channel is unused by the 80-WXC-C

Related Procedures for 80-WXC-C Card

The following section lists procedures and tasks related to the configuration of the 80-WXC-C card:

- NTP-G140 Installing Fiber-Optic Cables Between Terminal, Hub, or ROADM Nodes

- NTP-G185 Installing Fiber-Optic Cables between Mesh Nodes
- NTP-G152 Creating and Verifying Internal Patchcords
- NTP-G37 Running Automatic Node Setup
- NTP-G59 Creating, Deleting, and Managing Optical Channel Network Connections
- NTP-G51 Verify DWDM Node Turn Up
- DLP-G141 View Optical Power Statistics for 32WSS, 32WSS-L, 32DMX, 40-WSS-C, 40-WSS-CE, 40-WXC-C, 80-WXC-C, 16-WXC-FS, 40-MUX-C, 40-DMX-C, and 40-DMX-CE Cards
- NTP-G174 Modifying Line Settings and PM Thresholds for 40-WXC-C, 80-WXC-C, or 16-WXC-FS Cards

16-WXC-FS Card

The 16-WXC-FS card is a double-slot cross connect card, tunable over 96 channels in the C-band, at 50-GHz spacing on the ITU-T grid. The card provides the flex spectrum capability, which allows the user the flexibility to allocate the channel bandwidth, to increase the network scalability. The channel bandwidth is not fixed, but can be defined arbitrarily, with a given granularity and within a given range. Attenuation and power values are defined for each sub-range. The central frequency ranges from 191'350 Ghz (1566 .72 nm) to 196'100 Ghz (1528 .77 nm).

The 16-WXC-FS card can be used in point-to-point, ring, multi-ring, or mesh topologies. The 16-WXC-FS card supports up to 16 directions for each ROADM node. The card is optically passive and provides bidirectional capability. It can be installed in slots 2, 4, or 6 in the Cisco NCS 2006 chassis. It is recommended that you use the 16-WXC-FS card in slot 4 when used with EDRA amplifiers to comply with optical safety. It is recommended that you use the 16-WXC-FS card and the EDRA-2-xx card in slots 2 and 4, 5 and 7, 8 and 10, 11 and 13 of the Cisco NCS 2015 chassis.

Important In the Cisco NCS 2006 chassis, the 16-WXC-FS card front panel has two compression latch devices. These latches enforce the position of the unit in the chassis. To insert or remove a card from the Cisco NCS 2006 chassis, rotate the compression latches fully in the anti-clockwise direction. After the card is inserted or removed, close the unit and rotate the compression latches fully in the clockwise direction.

For more information about the 16-WXC-FS card, see http://www.cisco.com/en/US/solutions/collateral/ns340/ns394/ns398/ns406/data_sheet_c78-729313.html

16-WXC-FS Ports

The 16-WXC-FS card has these ports:

- EXP-TX*i* (where *i* = 1 to 16)—The EXP TX port sends the split-off optical signal that contains pass-through channels to the other side of the NE. For example, in four degrees setup, the EXP ports can be used as drop Tx ports, EXP-Tx(1 to 4) are used as express channel from one side to other side. The 5th to 16th EXP-Tx ports are used to transmit the power to passive units.
- EXP-RX*i* (where *i* = 1 to 16)—The EXP RX port receives the optical signal from the pass-through channels. For example, in four degrees setup, the EXP ports can be used as drop Rx ports, EXP-Rx(1

to 4) are used to receive power from the express channel from one side to other. The 5th to 16th EXP-Rx ports are used to receive the power from the passive units.

- COM-TX—The COM TX port transmits the combined power from all directions or add drop ports towards the amplifier card.
- COM-RX—The COM RX port receives the optical signal from a preamplifier card and sends it to the optical cross connect.
- UPG-TX—The UPG TX port can be used to drop channels and transmits power to the preamplifier card. This port can also be used to increase the number of ports by connecting to another 16-WXC-FS card.
- UPG-RX-The UPG RX port can be used to add channels and receives power from the preamamplifer card. This port can also be used to increase the number of ports by connecting to another 16-WXC-FS card.

Two LC-duplex adapters are required to connect COM and UPG ports, and four MPO connectors to connect add/drop ports of the 16-WXC card. All the 16 I/O ports of the 16-WXC-FS card can be used either for node interconnection or for add/drop.

Key Features

The 16-WXC-FS card provides these features when used in multiplexer mode:

- The card allows you to select a single 50-GHz spaced channel or any combination of the aggregated 96 channels grid on the COM-TX port.
- The combination of input signals from the 16 EXP-RX ports and the UPG-RX port into COM-TX port.
- The selection of an arbitrary wavelength range or different wavelength ranges, with a common insertion loss value on the COM-TX port.
- Automatic VOA shutdown (AVS) blocking state on each wavelength on the COM-TX port.
- Per-channel (closed loop) power regulation on the COM-TX output port based on OCM block feedback.
- Per-channel (open loop) attenuation regulation on the EXP-TX output port, which is not based on the OCM feedback.

The 16-WXC-FS card provides these features when used in de-multiplexer mode:

- The card allows you to select a single 50-GHz spaced channel or any combination of the aggregated 96 channels grid on any of the 16 EXP-TX port.
- Splitting of the input signal from COM-RX port into a total of 16 EXP-TX ports and 1 UPG-TX port.
- AVS blocking state on each wavelength on any of the 16 EXP-TX ports.
- Per-channel (closed loop) power regulation on the EXP-TX output port based on OCM block feedback.
- Per-channel (open loop) attenuation regulation on the EXP-TX output port which is not based on the OCM feedback.
- Selection of an arbitrary wavelength range or of different wavelength ranges, with a common insertion loss value on any of the 16 EXP-TX ports.
- DWDM Optical amplifier(s) partially compensates the loss of couplers or splitters and wavelength blockers.

16-WXC-FS Power Monitoring

The 16-WXC-FS card has two physical photodiodes and an OCM unit that monitors power at the different ports of the card.

Table 14: 16-WXC-FS Port Calibration

Physical Photodiode	CTC Type Name	Calibrated to Port(s)
PD1	COM-RX Total Input Power	COM-RX
PD2	COM-TX Total Output Power	COM-TX
OCM1	COM-RX Per-Channel and Input Power	COM-RX
OCM2	COM-TX Per-Channel and Output Power	COM-TX
OCM3 to OCM18	De-MUX Output Ports	EXP-TX
OCM19 to OCM34	MUX Input Ports	EXP-RX
OCM35	De-MUX Output Ports	UPG-TX
OCM36	MUX Input Ports	UPG-RX

For information on associated TL1 AIDs for the optical power monitoring points, see the “CTC Port Numbers and TL1 Aids” section in the *Cisco NCS 2000 Series TL1 Command Guide*.

The OCM unit provides per-channel optical power monitoring on these ports:

- COM-TX and COM-RX ports
- UPG-TX and UPG-RX ports
- EXP-TX*i* (where *i* = 1 to 16) ports in output direction
- EXP-RX*i* (where *i* = 1 to 16) ports in input direction

Task Flow Diagram of 16-WXC-FS Card

Figure 5: Task Flow Diagram of 16-WXC-FS Card

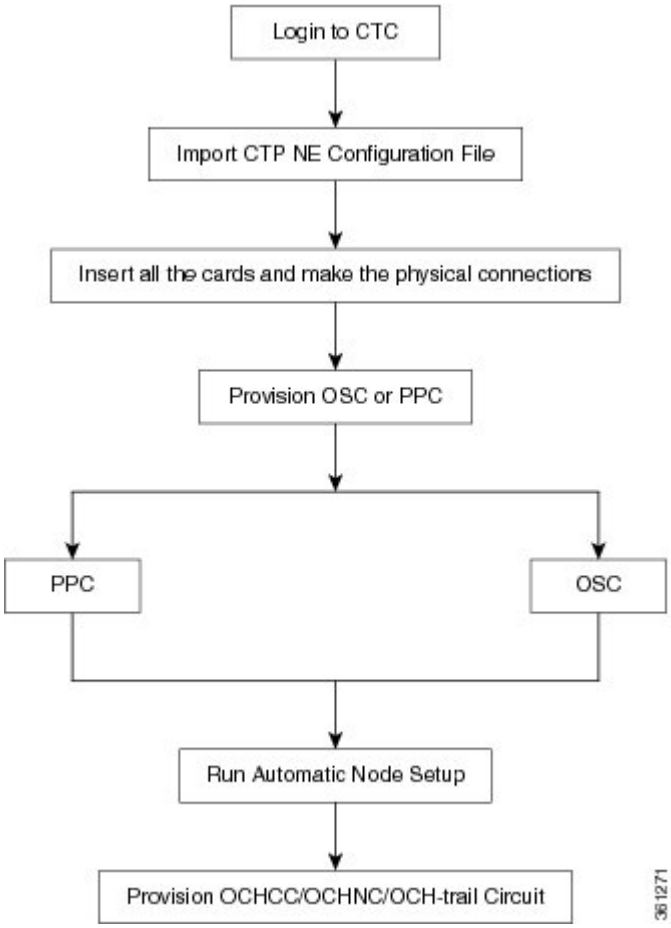

Related Procedures for 16-WXC-FS Card

The following section lists procedures and tasks related to the configuration of the 16-WXC-FS card:

- NTP-G140 Installing Fiber-Optic Cables Between Terminal, Hub, or ROADM Nodes
- NTP-G185 Installing Fiber-Optic Cables between Mesh Nodes
- NTP-G152 Creating and Verifying Internal Patchcords
- NTP-G37 Running Automatic Node Setup
- NTP-G59 Creating, Deleting, and Managing Optical Channel Network Connections
- NTP-G51 Verify DWDM Node Turn Up

- DLP-G141 View Optical Power Statistics for 32WSS, 32WSS-L, 32DMX, 40-WSS-C, 40-WSS-CE, 40-WXC-C, 80-WXC-C, 16-WXC-FS, 40-MUX-C, 40-DMX-C, and 40-DMX-CE Cards
- NTP-G174 Modifying Line Settings and PM Thresholds for 40-WXC-C, 80-WXC-C, or 16-WXC-FS Cards

Single Module ROADM (SMR-C) Cards

Note For 40-SMR1-C and 40-SMR2-C safety label information, see the Safety Labels.

The single-slot 40-channel single module ROADM (SMR-C) cards integrate the following functional blocks onto a single line card:

- Optical preamplifier
- Optical booster amplifier
- Optical service channel (OSC) filter
- 2x1 wavelength cross-connect (WXC) or a 4x1 WXC
- Optical channel monitor (OCM)

The SMR-C cards are available in two versions:

- 40-SMR1-C Card
- 40-SMR2-C Card

The SMR-C cards can manage up to 40 channels spaced at 100GHz on each port according to the channel grid in Table 10-10. The cards can be installed in Slots 1 to 6 and 12 to 17.

For more information about the 40-SMR1-C or 40-SMR2-C card, see http://www.cisco.com/en/US/prod/collateral/optical/ps5724/ps2006/data_sheet_c78-578552.html.

SMR-C Card Key Features

The optical amplifier units in the SMR-C cards provide the following features:

- Embedded gain flattening filter
- Mid-stage access for dispersion compensation unit (only applicable for preamplifier erbium-doped fiber amplifier [EDFA])
- Fixed output power mode
- Fixed gain mode
- Nondistorting low-frequency transfer function
- Amplified spontaneous emissions (ASE) compensation in fixed gain and fixed output power mode
- Fast transient suppression

- Programmable tilt (only applicable for preamplifier EDFA)
- Full monitoring and alarm handling capability
- Optical safety support through signal loss detection and alarm at any input port, fast power down control, and reduced maximum output power in safe power mode.
- EDFA section calculates the signal power, by taking into account the expected ASE power contribution to the total output power. The signal output power or the signal gain can be used as feedback signals for the EDFA pump power control loop.

The 1x2 WXC unit (40-SMR1-C card) provides the following features:

- Selection of individual wavelength of the aggregated 100GHz signal from either the EXP-RX or ADD-RX ports
- Automatic VOA shutdown (AVS) blocking state on each wavelength and port
- Per-channel power regulation based on external OCM unit
- Open loop path attenuation control for each wavelength and port

The 1x4 WXC unit (40-SMR2-C card) provides the following features:

- Selection of individual wavelength of the aggregated 100GHz signal from either the EXP*i*-RX (where *i* = 1, 2, 3) or ADD-RX ports
- Automatic VOA shutdown (AVS) blocking state on each wavelength and port
- Per-channel power regulation based on external OCM unit
- Open loop path attenuation control for each wavelength and port

The OCM unit provides per channel optical power monitoring at EXP-RX, ADD-RX, DROP-TX, and LINE-TX ports.

40-SMR1-C Card

The 40-SMR1-C card includes a 100Ghz 1x2 WXC unit with integrated preamplifier unit (single EDFA).

The 40-SMR1-C card has the following types of ports:

- MON RX: The MON RX port monitors power on the EXP-TX output port.
- MON TX: The MON TX port monitors power on the LINE-TX output port.
- DC RX: The DC RX port receives the optical signal from the dispersion compensating unit (DCU) and sends it to the second stage preamplifier input.
- DC TX: The DC TX port sends the optical signal from the first stage preamplifier output to the DCU.
- OSC RX: The OSC RX port is the OSC add input port.
- OSC TX: The OSC TX port is the OSC drop output port.
- ADD/DROP RX: The ADD RX port receives the optical signal from the multiplexer section of the NE and sends it to the 1x2 WXC unit.

- ADD/DROP TX: The DROP TX port sends the split off optical signal to the demultiplexer section of the NE.
- LINE RX: The LINE RX port is the input signal port.
- LINE TX: The LINE TX port is the output signal port.
- EXP RX: The EXP RX port receives the optical signal from the other side of the NE and sends it to the 1x2 WXC unit.
- EXP TX: The EXP TX port sends the split off optical signal that contains pass-through channels to the other side of the NE.

The following figure shows a block diagram of the 40-SMR1-C card.

Figure 6: 40-SMR1-C Block Diagram

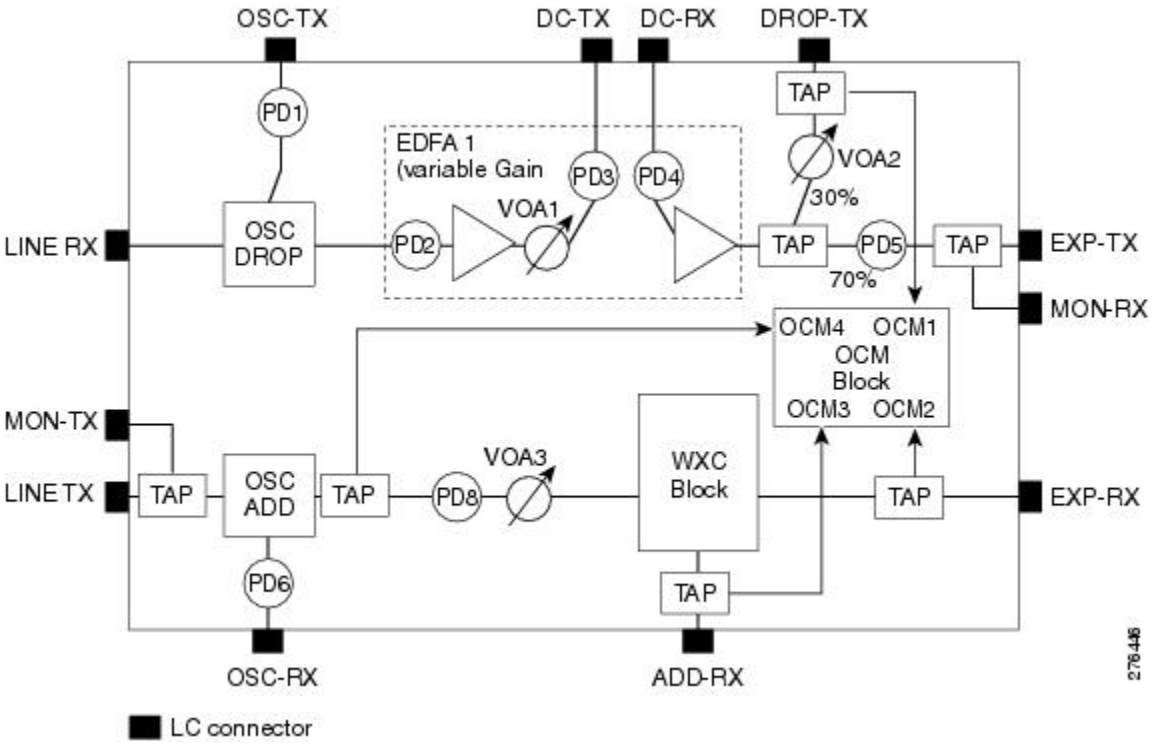

The different units of the 40-SMR1-C card are:

- OSC filter—The OSC filter allows to add an OSC channel to the C-band in the transmission path and to drop an OSC channel on the receiving path. The OSCM card that is connected to the OSC-TX and OSC-RX ports generates the OSC channel.
- Double-stage variable gain EDFA preamplifier—The double-stage preamplifier allows the insertion of a DCU between the DC-TX and DC-RX ports to compensate for chromatic dispersion. It is also equipped with built-in variable optical attenuator (VOA) and gain flattening filter (GFF) that provides tilt compensation and enables the use of this device over an extended range of span losses (5 dB to 35 dB).
- 70/30 splitter and VOA—The output signal from the preamplifier is split in a 70%-to-30% ratio, 70% is sent on the pass-through path (EXP-TX port) and 30% is sent on the drop path (DROP-TX port). The VOA equipped on the drop path is used to match the power range of the receiver photo diode without

the need for bulk attenuation. If a channel is expected to be dropped in the 40-SMR1-C card, the pass-through channel is stopped after the EXP-TX port either by a 40-WSS-C, 40-SMR1-C, or 40-SMR2-C card.

- 1x2 WXC—The 1x2 WXC aggregates on its output port a 100-GHz-spaced optical channel received from either its ADD-RX or EXP-RX port. In addition to the switching function, the 1x2 WXC allows to set a different per channel power for each of the managed wavelengths and also monitor the optical power.
- OCM—The OCM provides per channel power monitoring on the DROP-RX, EXP-RX, ADD-RX, and LINE-TX ports. The power value for each wavelength is refreshed after a variable timer depending on the port and card activity.

40-SMR1-C Power Monitoring

The 40-SMR1-C card has seven physical diodes (PD1 through PD6 and PD8) and an OCM unit that monitors power at the input and output ports of the card (see the following table).

Table 15: 40-SMR1-C Port Calibration

Physical Photodiode	CTC Type Name	Calibrated to Port(s)
PD1	LINE	LINE-RX
PD2	LINE	LINE-RX
PD3	DC	DC-TX
PD4	DC	DC-RX
PD5	EXP	EXP-TX
PD6	OSC	OSC-RX
PD8	LINE	LINE-TX
OCM1	LINE OCH	DROP-TX
OCM2	DROP OCH	EXP-RX
OCM3	ADD OCH	ADD-RX
OCM4	EXP OCH	LINE-TX

40-SMR1-C Channel Plan

Table 4: Channel Allocation Plan, on page 7 shows the 40 ITU-T 100-GHz-spaced, C-band channels (wavelengths) supported by the 40-SMR1-C card.

40-SMR2-C Card

The 40-SMR2-C card includes a 100Ghz 1x4 WXC unit with integrated preamplifier and booster amplifier units (double EDFA).

The 40-SMR2-C card has the following types of ports:

- MON RX: The MON RX port monitors power on the EXP-TX output port.
- MON TX: The MON TX port monitors power on the LINE-TX output port.
- DC RX: The DC RX port receives the optical signal from the dispersion compensating unit (DCU) and sends it to the second stage preamplifier input.
- DC TX: The DC TX port sends the optical signal from the first stage preamplifier output to the DCU.
- OSC RX: The OSC RX port is the OSC add input port.
- OSC TX: The OSC TX port is the OSC drop output port.
- ADD/DROP RX: The ADD RX port receives the optical signal from the multiplexer section of the NE and sends it to the 1x4 WXC unit.
- ADD/DROP TX: The DROP TX port sends the split off optical signal to the demultiplexer section of the NE.
- LINE RX: The LINE RX port is the input signal port.
- LINE TX: The LINE TX port is the output signal port.
- EXP TX: The EXP TX port sends the split off optical signal that contains pass-through channels to the other side of the NE.
- EXP*i*-RX (where *i* = 1, 2, 3): The EXP*i*-RX port receives the optical signal from the other side of the NE and sends it to the 1x4 WXC unit.

The following figure shows a block diagram of the 40-SMR2-C card.

Figure 7: 40-SMR2-C Block Diagram

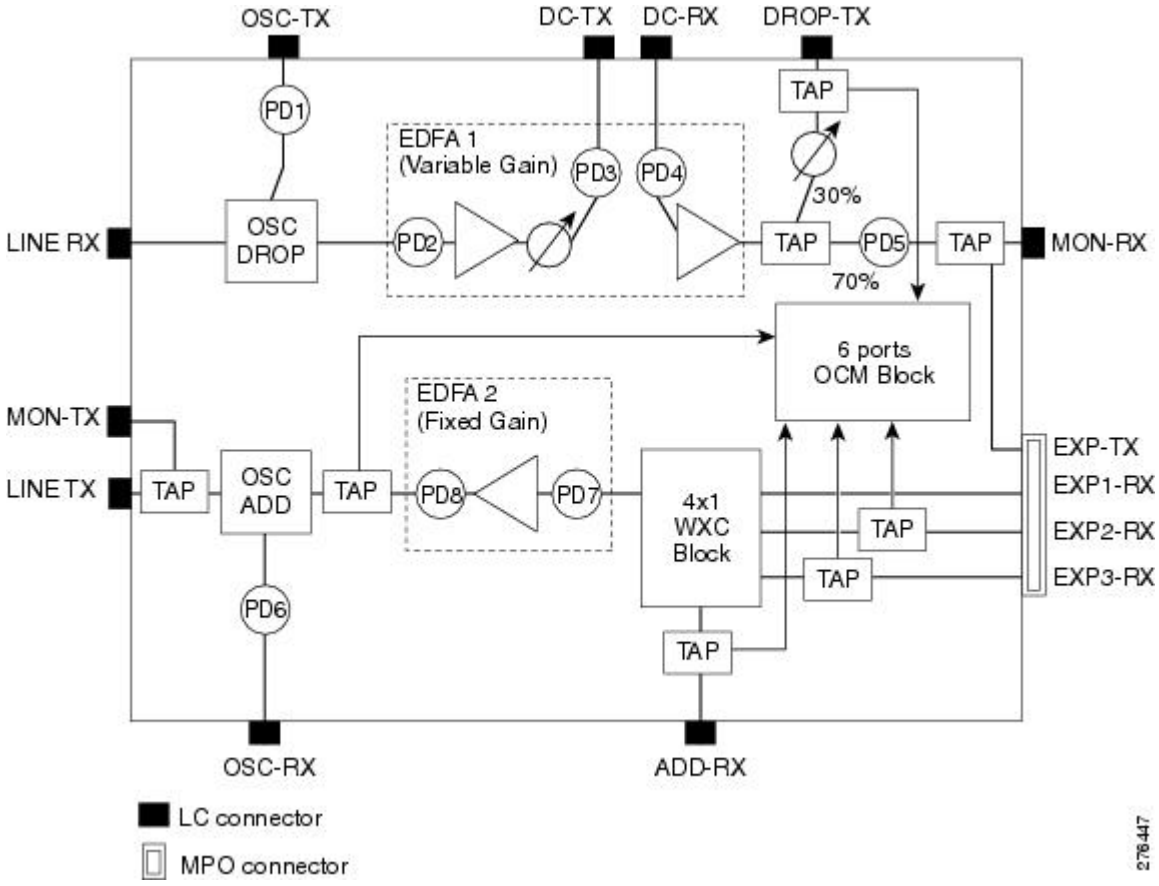

The different units of the 40-SMR2-C card are:

- OSC filter—The OSC filter allows to add an OSC channel to the C-band in the transmission path and to drop an OSC channel on the receiving path. The OSCM card that is connected to the OSC-TX and OSC-RX ports generates the OSC channel.
- Double-stage variable gain EDFA preamplifier—The double-stage preamplifier allows the insertion of a DCU between the DC-TX and DC-RX ports to compensate for chromatic dispersion. It is also equipped with built-in variable optical attenuator (VOA) and gain flattening filter (GFF) that provides tilt compensation and enables the use of this device over an extended range of span losses (5 dB to 35 dB).
- 70/30 splitter and VOA—The output signal from the preamplifier is split in a 70%-to-30% ratio, 70% is sent on the pass-through path (EXP-TX port) and 30% is sent on the drop path (DROP-TX port). The VOA equipped on the drop path is used to match the power range of the receiver photo diode without the need for bulk attenuation. If a channel is expected to be dropped in the 40-SMR2-C card, the pass-through channel is stopped after the EXP-TX port by a 40-WSS-C, 40-SMR1-C, or 40-SMR2-C card.
- 1x4 WXC—The 1x4 WXC aggregates on its output port a 100-GHz-spaced optical channel received from either its ADD-RX or EXP*i*-RX (where *i* = 1, 2, 3) port. In addition to the switching function, the

1x4 WXC allows to set a different per channel power for each of the managed wavelengths and also monitor the optical power.

- Single-stage fixed gain EDFA booster amplifier—The booster amplifier amplifies the output signal from the 1x4 WXC unit before transmitting it into the fiber. Since it is a fixed gain (17 dB) amplifier, it does not allow gain tilt control.
- OCM—The OCM provides per channel power monitoring on the DROP-RX, EXP*i*-RX (where *i* = 1, 2, 3), ADD-RX, and LINE-TX ports. The power value for each wavelength is refreshed after a variable timer depending on the port and card activity.

40-SMR2-C Power Monitoring

The 40-SMR2-C card has eight physical diodes (PD1 through PD8) and an OCM unit that monitors power at the input and output ports of the card (see the following table).

Table 16: 40-SMR2-C Port Calibration

Physical Photodiode	CTC Type Name	Calibrated to Port(s)
PD1	LINE	LINE-RX
PD2	LINE	LINE-RX
PD3	DC	DC-TX
PD4	DC	DC-RX
PD5	EXP	EXP-TX
PD6	OSC	OSC-RX
PD7	Not reported on CTC	Internal port
PD8	LINE	LINE-TX
OCM1	LINE OCH	LINE-TX
OCM2	DROP OCH	DROP-TX
OCM3	ADD OCH	ADD-RX
OCM4	EXP-1 OCH	EXP1-RX
OCM5	EXP-2 OCH	EXP2-RX
OCM6	EXP-3 OCH	EXP3-RX

40-SMR2-C Channel Plan

Table 4: Channel Allocation Plan, on page 7 shows the 40 ITU-T 100-GHz-spaced, C-band channels (wavelengths) supported by the 40-SMR2-C card.

Related Procedures for 40-SMR1-C and 40-SMR2-C Card

The following section lists procedures and tasks related to the configuration of the 40-SMR-1C and 40-SMR-2C cards:

- NTP-G140 Installing Fiber-Optic Cables Between Terminal, Hub, or ROADM Nodes
- NTP-G185 Installing Fiber-Optic Cables between Mesh Nodes
- NTP-G152 Creating and Verifying Internal Patchcords
- NTP-G37 Running Automatic Node Setup
- NTP-G243 Performing the Two-Degree ROADM Node with 40-SMR-1-C and OPT-AMP-17-C Cards Acceptance Test
- NTP-G244 Performing the Four Degree ROADM Node with 40-SMR-2-C Cards Acceptance Test
- NTP-G59 Creating, Deleting, and Managing Optical Channel Network Connections
- NTP-G51 Verify DWDM Node Turn Up
- DLP-G141 View Optical Power Statistics for 32WSS, 32WSS-L, 32DMX, 40-WSS-C, 40-WSS-CE, 40-WXC-C, 80-WXC-C, 16-WXC-FS, 40-MUX-C, 40-DMX-C, and 40-DMX-CE Cards
-
- NTP-G241 Modifying the Line Settings and PM Thresholds for 40-SMR1-C and 40-SMR2-C Cards

17 SMR9 FS, 24 SMR9 FS, 34 SMR9 FS, and SMR20 FS/SMR20 FS CV Cards

The 17 SMR9 FS, 24 SMR9 FS, 34 SMR9 FS, and SMR20 FS/SMR20 FS CV cards are tunable over 96 channels in the C-band, at 50-GHz spacing on the ITU-T grid. The cards provide the flex spectrum capability, which give the flexibility to allocate channel bandwidth, to increase the network scalability. The channel bandwidth is not fixed, but can be defined arbitrarily, with a specified granularity and within a given range. For each sub-range, attenuation and power values are defined. The central frequency ranges from 191350 Ghz (1566 .72 nm) to 196100 Ghz (1528 .77 nm).

The 17 SMR9 FS, 24 SMR9 FS, 34 SMR9 FS, and SMR20 FS/SMR20 FS CV cards are single-slot cards that integrate two cross-connect blocks (multiplexer and demultiplexer), a variable gain EDFA pre-amplifier, and a variable gain EDFA booster amplifier. In addition, the SMR20 FS CV card has a dedicated laser source at the demultiplexer section, and a photodiode at the multiplexer section; these support the connection verification capability. The 17 SMR9 FS, 24 SMR9 FS, and 34 SMR9 FS cards support up to 9 directions for each ROADM node. The SMR20 FS/SMR20 FS CV card support up to 20 directions for each ROADM node. The cards can be installed in any service slot in the Cisco NCS 2000 Series chassis. The cards can be used in point-to-point, ring, multi-ring, or mesh topologies.

The SMR20 FS CV cards provide the connection verification capability using a connectivity check signal. The correctness and the quality of the interconnections (determined by measuring the insertion loss of the

external passive path) can be validated with the connection verification feature in the cards . For more information about the connection verification, see *Connection Verification* section.

The EDFA pre-amplifier in SMR20 FS/SMR20 FS CV cards have switchable gain ranges. The following table describes the gain ranges and extended gain ranges of a EDFA pre-amplifier in the 17 SMR9 FS, 24 SMR9 FS, 34 SMR9 FS, and SMR20 FS/SMR20 FS CV cards.

Table 17: Gain Ranges and Extended Gain Ranges of EDFA Pre-Amplifier

Card	Gain Range	Extended Gain Range
17 SMR9 FS	0 - 17 dB with controlled tilt	20 dB with uncontrolled tilt
24 SMR9 FS	12 - 24 dB with controlled tilt	27 dB with uncontrolled tilt
34 SMR9 FS	20 - 34 dB with controlled tilt	40 dB with uncontrolled tilt
SMR20 FS/SMR20 FS CV	Gain Range 1: 0 - 17 dB with controlled tilt	20 dB with uncontrolled tilt
	Gain Range 2: 12 - 24 dB with controlled tilt	35 dB with uncontrolled tilt

For more information, such as the block diagrams and the card specifications of the 17 SMR9 FS, 24 SMR9 FS, 34 SMR9 FS, and SMR20 FS/SMR20 FS CV cards, see the data sheet.

SMR9 FS Ports

The SMR9 FS card has these ports:

- EXP-TX*i* (where *i* = 1 to 9)—The EXP TX port sends the split-off optical signal that contains pass-through channels to the other side of the NE. For example, in four degrees setup, the EXP ports can be used as drop Tx ports, EXP-Tx(1 to 4) are used as express channels from one side to other side. The 5th to 9th EXP-Tx ports are used to transmit power to passive units.
- EXP-RX*i* (where *i* = 1 to 9)—The EXP RX port receives the optical signal from the pass-through channels. For example, in the four degrees setup, the EXP ports can be used as drop Rx ports, EXP-Rx(1 to 4) are used to receive power from the express channel, from one side to other. The 5th to 9th EXP-Rx ports are used to receive power from passive units.
- OSC-TX— The OSC-TX port transmits the Service Channel signal received from the LINE-RX port signal, separating it from the C-Band signals.
- OSC-RX— The OSC-RX port receives signal from the Service Channel module and transmits it to the LINE-TX port.
- COM-TX—The COM TX port transmits the combined power from all the directions or add drop ports towards the amplifier.
- COM-RX— The COM RX port receives the optical signal from the pre-amplifier and sends it to the optical cross connect.

Note The COM-TX and COM-RX ports are not physical ports on the faceplate. These ports are represented in CTC.

- LINE-TX— The booster amplifier amplifies the composite signal coming from WXC-MUX towards the LINE-TX port.
- LINE-RX— The pre amplifier amplifies the composite signal coming from the LINE-RX port towards the WXC-DMX input.

SMR20 FS and SMR20 FS CV Ports

The SMR20 FS and SMR20 FS CV cards have these ports:

- EXP-TX*i* (where *i* = 1 to 20)—The EXP TX port sends the split-off optical signal that contains pass-through channels to the other side of the NE. For example, in the four degrees setup, the EXP ports can be used as drop Tx ports; EXP-Tx(1 to 4) are used as express channel from one side to other side. The 5th to 20th EXP-Tx ports are used to transmit power to passive units.
- EXP-RX*i* (where *i* = 1 to 20)—The EXP RX port receives the optical signal from the pass-through channels. For example, in the four degrees setup, the EXP ports can be used as add Rx ports, EXP-Rx(1 to 4) are used to receive power from the express channels from one side to other. The 5th to 20th EXP-Rx ports are used to receive power from passive units.
- OSC-TX— The OSC-TX port transmits the Service Channel signal received from the LINE-RX port signal, separating it from the C-Band signals.
- OSC-RX— The OSC-RX port receives signal from the Service Channel module and transmits it to the LINE-TX port.
- COM-TX—The COM TX port transmits the combined power from all the directions or add drop ports towards the booster amplifier.
- COM-RX— The COM RX port receives the optical signal from the pre-amplifier and sends it to the optical cross connect.

Note The COM-TX and COM-RX ports are not physical ports on the faceplate. These ports are represented in CTC.

- LINE-TX— The booster amplifier amplifies the composite signal coming from WXC-MUX towards the LINE-TX port.
- LINE-RX— The pre amplifier amplifies the composite signal coming from the LINE-RX port towards the WXC-DMX input.

Key Features

The multiplexer section of the 17 SMR9 FS, 24 SMR9 FS, 34 SMR9 FS, and SMR20 FS/SMR20 FS CV cards provide the following features:

- Selection of any arbitrary wavelength range from any EXP-RX*i* ports and routing to MUX output port.
- Automatic VOA shutdown (AVS) blocking state on each wavelength on the MUX output port.
- Per-channel (closed loop) power regulation on the MUX output port based on OCM block feedback.
- Per-channel (open loop) attenuation regulation on the MUX output port, which is not based on the OCM feedback.
- Amplification of the aggregated C-Band signal towards the LINE-TX port by the variable gain booster EDFA amplifier.
- Combination of C-Band signals with 1510 nm by OSC MUX filter.
- Detection of the connectivity check signal, of wavelength 97 nm, by an embedded photodiode.

The demultiplexer section of the 17 SMR9 FS, 24 SMR9 FS, 34 SMR9 FS, and SMR20 FS/SMR20 FS CV cards provide the following features:

- Selection of any arbitrary wavelength range and routing to any EXP-TX*i* port.
- AVS blocking state on each wavelength, on any of the EXP-TX*i* ports.
- Per-channel (closed loop) power regulation on the EXP-TX*i* output port based on OCM block feedback.
- Per-channel (open loop) attenuation regulation on the EXP-TX*i* output port, which is not based on the OCM feedback.
- Amplification of the C-Band signals entering the LINE-RX port by the pre-amplifier.
- Separation of C-Band signals from 1510 nm by OSC De-MUX filter.
- Generation and transmission of the connectivity check signal into the DE-MUX input port.

The 17 SMR9 FS, 24 SMR9 FS, 34 SMR9 FS, and SMR20 FS cards also support count-based licensing. For more information on licensing, see the *Cisco NCS 2000 Series Licensing Configuration Guide*.

Connection Verification

The SMR20 FS CV cards provide the connection verification feature. This feature measures power levels and verifies the optical cables and patchcords in a node for:

- Connectivity: Checks whether the cable is connected.
- Insertion Loss: Checks whether the cable loss is within expected value.

A 1567 nm connectivity check signal is generated and transmitted into the DE-MUX input port by a dedicated laser source. This signal, in turn, is detected by an embedded photo diode to complete the verification. The highlights of this feature are:

- It validates the SMR20 FS CV card connection with other nodes or local Add/Drop elements.
- It detects any incorrect cabling of the ROADM network element.
- It collects insertion losses of every possible optical path inside the network element, in order to predict any possible failure.

- It verifies the connection every six hours, by default. Refer to http://www.cisco.com/en/us/docs/optical/15000/10_0/network_configuration/guide/ns_network_configuration/ns_network_configuration_chapter_01000.html#task_8B1E0752B4A7EBCAC8FD09C02AC8 for manual validation of the SMR20 FS CV interconnections.

Connection Verification Prerequisites

The connection verification works only if the following conditions are fulfilled:

- Flex nodes must be present for the connection verification to work.
- Loopback caps must be installed on all the unused ports of the passive modules.
- At least one SMR20 FS CV card must be present in the node.
- All sides of the node must have a SMR20 FS CV card to test all cables and patchcords.
- All passive modules must be connected with an USB cable and associated, so that power readings can be calculated.

Supported Cards

The cards that supports connection verification are as follow:

- 16-AD-FS
- SMR20 FS CV
- MF-DEG-5 and MF-DEG-5-CV
- MF-MPO-16LC and MF-MPO-16LC-CV
- MF-PPMESH8-5AD
- MF-UPG-4 and MF-UPG-4-CV
- 100GC-CK-LC and 200G-CK-LC

Note

- Other MXP and TXP cards support CV partially; these cards support the CV for the patch cords belonging to paths going from TXP card trunk port to SMR20-FS-CV EXP-RX ports and not for the patch cords belonging to path in the opposite direction.
- MF-DEG-5, MF-DEG-5-CV, MF-MPO-16LC, MF-MPO-16LC-CV, MF-PPMESH8-5AD, MF-UPG-4, and MF-UPG-4-CV cards require loopback caps on unused ports. The (-CV) version is shipped with the loopback pre-installed.

Running the Connection Verification

The connection verification runs:

- Automatically at these time intervals and events:

- 20 minutes after first shelf controller boot or reboot
- One minute after enabling the connection verification
- Ten minutes after new patch-cord creation or deletion (*)
- Ten minutes after new circuit creation or deletion (*)
- Every six hours

- For manual execution of connection verification, refer to http://www.cisco.com/c/en/us/td/docs/optical/15000r10_0/ncs/network_config/guide/b_ncs_network_configuration/b_ncs_network_configuration_chapter_010000.html#task_8B1E07502B4A7EBCAC85FD09C02AC8.

(*) indicates that this condition occurs only after an automatic run is interrupted by the creation or deletion of a circuit or a patch cord.

PIDs of 17 SMR9 FS, 24 SMR9 FS, 34 SMR9 FS, and SMR20 FS/SMR20 FS CV Cards

The following table lists the PIDs and descriptions of the 17 SMR9 FS, 24 SMR9 FS, 34 SMR9 FS, and SMR20 FS/SMR20 FS CV cards.

PID	Description
NCS2K-9-SMR17FS=	9 port Single Module ROADM - 0-17 dB Gain - Flex Spectrum
NCS2K-9-SMR24FS=	9 port Single Module ROADM - 12-24 dB Gain - Flex Spectrum
NCS2K-9-SMR34FS=	9 port Single Module ROADM - 20-34 dB Gain - Flex Spectrum
NCS2K-20-SMRFS=	20 port Single Module ROADM - Switchable Gain - Flex Spectrum
NCS2K-20-SMRFS-CV=	20 port Single Module ROADM - Switchable Gain Flex Spectrum with Connection Verification
NCS2K-9-SMR17FS-L=	9 port Single Module ROADM - 0-17 dB Gain - Licensed
NCS2K-9-SMR24FS-L=	9 port Single Module ROADM - 12-24 dB Gain - Licensed
NCS2K-9-SMR34FS-L=	9 port Single Module ROADM - 20-34 dB Gain - Licensed
NCS2K-20-SMRFS-L=	20 port Single Module ROADM - Switchable Gain - Flex Spectrum - Licensed
L-NCS2K-SMR-FS=	License PID to enable Flex Spectrum capability for the 17 SMR9 FS, 24 SMR9 FS, 34 SMR9 FS, and SMR20 FS cards. NCS Flex package is required to use this license.
L-NCS2K-SMR-2P=	License PID to enable two EXP-TX/EXP-RX ports on the 17 SMR9 FS, 24 SMR9 FS, or 34 SMR9 FS cards.

PID	Description
L-NCS2K-SMR-4P=	License PID to enable four EXP-TX/EXP-RX ports on the SMR20 FS card.

Related Procedures for 17 SMR9 FS, 24 SMR9 FS, 34 SMR9 FS, and SMR20 FS/SMR20 FS CV Cards

The following section lists procedures and tasks related to the configuration of the 17 SMR9 FS, 24 SMR9 FS, 34 SMR9 FS, and SMR20 FS/SMR20 FS CV cards:

- DLP-G325 Changing Optical Amplifier Line Settings
- DLP-G326 Changing Optical Amplifier Threshold Settings
- DLP-G406 Changing Card Optical Channel Parameters for 40-WXC-C, 80-WXC-C, 16-WXC-FS, 17 SMR9 FS, 24 SMR9 FS, 34 SMR9 FS, SMR20 FS, or SMR20 FS CV Cards
- DLP-G407 Changing the Optical Channel Thresholds for 40-WXC-C, 80-WXC-C, 16-WXC-FS, 17 SMR9 FS, 24 SMR9 FS, 34 SMR9 FS, SMR20 FS, or SMR20 FS CV Cards
- DLP-G408 Changing Optical Line Parameters for 40-WXC-C, 80-WXC-C, 16-WXC-FS, 17 SMR9 FS, 24 SMR9 FS, 34 SMR9 FS, SMR20 FS, or SMR20 FS CV Cards
- DLP-G409 Changing the Optical Line Thresholds for 40-WXC-C, 80-WXC-C, 16-WXC-FS, 17 SMR9 FS, 24 SMR9 FS, 34 SMR9 FS, SMR20 FS, or SMR20 FS CV Cards
- DLP-G772 Viewing Wavelength Power for 16-WXC-FS, 17 SMR9 FS, 24 SMR9 FS, 34 SMR9 FS, SMR20 FS, or SMR20 FS CV Card
- DLP-G773 Creating a Flex Spectrum or ITU Circuit for 16-WXC-FS, 17 SMR9 FS, 24 SMR9 FS, 34 SMR9 FS, SMR20 FS, or SMR20 FS CV Card
- DLP-G140 View Power Statistics for Optical Amplifier, 40-SMR1-C, 40-SMR2-C, 17 SMR9 FS, 24 SMR9 FS, 34 SMR9 FS, SMR20 FS, and SMR20 FS CV Cards
- DLP-G141 View Optical Power Statistics for 32MUX-O, 32WSS, 32WSS-L, 32DMX-O,32DMX, 32DMX-L, 40-WSS-C, 40-WSS-CE, 40-WXC-C, 80-WXC-C, 16-WXC-FS, 17 SMR9 FS, 24 SMR9 FS, 34 SMR9 FS, SMR20 FS, SMR20 FS CV, 40-MUX-C, 40-DMX-C, and 40-DMX-CE Cards