ZTP over Layer 2

Table 1: Feature History Table

When a device boots up without any configuration, it is not possible to configure the VLAN to tag the DHCP request packets. Because ZTP is the first active process that runs before any router configuration is present or before any manual intervention, ZTP can either:

- Monitor a set of control packets to receive the VLAN IDs, or
- Be preconfigured with a set of VLAN IDs

Consider the following sample network:

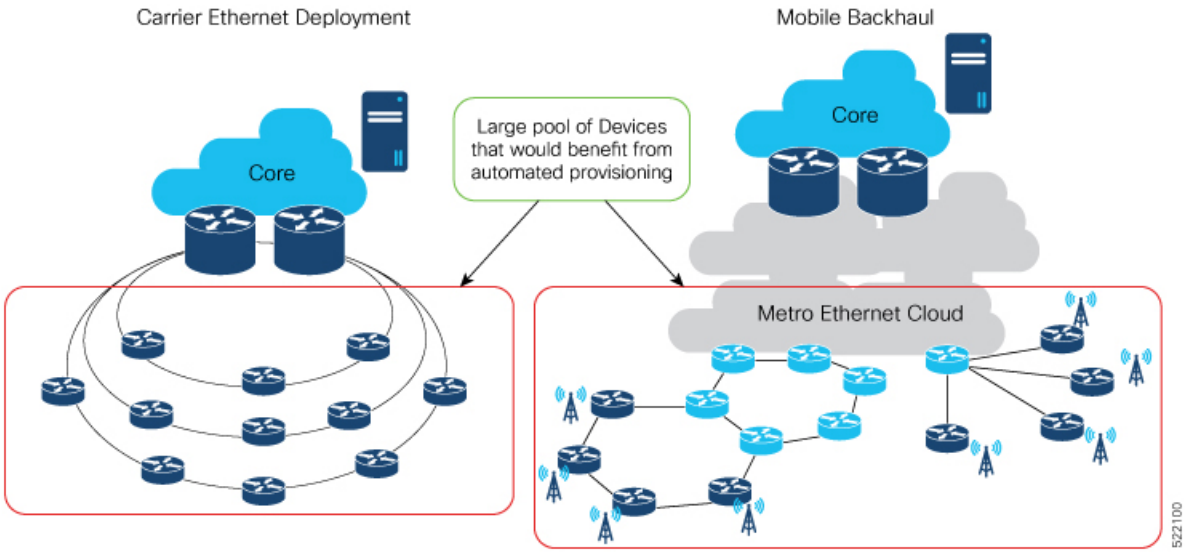

ZTP obtains VLAN details in one of the following ways:

1. Statically, by reading the options mentioned in ztp.ini file

Figure 1: Getting VLAN Details From ztp.ini File

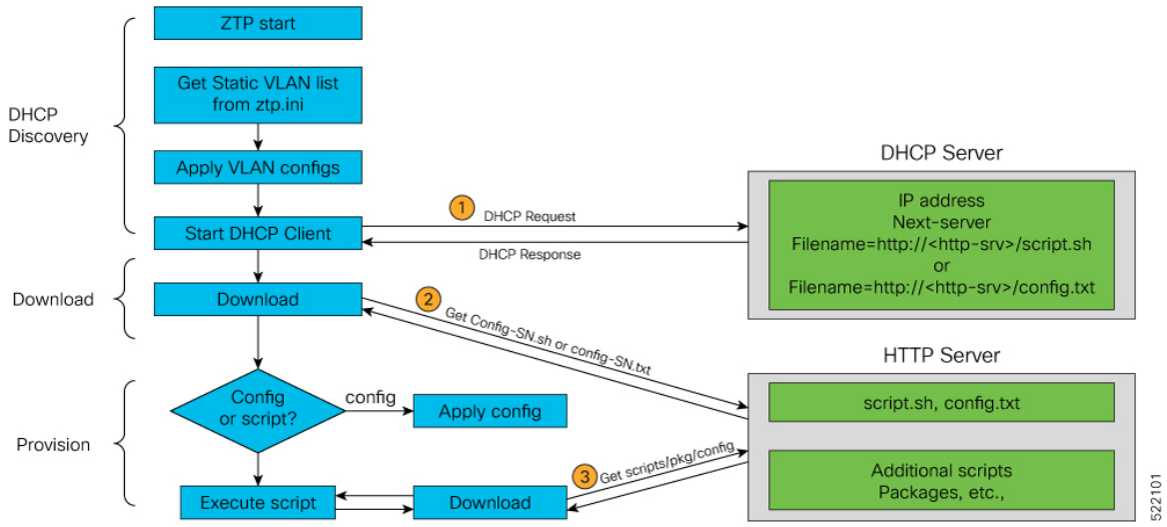

2. Dynamically, by snooping the packets in the netwok

Figure 2: Getting VLAN Details by Packet Snooping

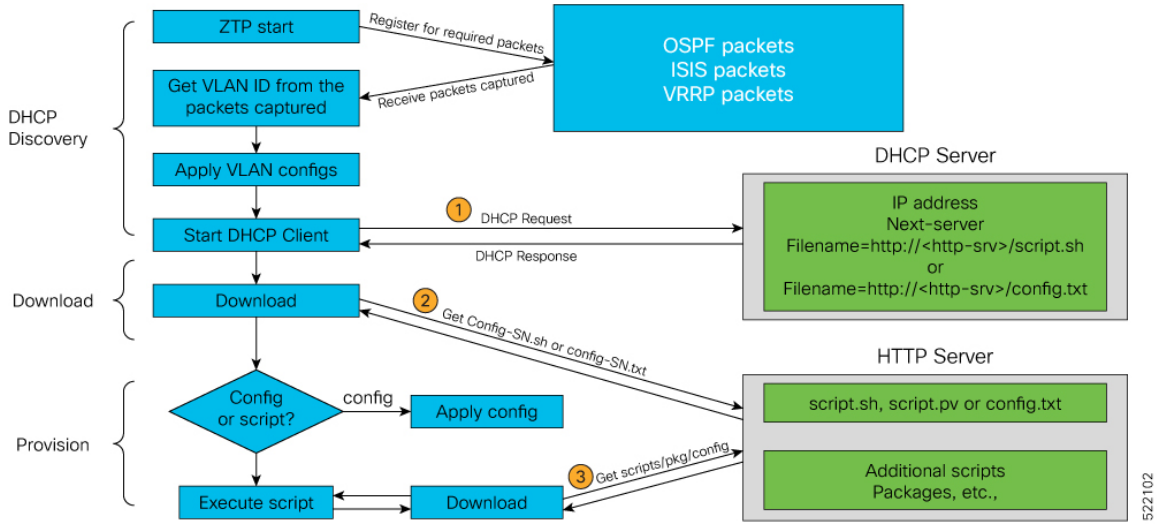

Note Dynamic VLAN workflow with snooping is supported only on a fresh boot or reload of the router.

• Prerequisites, on page 2
• Customizing the ztp.ini File, on page 3

Prerequisites

1. Only the following Layer 2 encapsulation protocols are supported:

a. DOT1Q
   1. Either inner VLAN ID
   2. Or only an outer VLAN ID

b. DOT1AD
   1. An outer VLAN ID and an inner VLAN ID.

      For more information, see the section *Configuring Layer 2 Encapsulation*.

2. ZTP processes packets only from the following protocols to detect the VLAN IDs:
   a. OSPF
   b. ISIS
   c. VRRP

Customizing the ztp.ini File

The ZTP configuration file is called the `ztp.ini`. This file defines a default sequential flow for ZTP.

To modify the ZTP configurable options, create a copy of the `ztp.ini` file in any location, for example, `/disk0:/ztp/` directory.

Note To reset to the default options, delete the ztp.ini file in the `/disk0:/ztp/` directory.

To include VLAN in the *ztp.ini* file, customize the `Fetcher Priority` attribute.

`Fetcher Priority` defines which port ZTP should use to get the provisioning details. By default, each port has a fetcher priority defined in the *ztp.ini* file. You can modify the default priority of the fetcher. Allowed range is from 0 to 9.

Note The lower the number, the higher the priority. The value 0 has the highest priority and 9 has the lowest priority.

By default, the USB port has the higher priority.

In this example, ZTP first sends IPv4 DHCP request on all the management ports. If there is a failure, then ZTP sends IPv6 DHCP request on all the management ports. Similarly, the same order is followed on all the data ports as well as for VLAN ports.

```
# Copyright (c) 2018-2020 by cisco Systems, Inc.
# All rights reserved.

[Startup]
start:         True
retry_forever: False

[Fetcher Priority]
```

```
usb:    0
Mgmt4:  1
Mgmt6:  2
DPort4: 3
DPort6: 4
Vlan4: 6
Vlan6: 7

[Vlan Options]          <--Vlan options can be set only if the vlan fetcher priority is
set.
snoop_packets: False    <-- a 'False' value sets up static VLAN; a 'True' value sets up
dynamic OSPF, ISIS, or VRRP packet snooping in the network.
vlan_type: dot1q
vlan_ids: 650
```

The other configurable options are:

- `ZTP`: Enable or disable ZTP at boot using CLI or by editing the *ztp.ini* file.
- `Retry`: Set the ZTP DHCP retry mechanism: The available values are infinite and once.
- `progress_bar`: Enable progress bar on the console. By default, the progress bar is disabled. To enable the progress bar, add the following entry in the `ztp.ini` file.

  ```
  [Options]
  progress_bar: True
  ```