Workflow and Use Case

Consider the following topology for configuring the G.8275.1:

Figure 1: Sample G.8275.1 Topology

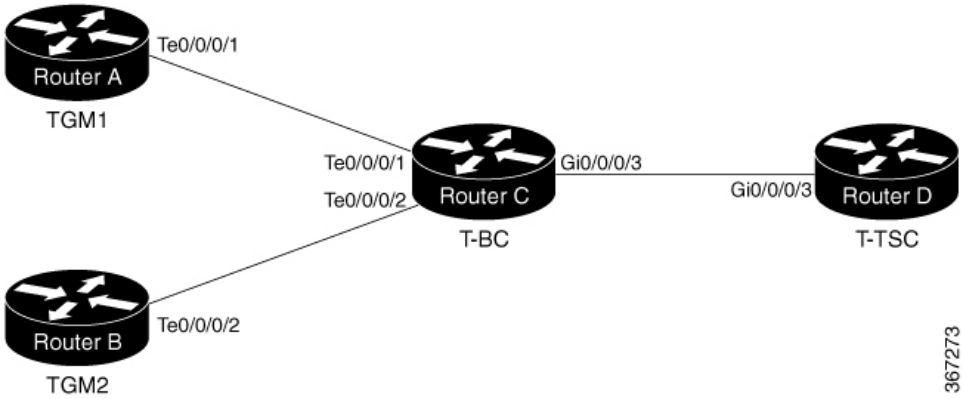

Configuration on TGM1

```
frequency synchronization
 quality itu-t option 1
 clock-interface timing-mode system
!
clock-interface sync 2 location 0/RP0/CPU0
 port-parameters
  gps-input tod-format cisco pps-input ttl
  !
 frequency synchronization
  selection input
  wait-to-restore 0
  quality receive exact itu-t option 1 PRC
!
ptp clock
domain 24
  profile g.8275.1 clock-type T-GM
 !
 profile master
  transport ethernet
  sync frequency 16
  announce frequency 8
  delay-request frequency 16
 !
interface GigabitEthernet0/0/0/1
```

```
 ptp
  profile master
  multicast target-address ethernet 01-1B-19-00-00-00
  port state master-only
  transport ethernet
  sync frequency 16
  announce frequency 8
  delay-request frequency 16
 !
 frequency synchronization
 !
```

Configuration on TGM2

```
frequency synchronization
 quality itu-t option 1
 clock-interface timing-mode system
!
clock-interface sync 2 location 0/RP0/CPU0
 port-parameters
  gps-input tod-format cisco pps-input ttl
  !
 frequency synchronization
  selection input
  wait-to-restore 0
  quality receive exact itu-t option 1 PRC
!
ptp clock
domain 24
  profile g.8275.1 clock-type T-BC
 !
 profile master
  transport ethernet
  sync frequency 16
  announce frequency 8
  delay-request frequency 16
!
interface GigabitEthernet0/0/0/2
 ptp
  profile master
  multicast target-address ethernet 01-1B-19-00-00-00
  port state master-only
  transport ethernet
  sync frequency 16
  announce frequency 8
  delay-request frequency 16
 !
 frequency synchronization
 !
```

Configuration on T-BC

```
frequency synchronization
 quality itu-t option 1
 clock-interface timing-mode system
!
ptp clock
domain 24
  profile g.8275.1 clock-type T-BC
 !
 profile slave
  transport ethernet
  sync frequency 16
  announce frequency 8
  delay-request frequency 16
```

```
 !
physical-layer frequency
!

 profile master
  transport ethernet
  sync frequency 16
  announce frequency 8
  delay-request frequency 16
! !
interface TenGigE0/0/0/1
 ptp
  profile slave
  multicast target-address ethernet 01-1B-19-00-00-00
  transport ethernet
  sync frequency 16
  local-priority 10
  announce frequency 8
  delay-request frequency 16
 !
 frequency synchronization
  selection input
  priority 1
  wait-to-restore 0
! !
interface TenGigE0/0/0/2
 ptp
  profile slave
  multicast target-address ethernet 01-1B-19-00-00-00
  transport ethernet
  port state any
  sync frequency 16
  local-priority 20
  announce frequency 8
  delay-request frequency 16
 !
 frequency synchronization
  selection input
  priority 1
  wait-to-restore 0
! !
interface GigabitEthernet0/0/0/3
 ptp
  profile master
  multicast target-address ethernet 01-1B-19-00-00-00
  transport ethernet
  port state any
  sync frequency 16
  announce frequency 8
  delay-request frequency 16
 !
 frequency synchronization
! !
```

Configuration on T-TSC

```
frequency synchronization
 quality itu-t option 1
 clock-interface timing-mode system
! ptp
 clock
  domain 24
  profile g.8275.1 clock-type T-TSC
 !
 profile slave
```

```
  transport ethernet
  sync frequency 16
  announce frequency 8
  delay-request frequency 16
!
physical-layer frequency
!
!
interface GigabitEthernet0/0/0/3
 ptp
  profile slave
  multicast target-address ethernet 01-1B-19-00-00-00
  transport ethernet
  port state slave-only
  local-priority 10
 !
 frequency synchronization
  selection input
  priority 1
  wait-to-restore 0
!
```