Configure Segment Routing for BGP

Border Gateway Protocol (BGP) is an Exterior Gateway Protocol (EGP) that allows you to create loop-free inter-domain routing between autonomous systems. An autonomous system is a set of routers under a single technical administration. Routers in an autonomous system can use multiple Interior Gateway Protocols (IGPs) to exchange routing information inside the autonomous system and an EGP to route packets outside the autonomous system.

This module provides the configuration information used to enable Segment Routing for BGP.

Note For additional information on implementing BGP on your router, see the *BGP Configuration Guide for Cisco NCS 5500 Series Routers*.

Segment Routing for BGP

In a traditional BGP-based data center (DC) fabric, packets are forwarded hop-by-hop to each node in the autonomous system. Traffic is directed only along the external BGP (eBGP) multipath ECMP. No traffic engineering is possible.

In an MPLS-based DC fabric, the eBGP sessions between the nodes exchange BGP labeled unicast (BGP-LU) network layer reachability information (NLRI). An MPLS-based DC fabric allows any leaf (top-of-rack or border router) in the fabric to communicate with any other leaf using a single label, which results in higher packet forwarding performance and lower encapsulation overhead than traditional BGP-based DC fabric. However, since each label value might be different for each hop, an MPLS-based DC fabric is more difficult to troubleshoot and more complex to configure.

BGP has been extended to carry segment routing prefix-SID index. BGP-LU helps each node learn BGP prefix SIDs of other leaf nodes and can use ECMP between source and destination. Segment routing for BGP

simplifies the configuration, operation, and troubleshooting of the fabric. With segment routing for BGP, you can enable traffic steering capabilities in the data center using a BGP prefix SID.

Note **BGP flowspec support with SRv6 - Limitations**

List of BGP address families interacts with SRv6. There are some supported and unsupported BGP address family for the interaction with SRv6.

- address-families ipv6.

Unsupported address families:

Configure BGP Prefix Segment Identifiers

Segments associated with a BGP prefix are known as BGP prefix SIDs. The BGP prefix SID is global within a segment routing or BGP domain. It identifies an instruction to forward the packet over the ECMP-aware best-path computed by BGP to the related prefix. The BGP prefix SID is manually configured from the segment routing global block (SRGB) range of labels.

Each BGP speaker must be configured with an SRGB using the **segment-routing global-block** command. See the About the Segment Routing Global Block section for information about the SRGB.

Note You must enable SR and explicitly configure the SRGB before configuring SR BGP. The SRGB must be explicitly configured, even if you are using the default range (16000 – 23999). BGP uses the SRGB and the index in the BGP prefix-SID attribute of a learned BGP-LU advertisement to allocate a local label for a given destination.

If SR and the SRGB are enabled after configuring BGP, then BGP is not aware of the SRGB, and therefore it allocates BGP-LU local labels from the dynamic label range instead of from the SRGB. In this case, restart the BGP process in order to allocate BGP-LU local labels from the SRGB.

Note Because the values assigned from the range have domain-wide significance, we recommend that all routers within the domain be configured with the same range of values.

To assign a BGP prefix SID, first create a routing policy using the **set label-index** *index* attribute, then associate the index to the node.

Note A routing policy with the **set label-index** attribute can be attached to a network configuration or redistribute configuration. Other routing policy language (RPL) configurations are possible. For more information on routing policies, refer to the "Implementing Routing Policy" chapter in the *Routing Configuration Guide for Cisco NCS 5500 Series Routers*.

Example

The following example shows how to configure the SRGB, create a BGP route policy using a $SID parameter and **set label-index** attribute, and then associate the prefix-SID index to the node.

```
RP/0/RSP0/CPU0:router(config)# segment-routing global-block 16000 23999

RP/0/RSP0/CPU0:router(config)# route-policy SID($SID)
RP/0/RSP0/CPU0:router(config-rpl)# set label-index $SID
RP/0/RSP0/CPU0:router(config-rpl)# end policy

RP/0/RSP0/CPU0:router(config)# router bgp 1
RP/0/RSP0/CPU0:router(config-bgp)# bgp router-id 10.1.1.1
RP/0/RSP0/CPU0:router(config-bgp)# address-family ipv4 unicast
RP/0/RSP0/CPU0:router(config-bgp-af)# network 10.1.1.3/32 route-policy SID(3)
RP/0/RSP0/CPU0:router(config-bgp-af)# allocate-label all
RP/0/RSP0/CPU0:router(config-bgp-af)# commit
RP/0/RSP0/CPU0:router(config-bgp-af)# end


RP/0/RSP0/CPU0:router# show bgp 10.1.1.3/32
BGP routing table entry for 10.1.1.3/32
Versions:
  Process           bRIB/RIB  SendTblVer
  Speaker                 74          74
    Local Label: 16003
Last Modified: Sep 29 19:52:18.155 for 00:07:22
Paths: (1 available, best #1)
  Advertised to update-groups (with more than one peer):
    0.2
  Path #1: Received by speaker 0
  Advertised to update-groups (with more than one peer):
    0.2
  3
    99.3.21.3 from 99.3.21.3 (10.1.1.3)
      Received Label 3
      Origin IGP, metric 0, localpref 100, valid, external, best, group-best
      Received Path ID 0, Local Path ID 1, version 74
      Origin-AS validity: not-found
      Label Index: 3
```

Segment Routing Egress Peer Engineering

Segment routing egress peer engineering (EPE) uses a controller to instruct an ingress provider edge, or a content source (node) within the segment routing domain, to use a specific egress provider edge (node) and a specific external interface to reach a destination. BGP peer SIDs are used to express source-routed inter-domain paths.

Below are the BGP-EPE peering SID types:

- PeerNode SID—To an eBGP peer. Pops the label and forwards the traffic on any interface to the peer.
- PeerAdjacency SID—To an eBGP peer via interface. Pops the label and forwards the traffic on the related interface.
- PeerSet SID—To a set of eBGP peers. Pops the label and forwards the traffic on any interface to the set of peers. All the peers in a set might not be in the same AS.

Multiple PeerSet SIDs can be associated with any combination of PeerNode SIDs or PeerAdjacency SIDs.

The controller learns the BGP peer SIDs and the external topology of the egress border router through BGP-LS EPE routes. The controller can program an ingress node to steer traffic to a destination through the egress node and peer node using BGP labeled unicast (BGP-LU).

EPE functionality is only required at the EPE egress border router and the EPE controller.

Usage Guidelines and Limitations

- When enabling BGP EPE, you must enable MPLS encapsulation on the egress interface connecting to the eBGP peer. This can be done by enabling either BGP labeled unicast (BGP-LU) address family or MPLS static for the eBGP peer.

  For information about BGP-LU, refer to the "Implementing BGP" chapter in the *BGP Configuration Guide for Cisco NCS 5500 Series Routers*.

  For information about MPLS static, refer to the "Implementing MPLS Static Labeling chapter in the *MPLS Configuration Guide for NCS 5500 Series Routers Series Routers*.

- When configuring SRv6 BGP with stitching and non-stitching VRFs between the same peers, you must enable the CLI knob **label mode per-nexthop-received-label** to avoid GRID full memory error while scaling the non-stitching VRFs. The stitching-VRF is used in SRv6 Interworking Gateway case (IW-GW)

- Note the following points related to the Ip-lookup backup support for EPEs:
  - This feature works only when you enable the **epe backup enable**, under the Global Address Family ID (AFI).
  - With this feature, an IP-Lookup backup is installed for each Egress Peer Engineering. This means, when all the paths of that EPE go down, the Forwarding Information Base (FIB) table searches in the IP table for the destination IP address in the data packet and forwards them accordingly.
  - The peer-set EPEs have a backup installed only when the mentioned CLI knob is enabled.

Configure Segment Routing Egress Peer Engineering

This task explains how to configure segment routing EPE on the EPE egress node.

SUMMARY STEPS

1. **router bgp** *as-number*
2. **neighbor** *ip-address*
3. **remote-as** *as-number*
4. **egress-engineering**
5. **exit**
6. **mpls static**
7. **interface** *type interface-path-id*
8. Use the **commit** or **end** command.

DETAILED STEPS

	Command or Action	Purpose
Step 1	**router bgp** *as-number* **Example:** `RP/0/RSP0/CPU0:router(config)# router bgp 1`	Specifies the BGP AS number and enters the BGP configuration mode, allowing you to configure the BGP routing process.
Step 2	**neighbor** *ip-address* **Example:** `RP/0/RSP0/CPU0:router(config-bgp)# neighbor 192.168.1.3`	Places the router in neighbor configuration mode for BGP routing and configures the neighbor IP address as a BGP peer.
Step 3	**remote-as** *as-number* **Example:** `RP/0/RSP0/CPU0:router(config-bgp-nbr)# remote-as 3`	Creates a neighbor and assigns a remote autonomous system number to it.
Step 4	**egress-engineering** **Example:** `RP/0/RSP0/CPU0:router(config-bgp-nbr)# egress-engineering`	Configures the egress node with EPE for the eBGP peer.

Step 5	**exit**
	Example:
	`RP/0/RSP0/CPU0:router(config-bgp-nbr)# exit`
	`RP/0/RSP0/CPU0:router(config-bgp)# exit`
	`RP/0/RSP0/CPU0:router(config)#`	

Step 6	**mpls static** **Example:** `RP/0/RSP0/CPU0:router(config)# mpls static`	Configure MPLS static on the egress interface connecting to the eBGP peer.
Step 7	**interface** *type interface-path-id* **Example:** `RP/0/RSP0/CPU0:router(config-mpls-static)# interface GigabitEthernet0/0/1/2`	Specifies the egress interface connecting to the eBGP peer.

	Command or Action	Purpose
Step 8	Use the **commit** or **end** command.	**commit** —Saves the configuration changes and remains within the configuration session. **end** —Prompts user to take one of these actions: • **Yes** — Saves configuration changes and exits the configuration session. • **No** —Exits the configuration session without committing the configuration changes. • **Cancel** —Remains in the configuration session, without committing the configuration changes.

Example

Running Config:

```
router bgp 1
 neighbor 192.168.1.3
  remote-as 3
  egress-engineering
  !
 !
mpls static
 interface GigabitEthernet0/0/1/2
 !
!
```

Configuring Manual BGP-EPE Peering SIDs

Configuring manual BGP-EPE Peer SIDs allows for persistent EPE label values. Manual BGP-EPE SIDs are advertised through BGP-LS and are allocated from the Segment Routing Local Block (SRLB). See Configure Segment Routing Global Block and Segment Routing Local Block for information about the SRLB.

Each PeerNode SID, PeerAdjacency SID, and PeerSet SID is configured with an index value. This index serves as an offset from the configured SRLB start value and the resulting MPLS label (SRLB start label + index) is assigned to these SIDs. This label is used by CEF to perform load balancing across the individual BGP PeerSet SIDs, BGP PeerNode SID, or ultimately across each first-hop adjacency associated with that BGP PeerNode SID or BGP PeerSet SID.

Configuring Manual PeerNode SID

Each eBGP peer will be associated with a PeerNode SID index that is configuration driven.

```
RP/0/0/CPU0:PE1(config)# router bgp 10
RP/0/0/CPU0:PE1(config-bgp)# neighbor 10.10.10.2
RP/0/0/CPU0:PE1(config-bgp-nbr)# remote-as 20
RP/0/0/CPU0:PE1(config-bgp-nbr)# egress-engineering
RP/0/0/CPU0:PE1(config-bgp-nbr)# peer-node-sid index 600
```

Configuring Manual PeerAdjacency SID

Any first-hop for which an adjacency SID is configured needs to be in the resolution chain of at least one eBGP peer that is configured for egress-peer engineering. Otherwise such a kind of "orphan" first-hop with regards to BGP has no effect on this feature. This is because BGP only understands next-hops learnt by the BGP protocol itself and in addition only the resolving IGP next-hops for those BGP next-hops.

```
RP/0/0/CPU0:PE1(config)# router bgp 10
RP/0/0/CPU0:PE1(config-bgp)# adjacencies
RP/0/0/CPU0:PE1(config-bgp-adj)# 10.1.1.2
RP/0/0/CPU0:PE1(config-bgp-adj)# adjacency-sid index 500
```

Configuring Manual PeerSet SID

The PeerSet SID is configured under global Address Family. This configuration results in the creation of a Peer-Set SID EPE object.

```
RP/0/0/CPU0:PE1(config)# router bgp 10
RP/0/0/CPU0:PE1(config-bgp)# address-family ipv4 unicast
RP/0/0/CPU0:PE1(config-bgp-afi)# peer-set-id 1
RP/0/0/CPU0:PE1(config-bgp-peer-set)# peer-set-sid 300
```

Example

Topology

The example in this section uses the following topology.

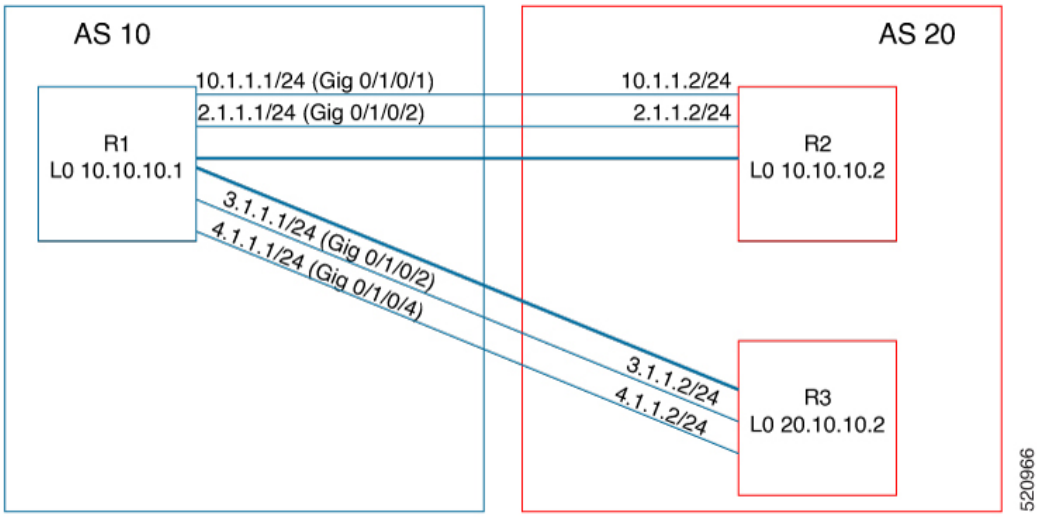

In this example, BGP-EPE peer SIDs are allocated from the default SRLB label range (15000 – 15999). The BGP-EPE peer SIDs are configured as follows:

- PeerNode SIDs to 10.10.10.2 with index 600 (label 15600), and for 20.10.10.2 with index 700 (label 15700)
- PeerAdj SID to link 10.1.1.2 with index 500 (label 15500)
- PeerSet SID 1 to load balance over BGP neighbors 10.10.10.1 and 20.10.10.2 with SID index 300 (label 15300)

- PeerSet SID 2 to load balance over BGP neighbor 20.10.10.2 and link 10.1.1.2 with SID index 400 (label 15400)

Configuration on R1

```
router bgp 10
 address-family ipv4 unicast
  peer-set-id 1
   peer-set-sid index 300
  !
  peer-set-id 2
   peer-set-sid index 400
  !
 !
 adjacencies
  10.1.1.2
   adjacency-sid index 500
   peer-set 2
  !
 !
 neighbor 10.10.10.2
  remote-as 20
  egress-engineering
  peer-node-sid index 600
  peer-set 1
 !
 neighbor 20.10.10.2
  egress-engineering
  peer-node-sid index 700
  peer-set 1
  peer-set 2
 !
```

To further show the load balancing of this example:

- 15600 is load balanced over {10.1.1.1 and 2.1.1.1}
- 15700 is load balanced over {3.1.1.1 and 4.1.1.1}
- 15500 is load balanced over {10.1.1.1}
- 15300 is load balanced over {10.1.1.1, 2.1.1.1, 3.1.1.1 and 4.1.1.1}
- 15400 is load balanced over {10.1.1.1, 3.1.1.1 and 4.1.1.1}

Configure BGP Link-State

BGP Link-State (LS) is an Address Family Identifier (AFI) and Sub-address Family Identifier (SAFI) originally defined to carry interior gateway protocol (IGP) link-state information through BGP. The BGP Network Layer Reachability Information (NLRI) encoding format for BGP-LS and a new BGP Path Attribute called the BGP-LS attribute are defined in RFC7752. The identifying key of each Link-State object, namely a node, link, or prefix, is encoded in the NLRI and the properties of the object are encoded in the BGP-LS attribute.

The BGP-LS Extensions for Segment Routing are documented in RFC9085.

BGP-LS applications like an SR Path Computation Engine (SR-PCE) can learn the SR capabilities of the nodes in the topology and the mapping of SR segments to those nodes. This can enable the SR-PCE to perform

path computations based on SR-TE and to steer traffic on paths different from the underlying IGP-based distributed best-path computation.

The following figure shows a typical deployment scenario. In each IGP area, one or more nodes (BGP speakers) are configured with BGP-LS. These BGP speakers form an iBGP mesh by connecting to one or more route-reflectors. This way, all BGP speakers (specifically the route-reflectors) obtain Link-State information from all IGP areas (and from other ASes from eBGP peers).

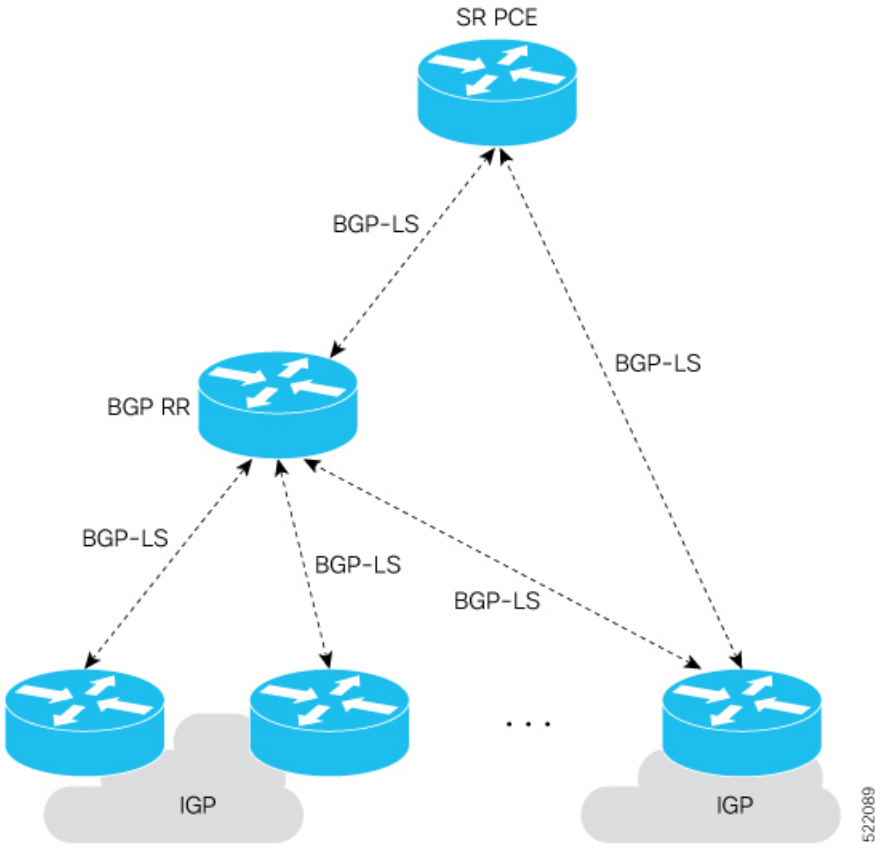

Usage Guidelines and Limitations

- BGP-LS supports IS-IS and OSPFv2.
- The identifier field of BGP-LS (referred to as the Instance-ID) identifies the IGP routing domain where the NLRI belongs. The NLRIs representing link-state objects (nodes, links, or prefixes) from the same IGP routing instance must use the same Instance-ID value.
- When there is only a single protocol instance in the network where BGP-LS is operational, we recommend configuring the Instance-ID value to **0**.
- Assign consistent BGP-LS Instance-ID values on all BGP-LS Producers within a given IGP domain.
- NLRIs with different Instance-ID values are considered to be from different IGP routing instances.
- Unique Instance-ID values must be assigned to routing protocol instances operating in different IGP domains. This allows the BGP-LS Consumer (for example, SR-PCE) to build an accurate segregated multi-domain topology based on the Instance-ID values, even when the topology is advertised via BGP-LS by multiple BGP-LS Producers in the network.

- If the BGP-LS Instance-ID configuration guidelines are not followed, a BGP-LS Consumer may see duplicate link-state objects for the same node, link, or prefix when there are multiple BGP-LS Producers deployed. This may also result in the BGP-LS Consumers getting an inaccurate network-wide topology.
- The following table defines the supported extensions to the BGP-LS address family for carrying IGP topology information (including SR information) via BGP. For more information on the BGP-LS TLVs, refer to Border Gateway Protocol - Link State (BGP-LS) Parameters.

Table 1: IOS XR Supported BGP-LS Node Descriptor, Link Descriptor, Prefix Descriptor, and Attribute TLVs

TLV Code Point	Description	Produced by IS-IS	Produced by OSPFv2	Produced by BGP
256	Local Node Descriptors	X	X	—
257	Remote Node Descriptors	X	X	—
258	Link Local/Remote Identifiers	X	X	—
259	IPv4 interface address	X	X	—
260	IPv4 neighbor address	X		
261	IPv6 interface address	X	—	—
262	IPv6 neighbor address	X	—	—
263	Multi-Topology ID	X	—	—
264	OSPF Route Type	—	X	—
265	IP Reachability Information	X	X	—
266	Node MSD TLV	X	X	—
267	Link MSD TLV	X	X	—
512	Autonomous System	—	—	X
513	BGP-LS Identifier	—	—	X
514	OSPF Area-ID	—	X	—
515	IGP Router-ID	X	X	—
516	BGP Router-ID TLV	—	—	X
517	BGP Confederation Member TLV	—	—	X
1024	Node Flag Bits	X	X	—
1026	Node Name	X	X	—
1027	IS-IS Area Identifier	X	—	—
1028	IPv4 Router-ID of Local Node	X	X	—
1029	IPv6 Router-ID of Local Node	X	—	—
1030	IPv4 Router-ID of Remote Node	X	X	—
1031	IPv6 Router-ID of Remote Node	X	—	—

TLV Code Point	Description	Produced by IS-IS	Produced by OSPFv2	Produced by BGP
1034	SR Capabilities TLV	X	X	—
1035	SR Algorithm TLV	X	X	—
1036	SR Local Block TLV	X	X	—
1039	Flex Algo Definition (FAD) TLV	X	X	—
1044	Flex Algorithm Prefix Metric (FAPM) TLV	X	X	—
1088	Administrative group (color)	X	X	—
1089	Maximum link bandwidth	X	X	—
1090	Max. reservable link bandwidth	X	X	—
1091	Unreserved bandwidth	X	X	—
1092	TE Default Metric	X	X	—
1093	Link Protection Type	X	X	—
1094	MPLS Protocol Mask	X	X	—
1095	IGP Metric	X	X	—
1096	Shared Risk Link Group	X	X	—
1099	Adjacency SID TLV	X	X	—
1100	LAN Adjacency SID TLV	X	X	—
1101	PeerNode SID TLV	—	—	X
1102	PeerAdj SID TLV	—	—	X
1103	PeerSet SID TLV	—	—	X
1114	Unidirectional Link Delay TLV	X	X	—
1115	Min/Max Unidirectional Link Delay TLV	X	X	—
1116	Unidirectional Delay Variation TLV	X	X	—
1117	Unidirectional Link Loss	X	X	—
1118	Unidirectional Residual Bandwidth	X	X	—
1119	Unidirectional Available Bandwidth	X	X	—
1120	Unidirectional Utilized Bandwidth	X	X	—
1122	Application-Specific Link Attribute TLV	X	X	—
1152	IGP Flags	X	X	—
1153	IGP Route Tag	X	X	—
1154	IGP Extended Route Tag	X	—	—
1155	Prefix Metric	X	X	—

TLV Code Point	Description	Produced by IS-IS	Produced by OSPFv2	Produced by BGP
1156	OSPF Forwarding Address	—	X	—
1158	Prefix-SID	X	X	—
1159	Range	X	X	—
1161	SID/Label TLV	X	X	—
1170	Prefix Attribute Flags	X	X	—
1171	Source Router Identifier	X	—	—
1172	L2 Bundle Member Attributes TLV	X	—	—
1173	Extended Administrative Group	X	X	—

Exchange Link State Information with BGP Neighbor

The following example shows how to exchange link-state information with a BGP neighbor:

```
Router# configure
Router(config)# router bgp 1
Router(config-bgp)# neighbor 10.0.0.2
Router(config-bgp-nbr)# remote-as 1
Router(config-bgp-nbr)# address-family link-state link-state
Router(config-bgp-nbr-af)# exit
```

IGP Link-State Database Distribution

A given BGP node may have connections to multiple, independent routing domains. IGP link-state database distribution into BGP-LS is supported for both OSPF and IS-IS protocols in order to distribute this information on to controllers or applications that desire to build paths spanning or including these multiple domains.

To distribute IS-IS link-state data using BGP-LS, use the **distribute link-state** command in router configuration mode.

```
Router# configure
Router(config)# router isis isp
Router(config-isis)# distribute link-state instance-id 32
```

To distribute OSPFv2 link-state data using BGP-LS, use the **distribute link-state** command in router configuration mode.

```
Router# configure
Router(config)# router ospf 100
Router(config-ospf)# distribute link-state instance-id 32
```

Use Case: Configuring SR-EPE and BGP-LS

In the following figure, segment routing is enabled on autonomous system AS1 with ingress node A and egress nodes B and C. In this example, we configure EPE on egress node C.

Figure 1: Topology

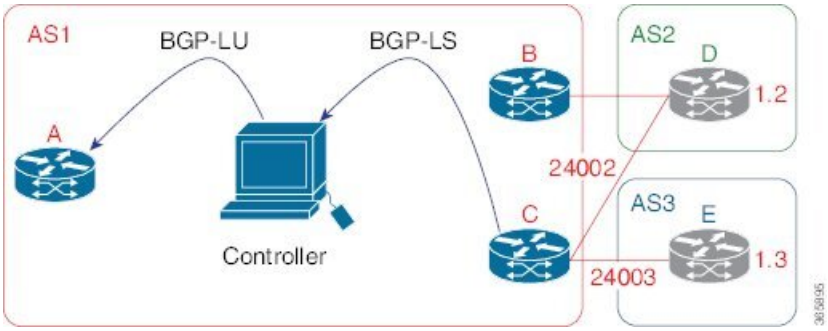

Step 1 Configure node C with EPE for eBGP peers D and E.

Example:

```
RP/0/RSP0/CPU0:router_C(config)# router bgp 1
RP/0/RSP0/CPU0:router_C(config-bgp)# neighbor 192.168.1.3
RP/0/RSP0/CPU0:router_C(config-bgp-nbr)# remote-as 3
RP/0/RSP0/CPU0:router_C(config-bgp-nbr)# description to E
RP/0/RSP0/CPU0:router_C(config-bgp-nbr)# egress-engineering
RP/0/RSP0/CPU0:router_C(config-bgp-nbr)# address-family ipv4 unicast
RP/0/RSP0/CPU0:router_C(config-bgp-nbr-af)# route-policy bgp_in in
RP/0/RSP0/CPU0:router_C(config-bgp-nbr-af)# route-policy bgp_out out
RP/0/RSP0/CPU0:router_C(config-bgp-nbr-af)# exit
RP/0/RSP0/CPU0:router_C(config-bgp-nbr)# exit
RP/0/RSP0/CPU0:router_C(config-bgp)# neighbor 192.168.1.2
RP/0/RSP0/CPU0:router_C(config-bgp-nbr)# remote-as 2
RP/0/RSP0/CPU0:router_C(config-bgp-nbr)# description to D
RP/0/RSP0/CPU0:router_C(config-bgp-nbr)# egress-engineering
RP/0/RSP0/CPU0:router_C(config-bgp-nbr)# address-family ipv4 unicast
RP/0/RSP0/CPU0:router_C(config-bgp-nbr-af)# route-policy bgp_in in
RP/0/RSP0/CPU0:router_C(config-bgp-nbr-af)# route-policy bgp_out out
RP/0/RSP0/CPU0:router_C(config-bgp-nbr-af)# exit
RP/0/RSP0/CPU0:router_C(config-bgp-nbr)# exit
```

Step 2 Configure node C to advertise peer node SIDs to the controller using BGP-LS.

Example:

```
RP/0/RSP0/CPU0:router_C(config-bgp)# neighbor 172.29.50.71
RP/0/RSP0/CPU0:router_C(config-bgp-nbr)# remote-as 1
RP/0/RSP0/CPU0:router_C(config-bgp-nbr)# description to EPE_controller
RP/0/RSP0/CPU0:router_C(config-bgp-nbr)# address-family link-state link-state
RP/0/RSP0/CPU0:router_C(config-bgp-nbr)# exit
RP/0/RSP0/CPU0:router_C(config-bgp)# exit
```

Step 3 Configure MPLS static on the egress interfaces connecting to the eBGP peer.

Example:

```
RP/0/RSP0/CPU0:router_C(config)# mpls static
RP/0/RSP0/CPU0:router_C(config-mpls-static)# interface TenGigE 0/3/0/0
RP/0/RSP0/CPU0:router_C(config-mpls-static)# interface TenGigE 0/1/0/0
RP/0/RSP0/CPU0:router_C(config-mpls-static)# exit
```

Step 4 Commit the configuration.

Example:

```
RP/0/RSP0/CPU0:router_C(config)# commit
```

Step 5 Verify the configuration.

Example:

```
RP/0/RSP0/CPU0:router_C# show bgp egress-engineering

 Egress Engineering Peer Set: 192.168.1.2/32 (10b87210)
     Nexthop: 192.168.1.2
     Version: 2, rn_version: 2
       Flags: 0x00000002
   Local ASN: 1
  Remote ASN: 2
   Local RID: 10.1.1.3
  Remote RID: 10.1.1.4
   First Hop: 192.168.1.2
        NHID: 3
       Label: 24002, Refcount: 3
     rpc_set: 10b9d408

 Egress Engineering Peer Set: 192.168.1.3/32 (10be61d4)
     Nexthop: 192.168.1.3
     Version: 3, rn_version: 3
       Flags: 0x00000002
   Local ASN: 1
  Remote ASN: 3
   Local RID: 10.1.1.3
  Remote RID: 10.1.1.5
   First Hop: 192.168.1.3
        NHID: 4
       Label: 24003, Refcount: 3
     rpc_set: 10be6250
```

The output shows that node C has allocated peer SIDs for each eBGP peer.

Example:

```
RP/0/RSP0/CPU0:router_C# show mpls forwarding labels 24002 24003
Local  Outgoing    Prefix             Outgoing     Next Hop        Bytes
Label  Label       or ID              Interface                    Switched
------ ----------- ------------------ ------------ --------------- ------------
24002  Pop         No ID              Te0/3/0/0    192.168.1.2     0
24003  Pop         No ID              Te0/1/0/0    192.168.1.3     0
```

The output shows that node C installed peer node SIDs in the Forwarding Information Base (FIB).

Configure BGP Proxy Prefix SID

To support segment routing, Border Gateway Protocol (BGP) requires the ability to advertise a segment identifier (SID) for a BGP prefix. A BGP-Prefix-SID is the segment identifier of the BGP prefix segment in a segment routing network. BGP prefix SID attribute is a BGP extension to signal BGP prefix-SIDs. However, there may be routers which do not support BGP extension for segment routing. Hence, those routers also do not support BGP prefix SID attribute and an alternate approach is required.

BGP proxy prefix SID feature allows you to attach BGP prefix SID attributes for remote prefixes learnt from BGP labeled unicast (LU) neighbours which are not SR-capable and propagate them as SR prefixes. This allows an LSP towards non SR endpoints to use segment routing global block in a SR domain. Since BGP proxy prefix SID uses global label values it minimizes the use of limited resources such as ECMP-FEC and provides more scalability for the networks.

BGP proxy prefix SID feature is implemented using the segment routing mapping server (SRMS). SRMS allows the user to configure SID mapping entries to specify the prefix-SIDs for the prefixes. The mapping server advertises the local SID-mapping policy to the mapping clients. BGP acts as a client of the SRMS and uses the mapping policy to calculate the prefix-SIDs.

Configuration Example:

This example shows how to configure the BGP proxy prefix SID feature for the segment routing mapping server.

```
RP/0/RSP0/CPU0:router(config)# segment-routing
RP/0/RSP0/CPU0:router(config-sr)# mapping-server
RP/0/RSP0/CPU0:router(config-sr-ms)# prefix-sid-map
RP/0/RSP0/CPU0:router(config-sr-ms-map)# address-family ipv4
RP/0/RSP0/CPU0:router(config-sr-ms-map-af)# 10.1.1.1/32 10 range 200
RP/0/RSP0/CPU0:router(config-sr-ms-map-af)# 192.168.64.1/32 400 range 300
```

This example shows how to configure the BGP proxy prefix SID feature for the segment-routing mapping client.

```
RP/0/RSP0/CPU0:router(config)# router bgp 1
RP/0/RSP0/CPU0:router(config-bgp)# address-family ip4 unicast
RP/0/RSP0/CPU0:router(config-bgp-af)# segment-routing prefix-sid-map
```

Verification

These examples show how to verify the BGP proxy prefix SID feature.

```
RP/0/RSP0/CPU0:router# show segment-routing mapping-server prefix-sid-map ipv4 detail
Prefix
10.1.1.1/32
    SID Index:      10
    Range:          200
    Last Prefix:    10.1.1.200/32
    Last SID Index: 209
    Flags:
Number of mapping entries: 1


RP/0/RSP0/CPU0:router# show bgp ipv4 labeled-unicast 192.168.64.1/32

BGP routing table entry for 192.168.64.1/32
```

```
Versions:
  Process           bRIB/RIB  SendTblVer
  Speaker                117         117
  Local Label: 16400
Last Modified: Oct 25 01:02:28.562 for 00:11:45Paths: (2 available, best #1)
 Advertised to peers (in unique update groups):
   201.1.1.1
 Path #1: Received by speaker 0  Advertised to peers (in unique update groups):
    201.1.1.1
  Local
   20.0.101.1 from 20.0.101.1 (20.0.101.1)      Received Label 61
   Origin IGP, localpref 100, valid, internal, best, group-best, multipath, labeled-unicast

   Received Path ID 0, Local Path ID 0, version 117
  Prefix SID Attribute Size: 7
  Label Index: 1
```

```
 RP/0/RSP0/CPU0:router# show route ipv4 unicast 192.68.64.1/32 detail

Routing entry for 192.168.64.1/32
  Known via "bgp 65000", distance 200, metric 0, [ei]-bgp, labeled SR, type internal
  Installed Oct 25 01:02:28.583 for 00:20:09
  Routing Descriptor Blocks
    20.0.101.1, from 20.0.101.1, BGP multi path
      Route metric is 0
      Label: 0x3d (61)
      Tunnel ID: None
      Binding Label: None
      Extended communities count: 0
      NHID:0x0(Ref:0)
   Route version is 0x6 (6)
  Local Label: 0x3e81 (16400)
  IP Precedence: Not Set
  QoS Group ID: Not Set
  Flow-tag: Not Set
  Fwd-class: Not Set
  Route Priority: RIB_PRIORITY_RECURSIVE (12) SVD Type RIB_SVD_TYPE_LOCAL
  Download Priority 4, Download Version 242
  No advertising protos.


RP/0/RSP0/CPU0:router# show cef ipv4 192.168.64.1/32 detail
192.168.64.1/32, version 476, labeled SR, drop adjacency, internal 0x5000001 0x80 (ptr
0x71c42b40) [1], 0x0 (0x71c11590), 0x808 (0x722b91e0)
 Updated Oct 31 23:23:48.733
 Prefix Len 32, traffic index 0, precedence n/a, priority 4
 Extensions: context-label:16400
  gateway array (0x71ae7e78) reference count 3, flags 0x7a, source rib (7), 0 backups
                [2 type 5 flags 0x88401 (0x722eb450) ext 0x0 (0x0)]
  LW-LDI[type=5, refc=3, ptr=0x71c11590, sh-ldi=0x722eb450]
  gateway array update type-time 3 Oct 31 23:49:11.720
 LDI Update time Oct 31 23:23:48.733
 LW-LDI-TS Oct 31 23:23:48.733
   via 20.0.101.1/32, 0 dependencies, recursive, bgp-ext [flags 0x6020]
    path-idx 0 NHID 0x0 [0x7129a294 0x0]
    recursion-via-/32
    unresolved
     local label 16400
     labels imposed {ExpNullv6}


RP/0/RSP0/CPU0:router# show bgp labels
BGP router identifier 2.1.1.1, local AS number 65000
BGP generic scan interval 60 secs
```

```
Non-stop routing is enabled
BGP table state: Active
Table ID: 0xe0000000   RD version: 245
BGP main routing table version 245
BGP NSR Initial initsync version 16 (Reached)
BGP NSR/ISSU Sync-Group versions 245/0
BGP scan interval 60 secs

Status codes: s suppressed, d damped, h history, * valid, > best
              i - internal, r RIB-failure, S stale, N Nexthop-discard
Origin codes: i - IGP, e - EGP, ? - incomplete
   Network            Next Hop        Rcvd Label      Local Label
*>i10.1.1.1/32        10.1.1.1        3               16010
*> 2.1.1.1/32         0.0.0.0         nolabel         3
*> 192.68.64.1/32     20.0.101.1      2               16400
*> 192.68.64.2/32     20.0.101.1      2               16401
```

BGP-LU Inter-AS Option-C Interworking with LDP and IGP SR-MPLS using Proxy BGP-SR

Table 2: Feature History Table

Feature Name	Release	Description
BGP-LU Inter-AS Option-C Interworking with LDP and IGP SR-MPLS using Proxy BGP-SR	Release 7.3.2	This feature extends the current Proxy BGP-SR functionality by allowing the BGP-LU ASBR router with Proxy BGP-SR configured to also interconnect attached LDP domains. The Proxy BGP-SR feature allows interconnection of IGP SR-MPLS domains and legacy domains via BGP-LU Inter-AS option-C. It provides a prefix-to-SID mapping for BGP-LU prefixes that are learned without a Prefix-SID.

The Proxy BGP-SR feature allows interconnection of IGP SR-MPLS domains and legacy domains via BGP-LU Inter-AS option-C. It provides a prefix-to-SID mapping for BGP-LU prefixes that are learned without a Prefix-SID. This new feature extends the current functionality by allowing the BGP-LU ASBR router (configured with Proxy BGP-SR) to also interconnect attached LDP domains.

With this enhancement, when performing redistribution from BGP into IGP, LDP would use the same local label assigned by BGP for a prefix learned by BGP-LU. The local label value is based on the SR mapping server configuration (Proxy-BGP SR feature). This behavior allows incoming LDP traffic destined to a redistributed prefix to be switched over to the BGP-LU Inter-AS LSP.

Use Case

In the following figure, Router A does the following:

- Is an ASBR for BGP AS 100 running BGP-LU with BGP AS 200

- Interconnects two IS-IS processes: one running LDP and another running Segment Routing
- Redistributes prefixes learned by BGP-LU from AS 200 into both IS-IS instances
- Runs SR Mapping Server (SRMS) in order to assign mappings to prefixes learned by BGP LU from AS 200 without a prefix SID (proxy BGP-SR) and prefixes learned from the LDP domain

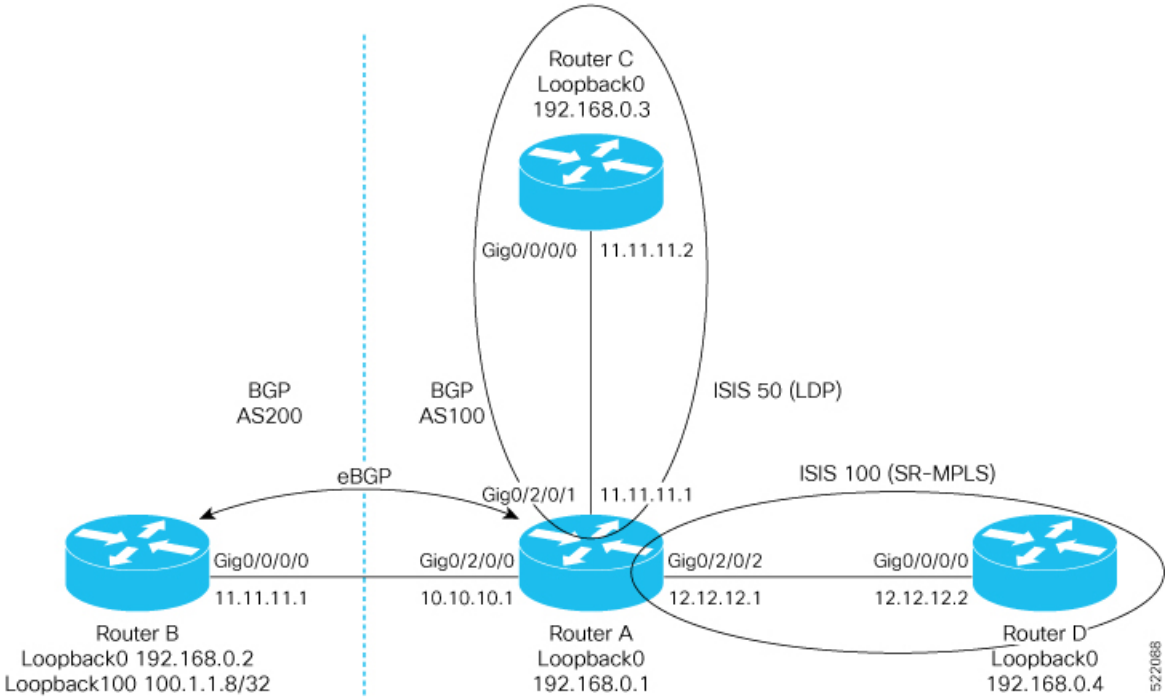

Configuration on Router A - ASBR for AS100

```
prefix-set pfxset-bgplu
  100.1.1.8/32  // The Prefix under test
end-set
!
prefix-set LOOPBACKS
  192.168.0.1,
  192.168.0.2,
  192.168.0.3,
  192.168.0.4,
  192.168.0.8
end-set
!
route-policy Pass
  pass
end-policy
!
route-policy rpl-bgplu
  if destination in pfxset-bgplu then
    pass
  else
    drop
  endif
end-policy
!
route-policy MATCH_LOOPBACKS
```

```
  if destination in LOOPBACKS then
    pass
  else
    drop
  endif
end-policy
!
router static
 address-family ipv4 unicast
  10.10.10.2/32 GigabitEthernet0/2/0/0
 !
!
router isis 50
 is-type level-2-only
 net 49.0001.0000.0000.0001.00
 address-family ipv4 unicast
  metric-style wide
  redistribute bgp 100 route-policy rpl-bgplu  // Redistribute prefixes learned by BGP-LU
into IS-IS LDP domain
 !
 interface Loopback0
  passive
  address-family ipv4 unicast
  !
 !
 interface GigabitEthernet0/2/0/1
  address-family ipv4 unicast
  !
 !
!
router isis 100
 is-type level-2-only
 net 49.0001.0000.0000.0011.00
 distribute link-state
 address-family ipv4 unicast
  metric-style wide
  mpls traffic-eng level-2-only
  mpls traffic-eng router-id Loopback0
  redistribute bgp 100 route-policy rpl-bgplu  // Redistribute prefixes learned by BGP-LU
into IS-IS SR domain
  segment-routing mpls
  segment-routing prefix-sid-map advertise-local
 !
 interface Loopback0
  passive
  address-family ipv4 unicast
   prefix-sid index 1
  !
 !
 interface GigabitEthernet0/2/0/2
  address-family ipv4 unicast
  !
 !
!
router bgp 100
 bgp router-id 192.168.0.1
 address-family ipv4 unicast
  segment-routing prefix-sid-map  // SR Proxy SID Configuration
  network 192.168.0.1/32
  redistribute isis 50 route-policy MATCH_LOOPBACKS
  redistribute isis 100 route-policy MATCH_LOOPBACKS
  allocate-label all
 !
 neighbor 10.10.10.2
```

```
  remote-as 200
  address-family ipv4 labeled-unicast
   route-policy Pass in
   route-policy Pass out
  !
 !
!
mpls ldp
 router-id 192.168.0.1
 interface GigabitEthernet0/2/0/1
 !
!
segment-routing
 global-block 16000 23999
 mapping-server
  prefix-sid-map  // SRMS configuration
   address-family ipv4
    100.1.1.8/32 108 range 1  // SRMS mapping - LU prefix 100.1.1.8/32 assigned prefix index
 108
    192.168.0.3/32 3 range 1  // SRMS mapping - LDP prefix Router C assigned prefix index
3
   !
  !
 !
!
```

Configuration on Router B - ASBR for AS200

```
route-policy Pass
  pass
end-policy
!
router static
 address-family ipv4 unicast
  10.10.10.1/32 GigabitEthernet0/0/0/0
 !
!
router bgp 200
 bgp router-id 192.168.0.2
 address-family ipv4 unicast
  network 100.1.1.8/32  // Import/Inject route into BGP
  network 192.168.0.2/32
  allocate-label all
 !
 neighbor 10.10.10.1
  remote-as 100
  address-family ipv4 labeled-unicast
   route-policy Pass in
   route-policy Pass out
  !
 !
!
```

Configuration on Router C in the LDP Domain

```
router isis 50
 is-type level-2-only
 net 49.0001.0000.0000.0003.00
 address-family ipv4 unicast
  metric-style wide
 !
 interface Loopback0
  passive
```

```
  address-family ipv4 unicast
  !
 !
 interface GigabitEthernet0/0/0/0
  address-family ipv4 unicast
  !
 !
!
mpls ldp
 router-id 192.168.0.3
 interface GigabitEthernet0/0/0/0
 !
!
```

Configuration on Router D in the SR IS-IS Domain

```
router isis 100
 is-type level-2-only
 net 49.0001.0000.0000.0004.00
 address-family ipv4 unicast
  metric-style wide
  mpls traffic-eng level-2-only
  mpls traffic-eng router-id Loopback0
  segment-routing mpls
 !
 interface Loopback0
  passive
  address-family ipv4 unicast
   prefix-sid index 4
  !
 !
 interface GigabitEthernet0/0/0/0
  address-family ipv4 unicast
  !
 !
!
segment-routing
!
```

BGP Best Path Computation using SR Policy Paths

Table 3: Feature History Table

Feature Name	Release Information	Feature Description
BGP Best Path Computation using SR Policy Paths		BGP best-path selection is modified for a prefix when at least one of its paths resolves over the next hop using SR policies (SR policy in "up" state). Under this condition, paths not steered over an SR policy (those using native next-hop resolution) are considered ineligible during best-path selection. You can thus control the best path selection in order to steer traffic, preferably or exclusively, over SR policies with the desired SLA. This feature introduces the **bgp bestpath sr-policy {force | prefer}** command.

BGP selects the best path from the available pool of paths such as iBGP, eBGP, color, or noncolor paths with native next hop and SR policy next hop. BGP uses either native next hop or an SR policy next hop for best path computation. However, BGP might not consider SR policy next hop for best path computation due to other factors in best path selection. By default, BGP considers a native next hop for the best path computation during the failure.

For more information, see Best path calculation algorithm.

When multiple advertisements of the same BGP prefix are received where some have extended community color, SRTE headend with BGP multi-path enabled installs multiple routes with or without extended community color. It may be required to exclude the path resolving over native next hop SR policy paths from BGP best path selection when a prefix has multiple paths in the presence of one BGP path with the extended community color that is resolved over the SR policy.

You may want to use the egress PE to exit a domain using local preference or other attributes before the next hop metric selection. In such scenarios, when SR policy of the primary path fails, the best path is resolved over a regular IGP next hop that is the default mode of operation. Traffic doesn't select the backup path with SR policy, instead traffic moves to native LSP on the primary path.

The BGP Best Path Computation using SR Policy Paths feature allows the BGP to use the path with SR policy as the best-path, backup, and multipath.

When this feature is enabled, some paths are marked as an ineligible path for BGP best path selection. Existing BGP best path selection order is applied to the eligible paths.

Use either of the following modes for the BGP to select the SR policy path as the best path for the backup path:

- Force mode: When force mode is enabled, only SR policy paths are considered for best path calculation. Use the **bgp bestpath sr-policy force** command to enable this mode.

  In a network, when at least one path has an active SR policy, the following paths are marked as ineligible for best path selection:

  - iBGP paths with noncolor or color paths with SR policy that isn't active.
  - eBGP with color and SR policy isn't active.
  - eBGP noncolor paths

Note Local and redistributed BGP paths are always eligible for best path selection.

- Prefer mode: When prefer mode is enabled, SR policy paths and eBGP noncolor paths are eligible for best path calculation.

  Use the **bgp bestpath sr-policy prefer** command to enable this mode.

  In a network, when at least one path has an active SR policy, the following paths are marked as ineligible for best path selection:

  - iBGP paths with noncolor or color paths with SR policy that isn't active.
  - eBGP with color and SR policy isn't active.

Note Local and redistributed BGP paths are always eligible for best path selection.

Configure BGP Best Path Computation using SR Policy Paths

To enable the feature, perform the following tasks on the ingress PE router that is the head-end of SR policy:

- Configure route policy.
- Configure SR policy.
- Configure BGP with either prefer or force mode.

Configuration Example

Configure route policies on the egress PE router:

```
Router(config)#extcommunity-set opaque color9001
Router(config-ext)#9001 co-flag 01
Router(config-ext)#end-set
Router(config)#extcommunity-set opaque color9002
Router(config-ext)#9002 co-flag 01
Router(config-ext)#end-set
Router(config)#commitC

Router(config)#route-policy for9001
Router(config-rpl)#set extcommunity color color9001
```

```
Router(config-rpl)# pass
Router(config-rpl)#end-policy

Router(config)#route-policy for9002
Router(config-rpl)#set extcommunity color color9002
Router(config-rpl)#pass
Router(config-rpl)#end-policy
Router(config)#commit


Router#configure
Router(config)#route-policy add_path
Router(config-rpl)#set path-selection backup 1 install multipath-protect advertise
multipath-protect-advertise
Router(config-rpl)#end-policy

Router(config)#route-policy pass-all
Router(config-rpl)#pass
Router(config-rpl)#end-policy
Router(config)#commit
```

Configure SR policy on the egress PE router:

```
Router#configure
Router(config)#segment-routing
Router(config-sr)#traffic-eng
Router(config-sr-te)#segment-list SL201
Router(config-sr-te-sl)#index 1 mpls label 25000
Router(config-sr-te-sl)#policy POLICY_9001
Router(config-sr-te-policy)#binding-sid mpls 47700
Router(config-sr-te-policy)#color 9001 end-point ipv6 ::
Router(config-sr-te-policy)#candidate-paths
Router(config-sr-te-policy-path)#preference 10
Router(config-sr-te-policy-path-pref)#explicit segment-list SL201
Router(config-sr-te-sl)#policy POLICY_9002
Router(config-sr-te-policy)#binding-sid mpls 47701
Router(config-sr-te-policy)#color 9002 end-point ipv6 ::
Router(config-sr-te-policy)#candidate-paths
Router(config-sr-te-policy-path)#preference 10
Router(config-sr-te-policy-path-pref)#explicit segment-list SL201
Router(config-sr-te-policy-path-pref)#commit
```

Configure BGP on the Egress PE router:

```
Router(config)#router bgp 100
Router(config-bgp)#nsr
Router(config-bgp)#bgp router-id 10.1.1.2
Router(config-bgp)#bgp best-path sr-policy force
Router(config-bgp)#address-family ipv6 unicast
Router(config-bgp-af)#maximum-paths eibgp 25
Router(config-bgp-af)#additional-paths receive
Router(config-bgp-af)#additional-paths send
Router(config-bgp-af)#additional-paths selection route-policy add_path
Router(config-bgp-af)#redistribute connected
Router(config-bgp-af)#redistribute static
Router(config-bgp-af)#allocate-label all
Router(config-bgp-af)#commit
Router(config-bgp-af)#exit
Router(config-bgp)#neighbor 31::2
Router(config-bgp-nbr)#remote-as 2
Router(config-bgp-nbr)#address-family ipv6 unicast
Router(config-bgp-nbr-af)#route-policy for9001 in
Router(config-bgp-nbr-af)#route-policy pass-all out
```

```
Router(config-bgp-nbr-af)#commit
Router(config-bgp-nbr-af)#exit
Router(config-bgp)#neighbor 32::2
Router(config-bgp-nbr)#remote-as 2
Router(config-bgp-nbr)#address-family ipv6 unicast
Router(config-bgp-nbr-af)#route-policy for9002 in
Router(config-bgp-nbr-af)#route-policy pass-all out
Router(config-bgp-nbr-af)#commit
```

Verification

The following show output shows that when the **force** option is enabled, the configured SR policy path is selected as the best path instead of the default best path.

```
Router#show bgp ipv6 unicast 2001:DB8::1 brief
Status codes: s suppressed, d damped, h history, * valid, > best
              i - internal, r RIB-failure, S stale, N Nexthop-discard
Origin codes: i - IGP, e - EGP, ? - incomplete
   Network            Next Hop            Metric LocPrf Weight Path
* 2001:DB8::1         10:1:1::55                     100      0 2 i
* i                   10:1:1::55                     100      0 2 i

*                     30::2                                   0 2 I
*>                    31::2 C:9001                            0 2 I
*                     32::2 C:9002                            0 2 I
Router#
```

Use the following command to compare the best paths:

```
Router#show bgp ipv6 unicast 2001:DB8::1 bestpath-compare
BGP routing table entry for 2001:DB8::1
Versions:
  Process           bRIB/RIB  SendTblVer
  Speaker               7641        7641
    Flags: 0x240232b2+0x20050000; multipath; backup available;
Last Modified: Dec  7 03:43:57.200 for 00:34:48
Paths: (24 available, best #4)
  Advertised IPv6 Unicast paths to update-groups (with more than one peer):
    0.3 0.4
  Advertised IPv6 Unicast paths to peers (in unique update groups):
    10.1.1.55
  Path #1: Received by speaker 0
  Flags: 0x2000000000020005, import: 0x20
  Flags2: 0x00
  Not advertised to any peer
  2
    10:1:1::55 (metric 30) from 10.1.1.55 (10.1.1.55), if-handle 0x00000000
      Origin IGP, localpref 100, valid, internal
      Received Path ID 1, Local Path ID 0, version 0
      Extended community: Color[CO-Flag]:8001[01]
      Non SR-policy path is ignored due to config knob
  Path #2: Received by speaker 0
  Flags: 0x2000000000020005, import: 0x20
  Flags2: 0x00
  Not advertised to any peer
  2
    10:1:1::55 (metric 30) from 10.1.1.55 (10.1.1.55), if-handle 0x00000000
      Origin IGP, localpref 100, valid, internal
      Received Path ID 3, Local Path ID 0, version 0
      Extended community: Color[CO-Flag]:8002[01]
      Non SR-policy path is ignored due to config knob
  Path #3: Received by speaker 0
  Flags: 0x3000000000060001, import: 0x20
```

```
  Flags2: 0x00
  Advertised IPv6 Unicast paths to update-groups (with more than one peer):
    0.4
  Advertised IPv6 Unicast paths to peers (in unique update groups):
    10.1.1.55
  2
    30::2 from 30::2 (198.51.100.1), if-handle 0x00000000
      Origin IGP, localpref 100, weight 65534, valid, external, backup, add-path
      Received Path ID 0, Local Path ID 2, version 7641
      Origin-AS validity: (disabled)
      Non SR-policy path is ignored due to config knob
  Path #4: Received by speaker 0
  Flags: 0xb000000001070001, import: 0x20
  Flags2: 0x00
  Advertised IPv6 Unicast paths to update-groups (with more than one peer):
    0.3 0.4
  Advertised IPv6 Unicast paths to peers (in unique update groups):
    10.1.1.55
  2
    31::2 C:9001 (bsid:48900) from 31::2 (198.51.100.2), if-handle 0x00000000
      Origin IGP, localpref 100, valid, external, best, group-best, multipath
      Received Path ID 0, Local Path ID 1, version 7641
      Extended community: Color[CO-Flag]:9001[01]
      Origin-AS validity: (disabled)
      SR policy color 9001, ipv6 null endpoint, up, not-registered, bsid 48900

      best of AS 2, Overall best
  Path #5: Received by speaker 0
  Flags: 0xb000000000030001, import: 0x20
  Flags2: 0x00
  Not advertised to any peer
  2
    32::2 C:9002 (bsid:48901) from 32::2 (198.51.100.3), if-handle 0x00000000
      Origin IGP, localpref 100, valid, external, multipath
      Received Path ID 0, Local Path ID 0, version 0
      Extended community: Color[CO-Flag]:9002[01]
      Origin-AS validity: (disabled)
      SR policy color 9002, up, not-registered, bsid 48901
      Higher router ID than best path (path #4)
```

Use the **show bgp process** command to verify which mode is enabled.

In the following example, you see that the **force** mode is enabled.

```
Router#show bgp process
BGP Process Information:
BGP is operating in STANDALONE mode
Autonomous System number format: ASPLAIN
Autonomous System: 100
Router ID: 10.1.1.2 (manually configured)
Default Cluster ID: 10.1.1.2
Active Cluster IDs:  10.1.1.2
Fast external fallover enabled
Platform Loadbalance paths max: 64
Platform RLIMIT max: 8589934592 bytes
Maximum limit for BMP buffer size: 1638 MB
Default value for BMP buffer size: 1228 MB
Current limit for BMP buffer size: 1228 MB
Current utilization of BMP buffer limit: 0 B
Neighbor logging is enabled
Enforce first AS enabled
Use SR-Policy admin/metric of color-extcomm Nexthop during path comparison: disabled
SR policy path force is enabled
Default local preference: 100
```

```
Default keepalive: 60
Non-stop routing is enabled
Slow peer detection enabled
ExtComm Color Nexthop validation: RIB

Update delay: 120
Generic scan interval: 60
Configured Segment-routing Local Block: [0, 0]
In use Segment-routing Local Block: [15000, 15999]
Platform support mix of sr-policy and native nexthop: Yes

Address family: IPv4 Unicast
Dampening is not enabled
Client reflection is enabled in global config
Dynamic MED is Disabled
Dynamic MED interval : 10 minutes
Dynamic MED Timer : Not Running
Dynamic MED Periodic Timer : Not Running
Scan interval: 60
Total prefixes scanned: 33
Prefixes scanned per segment: 100000
Number of scan segments: 1
Nexthop resolution minimum prefix-length: 0 (not configured)
IPv6 Nexthop resolution minimum prefix-length: 0 (not configured)
Main Table Version: 12642
Table version synced to RIB: 12642
Table version acked by RIB: 12642
IGP notification: IGPs notified
RIB has converged: version 2
RIB table prefix-limit reached ?  [No], version 0
Permanent Network Unconfigured

Node                Process     Nbrs Estb Rst Upd-Rcvd Upd-Sent Nfn-Rcv Nfn-Snt
node0_RSP1_CPU0     Speaker       53    3   2      316      823       0      53
```

Optimal Utilization of ECMP FEC Resources

Table 4: Feature History Table

Feature Name	Release Information	Feature Description
Optimal Utilization of ECMP FEC Resources	Release 7.5.2	BGP-SR multipath ECMP FEC optimization is enhanced to support 32k BGP-LU prefixes (from the earlier 4k BGP-LU prefixes) on multipath with the same outgoing label. This results in the consumption of lesser ECMP FEC resources, thus avoiding out-of-resource (OOR) situations for your router. In earlier releases, all 4k BGP-LU prefixes consumed all the 4k ECMP FEC resources. Use the **hw-module fib mpls bgp-sr lsr-optimized** command to enable BGP-SR multipath ECMP FEC optimization.

The BGP-SR multipath ECMP FEC optimization solution minimizes the ECMP FEC resource consumption during underlay programming for an SR-MPLS network. BGP-LU prefix consumes one FEC resource for every path and one ECMP FEC resource for multipath. When you configure BGP-LU multipath, each BGP-LU prefix consumes one ECMP FEC resource for programming the prefix. This limits the BGP-LU prefix scale to only 4k. To support higher BGP-LU prefix scales of upto 32k, you need to conserve the ECMP FEC resources. With BGP-SR multipath ECMP FEC optimization feature, you can conserve the ECMP FEC resource usage when BGP-LU multipath is configured.

Enable the **hw-module fib mpls bgp-sr lsr-optimized** command, and ensure that all BGP-LU prefix paths advertise the same `out_label`. You can achieve this with BGP-SR or proxy BGP-SR by using same **prefix-sid-map** on the next hop routers.

After you enable ECMP FEC optimization, all BGP-LU prefix is assigned the same ECMP FEC key by conserving the ECMP FEC resources and supports scale of upto 32k BGP-LU prefixes.

Note If the paths for BGP-LU prefixes don't have the same `out_label`, then each prefix whose `out_label` isn't the same, starts to consume ECMP FEC resources and may result in out-of-resource (OOR) when it exceeds 4k, and you may observe traffic drops. Also, the successive prefixes starts to consume FEC resources, which affect multipath support.

Usage Guidelines and Limitations

- BGP-SR multipath ECMP FEC optimization feature isn't supported on Cisco NCS 5700 series fixed port routers or Cisco NCS 5500 series routers that have the Cisco NC57 line cards installed and operating in the native or compatible modes.
- All the prefixes advertised must be /32 (IPv4 only) and to enable optimization, all prefixes must have the same outgoing label.
- eBGP is always interface peering and iBGP is always loopback peering.
- Supports 32k LU prefix scale (IPv4 only) for loopback peering and 24k LU prefix scale for interface peering.
  - For eBGP interface peering, the maximum BGP next hops possible is only 2.
  - For iBGP loopback peering, the maximum BGP next hops possible is only 4.
- You can't configure the **hw-module fib mpls bgp-sr lsr-optimized** command, if **hw-module fib mpls label lsr-optimized** command is already configured.
- No ECMP FEC optimization is supported for L3VPN services over BGP-LU loopback peering.

Enable BGP-SR Multipath ECMP FEC Optimization

To enable BGP-SR multipath ECMP FEC optimization, you must configure the **hw-module fib mpls label lsr-optimized** command in global configuration mode. After enabling this feature, reload the chassis.

```
Router(config)#hw-module fib mpls bgp-sr lsr-optimized
Tue Nov 16 22:27:42.360 UTC
In order to activate this MPLS profile, you must manually reload the chassis/all line cards
Router(config)#commit

Router# reload location 0/0/CPU0

Proceed with reload? [confirm]
Reloading node 0/0/CPU0
```

Verification

The following example shows NPU ECMP FEC resource before enabling BGP-SR multipath ECMP FEC optimization, shows the OOR state and the ECMP FEC resource consumption.

```
RP/0/RP0/CPU0:PE1#show controllers npu resources ecmpfec location all
Tue Nov 16 21:43:01.219 UTC
HW Resource Information For Location: 0/7/CPU0
HW Resource Information
    Name                            : ecmp_fec
    Asic Type                       : Jericho
NPU-0
OOR Summary
        Estimated Max Entries       : 4096
        Red Threshold               : 95 %
        Yellow Threshold            : 80 %
        OOR State                   : Red
        OOR State Change Time       : 2021.Nov.16 21:39:21 UTC
        Bank Info                   : ECMP
```

```
OFA Table Information
(May not match HW usage)
        ipnhgroup                   : 3916
        ip6nhgroup                  : 178

Current Hardware Usage
    Name: ecmp_fec
        Estimated Max Entries       : 4096
        Total In-Use             : 4094     (99 %)
        OOR State                   : Red
        OOR State Change Time       : 2021.Nov.16 21:39:21 UTC
        Bank Info                   : ECMP
       Name: hier_0
           Total In-Use                : 4094
           OOR State                   : Red
           OOR State Change Time       : 2021.Nov.16 21:39:21 UTC
           Bank Info                   : ECMP
```

The following example shows NPU usage after enabling BGP-SR multipath ECMP FEC optimization, shows improvement in the OOR state and the ECMP FEC resource consumption.

```
RP/0/RP0/CPU0:PE1#show controllers npu resources ecmpfec location all
Wed Nov 17 19:49:08.978 UTC
HW Resource Information
    Name                            : ecmp_fec
    Asic Type                       : Jericho
NPU-0
OOR Summary
        Estimated Max Entries       : 4096
        Red Threshold               : 95 %
        Yellow Threshold            : 80 %
        OOR State                : Green
        Bank Info                   : ECMP
OFA Table Information
(May not match HW usage)
        ipnhgroup                   : 185
        ip6nhgroup                  : 178
Current Hardware Usage
    Name: ecmp_fec
        Estimated Max Entries       : 4096
        Total In-Use                : 363      (8 %)
        OOR State                   : Green
        Bank Info                   : ECMP
       Name: hier_0
           Total In-Use                : 363
           OOR State                   : Green
           Bank Info                   : ECMP
```