EVPN Virtual Private Wire Service (VPWS)

Table 1: Feature History Table

Feature Name	Release Information	Feature Description
Ethernet VPN Virtual Private Wire Service	Release 7.8.1	The Ethernet VPN Virtual Private Wire Service (EVPN-VPWS) is a BGP control plane solution for point-to-point services. It implements the signaling and encapsulation techniques for establishing an EVPN instance between a pair of PEs. It provides the service of forwarding L2 Ethernet traffic between network devices without inspecting the MAC header in the Ethernet frame. The use of EVPN for VPWS eliminates the need for signaling single-segment and multi-segment pseudowire (PW) for point-to-point Ethernet services.

The EVPN-VPWS technology works on IP and MPLS core; IP core to support BGP and MPLS core for switching packets between the endpoints.

- EVPN-VPWS Single Homed, on page 1
- EVPN Seamless Integration with Legacy VPWS, on page 5

EVPN-VPWS Single Homed

The EVPN-VPWS single homed solution requires per EVI Ethernet Auto Discovery route. EVPN defines a new BGP Network Layer Reachability Information (NLRI) used to carry all EVPN routes. BGP Capabilities Advertisement used to ensure that two speakers support EVPN NLRI (AFI 25, SAFI 70) as per RFC 4760.

The architecture for EVPN-VPWS is that the PEs run Multi-Protocol BGP in a control-plane.

The following image describes the EVPN-VPWS configuration:

Figure 1: EVPN-VPWS Single Homed

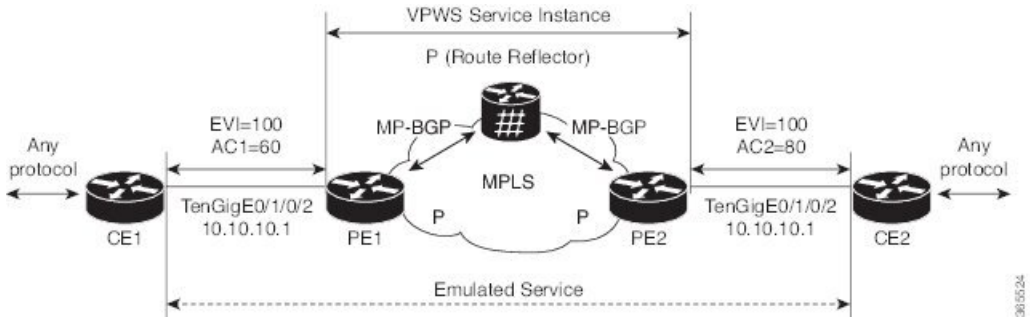

- The VPWS service on PE1 requires the following three elements to be specified at the configuration time:
  - The VPN ID (EVI).
  - The local AC identifier (AC1) that identifies the local end of the emulated service.
  - The remote AC identifier (AC2) that identifies the remote end of the emulated service.

  PE1 allocates an MPLS label per local AC for reachability.
- The VPWS service on PE2 is set in the same manner as PE1. The three same elements are required and the service configuration must be symmetric.

  PE2 allocates an MPLS label per local AC for reachability.
- PE1 advertises a single EVPN per EVI Ethernet AD route for each local endpoint (AC) to remote PEs with the associated MPLS label.

  PE2 performs the same task.
- On reception of EVPN per EVI EAD route from PE2, PE1 adds the entry to its local EVPN data base. PE1 knows the path list to reach AC2, for example, next hop is PE2 IP address and MPLS label for AC2.

  PE2 performs the same task.

Restrictions for EVPN-VPWS

- EVPN-VPWS does not support Pseudowire Headend (PWHE) configuration.
- EVPN-VPWS is supported only on single-homing and is not supported on dual homing. This is applicable for both the local and remote sides of the network.

  EVPN validates if the route is for a single home next hop, otherwise it issues an error message. An Ethernet Segment Identifier (ESI) is an attribute that is used to enable EVPN multi-homing. EVPN relies on the ESI value being zero to determine if this is a single home or not. If the AC is a Bundle-Ether interface running LACP, then you need to manually configure the ESI value to zero to overwrite the auto-sense ESI, as EVPN-VPWS multi-homing is not supported.

  To disable EVPN dual homing, configure bundle-Ether AC with ESI value (**identifier type**) set to zero.

```
Router(config)# evpn
Router(config-evpn)# interface Bundle-Ether12
```

```
Router(config-evpn-ac)# ethernet-segment
Router(config-evpn-ac-es)# identifier type 0 00.00.00.00.00.00.00.00.00
```

As an alternative, you can disable EVPN dual homing globally.

```
Router(config)# evpn
Router(config-evpn)# ethernet-segment type 1 auto-generation-disable
```

Configure EVPN-VPWS Single Homed

This section describes how to configure single-homed EVPN-VPWS feature.

```
/* Configure PE1 */
Router# configure
Router(config)# router bgp 100
Router(config-bgp)# address-family l2vpn evpn
Router(config-bgp-af)# exit
Router(config-bgp)# neighbor 10.10.10.1
Router(config-bgp-nbr))# address-family l2vpn evpn
Router(config-bgp-nbr-af)# commit
Router(config-bgp-nbr-af)# root
Router(config)# l2vpn
Router(config-l2vpn)# xconnect group evpn-vpws
Router(config-l2vpn-xc)# p2p evpn1
Router(config-l2vpn-xc-p2p)# interface TenGigE0/1/0/2
Router(config-l2vpn-xc-p2p)# neighbor evpn evi 100 target 12 source 10
Router(config-l2vpn-xc-p2p-pw)# exit
Router(config-l2vpn-xc-p2p)# commit
```

```
/* Configure PE2 */
Router# configure
Router(config)# router bgp 100
Router(config-bgp)# address-family l2vpn evpn
Router(config-bgp-af)# exit
Router(config-bgp)# neighbor 10.10.10.1
Router(config-bgp-nbr))# address-family l2vpn evpn
Router(config-bgp-nbr-af)# commit
Router(config-bgp-nbr-af)# root
Router(config)# l2vpn
Router(config-l2vpn)# xconnect group evpn-vpws
Router(config-l2vpn-xc)# p2p evpn1
Router(config-l2vpn-xc-p2p)# interface TenGigE0/1/0/2
Router(config-l2vpn-xc-p2p)# neighbor evpn evi 100 target 10 source 12
Router(config-l2vpn-xc-p2p-pw)# exit
Router(config-l2vpn-xc-p2p)# commit
```

If the source and target AC IDs are the same, use the following command to configure the neighbor EVPN:

neighbor evpn evi 100 service 10

Running Configuration

```
/* On PE1 */
configure
router bgp 100
 address-family l2vpn evpn
 neighbor 10.10.10.1
  address-family l2vpn evpn
```

```
!

configure
l2vpn
 xconnect group evpn-vpws
  p2p evpn1
   interface TenGigE0/1/0/2
   neighbor evpn evi 100 target 12 source 10
!


/* On PE2 */
configure
router bgp 100
 address-family l2vpn evpn
 neighbor 10.10.10.1
  address-family l2vpn evpn
!

configure
l2vpn
 xconnect group evpn-vpws
  p2p evpn1
   interface TenGigE0/1/0/2
   neighbor evpn evi 100 target 10 source 12
!
```

EVPN Seamless Integration with Legacy VPWS

Table 2: Feature History Table

Feature Name	Release Information	Feature Description
EVPN Seamless Integration with Legacy VPWS	Release 7.8.1	When expanding an existing L2VPN network, users may want to deploy EVPN-VPWS to provide additional Layer 2 point-to-point Ethernet services, and at the same time some of their customer traffic may still need to be terminated on the existing L2VPN PEs on their network. Users can migrate the PE nodes from L2VPN VPWS to EVPN-VPWS, without disruption in traffic. The seamless migration offers users the option to use either VPWS or EVPN-VPWS services on PE nodes. This allows the coexistence of legacy VPWS and EVPN-VPWS dual-stack in the core for a given L2 Attachment Circuit (AC) over the same MPLS network. This feature introduces the **vpws-seamless-integration** command.

Although VPWS is a widely deployed Layer 2 VPN technology, some users prefer to migrate to EVPN service in their existing VPWS networks to leverage the benefits of EVPN services.

With EVPN-VPWS Seamless Integration feature, users can migrate the PE nodes from legacy VPWS service to EVPN-VPWS gradually and incrementally without any service disruption.

Users can migrate an Attachment Circuit (AC) connected to a legacy VPWS pseudowire (PW), which is using targeted-LDP signaling or BGP-AD signaling, to an EVPN-VPWS service.

In an EVPN-VPWS network, VPN instances are grouped by EVPN Instance VPN ID (EVI) and identified by an ethernet tag or attachment circuit ID (AC-ID). EVI is also associated with route-targets and route-distinguisher.

During migration, an EVPN-VPWS PE router performs either VPWS or EVPN-VPWS L2 cross-connect for a given AC. When both EVPN-VPWS and BGP-AD PWs are configured for the same AC, the EVPN-VPWS PE during migration advertises the BGP VPWS Auto-Discovery (AD) route as well as the BGP EVPN Auto-Discovery (EVI/EAD) route and gives preference to EVPN-VPWS Pseudowire (PW) over the BGP-AD VPWS PW.

Let's understand how a legacy VPWS network can be migrated seamlessly to EVPN-VPWS with the following scenario:

Consider that a user plans to migrate VPWS node to an EVPN node one at a time. The user expects the migration to span over multiple years.

Figure 2: VPWS Nodes

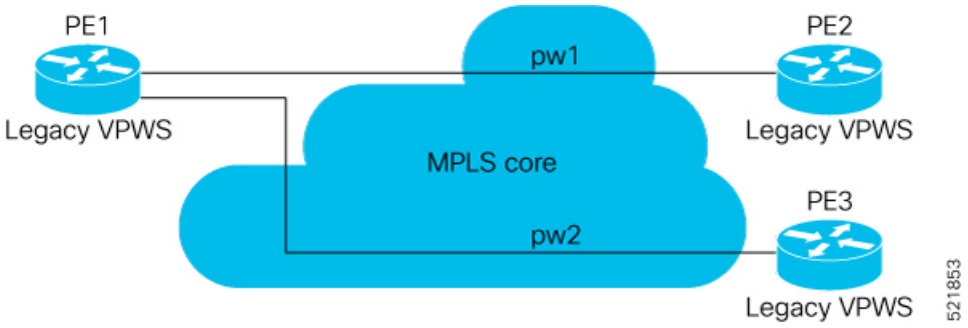

In this topology, PE1, PE2, PE3 are provider edge devices in the MPLS network and the legacy VPWS cross-connects are up and running between PE1, PE2, and PE3.

- PE1 and PE2 have a legacy PW established between them. (pw1)
- PE1 and PE3 have a legacy PW established between them. (pw2)

The user wants to replace PE1 with a new hardware. After replacing the equipment, the user enables EVPN-VPWS on PE1.

Figure 3: PE1 Enabled with EVPN-VPWS

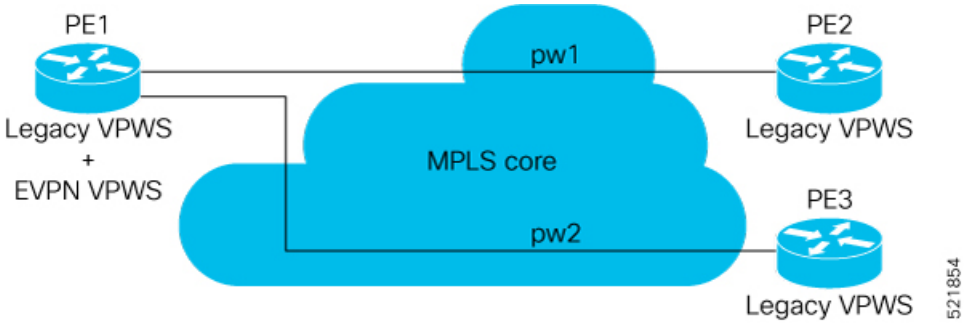

Let's understand what happens when only PE1 is migrated to EVPN-VPWS:

- When EVPN-VPWS is enabled, PE1 starts advertising EVPN EVI or Ethernet-AD route to other PE nodes.
- PE1 advertises BGP VPWS Auto-Discovery route and the BGP EVPN Ethernet-AD per EVI route for a given PW.
- As PE2 and PE3 aren't yet migrated, PE1 does not receive any EVI/EAD routes from these PE nodes. Therefore, legacy VPWS runs between PE1, PE2, and PE3.
- PE1 keeps forwarding traffic using legacy VPWS.

After one year, the user decides to upgrade PE2 and wants to migrate from VPWS to EVPN-VPWS.

Figure 4: PE2 enabled with EVPN-VPWS

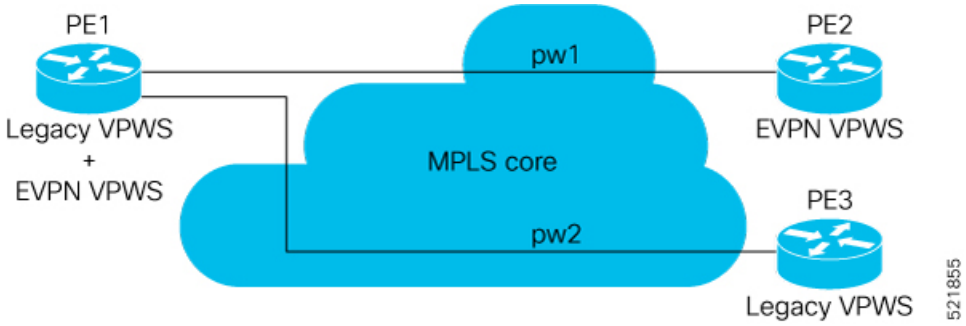

- When the upgrade is completed, PE2 starts advertising EVI/EAD route to other PE nodes.
- Both PE1 and PE2 discover each other through EVPN routes.
- As a result, EVPN-VPWS service replaces legacy VPWS service between PE1 and PE2. This is called EVPN Seamless Integration with legacy VPWS.
- EVPN-VPWS service takes high-precedence over legacy VPWS network.
- PE1 and PE2 shuts down the legacy VPWS between them to prevent ongoing duplicate packets from remote CE.

PE3 device is not yet migrated and still runs legacy VPWS:

- At this stage, PE1 keeps running legacy VPWS service with PE3.
- The legacy VPWS to EVPN-VPWS migration then continues to remaining PE nodes. The legacy VPWS and EVPN-VPWS dual-stack coexist in the core for a given L2 Attachment Circuit (AC).

After another year, the user plans to upgrade the PE3 device.

- PE3 is now enabled with EVPN-VPWS service.
- All the PE devices are replaced with EVPN-VPWS services in the network.
- The user plans to retain both legacy and an EVPN-VPWS related configuration on PE1 and PE2 nodes.
- If there are any issues in the network, the user can roll back the migration. After the rollback, the migration to VPWS at node PE2, then PE1 and PE2, will revert to the legacy VPWS between them

Configure EVPN Seamless Integration with Legacy VPWS

To enable the feature, use the **vpws-seamless-integration** command.

Configuration Example

The following example shows how to migrate each PE at a time. In this example, the following Customer Edge (CE) IDs are used:

- PE1 is connected to CE1 and CE3.
- PE2 is connected to CE2.

- PE3 is connected to CE4.

For legacy VPWS configuration, perform the following taks:

1. Configure a cross-connect (xconnect) group for VPWS.
2. Configure a name for xconnect in the mp2mp mode.
3. Configure BGP autodiscovery.
4. Enable BGP signaling.
5. Configure the local CE ID.
6. Configure an interface with the remote CE ID.

The VPWS cross-connect is established between the local and remote CEs.

For migrating the PEs from legacy VPWS to EVPN-VPWS, perform the following taks:

1. In the existing VPWS cross-connect, enable the VPWS seamless integration on the local CE.
2. Configure the interface used in VPWS configuration with the remote CE ID.
3. Configure a cross-connect (xconnect) group for EVPN-VPWS.
4. Configure a name for xconnect in the p2p mode.
5. Assign the interface used in VPWS configuration.
6. Enable EVPN-VPWS on the p2p xconnect.

EVPN-VPWS service is established between the local and remote CEs.

Migration of PE1

In this example, both legacy VPWS and EVPN-VPWS coexist on PE1.

```
/* VPWS configuration on PE1 */
Router# configure
Router(config)# l2vpn xconnect group legacy-vpws
Router(config-l2vpn-xc)# mp2mp vpws1
Router(config-l2vpn-xc-mp2mp)# autodiscovery bgp
Router(config-l2vpn-xc-mp2mp-ad)# signaling-protocol bgp
Router(config-l2vpn-xc-mp2mp-ad-sig)# ce-id 1
Router(config-l2vpn-xc-mp2mp-ad-sig-ce)# interface Bundle-Ether1.1 remote-ce-id 2
Router(config-l2vpn-xc-mp2mp-ad-sig-ce)# commit
Router(config-l2vpn-xc-mp2mp-ad-sig-ce)# exit
Router(config-l2vpn-xc-mp2mp-ad-sig)# ce-id 3
Router(config-l2vpn-xc-mp2mp-ad-sig-ce)# interface Bundle-Ether1.2 remote-ce-id 4
Router(config-l2vpn-xc-mp2mp-ad-sig-ce)# commit
```

```
/* Migrate VPWS to EVPN-VPWS on PE1 */
Router# configure
Router(config)# l2vpn xconnect group legacy-vpws
Router(config-l2vpn-xc)# mp2mp vpws1
Router(config-l2vpn-xc-mp2mp)# autodiscovery bgp
Router(config-l2vpn-xc-mp2mp-ad)# signaling-protocol bgp
Router(config-l2vpn-xc-mp2mp-ad-sig)# ce-id 1
```

```
Router(config-l2vpn-xc-mp2mp-ad-sig-ce)# vpws-seamless-integration
Router(config-l2vpn-xc-mp2mp-ad-sig-ce)# interface Bundle-Ether1.1 remote-ce-id 2
Router(config-l2vpn-xc-mp2mp-ad-sig-ce)# commit
Router(config-l2vpn-xc-mp2mp-ad-sig-ce)# root

Router(config)# l2vpn xconnect group evpn-vpws
Router(config-l2vpn-xc)# p2p evpn1
Router(config-l2vpn-xc-p2p)# interface Bundle-Ether 1.1
Router(config-l2vpn-xc-p2p)# neighbor evpn evi 4 service 5
Router(config-l2vpn-xc-p2p-pw)# commit


/* VPWS configuration on PE2 */
Router# configure
Router(config)# l2vpn xconnect group legacy-vpws
Router(config-l2vpn-xc)# mp2mp vpws1
Router(config-l2vpn-xc-mp2mp)# autodiscovery bgp
Router(config-l2vpn-xc-mp2mp-ad)# signaling-protocol bgp
Router(config-l2vpn-xc-mp2mp-ad-sig)# ce-id 2
Router(config-l2vpn-xc-mp2mp-ad-sig-ce)# interface Bundle-Ether1.1 remote-ce-id 1
Router(config-l2vpn-xc-mp2mp-ad-sig-ce)# commit


/* VPWS configuration on PE3 */
Router# configure
Router(config)# l2vpn xconnect group legacy-vpws
Router(config-l2vpn-xc)# mp2mp vpws1
Router(config-l2vpn-xc-mp2mp)# autodiscovery bgp
Router(config-l2vpn-xc-mp2mp-ad)# signaling-protocol bgp
Router(config-l2vpn-xc-mp2mp-ad-sig)# ce-id 4
Router(config-l2vpn-xc-mp2mp-ad-sig-ce)# interface Bundle-Ether1.2 remote-ce-id 3
Router(config-l2vpn-xc-mp2mp-ad-sig-ce)# commit
```

Verification

As PE2 and PE3 are not migrated to EVPN-VPWS, legacy VPWS continues to run between the PE devices. The following show output indicates that only legacy VPWS is up and EVPN-VPWS is down on BE1.1.

```
Router# show l2vpn xconnect

Legend: ST = State, UP = Up, DN = Down, AD = Admin Down, UR = Unresolved,
        SB = Standby, SR = Standby Ready, (PP) = Partially Programmed,
        LU = Local Up, RU = Remote Up, CO = Connected, (SI) = Seamless Inactive

XConnect                   Segment 1                       Segment 2
Group        Name       ST   Description            ST       Description            ST
---------------------------  -----------------------------   -----------------------------
evpn-vpws    evpn1      DN   BE1.1                  UP       EVPN 4,5,24004          DN
-------------------------------------------------------------------------------------------
legacy-vpws  vpws1      UP   BE1.1                  UP       192.168.0.4     534296  UP
-------------------------------------------------------------------------------------------
legacy-vpws  vpws1      UP   BE1.2                  UP       192.168.12.110  685694  UP
-------------------------------------------------------------------------------------------
```

Migration of PE1 and PE2

In this example, both legacy VPWS and EVPN-VPWS coexist on PE1. PE2 is migrated to EVPN-VPWS.

```
/* VPWS configuration on PE1 */
Router# configure
```

```
Router(config)# l2vpn xconnect group legacy-vpws
Router(config-l2vpn-xc)# mp2mp vpws1
Router(config-l2vpn-xc-mp2mp)# autodiscovery bgp
Router(config-l2vpn-xc-mp2mp-ad)# signaling-protocol bgp
Router(config-l2vpn-xc-mp2mp-ad-sig)# ce-id 1
Router(config-l2vpn-xc-mp2mp-ad-sig-ce)# interface Bundle-Ether1.1 remote-ce-id 2
Router(config-l2vpn-xc-mp2mp-ad-sig-ce)# commit
Router(config-l2vpn-xc-mp2mp-ad-sig-ce)# exit
Router(config-l2vpn-xc-mp2mp-ad-sig)# ce-id 3
Router(config-l2vpn-xc-mp2mp-ad-sig-ce)# interface Bundle-Ether1.2 remote-ce-id 4
Router(config-l2vpn-xc-mp2mp-ad-sig-ce)# commit

/* Migrate VPWS to EVPN-VPWS on PE1 */
Router# configure
Router(config)# l2vpn xconnect group legacy-vpws
Router(config-l2vpn-xc)# mp2mp vpws1
Router(config-l2vpn-xc-mp2mp)# autodiscovery bgp
Router(config-l2vpn-xc-mp2mp-ad)# signaling-protocol bgp
Router(config-l2vpn-xc-mp2mp-ad-sig)# ce-id 1
Router(config-l2vpn-xc-mp2mp-ad-sig-ce)# vpws-seamless-integration
Router(config-l2vpn-xc-mp2mp-ad-sig-ce)# interface Bundle-Ether1.1 remote-ce-id 2
Router(config-l2vpn-xc-mp2mp-ad-sig-ce)# commit
Router(config-l2vpn-xc-mp2mp-ad-sig-ce)# root

Router(config)# l2vpn xconnect group evpn-vpws
Router(config-l2vpn-xc)# p2p evpn1
Router(config-l2vpn-xc-p2p)# interface Bundle-Ether 1.1
Router(config-l2vpn-xc-p2p)# neighbor evpn evi 4 service 5
Router(config-l2vpn-xc-p2p-pw)# commit


/* Migrate VPWS to EVPN-VPWS on PE2 */
Router# configure
Router(config)# l2vpn xconnect group legacy-vpws
Router(config-l2vpn-xc)# mp2mp vpws1
Router(config-l2vpn-xc-mp2mp)# autodiscovery bgp
Router(config-l2vpn-xc-mp2mp-ad)# signaling-protocol bgp
Router(config-l2vpn-xc-mp2mp-ad-sig)# ce-id 2
Router(config-l2vpn-xc-mp2mp-ad-sig-ce)# vpws-seamless-integration
Router(config-l2vpn-xc-mp2mp-ad-sig-ce)# interface Bundle-Ether1.1 remote-ce-id 1
Router(config-l2vpn-xc-mp2mp-ad-sig-ce)# commit
Router(config-l2vpn-xc-mp2mp-ad-sig-ce)# root

Router(config)# l2vpn xconnect group evpn-vpws
Router(config-l2vpn-xc)# p2p evpn1
Router(config-l2vpn-xc-p2p)# interface Bundle-Ether 1.1
Router(config-l2vpn-xc-p2p)# neighbor evpn evi 4 service 5
Router(config-l2vpn-xc-p2p-pw)# commit
```

Verification

After the migration, legacy VPWS and EVPN-VPWS coexist on PE1. PE2 is migrated to EVPN-VPWS and PE3 runs with legacy VPWS.

EVPN-VPWS service runs between PE1 and PE2.

Legacy VPWS service runs between PE1 and PE3.

The following example shows that EVPN-VPWS is up on BE1.1. The legacy VPWS is also advertised on BE1.1 with the status as Standby (**SB(SI)**).

```
Router# show l2vpn xconnect

Legend: ST = State, UP = Up, DN = Down, AD = Admin Down, UR = Unresolved,
        SB = Standby, SR = Standby Ready, (PP) = Partially Programmed,
        LU = Local Up, RU = Remote Up, CO = Connected, (SI) = Seamless Inactive

XConnect                   Segment 1                        Segment 2
Group        Name       ST   Description            ST       Description            ST
---------------------------  -----------------------------   -----------------------------
evpn-vpws    evpn1      UP   BE1.1                  UP       EVPN 4,5,24004          UP
-------------------------------------------------------------------------------------------
legacy-vpws  vpws1      DN   BE1.1                  SB(SI)   192.168.0.4     534296  UP
-------------------------------------------------------------------------------------------
legacy-vpws  vpws1      UP   BE1.2                  UP       192.168.12.110  685694  UP
-------------------------------------------------------------------------------------------
```

Use the **show l2vpn forwarding interface** *interface-type interface-path-id* **detail location** *node-id* command to identify whether EVPN-VPWS or VPWS is used for forwarding the traffic.

In this example, **`evi: 1`** indicates that EVPN-VPWS is used for forwarding the traffic.

```
Router# show l2vpn forwarding interface Bundle-Ether1.1 detail location 0/2/CPU0
Wed Apr 28 09:08:37.512 EDT
Local interface: Bundle-Ether1.1, Xconnect id: 0x800001, Status: up
  Segment 1
    AC, Bundle-Ether1.1, status: Bound
    Statistics:
      packets: received 0, sent 0
      bytes: received 0, sent 0
  Segment 2
    MPLS, Destination address: 192.168.0.4, evi: 4, ac-id: 5, status: Bound
Pseudowire label: 24001
    Control word enabled
    Statistics:
      packets: received 0, sent 0
      bytes: received 0, sent 0
```

In this example, **`pw-id: 1`** indicates that VPWS is used for forwarding the traffic.

```
Router# show l2vpn forwarding interface interface Bundle-Ether1.1  detail location 0/2/CPU0
Wed Apr 28 09:09:45.204 EDT
Local interface: Bundle-Ether1.1, Xconnect id: 0x800001, Status: up
  Segment 1
    AC, Bundle-Ether1.1, status: Bound
    Statistics:
      packets: received 0, sent 0
      bytes: received 0, sent 0
  Segment 2
    MPLS, Destination address: 192.168.0.4, pw-id: 1, status: Bound
Pseudowire label: 24000
    Control word disabled
    Statistics:
      packets: received 0, sent 0
      bytes: received 0, sent 0
```

Use the **l2vpn logging pseudowire** command to track the migration of AC from one PW to another.

```
Router(config)# l2vpn logging pseudowire
RP/0/0/CPU0:Jan 18 15:35:15.607 EST:
l2vpn_mgr[1234]: %L2-EVPN-5-VPWS_SEAMLESS_INTEGRATION_STATE_CHANGE :
```

```
GigabitEthernet0/2/0/8.1 - Active XC is now service-1:evpn-vpws-1, standby XC is
service-1:legacy-vpws-1
```

Migration of PE1, PE2, and PE3

In this example, both legacy VPWS and EVPN-VPWS coexist on PE1. PE2 and PE3 are migrated to EVPN-VPWS.

```
/* VPWS configuration on PE1 */
Router# configure
Router(config)# l2vpn xconnect group legacy-vpws
Router(config-l2vpn-xc)# mp2mp vpws1
Router(config-l2vpn-xc-mp2mp)# autodiscovery bgp
Router(config-l2vpn-xc-mp2mp-ad)# signaling-protocol bgp
Router(config-l2vpn-xc-mp2mp-ad-sig)# ce-id 1
Router(config-l2vpn-xc-mp2mp-ad-sig-ce)# interface Bundle-Ether1.1 remote-ce-id 2
Router(config-l2vpn-xc-mp2mp-ad-sig-ce)# commit
Router(config-l2vpn-xc-mp2mp-ad-sig-ce)# exit
Router(config-l2vpn-xc-mp2mp-ad-sig)# ce-id 3
Router(config-l2vpn-xc-mp2mp-ad-sig-ce)# interface Bundle-Ether1.2 remote-ce-id 4
Router(config-l2vpn-xc-mp2mp-ad-sig-ce)# commit

/* Migrate VPWS to EVPN-VPWS on PE1 */
Router# configure
Router(config)# l2vpn xconnect group legacy-vpws
Router(config-l2vpn-xc)# mp2mp vpws1
Router(config-l2vpn-xc-mp2mp)# autodiscovery bgp
Router(config-l2vpn-xc-mp2mp-ad)# signaling-protocol bgp
Router(config-l2vpn-xc-mp2mp-ad-sig)# ce-id 1
Router(config-l2vpn-xc-mp2mp-ad-sig-ce)# vpws-seamless-integration
Router(config-l2vpn-xc-mp2mp-ad-sig-ce)# interface Bundle-Ether1.1 remote-ce-id 2
Router(config-l2vpn-xc-mp2mp-ad-sig-ce)# commit
Router(config-l2vpn-xc-mp2mp-ad-sig-ce)# exit
Router(config-l2vpn-xc-mp2mp-ad-sig)# ce-id 3
Router(config-l2vpn-xc-mp2mp-ad-sig-ce)# vpws-seamless-integration
Router(config-l2vpn-xc-mp2mp-ad-sig-ce)# interface Bundle-Ether1.2 remote-ce-id 4
Router(config-l2vpn-xc-mp2mp-ad-sig-ce)# commit
Router(config-l2vpn-xc-mp2mp-ad-sig-ce)# root

Router(config)# l2vpn xconnect group evpn-vpws
Router(config-l2vpn-xc)# p2p evpn1
Router(config-l2vpn-xc-p2p)# interface Bundle-Ether 1.1
Router(config-l2vpn-xc-p2p)# neighbor evpn evi 4 service 5
Router(config-l2vpn-xc-p2p-pw)# commit
Router(config-l2vpn-xc-p2p-pw)# root

Router(config)# l2vpn xconnect group evpn-vpws
Router(config-l2vpn-xc)# p2p evpn2
Router(config-l2vpn-xc-p2p-pw)# exit
Router(config-l2vpn-xc-p2p)# interface Bundle-Ether 1.2
Router(config-l2vpn-xc-p2p)# neighbor evpn evi 4 service 7
Router(config-l2vpn-xc-p2p-pw)# commit



/* Migrate VPWS to EVPN-VPWS on PE3 */
Router# configure
Router(config)# l2vpn xconnect group legacy-vpws
Router(config-l2vpn-xc)# mp2mp vpws1
Router(config-l2vpn-xc-mp2mp)# autodiscovery bgp
Router(config-l2vpn-xc-mp2mp-ad)# signaling-protocol bgp
Router(config-l2vpn-xc-mp2mp-ad-sig)# ce-id 4
```

```
Router(config-l2vpn-xc-mp2mp-ad-sig-ce)# vpws-seamless-integration
Router(config-l2vpn-xc-mp2mp-ad-sig-ce)# interface Bundle-Ether1.2 remote-ce-id 3
Router(config-l2vpn-xc-mp2mp-ad-sig-ce)# commit
Router(config-l2vpn-xc-mp2mp-ad-sig-ce)# root

Router(config)# l2vpn xconnect group evpn-vpws
Router(config-l2vpn-xc)# p2p evpn2
Router(config-l2vpn-xc-p2p)# interface Bundle-Ether 1.2
Router(config-l2vpn-xc-p2p)# neighbor evpn evi 4 service 7
Router(config-l2vpn-xc-p2p-pw)# commit
```

Verification

After migration, all the PE devices forward traffic between them using EVPN-VPWS.

The following example shows that EVPN-VPWS is up and legacy VPWS is down.

```
Router# show l2vpn xconnect

Legend: ST = State, UP = Up, DN = Down, AD = Admin Down, UR = Unresolved,
        SB = Standby, SR = Standby Ready, (PP) = Partially Programmed,
        LU = Local Up, RU = Remote Up, CO = Connected, (SI) = Seamless Inactive

XConnect                   Segment 1                       Segment 2
Group        Name       ST   Description            ST       Description            ST
-------------------------  -----------------------------   ------------------------------
evpn-vpws    evpn1      UP   BE1.1                  UP       EVPN 4,5,24004          UP
-------------------------------------------------------------------------------------------
legacy-vpws  vpws1      DN   BE1.1                  UP       192.168.0.4     534296  DN
-------------------------------------------------------------------------------------------
evpn-vpws    evpn2      UP   BE1.2                  UP       EVPN 4,7,24008          UP
-------------------------------------------------------------------------------------------
legacy-vpws  vpws1      DN   BE1.2                  UP       192.168.12.110  685694  DN
-------------------------------------------------------------------------------------------
```

TLDP PW to EVPN-VPWS Migration

Similar to migrating VPWS to EVPN, you can also migrate Targeted Label Distribution Protocol (TLDP) PW to EVPN-VPWS on all the PE routers incrementally.

You can perform this task on all the PE routers incrementaly. The following configuration example shows the TLDP PW to EVPN-VPWS migration on PE1:

```
Router# configure
Router(config)# l2vpn xconnect group 1
Router(config-l2vpn-xc)# p2p p1
Router(config-l2vpn-xc-p2p)# interface BE1.1
Router(config-l2vpn-xc-p2p)# neighbor 10.0.0.1 pw-id 1
Router(config-l2vpn-xc-p2p-pw)# exit
Router(config-l2vpn-xc-p2p)# vpws-seamless-integration
```