MPLS Traffic Engineering: RSVP Hello State Timer

First Published: August 2, 2004
Last Updated: February 27, 2009

The MPLS Traffic Engineering: RSVP Hello State Timer feature detects when a neighbor is down and quickly triggers a state timeout, which frees resources such as bandwidth that can be reused by other label switched paths (LSPs).

RSVP hellos can be used to detect when a neighboring node is down. The hello state timer then triggers a state timeout. As a result, network convergence time is reduced, and nodes can forward traffic on alternate paths or assist in stateful switchover (SSO) operation.

Finding Feature Information

Your software release may not support all the features documented in this module. For the latest feature information and caveats, see the release notes for your platform and software release. To find information about the features documented in this module, and to see a list of the releases in which each feature is supported, see the "Feature Information for MPLS Traffic Engineering: RSVP Hello State Timer" section on page 12.

Use Cisco Feature Navigator to find information about platform support and Cisco IOS and Catalyst OS software image support. To access Cisco Feature Navigator, go to http://www.cisco.com/go/cfn. An account on Cisco.com is not required.

Contents

- Prerequisites for MPLS Traffic Engineering: RSVP Hello State Timer, page 2
- Restrictions for MPLS Traffic Engineering: RSVP Hello State Timer, page 2
- Information About MPLS Traffic Engineering: RSVP Hello State Timer, page 2
- How to Configure MPLS Traffic Engineering: RSVP Hello State Timer, page 5
- Configuration Examples for MPLS Traffic Engineering: RSVP Hello State Timer, page 10

Americas Headquarters:
Cisco Systems, Inc., 170 West Tasman Drive, San Jose, CA 95134-1706 USA

- Additional References, page 11
- Command Reference, page 12

Prerequisites for MPLS Traffic Engineering: RSVP Hello State Timer

Perform the following tasks on routers before configuring the MPLS Traffic Engineering: RSVP Hello State Timer feature:

- Configure Resource Reservation Protocol (RSVP).
- Enable Multiprotocol Label Switching (MPLS).
- Configure traffic engineering (TE).
- Enable hellos for state timeout.

Restrictions for MPLS Traffic Engineering: RSVP Hello State Timer

- Hellos for state timeout are dependent on graceful restart, if it is configured; however, graceful restart is independent of hellos for state timeout.
- Unnumbered interfaces are not supported.
- Hellos for state timeout are configured on a per-interface basis.

Information About MPLS Traffic Engineering: RSVP Hello State Timer

- Hellos for State Timeout, page 2

Hellos for State Timeout

When RSVP signals a TE LSP and there is a failure somewhere along the path, the failure can remain undetected for as long as two minutes. During this time, bandwidth is held by the nonfunctioning LSP on the nodes downstream from the point of failure along the path with the state intact. If this bandwidth is needed by headend tunnels to signal or resignal LSPs, tunnels may fail to come up for several minutes thereby negatively affecting convergence time.

Hellos enable RSVP nodes to detect when a neighboring node is not reachable. After a certain number of intervals, hellos notice that a neighbor is not responding and delete its state. This action frees the node's resources to be reused by other LSPs.

Hellos must be configured both globally on the router and on the specific interface to be operational.

Nonfast-Reroutable TE LSP

Figure 1 shows a nonfast-reroutable TE LSP from Router 1 to Router 3 via Router 2.

Figure 1 Nonfast-Reroutable TE LSP

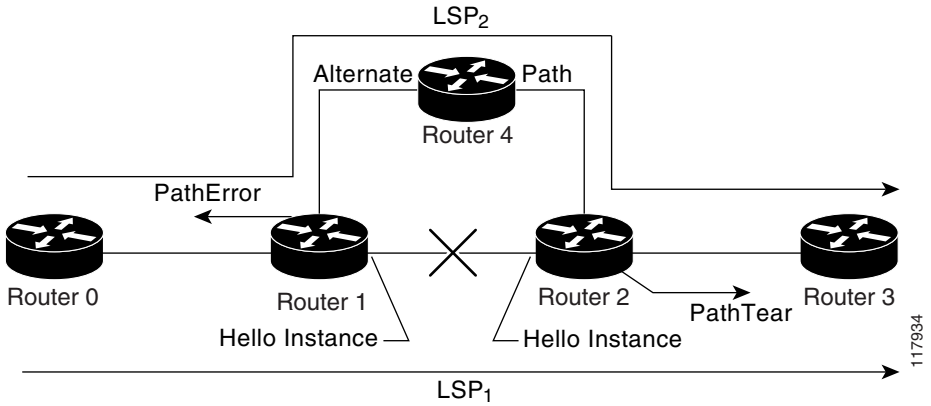

Assume that the link between Router 1 and Router 2 fails. This type of problem can be detected by various means including interface failure, Interior Gateway Protocol (IGP) (Open Shortest Path First (OSPF) or Intermediate System-to-Intermediate System (IS-IS)), and RSVP hellos. However, sometimes interface failure cannot be detected; for example, when Router 1 and Router 2 are interconnected through a Layer 2 switch. The IGP may be slow detecting the failure. Or there may be no IGP running between Router 1 and Router 2; for example, between two Autonomous System Boundary Routers (ASBRs) interconnecting two autonomous systems.

If hellos were running between Router 1 and Router 2, each router would notice that communication was lost and time out the state immediately.

Router 2 sends a delayed PathTear message to Router 3 so that the state can be deleted on all nodes thereby speeding up the convergence time.

Note The PathTear message is delayed one second because on some platforms data is being forwarded even after the control plane is down.

Router 1 sends a destructive PathError message upstream to Router 0 with error code ROUTING_PROBLEM and error value NO_ROUTE.

LSP1 goes from Router 0 to Router 1 to Router 2 to Router 3; LSP 2 goes from Router 0 to Router 1 to Router 4 to Router 2 to Router 3.

Hello Instance

A hello instance implements RSVP hellos for a given router interface address and a remote IP address. A hello instance is expensive because of the large number of hello requests that are sent and the strains they put on the router resources. Therefore, you should create a hello instance only when it is needed to time out state and delete the hello instance when it is no longer necessary.

Fast-Reroutable TE LSP with Backup Tunnel

Figure 2 shows a fast reroutable TE LSP with a backup tunnel from Router1 to Router 2 to Router 3.

Figure 2 Fast Reroutable TE LSP with Backup Tunnel

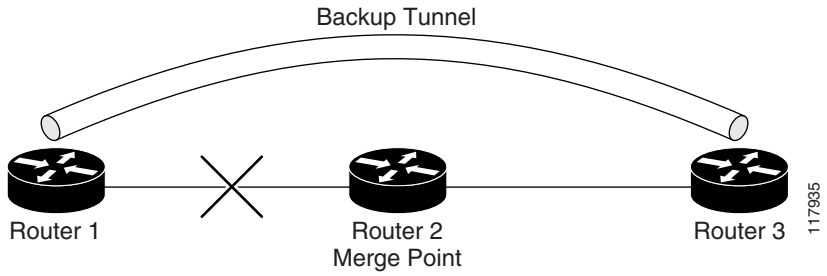

This TE LSP has a backup tunnel from Router 1 to Router 3 protecting the fast reroutable TE LSP against a failure in the Router 1 to Router 2 link and node Router 2. However, assume that a failure occurs in the link connecting Router 1 to Router 2. If hellos were running between Router 1 and Router 2, the routers would notice that the link is down, but would not time out the state. Router 2 notices the failure, but cannot time out the TE LSP because Router 2 may be a merge point, or another downstream node may be a merge point. Router 1 notices the failure and switches to the backup LSP; however, Router 1 cannot time out the state either.

Note A hello instance is not created in the preceding scenario because the neighbor is down and the hello instance cannot take action.

Fast-Reroutable TE LSP Without Backup Tunnel

On a fast-reroutable TE LSP with no backup tunnel, a hello instance can be created with the neighbor downstream (next hop (NHOP)). On a nonfast-reroutable TE LSP, a hello instance can be created with the neighbor downstream (NHOP) and the neighbor upstream (previous hop (PHOP)). This is in addition to the existing hellos for Fast Reroute.

Note If both Fast Reroute and hellos for state timeout hello instances are needed on the same link, only one hello instance is created. It will have the Fast Reroute configuration including interval, missed refreshes, and differentiated services code point (DSCP). When a neighbor is down, Fast Reroute and the hello state timer take action.

Figure 3 shows a fast-reroutable TE LSP. without a backup tunnel, from Router 1 (the point of local repair (PLR)), to Router 2 to Router 3.

Figure 3 Fast Reroutable TE LSP Without Backup Tunnel

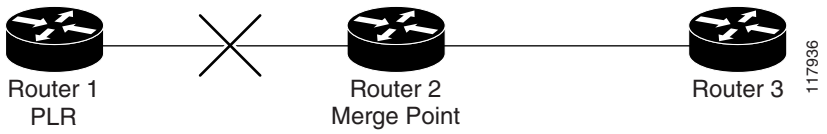

Assume that a failure occurs in the link connecting Router 1 to Router 3. Router 1 can time out the state for the TE LSP because Router 1 knows there is no backup tunnel. However, Router 2 cannot time out the state because Router 2 does not know whether a backup tunnel exists. Also, Router 2 may be a merge point, and therefore cannot time out the state.

Note A hello instance is not created in the preceding scenario because the neighbor is down and the hello instance cannot take action.

How to Configure MPLS Traffic Engineering: RSVP Hello State Timer

Note The following tasks also enable Fast Reroute; however, this section focuses on the RSVP hello state timer.

- Enabling the Hello State Timer Globally, page 5 (required)
- Enabling the Hello State Timer on an Interface, page 6 (required)
- Setting a DSCP Value on an Interface, page 7 (optional)
- Setting a Hello Request Interval on an Interface, page 8 (optional)
- Setting the Number of Hello Messages that can be Missed on an Interface, page 8 (optional)
- Verifying Hello for State Timer Configuration, page 9 (optional)

Enabling the Hello State Timer Globally

Perform this task to enable the RSVP hello state timer globally to reduce network convergence, allow nodes to forward traffic on alternate paths, or assist in stateful switchover (SSO) operation.

SUMMARY STEPS

1. **enable**
2. **configure terminal**
3. **ip rsvp signalling hello**
4. **end**

DETAILED STEPS

	Command or Action	Purpose
Step 1	**enable** **Example:** `Router> enable`	Enables privileged EXEC mode. • Enter your password if prompted.
Step 2	**configure terminal** **Example:** `Router# configure terminal`	Enters global configuration mode.
Step 3	**ip rsvp signalling hello** **Example:** `Router(config)# ip rsvp signalling hello`	Enables hellos for state timeout globally on a router.
Step 4	**end** **Example:** `Router(config)# end`	Exits to privileged EXEC mode.

Enabling the Hello State Timer on an Interface

SUMMARY STEPS

1. **enable**
2. **configure terminal**
3. **interface** *type number*
4. **ip rsvp signalling hello**
5. **end**

DETAILED STEPS

	Command or Action	Purpose
Step 1	**enable** **Example:** `Router> enable`	Enables privileged EXEC mode. • Enter your password if prompted.
Step 2	**configure terminal** **Example:** `Router# configure terminal`	Enters global configuration mode.
Step 3	**interface** *type number* **Example:** `Router(config)# interface Ethernet 0/0`	Enters interface configuration mode. • The *type number* arguments identify the interface to be configured.

	Command or Action	Purpose
Step 4	**ip rsvp signalling hello** **Example:** `Router(config-if)# ip rsvp signalling hello`	Enables hellos for state timeout on an interface.
Step 5	**end** **Example:** `Router(config-if)# end`	Exits to privileged EXEC mode.

Setting a DSCP Value on an Interface

SUMMARY STEPS

1. **enable**
2. **configure terminal**
3. **interface** *type number*
4. **ip rsvp signalling hello reroute dscp** *num*
5. **end**

DETAILED STEPS

	Command or Action	Purpose
Step 1	**enable** **Example:** `Router> enable`	Enables privileged EXEC mode. • Enter your password if prompted.
Step 2	**configure terminal** **Example:** `Router# configure terminal`	Enters global configuration mode.
Step 3	**interface** *type number* **Example:** `Router(config)# interface Ethernet 0/0`	Enters interface configuration mode. • The *type number* arguments identify the interface to be configured.
Step 4	**ip rsvp signalling hello reroute dscp** *num* **Example:** `Router(config-if)# ip rsvp signalling hello reroute dscp 30`	Sets a DSCP value for RSVP hello messages on an interface of a router from 0 to 63 with hellos for state timeout enabled.
Step 5	**end** **Example:** `Router(config-if)# end`	Exits to privileged EXEC mode.

Setting a Hello Request Interval on an Interface

SUMMARY STEPS

1. **enable**
2. **configure terminal**
3. **interface** *type number*
4. **ip rsvp signalling hello reroute refresh interval** *interval-value*
5. **end**

DETAILED STEPS

	Command or Action	Purpose
Step 1	**enable** **Example:** `Router> enable`	Enables privileged EXEC mode. • Enter your password if prompted.
Step 2	**configure terminal** **Example:** `Router# configure terminal`	Enters global configuration mode.
Step 3	**interface** *type number* **Example:** `Router(config)# interface Ethernet 0/0`	Enters interface configuration mode. • The *type number* argument identifies the interface to be configured.
Step 4	**ip rsvp signalling hello reroute refresh interval** *interval-value* **Example:** `Router(config-if)# ip rsvp signalling hello reroute refresh interval 5000`	Sets a hello request interval on an interface of a router with hellos for state timer enabled.
Step 5	**end** **Example:** `Router(config-if)# end`	Exits to privileged EXEC mode.

Setting the Number of Hello Messages that can be Missed on an Interface

Perform this task to set the number of consecutive hello messages that are lost (missed) before hello declares the neighbor down.

SUMMARY STEPS

1. **enable**
2. **configure terminal**

3. **interface** *type number*
4. **ip rsvp signalling hello reroute refresh misses** *msg-count*
5. **end**

DETAILED STEPS

	Command or Action	Purpose
Step 1	**enable** **Example:** `Router> enable`	Enables privileged EXEC mode. • Enter your password if prompted.
Step 2	**configure terminal** **Example:** `Router# configure terminal`	Enters global configuration mode.
Step 3	**interface** *type number* **Example:** `Router(config)# interface Ethernet 0/0`	Enters interface configuration mode. • The *type number* arguments identify the interface to be configured.
Step 4	**ip rsvp signalling hello reroute refresh misses** *msg-count* **Example:** `Router(config-if)# ip rsvp signalling hello reroute refresh misses 5`	Configures the number of consecutive hello messages that are lost before hello declares the neighbor down.
Step 5	**end** **Example:** `Router(config-if)# end`	Exits to privileged EXEC mode.

Verifying Hello for State Timer Configuration

SUMMARY STEPS

1. **enable**
2. **show ip rsvp hello**

DETAILED STEPS

	Command or Action	Purpose
Step 1	**enable** **Example:** `Router> enable`	(Optional) Enables privileged EXEC mode. • Enter your password if prompted.
Step 2	**show ip rsvp hello** **Example:** `Router# show ip rsvp hello`	Displays the status of RSVP TE hellos and statistics including hello state timer (reroute).

Configuration Examples for MPLS Traffic Engineering: RSVP Hello State Timer

• MPLS Traffic Engineering: RSVP Hello State Timer: Example, page 10

MPLS Traffic Engineering: RSVP Hello State Timer: Example

In the following example, the hello state timer is enabled globally and on an interface. Related parameters, including a DSCP value, a refresh interval, and a missed refresh limit, are set on an interface.

```
Router# configure terminal
Enter configuration commands, one per line.  End with CNTL/Z.
Router(config)# ip rsvp signalling hello
Router(config)# interface Ethernet 0/0
Router(config-if)# ip rsvp signalling hello
Router(config-if)# ip rsvp signalling hello reroute dscp 30
Router(config-if)# ip rsvp signalling hello reroute refresh interval 5000
Router(config-if)# ip rsvp signalling hello reroute refresh misses 5
Router(config-if)# end
```

The following example verifies the status of the hello state timer (reroute):

```
Router# show ip rsvp hello

Hello:
  Fast-Reroute/Reroute:Enabled
    Statistics:Enabled
  Graceful Restart:Enabled (help-neighbor only)
```

Additional References

Related Documents

Related Topic	Document Title
RSVP commands: complete command syntax, command mode, defaults, usage guidelines, and examples	*Cisco IOS Quality of Service Solutions Command Reference*
QoS features including signaling, classification, and congestion management	*Cisco IOS Quality of Service Solutions Configuration Guide*
Stateful Switchover	*Cisco IOS High Availability Configuration Guide*
MPLS Label Distribution Protocol	*MPLS Label Distribution Protocol (LDP) Overview*
Cisco nonstop forwarding	*Cisco Nonstop Forwarding*
Information on backup tunnels, link and node failures, RSVP hellos	*MPLS TE: Link and Node Protection, with RSVP Hellos Support (with Fast Tunnel Interface Down Detection)*
Graceful restart	*NSF/SSO - MPLS TE and RSVP Graceful Restart*

Standards

Standard	Title
No new or modified standards are supported by this feature, and support for existing standards has not been modified by this feature.	—

MIBs

MIB	MIBs Link
No new or modified MIBS are supported by this feature, and support for existing MIBs has not been modified by this feature.	To locate and download MIBs for selected platforms, Cisco IOS releases, and feature sets, use Cisco MIB Locator found at the following URL: http://www.cisco.com/go/mibs

RFCs

RFC	Title
RFC 3209	*RSVP-TE: Extensions to RSVP for LSP Tunnels*

Technical Assistance

Description	Link
The Cisco Support website provides extensive online resources, including documentation and tools for troubleshooting and resolving technical issues with Cisco products and technologies. To receive security and technical information about your products, you can subscribe to various services, such as the Product Alert Tool (accessed from Field Notices), the Cisco Technical Services Newsletter, and Really Simple Syndication (RSS) Feeds. Access to most tools on the Cisco Support website requires a Cisco.com user ID and password.	http://www.cisco.com/techsupport

Command Reference

The following commands are introduced or modified in the feature or features documented in this module. For information about these commands, see the *Cisco IOS Multiprotocol Label Switching Command Reference* at http://www.cisco.com/en/US/docs/ios/mpls/command/reference/mp_book.html. For information about all Cisco IOS commands, use the Command Lookup Tool at http://tools.cisco.com/Support/CLILookup or the *Cisco IOS Master Command List, All Releases*, at http://www.cisco.com/en/US/docs/ios/mcl/allreleasemcl/all_book.html.

- **ip rsvp signalling hello dscp**
- **ip rsvp signalling hello refresh interval**
- **ip rsvp signalling hello refresh misses**
- **ip rsvp signalling hello reroute dscp**
- **ip rsvp signalling hello reroute refresh interval**
- **ip rsvp signalling hello reroute refresh misses**
- **show ip rsvp hello**

Feature Information for MPLS Traffic Engineering: RSVP Hello State Timer

Table 1 lists the release history for this feature.

Not all commands may be available in your Cisco IOS software release. For release information about a specific command, see the command reference documentation.

Use Cisco Feature Navigator to find information about platform support and software image support. Cisco Feature Navigator enables you to determine which Cisco IOS and Catalyst OS software images support a specific software release, feature set, or platform. To access Cisco Feature Navigator, go to http://www.cisco.com/go/cfn. An account on Cisco.com is not required.

Note Table 1 lists only the Cisco IOS software release that introduced support for a given feature in a given Cisco IOS software release train. Unless noted otherwise, subsequent releases of that Cisco IOS software release train also support that feature.

Table 1 Feature Information for MPLS Traffic Engineering: RSVP Hello State Timer

Feature Name	Releases	Feature Information
MPLS Traffic Engineering: RSVP Hello State Timer	12.0(29)S 12.2(33)SRA 12.2(33)SXH 12.4(20)T	The MPLS Traffic Engineering: RSVP Hello State Timer feature detects when a neighbor is down and quickly triggers a state timeout, which frees resources such as bandwidth that can be reused by other label switched paths (LSPs). In 12.0(29)S, this feature was introduced. This feature was integrated into Cisco IOS Release 12.2(33)SRA. This feature was integrated into Cisco IOS Release 12.2(33)SXH. This feature was integrated into Cisco IOS Release 12.4(20)T.

Glossary

autonomous system—A collection of networks that share the same routing protocol and that are under the same system administration.

ASBR—autonomous system boundary router. A router that connects and exchanges information between two or more autonomous systems.

backup tunnel—An MPLS traffic engineering tunnel used to protect other (primary) tunnel traffic when a link or node failure occurs.

DSCP—differentiated services code point. Six bits in the IP header, as defined by the IETF. These bits determine the class of service provided to the IP packet.

Fast Reroute—A mechanism for protecting MPLS traffic engineering (TE) LSPs from link and node failure by locally repairing the LSPs at the point of failure, allowing data to continue to flow on them while their headend routers attempt to establish end-to-end LSPs to replace them. FRR locally repairs the protected LSPs by rerouting them over backup tunnels that bypass failed links or nodes.

graceful restart—A process for helping a neighboring Route Processor restart after a node failure has occurred.

headend—The router that originates and maintains a given LSP. This is the first router in the LSP's path.

IGP—Interior Gateway Protocol. Internet protocol used to exchange routing information within an autonomous system. Examples of common Internet IGPs include IGRP, OSPF, and RIP.

IS-IS—Intermediate System-to-Intermediate System. OSI link-state hierarchical routing protocol whereby Intermediate System (IS) routers exchange routing information based on a single metric to determine network topology.

instance—A mechanism that implements the RSVP hello extensions for a given router interface address and remote IP address. Active hello instances periodically send Hello Request messages, expecting Hello ACK messages in response. If the expected ACK message is not received, the active hello instance declares that the neighbor (remote IP address) is unreachable (that is, it is lost). This can cause LSPs crossing this neighbor to be fast rerouted.

label—A short, fixed-length data identifier that tells switching nodes how to forward data (packets or cells).

LDP—Label Distribution Protocol. The protocol that supports MPLS hop-by-hop forwarding by distributing bindings between labels and network prefixes. The Cisco proprietary version of this protocol is the Tag Distribution Protocol (TDP).

LSP—label switched path is a configured connection between two routers, in which MPLS is used to carry packets. The LSP is created by the concatenation of one or more label-switched hops, allowing a packet to be forwarded by swapping labels from one MPLS node to another MPLS node.

merge point—The backup tunnel's tail.

MPLS—Multiprotocol Label Switching. A method for forwarding packets (frames) through a network. MPLS enables routers at the edge of a network to apply labels to packets (frames). ATM switches or existing routers in the network core can switch packets according to the labels.

OSPF—Open Shortest Path First. A link-state routing protocol used for routing.

PLR—point of local repair. The headend of the backup tunnel.

RSVP—Resource Reservation Protocol. A protocol that supports the reservation of resources across an IP network. Applications running on IP end systems can use RSVP to indicate to other nodes the nature (bandwidth, jitter, maximum burst, and so on) of the packet streams they want to receive.

state—Information that a router must maintain about each LSP. The information is used for rerouting tunnels.

tailend—The router upon which an LSP is terminated. This is the last router in the LSP's path.

TE—traffic engineering. The techniques and processes used to cause routed traffic to travel through the network on a path other than the one that would have been chosen if standard routing methods had been used.

topology—The physical arrangement of network nodes and media within an enterprise networking structure.

tunnel—Secure communications path between two peers, such as two routers.

Cisco and the Cisco Logo are trademarks of Cisco Systems, Inc. and/or its affiliates in the U.S. and other countries. A listing of Cisco's trademarks can be found at www.cisco.com/go/trademarks. Third party trademarks mentioned are the property of their respective owners. The use of the word partner does not imply a partnership relationship between Cisco and any other company. (1005R)

Any Internet Protocol (IP) addresses used in this document are not intended to be actual addresses. Any examples, command display output, and figures included in the document are shown for illustrative purposes only. Any use of actual IP addresses in illustrative content is unintentional and coincidental.

© 2004–2009 Cisco Systems, Inc. All rights reserved.