High Availability on Cisco 4000 Series ISR and Cisco Catalyst 8000 Series Edge Platforms

The High Availability (HA) feature allows you to benefit from the failover capability of Cisco Unified Border Element (CUBE) on two routers, one active and one standby. When the active router goes down for any reason, the standby router takes over seamlessly, preserving and processing your calls.

Figure 1: Cisco CUBE High Availability

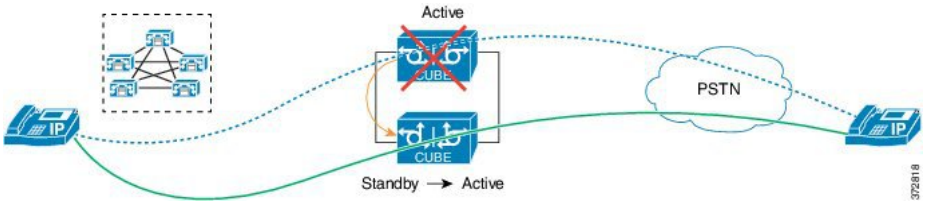

- About CUBE High Availability on Cisco 4000 Series ISR and Cisco Catalyst 8000 Series Edge Platforms, on page 1
- How to Configure CUBE High Availability on Cisco 4000 Series ISR and Cisco Catalyst 8000 Series Edge Platforms, on page 6
- Verify Your Configuration, on page 12
- Troubleshoot High Availability Issues, on page 20

About CUBE High Availability on Cisco 4000 Series ISR and Cisco Catalyst 8000 Series Edge Platforms

CUBE supports Box-to-box redundancy on Cisco 4000 Series Integrated Services Router (Cisco 4000 Series ISR), Cisco Catalyst 8300, 8200, and 8200-L Series Edge Platforms, and uses Redundancy Group Infrastructure to provide High Availability.

Box-to-Box Redundancy

Box-to-box redundancy enables configuring a pair of routers to act as back up for each other. In the router pair, the active router is determined based on the failover conditions. The router pair continuously exchange status messages. CUBE session information is checkpointed across the active and standby router. This enables

the standby router to immediately take over all CUBE call processing responsibilities when the active router becomes unavailable.

Redundancy Group (RG) Infrastructure

A group of redundant interfaces form a Redundancy Group. The active and standby routers are connected by a configurable control link and data synchronization link. The control link is used to communicate the redundancy state for each router. The data synchronization link is used to transfer stateful information to synchronize the stateful database for the calls and media flows. Each pair of redundant interfaces is configured with the same unique ID number, also known as the Redundancy Interface Identifier (RII).

A Virtual IP address (VIP) is configured on interfaces that connect to the external network. All signaling and media is sourced from and sent to the Virtual IP address. External devices such as Cisco Unified Communication Manager, uses VIP as the destination IP address for the calls traversing through Cisco UBE.

The following figure shows the redundancy group configured for a pair of routers with a single outgoing interface.

Figure 2: Redundancy Group Configuration

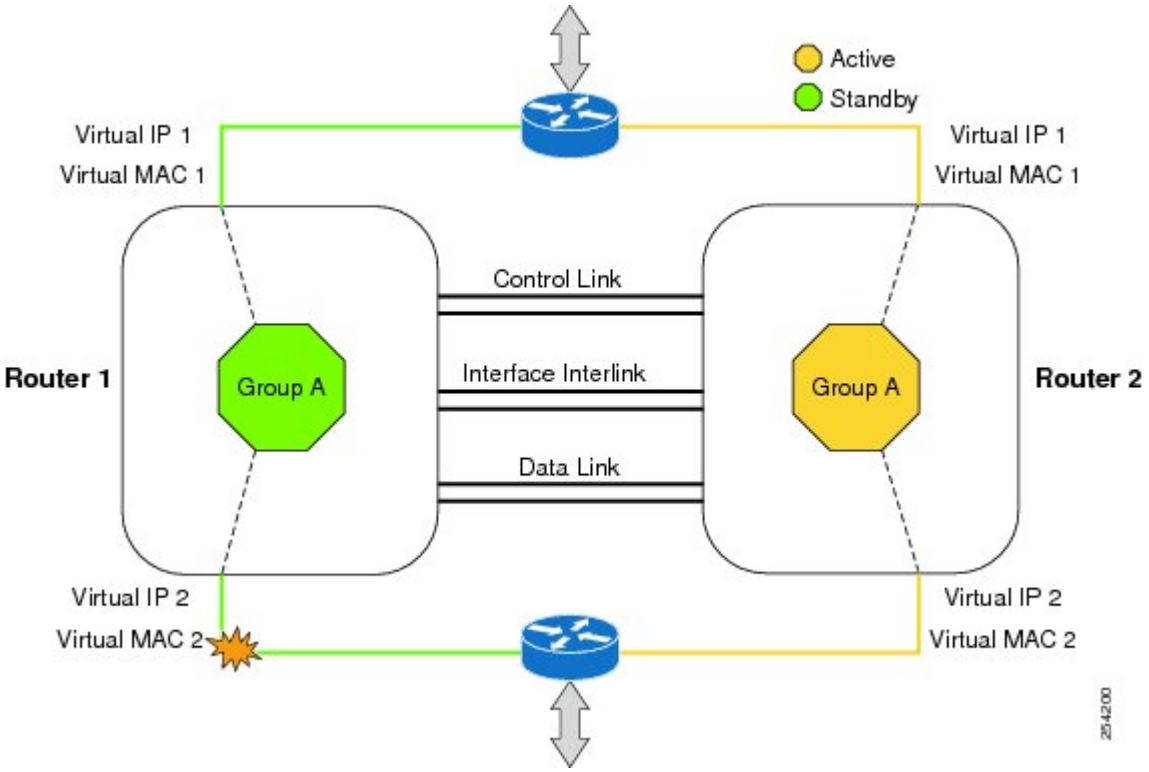

Network Topology

This section describes how to configure the following network topology. PSTN access uses an Active and Standby pair of routers in a SIP trunk deployment between a Cisco Unified Communications Manager (Unified CM) and a service provider SIP trunk.

Figure 3: Network Topology with switch between active and standby routers

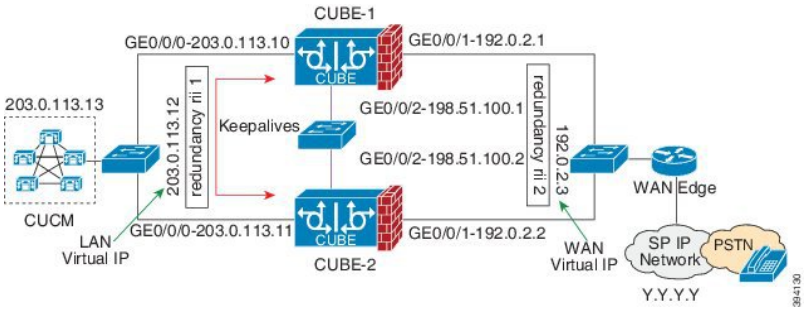

Figure 4: Network Topology with crossover cable between active and standby routers

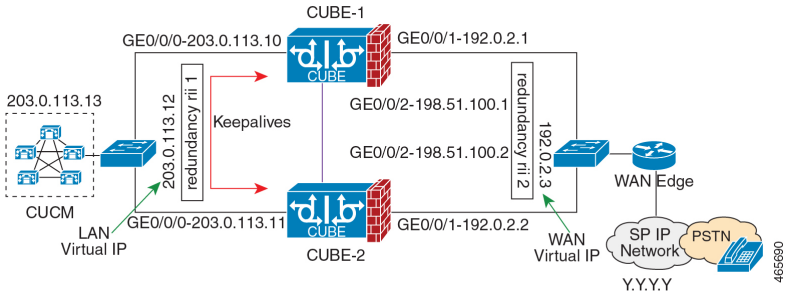

In this topology, both Active and Standby routers have the same configuration and connects through a physical switch across same interfaces. The topology is mandatory for the CUBE High Availability (HA) to work. For example, the CUBE-1 and CUBE-2 interface toward WAN must terminate on the same switch. Use Multiple interfaces or subinterfaces on either LAN or WAN side. Also, one CUBE has a lower IP address across all three interfaces on the same CUBE paltform.

We recommend that you keep the following in mind when configuring this topology:

- Connect the redundancy group control and data interfaces in the CUBE HA pair to the same physical switch to avoid any latency in the network.
- The RG control and data interfaces of the CUBE HA pair can be connected through a back-to-back cable or using a switch as shown in figures **Network Topology with switch between active and standby routers** and **Network Topology with crossover cable between active and standby routers**. However, it is recommended to use Portchannel for the RG control and data interfaces for redundancy. A single connection using back-to-back cable or switch presents a single point of failure due to a faulty cable, port, or switch, resulting in error state where both routers are Active.
- If the RG ID is the same for the two different CUBE HA pairs, keepalive interface for check-pointing the RG control and data, and traffic must be in a different subnet or VLAN.

Note This recommendation is applicable only if you connect using a switch, not by back-to-back cables.

- You can configure a maximum of two redundancy groups. Hence, there can be only two Active and Standby pairs within the same network.

Note This recommendation is applicable only if you connect using a switch, not by back-to-back cables.

- Source all signaling and media from and to the virtual IP address.
- Always save the running configuration to avoid losing it due to router reload during a failover.
- Virtual Routing and Forwarding
  - Define Virtual Router Forwarding (VRF) in the same order on both Active and Standby routers for an accurate synchronization of data.
  - You can configure VRFs only on the traffic interface (SIP and RTP). Do not configure VRF on redundancy group control and data interface.
  - VRF configurations on both the Active and Standby router must be identical. VRF IDs checkpoints for the calls before and after switchover (includes VRF-based RTP port range).
- Manually copy the configurations from one router to the other.
- Replicating the configuration on the Standby router does not commit to the startup configuration; it is the running configuration. You must run the **write memory** command to commit the changes that are synchronized from the Active router on the Standby router.

Considerations and Restrictions

The following is a list of further considerations and restrictions you should know before configuring this topology:

Considerations

- Only active calls are checkpointed (Calls that are connected with 200 OK or ACK transaction completed).
- When you apply and save the configuration for the first time, the platform must be reloaded.
- For H.323, and TCP-based calls, media preservation is supported after the failover, but session signaling is not preserved.
- If you have Cisco Unified Customer Voice Portal (CVP) in your network, we recommend that you configure TCP session transport for the SIP trunk between CVP and CUBE.
- Upon failover, the previously active CUBE reloads by design.
- CUBE uses the virtual IP address to communicate Smart Licensing information.
- For SIP-SIP TLS calls, configure both the active and standby CUBE as trust points to a common external CA Server.
- TCP sessions are not preserved during the failover. Remote user agents are expected to reestablish TCP sessions (using port 5060) before sending subsequent messages.
- Call Admission Control (CAC) state is maintained through switchover. After Stateful Switchover, no calls are allowed if the CAC limit is reached before the switchover.

- Up to six multimedia lines in the SDP are checkpointed for CUBE high availability. From Cisco IOS XE Release 3.17 onwards, SDP Passthru (up to two m-lines) calls are also checkpointed.
- Survivability.tcl preservation is supported from Cisco IOS XE Release 3.17 onwards for Unified Customer Voice Portal (CVP) deployments.
- SRTP-RTP, SRTP-SRTP, and SRTP Passthru are supported.

Note Redundancy control traffic that is exchanged between CUBE-1 and CUBE-2 is not secured natively and displays SRTP encryption keys in cleartext. If SRTP is used, you must secure this traffic by configuring a transport IPsec tunnel between the two interfaces that are used as the redundancy control link.

- Port channel is supported for both RG control data and traffic interfaces only from Cisco IOS XE 16.3.1 onwards.

Figure 5: Additional Supported Options for CUBE HA

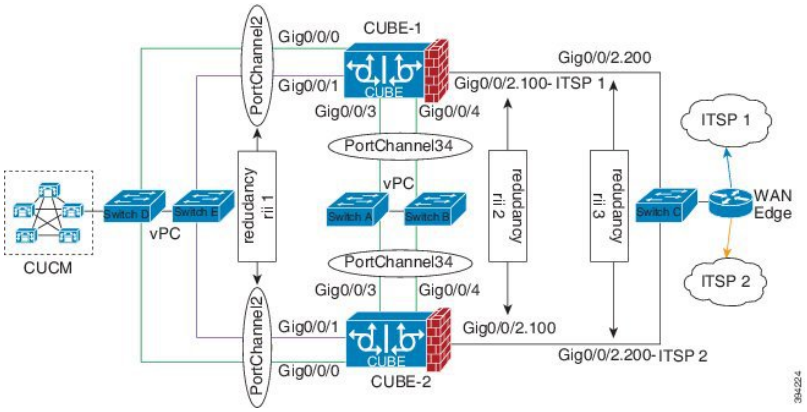

- LTI-based transcoder call flow preservation is supported from Cisco IOS XE Release 3.15 onwards and requires the same DSP module capacity on both active and standby in the same slot or subslot.
- While deploying High Availability pair with Application Centric Infrastructure (ACI), perform one of the following:
  - Disable IP data plane learning on the ACI VRF.

    Refer to IP Data-plane Learning for details.
  - Use an intermediate Layer 3 switch between the High Availability pair and the ACI deployment. This Layer 3 switch prevents the ACI from directly learning the CUBE IP address and its associated MAC addresses.

Restrictions

- IPv6 is not supported.
- All SCCP-based media resources (Conference bridge, Transcoding, Hardware MTP, and Software MTP) are not supported.

- Cisco Unified Survivable Remote Site Telephony (Cisco Unified SRST) or TDM Gateway colocation on CUBE HA is not supported.
- Routers connected through Metropolitan Area Network (MAN) Ethernet regardless of latency are not supported.
- Out-of-band DTMF (Notify or KPML) is not supported post switchover. Only rtp-nte to rtp-nte and voice-inband to voice-inband DTMF works after the switchover.
- Media-flow around and UC Services API (Cisco Unified Communications Manager Network-Based Recording) are not supported.
- You cannot terminate Wide Area Network (WAN) on CUBE directly or Data HA on either side. Both active and standby routers must be in the same Data Center and connected to the same physical switch.
- The Courtesy Callback (CCB) feature is not supported if a callback was registered with Cisco Unified Customer Voice Portal (CVP) and then a switchover was done on CUBE.
- You cannot configure a secondary IP address for the interfaces.
- If the redundancy group ID is same for the two different CUBE HA pairs, then the keepalive interface that is used for checkpointing RG control and data traffic must be in a different subnet or VLAN.
- Call Progress Analysis (CPA) calls (before transferred to the agent), SCCP-based media resources, Noise Reduction, Acoustic Shock Protection (ASP), and transrating calls are not supported.
- The failover time for a Box-to-box application is higher than the Inbox application.
- One CUBE must have lower IPs across all the three interfaces on the same CUBE platform. For instance, CUBE-1 must have lower IP addresses in Gig0/0/0 interface compared with CUBE-2 Gig0/0/0 interface.
- CUBE box-to-box high availability requires same priority and threshold to be configured on both CUBE-1 and CUBE-2.

How to Configure CUBE High Availability on Cisco 4000 Series ISR and Cisco Catalyst 8000 Series Edge Platforms

Before You Begin

- Use Cisco IOS-XE Release 3.11 and or later on both active and standby routers.
- Ensure that you have the required licenses for configuring high availability. For detailed information, see Cisco Unified Border Element Data Sheet.
- Connect the active and the standby router through a layer 2 connection for the control path.
- Configure the Network Time Protocol (NTP) or set the clock to be identical on both active and standby routers, to allow timestamps and call timers to match.
- The latency times must be minimal on all control and data links to prevent timeouts.
- Physically redundant links, such as Gigabit EtherChannel, must be used for the control and data paths.

Configure High Availability

SUMMARY STEPS

1. Configure the Redundancy Group (RG).
2. Configure interface tracking.
3. Configure the interfaces.
4. Configure SIP Binding.
5. (Optional) If H.323 calls are involved, enable H.323 binding.
6. Configure the Punt Policing feature.
7. Configure the RG group under **voice service voip**. This enables Box-to-box CUBE HA.
8. Configure the Media Inactivity timer.
9. Reload the router.
10. Configure the peer router.
11. Point the attached devices to the CUBE Virtual IP (VIP) address.

DETAILED STEPS

Step 1 Configure the Redundancy Group (RG).

a) Enter application redundancy mode.

Example:

```
Router>enable
Router#configure terminal
Router(config)#redundancy
Router(config-r)#mode none
Router(config-red)#application redundancy
Router(config-red-app)#group 1
```

b) Configure a name for the redundancy group.

Example:

```
Router(config-red-app-grp)#name cube-ha
```

where *cube-ha* is the name of the redundancy group.

c) Specify the initial priority and failover threshold for a redundancy group.

Example:

```
Router(config-red-app-grp)#priority 100 failover threshold 75
```

where 100 is the priority value and 75 is the threshold value. Both routers should have the same priority and threshold values.

d) Configure the timers for delay and reload.

Example:

```
Router(config-red-app-grp)#timers delay 30 reload 60
```

Delay timer which is the amount of time to delay the RG group's initialization and role negotiation after the interface comes up.

Default: 30 seconds. Range is 0-10000 seconds.

Reload timer is the amount of time to delay RG group initialization and role-negotiation after a reload.

Default: 60 seconds. Range is 0-10000 seconds.

e) Configure the interface used to exchange keepalive and hello messages between the router pair.

Example:

```
Router(config-red-app-grp)#control GigabitEthernet0/0/2 protocol 1
```

where GigabitEthernet0/0/2 is the interface and protocol 1 is the protocol instance that is attached to the interface.

f) Configure the interface that is used for checkpointing of data traffic.

Example:

```
Router(config-red-app-grp)#data GigabitEthernet0/0/2
```

g) Configure RG group tracking.

Example:

```
Router(config-red-app-grp)#track 1 shutdown
Router(config-red-app-grp)#track 2 shutdown
```

h) Specify the protocol instance that will be attached to a control interface and enters redundancy application protocol configuration mode.

Example:

```
Router(config-red-app-grp)#protocol 1
```

i) Configure the two timers for hellotime and holdtime.

Example:

```
Router(config-red-app-grp)#timers hellotime 3 holdtime 10
```

hellotime—Interval between successive hello messages.

Default is 3 seconds. Range is 250 milliseconds-254 seconds.

holdtime—The interval between the receipt of a hello message and the presumption that the sending router has failed. This duration has to be greater than the hellotime.

Default is 10 seconds. Range is 750 milliseconds-255 seconds.

We recommend that you configure the holdtime timer that is configured to be at least 3 times the value of the hellotime timer.

Step 2 Configure interface tracking.

The **track** command is used in RG to track the voice traffic interface state so that the active router initiates switchover after the traffic interface is down.

Configure the following commands at the global level to track the status of the interface.

Example:

```
Router(config)#track 1 interface GigabitEthernet0/0/0 line-protocol
Router(config)#track 2 interface GigabitEthernet0/0/1 line-protocol
```

Step 3 Configure the interfaces.

a) Configure the redundancy interface identifier for the redundancy group.

Required for generating a Virtual MAC (VMAC) address. You must use the same rii ID value on the interface of each router (active and standby) that has the same Virtual IP address.

If there is more than one Box-to-box HA pair on the same LAN, each pair MUST have unique rii IDs on their respective interfaces (to prevent collision). **show redundancy application group all** must indicate the correct local and peer information.

Example:

```
Router(config)#interface GigabitEthernet0/0/0
Router(config-if)#ip address 203.0.113.10 255.255.0.0
Router(config-if)#negotiation auto
Router(config-if)#redundancy rii 1

Router(config)#interface GigabitEthernet0/0/1
Router(config-if)#ip address 192.0.2.1 255.255.255.0
Router(config-if)#negotiation auto
Router(config-if)#redundancy rii 2
```

b) Associate the interface with the redundancy group created.

Example:

```
Router(config-if)#redundancy group 1 ip 203.0.113.12 exclusive
Router(config-if)#redundancy group 1 ip 192.0.2.3 exclusive
```

c) Configure interface for RG control and data.

Example:

```
Router(config)#interface GigabitEthernet0/0/2
Router(config-if)#ip address 198.51.100.1 255.255.255.0
Router(config-if)#media-type rj45
Router(config-if)#negotiation auto
```

Step 4 Configure SIP Binding.

Configure CUBE to bind SIP messages to the interface that is configured with a Virtual IP address (VIP) for the RG group employed.

Example:

```
Router(config)#dial-peer voice 1 voip
Router(config-dial-peer)#session protocol sipv2
Router(config-dial-peer)#incoming called-number 2000
Router(config-dial-peer)#voice-class sip bind control source-interface GigabitEthernet0/0/0
Router(config-dial-peer)#voice-class sip bind media source-interface GigabitEthernet0/0/0
Router(config-dial-peer)#codec g711ulaw
Router(config-dial-peer)#!

Router(config)#dial-peer voice 2 voip
Router(config-dial-peer)#destination-pattern 2000
Router(config-dial-peer)#session protocol sipv2
Router(config-dial-peer)#session target ipv4:203.0.113.13
Router(config-dial-peer)#voice-class sip bind control source-interface GigabitEthernet0/0/1
Router(config-dial-peer)#voice-class sip bind media source-interface GigabitEthernet0/0/1
Router(config-dial-peer)#codec g711ulaw
```

Step 5 (Optional) If H.323 calls are involved, enable H.323 binding.

Under the interface used by H.323, configure voip-bind with its source address equal to the interface's VIP for the RG group employed.

Example:

```
Router#voice service voip
Router(conf-voi-serv)#h323
Router(conf-serv-h323)#call preserve limit-media-detection
Router(conf-serv-h323)#no h225 timeout keepalive

Router(config)#interface GigabitEthernet0/0/0
Router(config-if)#ip address 203.0.113.10 255.255.0.0
Router(config-if)#media-type rj45
Router(config-if)#negotiation auto
Router(config-if)#redundancy rii 1
Router(config-if)#redundancy group 1 ip 9.13.25.123 exclusive
Router(config-if)#h323-gateway voip interface
Router(config-if)#h323-gateway voip bind srcaddr 203.0.113.12

Router(config)#interface GigabitEthernet0/0/1
Router(config-if)#ip address 192.0.2.1 255.255.255.0
Router(config-if)#media-type rj45
Router(config-if)#negotiation auto
Router(config-if)#redundancy rii 2
Router(config-if)#redundancy group 1 ip 192.0.2.3 exclusive
Router(config-if)#h323-gateway voip interface
Router(config-if)#h323-gateway voip bind srcaddr 192.0.2.3
```

Step 6 Configure the Punt Policing feature.

SIP packets towards the virtual IP address and physical IP address match different punt-cause codes. The punt-rate of the virtual IP address with a punt-cause of 60, is lower than the punt-rate of the physical IP address.

To ensure that the behaviour of the SIP packets towards virtual and physical IP address remains the same, you must increase the punt-rate of the virtual IP address by using the **platform punt-policer** command in global configuration mode.

Note For Cisco IOS XE Releases 16.6.7, 16.9.4, 16.11.1, 16.12.1, 17.1.1 and later releases, you do not need to increase the punt-rate.

Example:

```
Router(config)#platform punt-policer 60 40000
```

In the preceding example, the punt-rate of the virtual IP address (punt-cause 60) is increased from the default value of 2000–40000.

The following table provides details of the fields of the CLI.

Keyword	Description
platform punt-policer	Configures the Punt Policing feature.
60	*punt-cause*—Punt cause. Range is 1–107. Punt cause of the virtual interface is 60.
40000	*punt-rate*—Rate limit in packets per second. Range is 10–146484.

Note The default punt rate value of the virtual IP address and the physical IP address varies with the router platform.

Note The default and maximum setting are platform-specific. Default value is optimal for most deployments. Change the rate only when suggested by Cisco Support.

Step 7 Configure the RG group under **voice service voip**. This enables Box-to-box CUBE HA.

Example:

```
Router#voice service voip
Router(conf-voi-serv)#redundancy-group 1
```

Step 8 Configure the Media Inactivity timer.

The Media Inactivity Timer enables the active and standby router pair to monitor and disconnect calls if no Real-Time Protocol (RTP) packets are received within a configurable time period.

For the SIP calls, the switched over calls are cleared with signaling (as signaling information is preserved for switched calls).

The Media Inactivity Timer releases TCP-based and H.323-based calls. This is used to guard against any hung sessions resulting from the failover when a normal call disconnect does not clear the call.

You must configure the same duration for the Media Inactivity Timer on both routers. The default value is 30 seconds for SIP and H.323 calls. The sample configuration is as follows:

Example:

```
Router(config)#ip rtcp report interval 9000
Router(config)#gateway
Router(config-gateway)#media-inactivity-criteria all
Router(config-gateway)#timer receive-rtp 1200
Router(config-gateway)#timer receive-rtcp 5
```

SIP and H.323 call legs are cleared once the RTCP timer expires.

Step 9 Reload the router.

Once all the preceding configurations are completed, you must save the configurations, and reload the router.

Example:

```
Router>enable
Router#relaod
```

Step 10 Configure the peer router.

Follow the preceding steps to configure the standby router. Make sure that you use the correct IP addresses.

Step 11 Point the attached devices to the CUBE Virtual IP (VIP) address.

The IP-PBX, Unified SIP Proxy, or service provider must route the calls to CUBE's Virtual IP address.

HA configuration does not handle SIP and H.323 messages to the CUBE's physical IP addresses.

For H.323 calls, you must disable the keepalive messages in Unified CM configuration.

a. Go to **System** menu, and choose **Service Parameters**. At the bottom of the Service Parameters, enable **Advanced**.

b. Set the **Allow TCP KeepAlives for H323** to False.

c. After this setting is saved, restart the CallManager Services.

Configuration Examples

Example: Control Interface Protocol Configuration

```
Router#configure terminal
Router(config)#redundancy
Router(config-red)#mode none
Router(config-red)#application redundancy
Router(config-red-app)#protocol 4
Router(config-red-app-prot)#name rg1
Router(config-red-app-prot)#timers hellotime 3 holdtime 10
Router(config-red-app-prot)#authentication text password
```

Example: Redundancy Group Protocol Configuration

```
Router#configure terminal
Router(config)#redundancy
Router(red)#application redundancy
Router(config-red-app)#protocol 1
Router(config-red-app-prtcl)#name RG1
Router(config-red-app-prtcl)#timers hellotime 1 holdtime 3
Router(config-red-app-prtcl)#end
Router#configure terminal
Router(config)#redundancy
Router(red)#application redundancy
Router(config-red-app)#protocol 2
Router(config-red-app-prtcl)#name RG1
Router(config-red-app-prtcl)#end
```

Example: Redundant Traffic Interface Configuration

```
Router#configure terminal
Router(config)#interface GigabitEthernet 0/0/2
Router(config-if)#ip address 198.51.100.1 255.0.0.0
Router(config-if)#ip nat outside
Router(config-if)#ip virtual-reassembly
Router(config-if)#negotiation auto
Router(config-if)#redundancy rii 200
Router(config-if)#redundancy group 1 ip 198.51.100.50 exclusive decrement 10
```

Verify Your Configuration

All configuration commands in this task are optional. You can use the **show** commands in any order.

SUMMARY STEPS

1. **show redundancy application group** [*group-id* | **all**]
2. **show redundancy application transport** {**clients** | **group** [*group-id*]}

3. **show redundancy application protocol** {*protocol-id* | **group** [*group-id*]}
4. **show redundancy application faults group** [*group-id*]
5. **show redundancy application if-mgr group** [*group-id*]
6. **show redundancy application control-interface group** [*group-id*]
7. **show redundancy application data-interface group** [*group-id*]

DETAILED STEPS

Step 1 **show redundancy application group** [*group-id* | **all**]

Example:

```
Router#show redundancy application group
Group ID    Group Name                      State
--------    ----------                      -----
1           Generic-Redundancy-1            STANDBY
2           Generic-Redundancy2             ACTIVE
```

The following example shows the details of redundancy application group 1:

```
Router#show redundancy application group 1
Group ID:1
Group Name:Generic-Redundancy-1

Administrative State: No Shutdown
Aggregate operational state : Up
My Role: STANDBY
Peer Role: ACTIVE
Peer Presence: Yes
Peer Comm: Yes
Peer Progression Started: Yes

RF Domain: btob-one
RF state: STANDBY HOT
Peer RF state: ACTIVE
```

The following example shows the details of redundancy application group 2:

```
Router#show redundancy application group 2
Group ID:2
Group Name:Generic-Redundancy2

Administrative State: No Shutdown
Aggregate operational state : Up
My Role: ACTIVE
Peer Role: STANDBY
Peer Presence: Yes
Peer Comm: Yes
Peer Progression Started: Yes

RF Domain: btob-two
RF state: ACTIVE
Peer RF state: STANDBY HOT
```

Step 2 **show redundancy application transport** {**clients** | **group** [*group-id*]}

Example:

```
Router#show redundancy application transport client

Client          Conn#  Priority   Interface   L3        L4
( 0)RF            0      1          CTRL       IPV4      SCTP

( 1)MCP_HA        1      1          DATA       IPV4      UDP_REL

( 4)AR            0      1          ASYM       IPV4      UDP

( 5)CF            0      1          DATA       IPV4      SCTP
```

The following example shows configuration details for the redundancy application transport group:

```
Router#show redundancy application transport group

Transport Information for RG (1)
Client = RF
TI   conn_id my_ip           my_port  peer_ip         peer_por intf    L3      L4
0    0       1.1.1.1         59000    1.1.1.2         59000    CTRL    IPV4    SCTP
Client = MCP_HA
TI   conn_id my_ip           my_port  peer_ip         peer_por intf    L3      L4
1    1       9.9.9.2         53000    9.9.9.1         53000    DATA    IPV4    UDP_REL
Client = AR
TI   conn_id my_ip           my_port  peer_ip         peer_por intf    L3      L4
2    0       0.0.0.0         0        0.0.0.0         0        NONE_IN NONE_L3 NONE_L4
Client = CF
TI   conn_id my_ip           my_port  peer_ip         peer_por intf    L3      L4
3    0       9.9.9.2         59001    9.9.9.1         59001    DATA    IPV4    SCTP
Transport Information for RG (2)
Client = RF
TI   conn_id my_ip           my_port  peer_ip         peer_por intf    L3      L4
8    0       1.1.1.1         59004    1.1.1.2         59004    CTRL    IPV4    SCTP
Client = MCP_HA
TI   conn_id my_ip           my_port  peer_ip         peer_por intf    L3      L4
9    1       9.9.9.2         53002    9.9.9.1         53002    DATA    IPV4    UDP_REL
Client = AR
TI   conn_id my_ip           my_port  peer_ip         peer_por intf    L3      L4
10   0       0.0.0.0         0        0.0.0.0         0        NONE_IN NONE_L3 NONE_L4
Client = CF
TI   conn_id my_ip           my_port  peer_ip         peer_por intf    L3      L4
11   0       9.9.9.2         59005    9.9.9.1         59005    DATA    IPV4    SCTP
```

The following example shows the configuration details of redundancy application transport group 1:

```
Router#show redundancy application transport group 1

Transport Information for RG (1)
Client = RF
TI   conn_id my_ip           my_port  peer_ip         peer_por intf    L3      L4
0    0       1.1.1.1         59000    1.1.1.2         59000    CTRL    IPV4    SCTP
Client = MCP_HA
TI   conn_id my_ip           my_port  peer_ip         peer_por intf    L3      L4
1    1       9.9.9.2         53000    9.9.9.1         53000    DATA    IPV4    UDP_REL
Client = AR
TI   conn_id my_ip           my_port  peer_ip         peer_por intf    L3      L4
2    0       0.0.0.0         0        0.0.0.0         0        NONE_IN NONE_L3 NONE_L4
Client = CF
TI   conn_id my_ip           my_port  peer_ip         peer_por intf    L3      L4
3    0       9.9.9.2         59001    9.9.9.1         59001    DATA    IPV4    SCTP
```

The following example shows configuration details of redundancy application transport group 2:

```
Router#show redundancy application transport group 2
Transport Information for RG (2)
Client = RF
TI   conn_id my_ip          my_port  peer_ip         peer_por intf    L3      L4
8    0       1.1.1.1        59004    1.1.1.2         59004    CTRL    IPV4    SCTP
Client = MCP_HA
TI   conn_id my_ip          my_port  peer_ip         peer_por intf    L3      L4
9    1       9.9.9.2        53002    9.9.9.1         53002    DATA    IPV4    UDP_REL
Client = AR
TI   conn_id my_ip          my_port  peer_ip         peer_por intf    L3      L4
10   0       0.0.0.0        0        0.0.0.0         0        NONE_IN NONE_L3 NONE_L4
Client = CF
TI   conn_id my_ip          my_port  peer_ip         peer_por intf    L3      L4
11   0       9.9.9.2        59005    9.9.9.1         59005    DATA    IPV4    SCTP
```

Step 3 **show redundancy application protocol** {*protocol-id* | **group** [*group-id*]}

Example:

```
Router#show redundancy application protocol group

RG Protocol RG 1
------------------
Role: Standby
Negotiation: Enabled
Priority: 50
Protocol state: Standby-hot
Ctrl Intf(s) state: Up
Active Peer: address 1.1.1.2, priority 150, intf Gi0/0/0
Standby Peer: Local
Log counters:
role change to active: 0
role change to standby: 1
disable events: rg down state 1, rg shut 0
ctrl intf events: up 2, down 1, admin_down 1
reload events: local request 0, peer request 0

RG Media Context for RG 1
--------------------------
Ctx State: Standby
Protocol ID: 1
Media type: Default
Control Interface: GigabitEthernet0/0/0
Current Hello timer: 3000
Configured Hello timer: 3000, Hold timer: 10000
Peer Hello timer: 3000, Peer Hold timer: 10000
Stats:
Pkts 117, Bytes 7254, HA Seq 0, Seq Number 117, Pkt Loss 0
Authentication not configured
Authentication Failure: 0
Reload Peer: TX 0, RX 0
Resign: TX 0, RX 0
Active Peer: Present. Hold Timer: 10000
Pkts 115, Bytes 3910, HA Seq 0, Seq Number 1453975, Pkt Loss 0



RG Protocol RG 2
------------------
Role: Active
Negotiation: Enabled
Priority: 135
Protocol state: Active
Ctrl Intf(s) state: Up
```

```
Active Peer: Local
Standby Peer: address 1.1.1.2, priority 130, intf Gi0/0/0
Log counters:
role change to active: 1
role change to standby: 1
disable events: rg down state 1, rg shut 0
ctrl intf events: up 2, down 1, admin_down 1
reload events: local request 0, peer request 0

RG Media Context for RG 2
--------------------------
Ctx State: Active
Protocol ID: 2
Media type: Default
Control Interface: GigabitEthernet0/0/0
Current Hello timer: 3000
Configured Hello timer: 3000, Hold timer: 10000
Peer Hello timer: 3000, Peer Hold timer: 10000
Stats:
Pkts 118, Bytes 7316, HA Seq 0, Seq Number 118, Pkt Loss 0
Authentication not configured
Authentication Failure: 0
Reload Peer: TX 0, RX 0
Resign: TX 0, RX 1
Standby Peer: Present. Hold Timer: 10000
Pkts 102, Bytes 3468, HA Seq 0, Seq Number 1453977, Pkt Loss 0
```

The following example shows configuration details for the redundancy application protocol group 1:

```
Router#show redundancy application protocol group 1

RG Protocol RG 1
------------------
Role: Standby
Negotiation: Enabled
Priority: 50
Protocol state: Standby-hot
Ctrl Intf(s) state: Up
Active Peer: address 1.1.1.2, priority 150, intf Gi0/0/0
Standby Peer: Local
Log counters:
role change to active: 0
role change to standby: 1
disable events: rg down state 1, rg shut 0
ctrl intf events: up 2, down 1, admin_down 1
reload events: local request 0, peer request 0

RG Media Context for RG 1
--------------------------
Ctx State: Standby
Protocol ID: 1
Media type: Default
Control Interface: GigabitEthernet0/0/0
Current Hello timer: 3000
Configured Hello timer: 3000, Hold timer: 10000
Peer Hello timer: 3000, Peer Hold timer: 10000
Stats:
Pkts 120, Bytes 7440, HA Seq 0, Seq Number 120, Pkt Loss 0
Authentication not configured
Authentication Failure: 0
Reload Peer: TX 0, RX 0
Resign: TX 0, RX 0
Active Peer: Present. Hold Timer: 10000
```

```
Pkts 118, Bytes 4012, HA Seq 0, Seq Number 1453978, Pkt Loss 0
```

The following example shows configuration details for the redundancy application protocol group 2:

```
Router# show redundancy application protocol group 2

RG Protocol RG 2
------------------
Role: Active
Negotiation: Enabled
Priority: 135
Protocol state: Active
Ctrl Intf(s) state: Up
Active Peer: Local
Standby Peer: address 1.1.1.2, priority 130, intf Gi0/0/0
Log counters:
role change to active: 1
role change to standby: 1
disable events: rg down state 1, rg shut 0
ctrl intf events: up 2, down 1, admin_down 1
reload events: local request 0, peer request 0

RG Media Context for RG 2
--------------------------
Ctx State: Active
Protocol ID: 2
Media type: Default
Control Interface: GigabitEthernet0/0/0
Current Hello timer: 3000
Configured Hello timer: 3000, Hold timer: 10000
Peer Hello timer: 3000, Peer Hold timer: 10000
Stats:
Pkts 123, Bytes 7626, HA Seq 0, Seq Number 123, Pkt Loss 0
Authentication not configured
Authentication Failure: 0
Reload Peer: TX 0, RX 0
Resign: TX 0, RX 1
Standby Peer: Present. Hold Timer: 10000
Pkts 107, Bytes 3638, HA Seq 0, Seq Number 1453982, Pkt Loss 0
```

The following example shows configuration details for the redundancy application protocol 1:

```
Router#show redundancy application protocol 1

Protocol id: 1, name: rg-protocol-1
Hello timer in msecs: 3000
Hold timer in msecs: 10000
OVLD-1#show redundancy application protocol 2
Protocol id: 2, name: rg-protocol-2
Hello timer in msecs: 3000
Hold timer in msecs: 10000
```

Step 4 **show redundancy application faults group** [*group-id*]

Example:

```
Router#show redundancy application faults group

Faults states Group 1 info:
Runtime priority: [50]
RG Faults RG State: Up.
Total # of switchovers due to faults: 0
Total # of down/up state changes due to faults: 2
```

```
Faults states Group 2 info:
Runtime priority: [135]
RG Faults RG State: Up.
Total # of switchovers due to faults: 0
Total # of down/up state changes due to faults: 2
```

The following example shows configuration details specific to redundancy application faults group 1:

```
Router#show redundancy application faults group 1

Faults states Group 1 info:
Runtime priority: [50]
RG Faults RG State: Up.
Total # of switchovers due to faults: 0
Total # of down/up state changes due to faults: 2
```

The following example shows configuration details specific to redundancy application faults group 2:

```
Router#show redundancy application faults group 2
Faults states Group 2 info:
Runtime priority: [135]
RG Faults RG State: Up.
Total # of switchovers due to faults: 0
Total # of down/up state changes due to faults: 2
```

Step 5 **show redundancy application if-mgr group** [*group-id*]

Example:

```
Router#show redundancy application if-mgr group

RG ID: 1
 ==========

 interface      GigabitEthernet0/0/3.152
 ----------------------------------------
 VMAC           0007.b421.4e21
 VIP            55.1.1.255
 Shut           shut
 Decrement      10

 interface      GigabitEthernet0/0/2.152
 ----------------------------------------
 VMAC           0007.b421.5209
 VIP            45.1.1.255
 Shut           shut
 Decrement      10


 RG ID: 2
 ==========

 interface      GigabitEthernet0/0/3.166
 ----------------------------------------
 VMAC           0007.b422.14d6
 VIP            4.1.255.254
 Shut           no shut
 Decrement      10

 interface      GigabitEthernet0/0/2.166
 ----------------------------------------
 VMAC           0007.b422.0d06
 VIP            3.1.255.254
```

```
 Shut           no shut
 Decrement      10
```

The following examples shows configuration details for redundancy application interface manager group 1 and group 2:

```
Router#show redundancy application if-mgr group 1

 RG ID: 1
 ==========

 interface      GigabitEthernet0/0/3.152
 ----------------------------------------
 VMAC           0007.b421.4e21
 VIP            55.1.1.255
 Shut           shut
 Decrement      10

 interface      GigabitEthernet0/0/2.152
 ----------------------------------------
 VMAC           0007.b421.5209
 VIP            45.1.1.255
 Shut           shut
 Decrement      10

Router#show redundancy application if-mgr group 2

 RG ID: 2
 ==========

 interface      GigabitEthernet0/0/3.166
 ----------------------------------------
 VMAC           0007.b422.14d6
 VIP            4.1.255.254
 Shut           no shut
 Decrement      10

 interface      GigabitEthernet0/0/2.166
 ----------------------------------------
 VMAC           0007.b422.0d06
 VIP            3.1.255.254
 Shut           no shut
 Decrement      10
```

Step 6 **show redundancy application control-interface group** [*group-id*]

Example:

```
Router#show redundancy application control-interface group

The control interface for rg[1] is GigabitEthernet0/0/0
Interface is Control interface associated with the following protocols: 2 1
Interface Neighbors:
Peer: 1.1.1.2 Active RGs: 1 Standby RGs: 2

The control interface for rg[2] is GigabitEthernet0/0/0
Interface is Control interface associated with the following protocols: 2 1
Interface Neighbors:
Peer: 1.1.1.2 Active RGs: 1 Standby RGs: 2
```

The following example shows configuration details of the redundancy application control-interface group 1:

```
Router#show redundancy application control-interface group 1
```

```
The control interface for rg[1] is GigabitEthernet0/0/0
Interface is Control interface associated with the following protocols: 2 1
Interface Neighbors:
Peer: 1.1.1.2 Active RGs: 1 Standby RGs: 2
```

The following example shows configuration details of the redundancy application control-interface group 2:

```
Router#show redundancy application control-interface group 2

The control interface for rg[2] is GigabitEthernet0/0/0
Interface is Control interface associated with the following protocols: 2 1
Interface Neighbors:
Peer: 1.1.1.2 Active RGs: 1 Standby RGs: 2
```

Step 7 **show redundancy application data-interface group** [*group-id*]

Example:

```
Router#show redundancy application data-interface group

The data interface for rg[1] is GigabitEthernet0/0/1
The data interface for rg[2] is GigabitEthernet0/0/1
```

The following examples show configuration details specific to redundancy application data-interface group 1 and group 2:

```
Router#show redundancy application data-interface group 1
The data interface for rg[1] is GigabitEthernet0/0/1

Router#show redundancy application data-interface group 2
The data interface for rg[2] is GigabitEthernet0/0/1
```

Troubleshoot High Availability Issues

Use the following show and debug commands to troubleshoot any issues:

- **show redundancy application group all**
- **show redundancy application transport clients**
- **show redundancy client domain all | inc VOIP RG**
- **show voice high-availability summary**
- **show voip fpi stats**
- **debug voip rtp session**
- **debug voice high-availability all**
- **debug voip fpi all**
- **debug redundancey application group {config | faults | media | protocol | rii transport | vp}**

Note Do not turn on a large number of debugs on a system carrying high volume of active call traffic.