Segment Routing OSPFv2 Microloop Avoidance

The feature enables link-state routing protocols such as IS-IS and OSPF to prevent or avoid microloops during network convergence after a topology undergoes any change.

- Feature Information for Segment Routing OSPFv2 Microloop Avoidance, on page 1
- Information About Segment Routing OSPFv2 Microloop Avoidance, on page 2
- Prerequisites for Segment Routing OSPFv2 Microloop Avoidance, on page 5
- Restrictions for Segment Routing OSPFv2 Microloop Avoidance, on page 6
- Configuring Segment Routing OSPFv2 Microloop Avoidance, on page 6
- Verifying Segment Routing OSPFv2 Microloop Avoidance, on page 6

Feature Information for Segment Routing OSPFv2 Microloop Avoidance

The following table provides release information about the feature or features described in this module. This table lists only the software release that introduced support for a given feature in a given software release train. Unless noted otherwise, subsequent releases of that software release train also support that feature.

Use Cisco Feature Navigator to find information about platform support and Cisco software image support. To access Cisco Feature Navigator, go to https://cfnng.cisco.com/. An account on Cisco.com is not required.

Table 1: Feature Information for Segment Routing OSPFv2 Microloop Avoidance

Feature Name	Releases	Feature Information
Segment Routing OSPFv2 Microloop Avoidance	Cisco IOS XE Amsterdam 17.3.2	The Segment Routing microloop avoidance feature enables link-state routing protocols such as IS-IS and OSPF to prevent or avoid microloops during network convergence after a topology change. The following commands was introduced/modified by this feature: **microloop avoidance segment-routing**.

Information About Segment Routing OSPFv2 Microloop Avoidance

Microloops are brief packet loops that occur in the network following a topology change (link down, link up, or metric change events). Microloops are caused by the non-simultaneous convergence of different nodes in the network. If nodes converge and send traffic to a neighbor node that has not converged, traffic may be looped between these two nodes, resulting in packet loss, jitter, and out-of-order packets.

If segment routing microloop avoidance feature detects a topology change, it creates a loop-free path to the destination using a list of segments.

Microloops

When changes occur in a network topology because of the failure or restoration of a link or a network device, IP Fast Reroute enables rapid network convergence by moving traffic to precomputed backup paths until regular convergence mechanisms move traffic to a newly computed best path, which is also known as a post-convergence path. This network convergence may cause short microloops between two directly or indirectly connected devices in the topology. Microloops are caused when different nodes in the network calculate alternate paths at different times and independently of each other. For instance, if a node converges and sends traffic to a neighbor node, which has not converged yet, traffic may loop between the two nodes.

Microloops may or may not result in traffic loss. If the duration of a microloop is short, that is the network converges quickly, packets may loop for a short duration before their time-to-live (TTL) expires. Eventually, the packets will get forwarded to the destination. If the duration of the microloop is long, that is one of the routers in the network is slow to converge, packets may expire their TTL or the packet rate may exceed the bandwidth, or the packets might be out of order, and packets may dropped.

Microloops that are formed between a failed device and its neighbors are called local uloops, whereas microloops that are formed between devices that are multiple hops away are called remote uloops. Local uloops are usually seen in networks where local loop-free alternate (LFA) path is not available. In such networks, remote LFAs provide backup paths for the network.

The information discussed above can be illustrated with the help of an example topology.

Figure 1: Microloop Example Topology

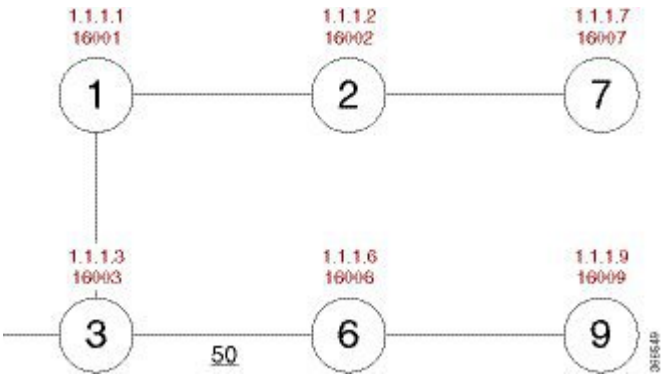

The assumptions in this example are as follows:

- The default metrics is 10 for each link except for the link between Node 3 and Node 6, which has a metric of 50. The order of convergence with SPF backoff delays on each node is as follows:
  - Node 3—50 milliseconds
  - Node 1—500 milliseconds
  - Node 2—1 second
  - Node 7—1.5 seconds

A packet sent from Node 3 to Node 9, the destination, traverses via Node 6.

If a link is established between Node 6 and Node 7, the shortest path for a packet from Node 3 to Node 9 would be Node 1, Node 2, Node 7, and Node 6 before the packet reaches the destination, Node 9.

Figure 2: Microloop Example Topology—Shortest Path

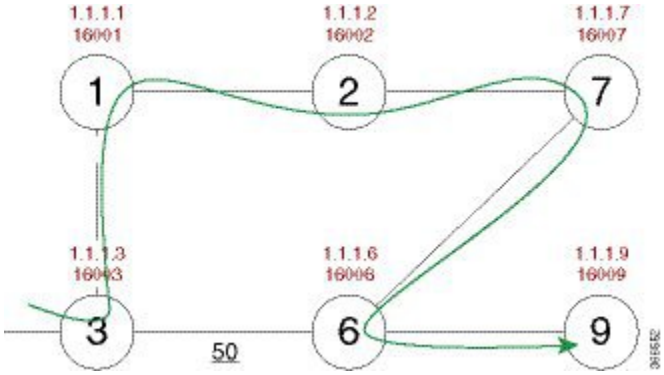

The following figure shows the Forwarding Information Base (FIB) table in each node before the link between Node 6 and Node 7 is established. The FIB entry contains the prefix of the destination node (Node 9) and the next hop.

Figure 3: Microloop Example Topology—FIB Entry

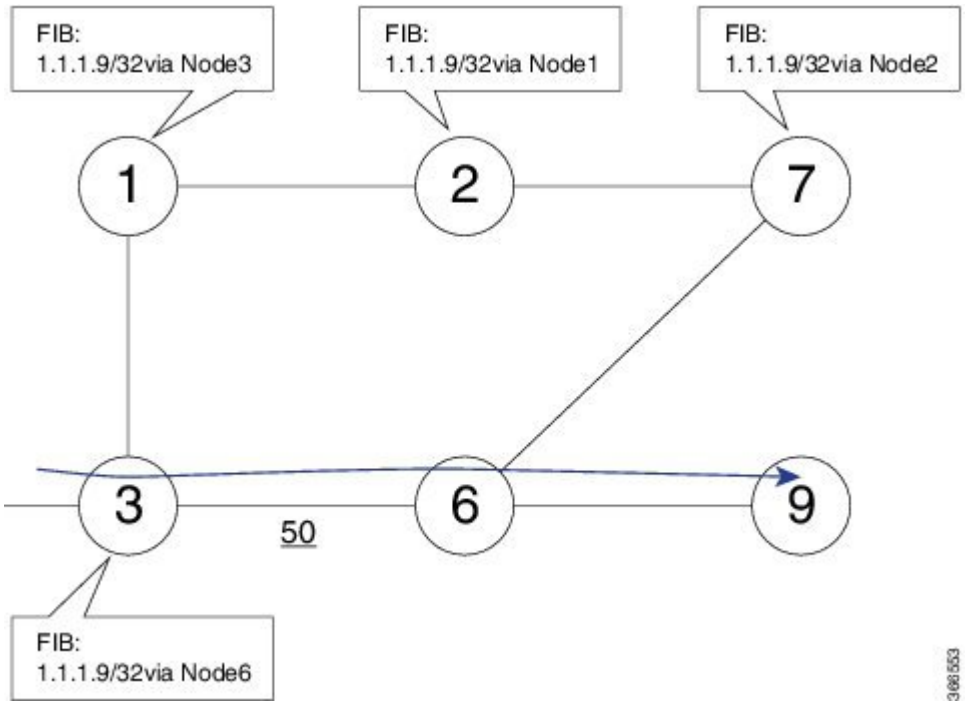

When the link between Node 6 and Node 7 comes up, microloops occur for the links based on the order of convergence of each node. In this example, Node 3 converges first with Node 1 resulting in a microloop between Node 3 and Node 1. Then, Node 1 converges next resulting in a microloop between Node 1 and Node 2. Next, Node 2 converges next resulting in a microloop between Node 2 and Node 7. Finally, Node 7 converges resolving the microloop and the packet reaches the destination Node 9, as shown in the following figure.

Figure 4: Microloop Example Topology—Microloops

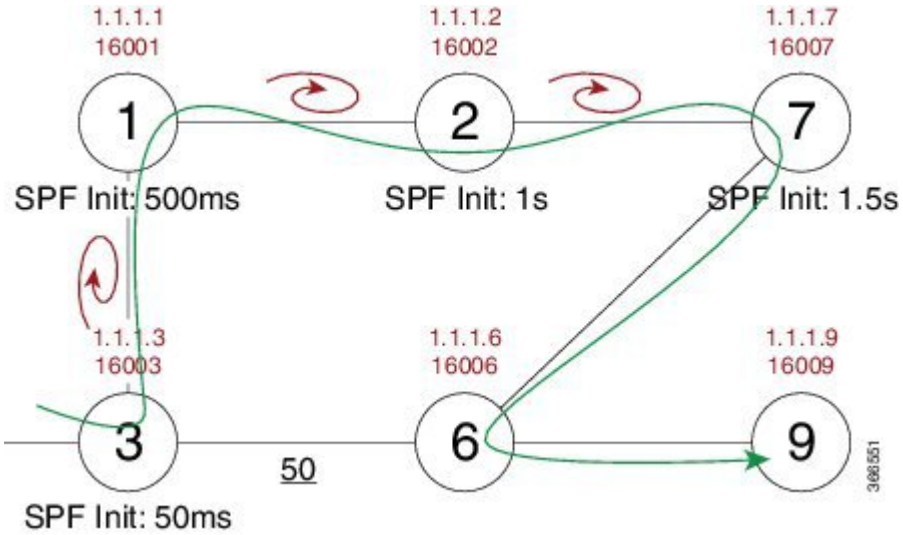

Adding the SPF convergence delay, microloop results in a loss of connectivity for 1.5 seconds, which is the convergence duration specified for node 7.

Preventing Microloops using Segment Routing

This section explains how segment routing prevents microloops using an example. Node 3 in the example is enabled with the **microloop avoidance segment-routing** command.

Figure 5: Microloop Example Topology—Segment Routing

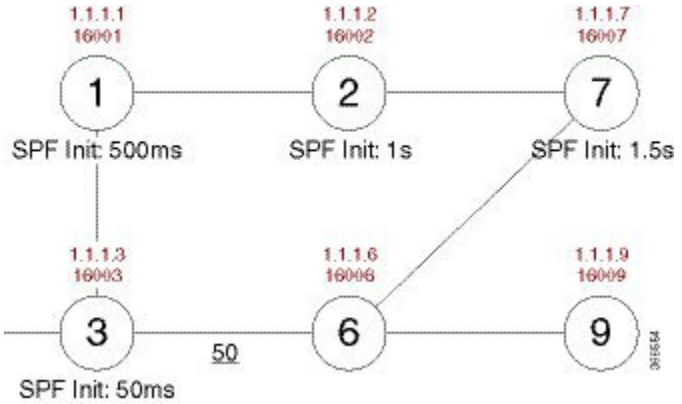

Instead of updating the FIB table, Node 3 builds a dynamic loop-free path to the destination (Node 9) using a list of segments IDs, which include the prefix segment ID (SID) of Node 7, which is 16007, and the adjacency segment ID (SID) of Node 6, which is 24076.

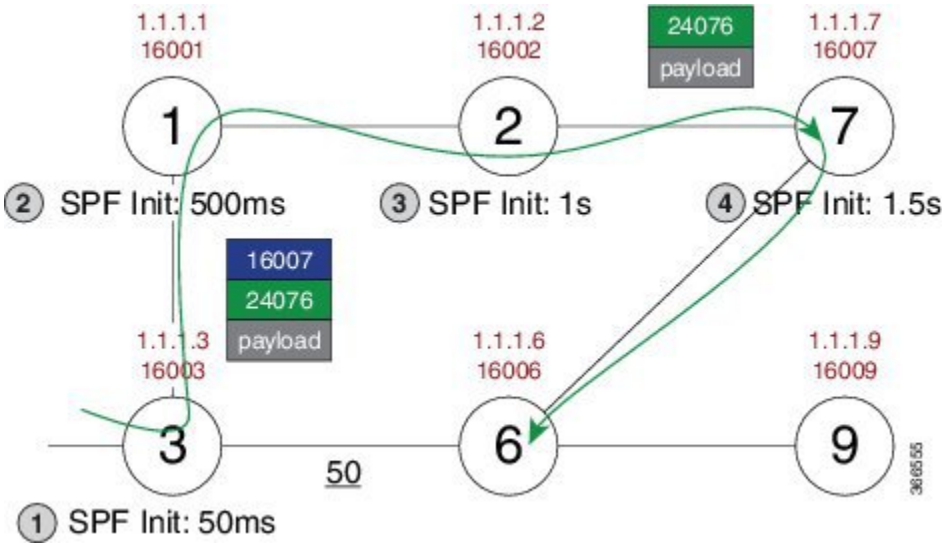

So the packet from Node 3 reaches its destination Node 9 without the risk of microloop until the network converges. Finally, Node 3 updates the FIB with the new path.

Prerequisites for Segment Routing OSPFv2 Microloop Avoidance

Before configuring SR microloop avoidance, ensure that the segment routing is globally configured in the OSPF router mode.

```
router ospf process
segment-routing mpls
```

Restrictions for Segment Routing OSPFv2 Microloop Avoidance

- Segment Routing OSPFv2 microloop avoidance does not support Multi Topology Routing (MTR). It supports only MTID 0.
- A list of segment IDs along the post convergence path is used only if the nodes in the the list are SR capable and have atleast one node SID. Otherwise, OSPF installs the post convergence path immediately.
- SR microloop avoidance is used for link up, link down, and link metric change events of point-to-point interfaces and broadcast interfaces with two neighbors only.
- SR microloop avoidance can be used only for one topology change. When multiple topology changes occur, OSPF installs the post convergence path immediately.

Configuring Segment Routing OSPFv2 Microloop Avoidance

Enables segment routing microloop avoidance for all the prefixes.

```
router ospf
 microloop avoidance segment-routing
 microloop avoidance rib-update-delay delay-time
```

The **microloop avoidance rib-update-delay** *delay-time* command is used to configure the delay in milliseconds for a node to wait before updating the node's forwarding table and stops using the microloop avoidance. The default value for the RIB delay is 5000 milliseconds.

Verifying Segment Routing OSPFv2 Microloop Avoidance

Use the **show ip ospf segment-routing microloop avoidance** command to check if SR microloop avoidance is enabled or not.