GPS Field Replaceable Unit Module

This chapter contains the following sections:

- Overview of the GPS FRU Module, on page 1
- Installation and Removal of a GPS FRU Module, on page 2

Overview of the GPS FRU Module

The IR1833 and IR1835 have a slot for a dedicated GPS field-replaceable unit (FRU) module, which will be used in addition to the one integrated in the LTE module, for more accurate dead reckoning performance. The part number is IRM-GNSS-ADR.

The following figure shows a GPS FRU module.

Figure 1: GPS FRU Module

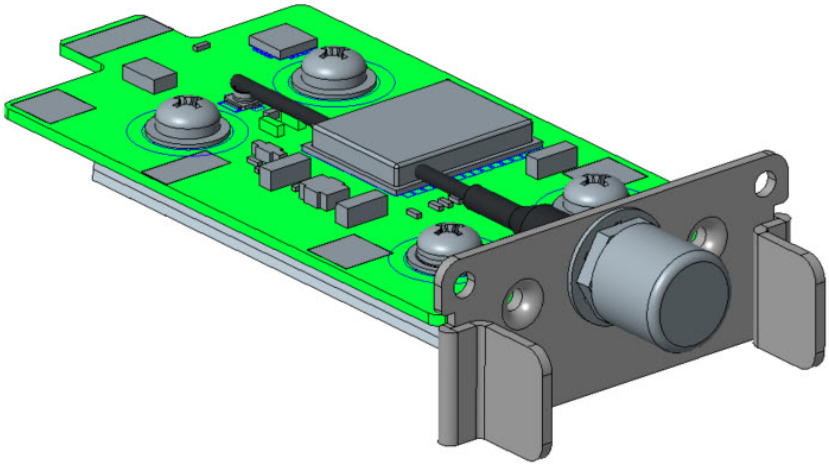

The IRM-GNSS-ADR hardware is capable of supporting various GNSS constellations. Cisco supports GPS only on this module with IOS XE release 17.7.1. Please inquire with your sales representative for a roadmap of support of additional constellations on the IRM-GNSS-ADR module.

Further details on the GPS capabilities can be found in the Cisco Catalyst IR1800 Rugged Series Router Software Configuration Guide.

Installation and Removal of a GPS FRU Module

Caution The module is a FRU, but is not hot swappable. Make sure the device is powered down before replacing.

Procedure

Step 1 Remove the protective cover over the GPS slot by removing the two screws (**1**) using a Phillips driver, as shown in the following figure. Retain these two screws for further use.

Figure 2: GPS Slot Cover

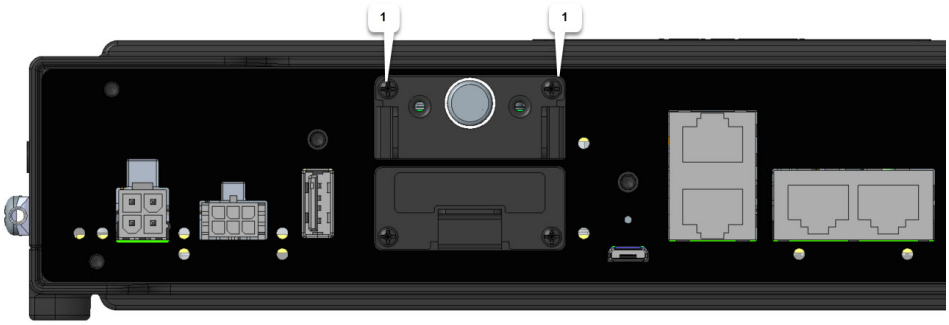

1	Screws

Step 2 Insert the GPS FRU module into the slot in the device.

Figure 3: GPS Module Insertion

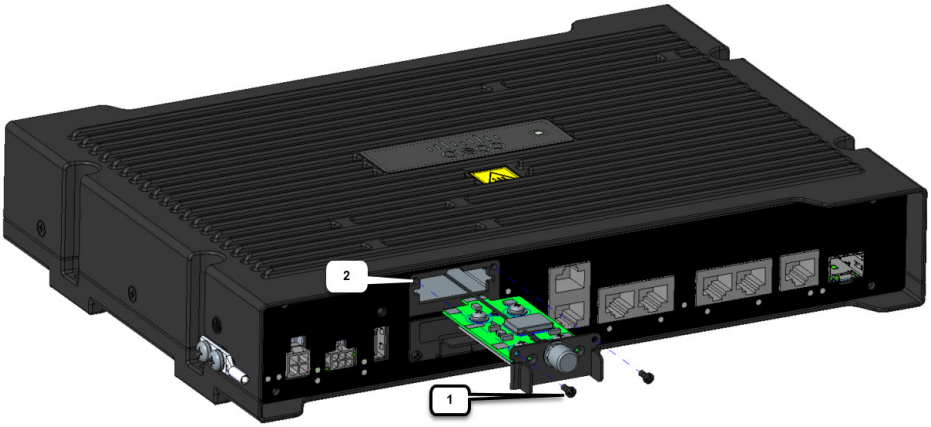

1	Screws
2	Screw holes

Step 3 Align the previously removed screws (**1**), with the screw holes (**2**), and tighten to 2-3 in-lb (0.2-0.3 Newton meter).

Step 4 The installation is now complete.

Step 5 To remove the module, reverse the steps:

a. Power off the device.

b. Remove the screws.

c. Pull out the module.