Spec Sheet

Cisco R42610 Rack

CISCO SYSTEMS
170 WEST TASMAN DR.
SAN JOSE, CA, 95134
WWW.CISCO.COM

PUBLICATION HISTORY

REV A.6 DECEMBER 9, 2014

Overview 3
Rack Certifications and Recommendations 4
UCS Third-Party Rack Certification 4
UCS-Recommended Racks 4
Detailed Views 5
Front and Rear Views 5
Joined Racks 6
Stabilized Rack 7
Chassis Mounted in Rack 8
Product Ordering and Shipping 9
Mounting PDUs 12
Type 1: Blade Server Optimized PDU 12
Type 2: Rack-Mount Server Optimized PDU 15
Tested Products 18
Rack Planning 18
Available Services 18
Supplemental Material 19
Technical Specifications 19

Overview

Cisco R Series Racks are an ideal solution for mission-critical environments, which require the highest levels of reliability, structural integrity, and security. The modern design delivers exceptional power, cooling, and cable management features as well as the strength and stability required in today's rack enclosures, offering peace of mind for the most important infrastructure elements. The Cisco R Series Racks (shown in *Figure 1*) are certified for use with the Cisco Unified Computing System and allow Cisco to offer a complete infrastructure solution, including computing, networking, rack, power, and services.

Figure 1 Cisco R42610 Rack

Rack Certifications and Recommendations

UCS Third-Party Rack Certification

UCS is designed for industry standard (EIA-310-D) 19-inch server racks that meet minimum rack requirements as specified in each component's installation guide. Cisco has no plans to certify 3rd party racks for UCS.

UCS-Recommended Racks

The Cisco R42610 Rack is an industry standard (EIA-310-D), 19-inch rack that has been tested with Cisco UCS and select Nexus products. Cisco R42610 Standard & Expansion racks are ideal for single-rack and multiple-rack UCS installations at customer sites. Cisco R42610 Dynamic racks & supplemental UCS integration hardware from Avnet are required for shipping pre-racked UCS.

Detailed Views

This section shows detailed views of the rack, rack configurations, and rack components.

Front and Rear Views

Figure 2 shows the front and rear views of the rack. Note that there are two small rear doors for improved rear access clearance.

Figure 2 Cisco R42610 Rack Front and Rear Views

Front View **Rear View**

Joined Racks

Figure 3 shows how two racks are joined using the rack joining kit. Both the front and rear of the racks are joined using the joining kit (two brackets in the front and two in the rear).

Figure 3 Cisco R42610 Joined Racks

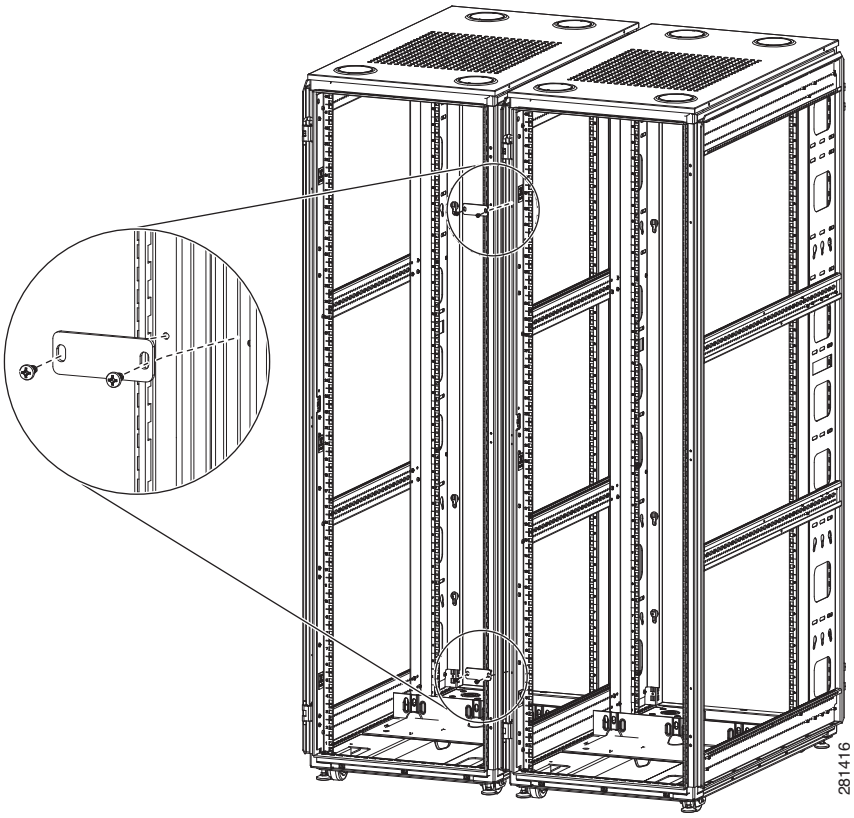

Stabilized Rack

Figure 4 shows how a rack is stabilized by anchoring it to the floor using the rack stabilizer kit.

Figure 4 Stabilized Cisco R42610 Rack

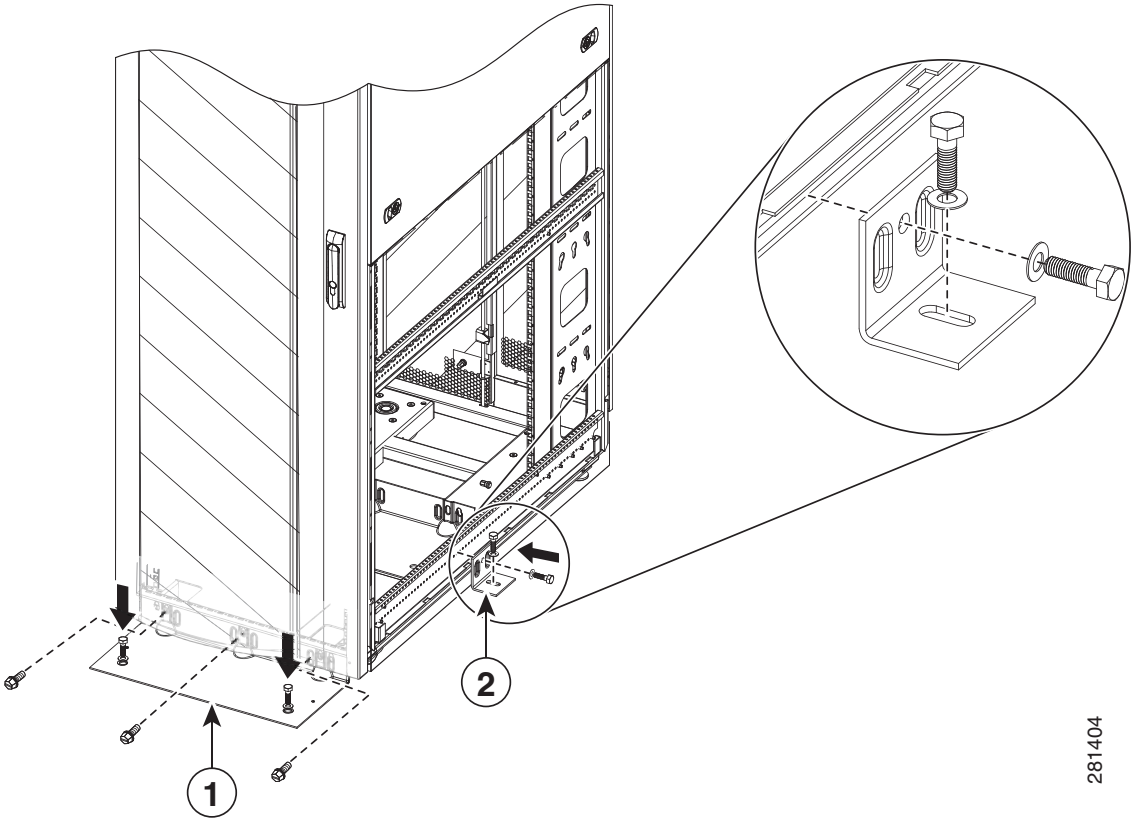

Chassis Mounted in Rack

Figure 5 shows a chassis being mounted in the rack using mounting rails, cage nuts, and mounting screws.

Figure 5 Chassis Installed in Cisco R42610 Rack

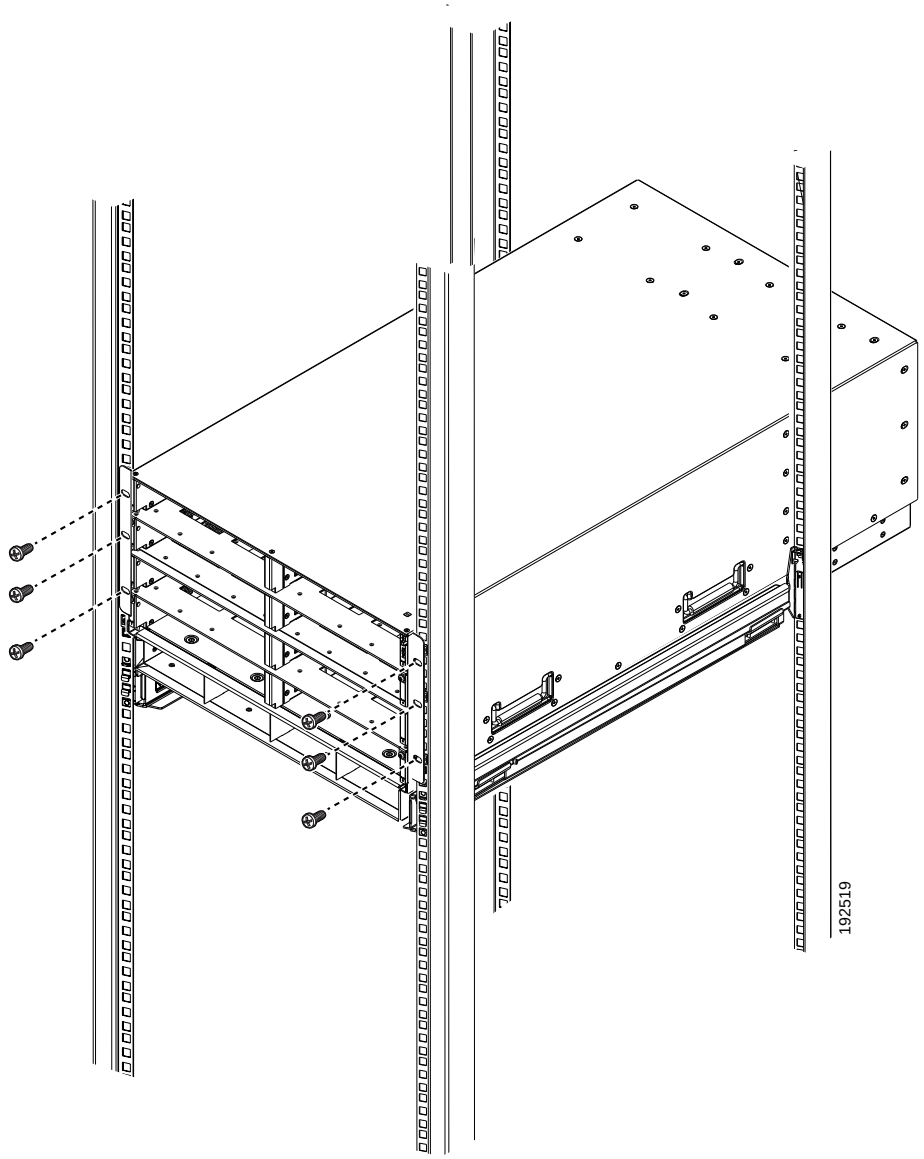

Product Ordering and Shipping

Cisco racks are currently shipping to:

- North America
- South America
- EMEAR

To order an R42610 rack:

(1) Use *Table 1* to select appropriate Cisco rack for UCS installation at customer sites

Table 1 Available Racks

Product ID (PID)	Description
RACK-UCS	Cisco R42610 expansion rack, no side panels. This type of rack is used for multiple-rack deployments.
RACK-UCS2	Cisco R42610 standard rack, with side panels. This type of rack is used for single-rack and end of row deployments. Side panels are needed for racks at the ends of multiple-rack deployments. For example, when configuring a row of 5 racks, order 1 standard rack plus 4 expansion racks. Apply the side panels from the standard rack to racks at each end of the row.
RACK-UCS2-INT	Cisco R42610 dynamic rack, with side panels and shock pallet. This type of rack and supplemental UCS integration hardware are required for shipping pre-racked UCS systems.

(2) Use *Table 2* to select Cisco rack options

The following accessories ship with the Cisco R42610 rack:

- 50 M6 cage nuts
- 50 M6 mounting screws
- 2 M6 socket head screws
- 1 cage nut insertion tool
- 1 rack stabilizer
- 1 4-mm Allen key
- 20 Velcro cable management straps

Keep this in mind when ordering optional items from *Table 2*.

Table 2 Available Rack Options

Product ID (PID)	Description
RACK-BLANK-001	Blanking panels (qty 12), 1U, plastic, toolless. Recommended to ensure proper airflow. Fill all empty RU spaces in the front of the rack. Because each blanking panel PID includes 12 panels, use the following calculation: 42RU - occupied RU = available RU. Divide available RU by 12 to determine PID order quantity.
RACK-CBLMGT-001	Cable mgt D rings (qty 10), metal. Use the D rings to bundle system cables to ensure proper airflow.
RACK-CBLMGT-003	Brush strip (qty 1), 1 U. The brush strip promotes proper airflow while allowing cables to be passed from the front to the rear of the rack.
RACK-CBLMGT-011	Cable mgt straps (qty 10), Velcro. Use the Velcro straps to bundle system cables to ensure proper airflow.
RACK-FASTEN-001	Mounting screws (qty 100), M6. The rack ships with nuts and screws, but extras may be ordered.
RACK-FASTEN-002	Cage nuts (qty 50), M6. The rack ships with nuts and screws, but extras may be ordered.
RACK-JOIN-001	Rack joining kit. Use the kit to connect adjacent racks within a row. Order 1 unit less than the number of racks in the row.
RACK-STABLE-001	Rack stabilizer kit. The rack ships with a rack stabilizer, but if you want to bolt down the rear of the rack as well as the front, order this option.

(3) Use *Table 3* to select Cisco power distribution units (PDUs).

The Cisco RP Series PDUs are recommended for Cisco UCS and the Cisco R42610 Rack.

Table 3 Available PDUs

Product ID (PID)	Description
Europe and Rest of World (ROW) PIDs	
RP230-32-1P-U-1	Cisco RP230-32-U-1 Single Phase PDU 2x C13, 4x C19
RP230-32-1P-U-2	Cisco RP230-32-U-2 Single Phase PDU 20x C13, 4x C19
USA PIDs	
RP208-30-1P-U-1	Cisco RP208-30-U-1 Single Phase PDU 2x C13, 4x C19
RP208-30-1P-U-2	Cisco RP208-30-U-2 Single Phase PDU 20x C13, 4x C19

Mounting PDUs

There are currently two types of Cisco branded PDUs:

- Type 1: Blade Server Optimized PDU
- Type 2: Rack-Mount Server Optimized PDU

Type 1: Blade Server Optimized PDU

Blade server optimized PDUs are shown in *Table 4*.

Table 4 Blade Server Optimized PDUs

Product ID (PID)	Description
RP208-30-1P-U-1	Cisco RP208-30-U-1 Single Phase PDU 2x C13, 4x C19
RP230-32-1P-U-1	Cisco RP230-32-U-1 Single Phase PDU 2x C13, 4x C19

Cisco blade server optimized PDUs have 4 x IEC C19 receptacles and 2 x C13 receptacles. The PDU receptacle configuration has been optimized for use with the UCS 5108 chassis and Fabric Interconnects. The 4x C19 receptacles can be used to power the UCS 5108 chassis and the 2x C13 receptacles are available to power the Fabric Interconnects. A pair of Type 1 PDUs can support either 1 or 2 chassis depending upon the type of blades that are installed and the configuration of the blades

The Type 1 receptacle configuration is shown in *Figure 6*.

Figure 6 Type 1 PDU Front Panel

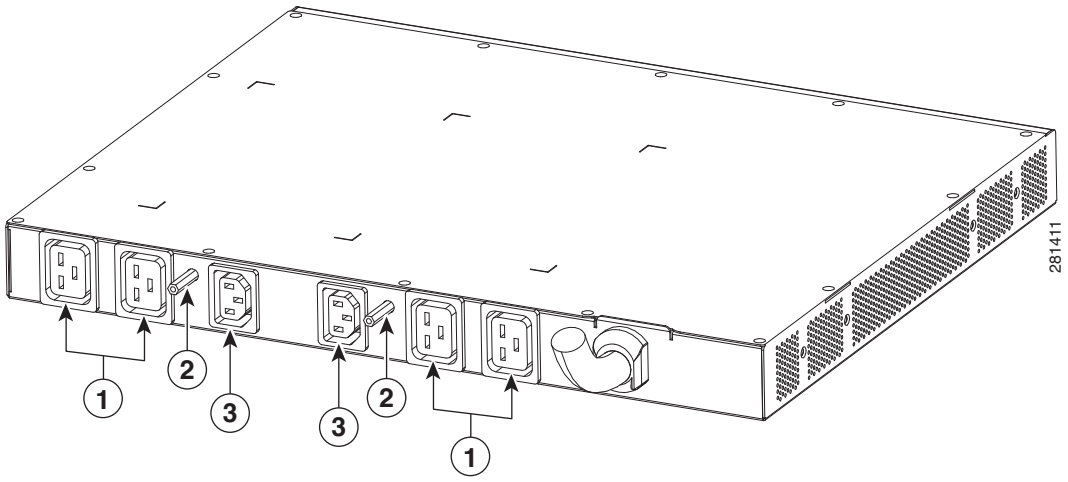

1	C19 receptacle (4)	3	C13 receptacles (2)
2	Breaker reset (2)	—	

Type 1 PDUs can be mounted either in the 19-inch rack space taking up 1U of space per PDU, or in the sides of the rack, taking up 0U of space.

Using the 1U mounting scheme allows 6 PDUs and up to 6 chassis to be installed but does not leave any space in the rack for the Fabric Interconnects.

The 1U PDU rack space mounting scheme is shown in *Figure 7*.

Figure 7 Mounting a Cisco 1-RU PDU in the Rack Space

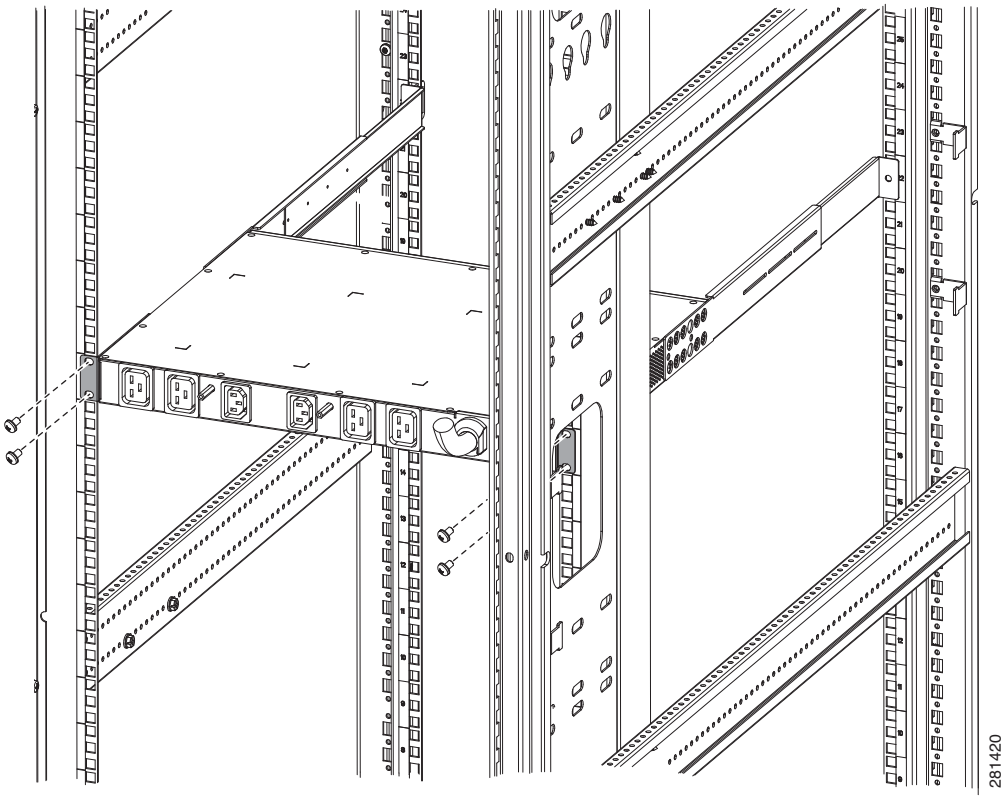

Mounting in the side panel space allows up to 6 PDUs to be installed while still providing rack space for up to 6 chassis and a pair of Fabric Interconnects (see *Figure 8*).

Figure 8 Mounting a Cisco 1-RU PDU on the Side of the Rack

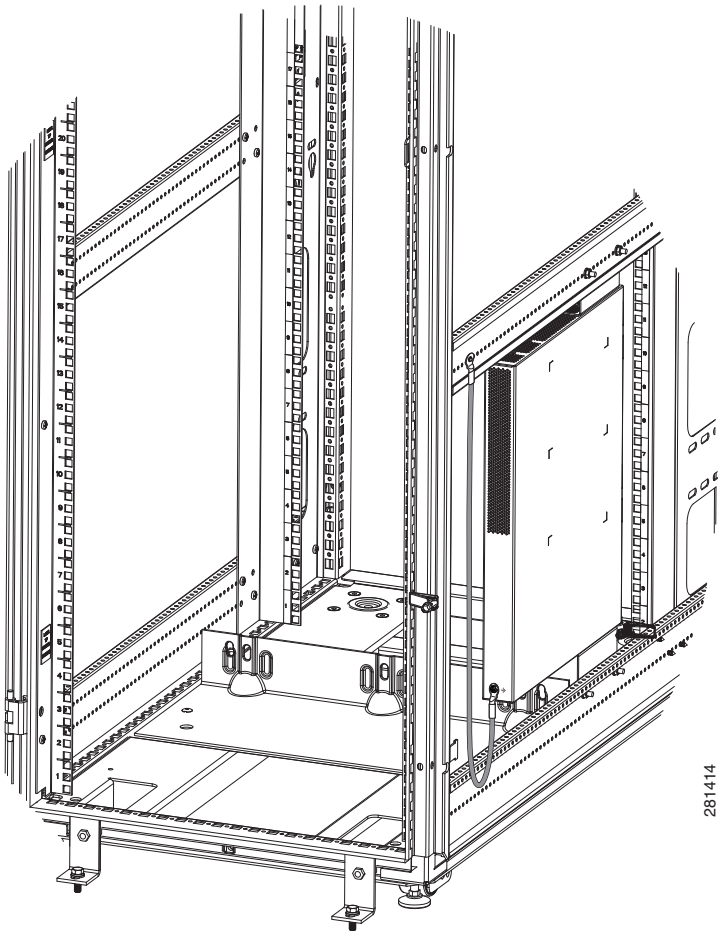

Type 2: Rack-Mount Server Optimized PDU

Rack-mount server optimized PDUs are shown in *Table 5*.

Table 5 Rack-Mount Server Optimized PDUs

Product ID (PID)	Description
RP208-30-1P-U-2	Cisco RP208-30-U-2 Single Phase PDU 20x C13, 4x C19
RP230-32-1P-U-2	Cisco RP230-32-U-2 Single Phase PDU 20x C13, 4x C19

The UCS Type 2 PDU has 4x IEC C19 receptacles and 20x C13 receptacles. The PDU receptacle configuration has been optimized for configurations that require a large number C13 terminated power cords, for example rack mount servers.

The Type 2 receptacle configuration is shown in *Figure 9*.

Figure 9 Type 2 PDU Front Panel

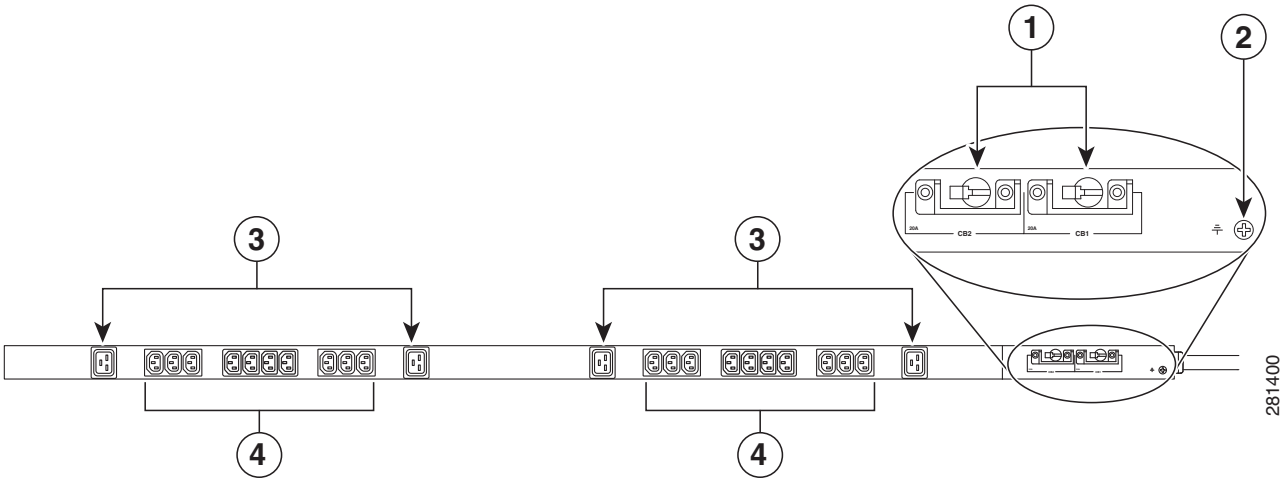

1	Breakers	3	C19 receptacle (4)
2	Grounding point	4	C13 receptacles (20)

The PDUs mount in the rear of the rack in two different ways. The first way, shown in *Figure 10*, is in the PDU tray with the receptacles facing sideways into the rack.

Figure 10 Mounting Cisco Zero-RU PDUs

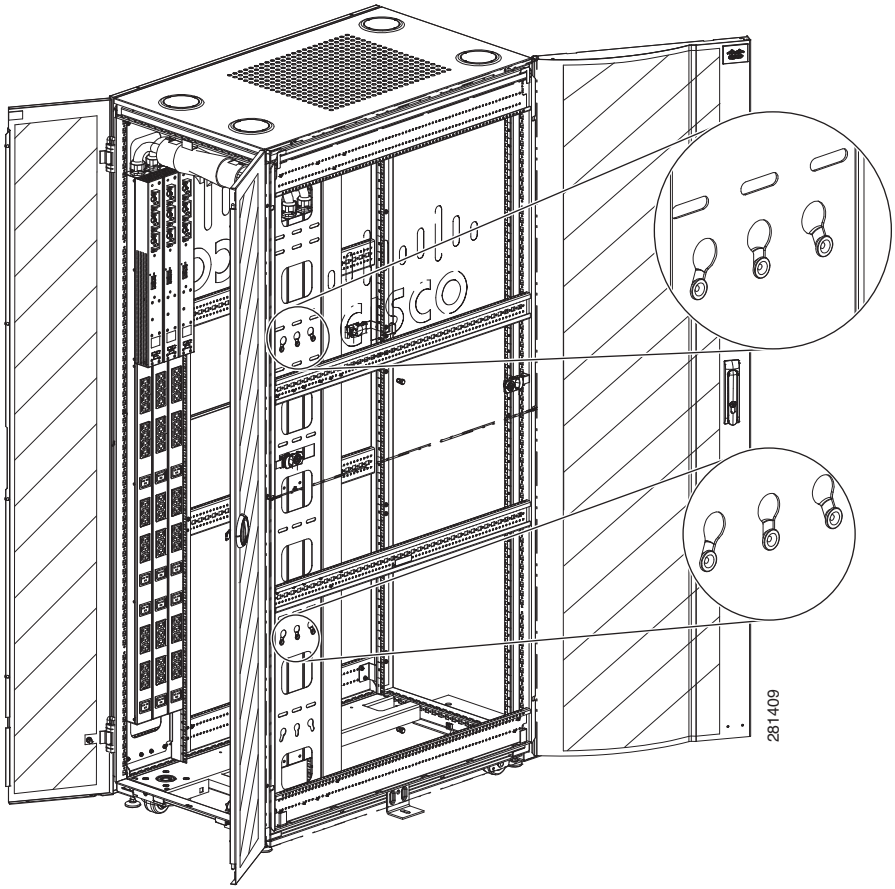

Although there are mounting holes that support up to 6 PDUs, three on each side in the rear of the Cisco R4210 rack, the number of PDUs that can physically be installed will be defined by the depth of the equipment that is installed in the rack. For example, if a customer wishes to use a Type 2 PDU to power both the UCS chassis and other equipment such as storage in the rack then you will be unable to mount 6 PDUs in the rack because the chassis will prevent the PDU mounting position closest to the front of the rack from being used.

For equipment that is extremely deep, an alternative mounting position has been provided that rotates the PDU by 90 degrees so that the receptacles face towards the rear of the rack. Up to 2 PDUs can be mounted in this fashion (see *Figure 11*).

Figure 11 Alternate 90-Degree Mounting Position

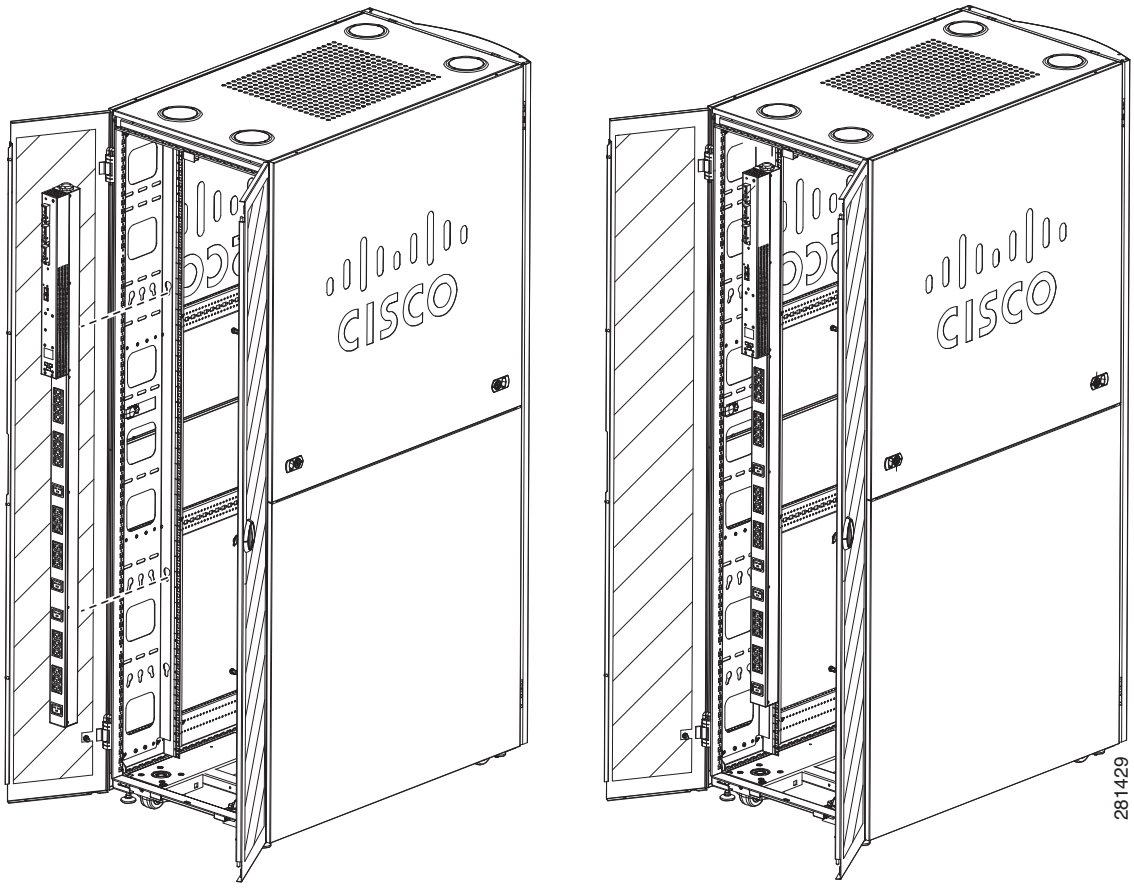

For further PDU installation instructions, go to this link:

http://www.cisco.com/en/US/docs/unified_computing/ucs/hw/rack_power/installation/guide/power.html

Tested Products

The Cisco R42610 Rack is an industry standard (EIA-310-D), 19-inch rack. In order to determine if a particular Cisco product or a third-party product works with the rack, please refer to the Cisco or third-party product documentation to determine whether the Cisco R42610 Rack meets minimum rack requirements for the product.

Rack Planning

Refer to the following documents:

Cisco R Series Rack and RP Series PDU Installation Guide:
http://www.cisco.com/en/US/products/ps11518/prod_installation_guides_list.html

Data Center Power and Cooling White Paper:
http://www.cisco.com/en/US/solutions/collateral/ns340/ns517/ns224/ns944/white_paper_c11-680202.pdf

Available Services

The Cisco R42610 Racks are backed by a warranty that includes three-year parts coverage and next business day (NBD) onsite parts replacement eight hours a day, five days a week. Expanding on the Cisco Unified Computing System warranty, the award-winning Cisco SMARTnet® Service helps you increase uptime, quickly resolve issues, and get the most from your unified computing investment. Cisco SMARTnet Service for Cisco R42610 Racks includes:

- Direct access to the Cisco Technical Assistance Center (TAC), staffed by Cisco professionals certified in a broad range of Cisco technologies. The TAC service request system automatically routes your request to a team of Cisco UCS specialists and escalates your case to the next level of support if it is not resolved within a specified time frame. You also can choose to interact with Cisco TAC engineers by email, telephone, web-based collaboration, and face- to-face using Cisco WebEx® collaboration.
- 8x5xNBD Onsite support options

Available SMARTnet for UCS Services for Cisco R42610 Racks:

RACK-UCS2:

- UCSD5 (UCSD5 CON-UCSD5-R42610)
- UCWD5 (UCWD5 CON-UCWD5-R42610)
- UCW5 (UCW5 CON-UCW5-R42610)
- CS (CON-OS-R42610)

RACK-UCS:

- UCSD5 (UCSD5 CON-UCSD5-R42610)
- UCWD5 (UCWD5 CON-UCWD5-R42610)
- UCW5 (UCW5 CON-UCW5-R42610)
- CS (CON-OS-R42610)

Supplemental Material

For additional information, see the following documents:

Cisco R Series Rack and RP Series PDU Installation Guide:
http://www.cisco.com/en/US/products/ps11518/prod_installation_guides_list.html

Data Center Power and Cooling White Paper:
http://www.cisco.com/en/US/solutions/collateral/ns340/ns517/ns224/ns944/white_paper_c11-680202.pdf

Technical Specifications

For technical specifications, see:

http://www.cisco.com/en/US/prod/collateral/ps10265/ps11518/data_sheet_c78-638922.html

Americas Headquarters
Cisco Systems, Inc.
San Jose, CA

Asia Pacific Headquarters
Cisco Systems (USA) Pte. Ltd.
Singapore

Europe Headquarters
Cisco Systems International BV Amsterdam,
The Netherlands

Cisco has more than 200 offices worldwide. Addresses, phone numbers, and fax numbers are listed on the Cisco Website at **www.cisco.com/go/offices.**

Cisco and the Cisco Logo are trademarks of Cisco Systems, Inc. and/or its affiliates in the U.S. and other countries. A listing of Cisco's trademarks can be found at www.cisco.com/go/trademarks. Third party trademarks mentioned are the property of their respective owners. The use of the word partner does not imply a partnership relationship between Cisco and any other company. (1005R)