IP+ATM in Mobile Wireless Networks

Cisco solutions for mobile wireless evolution

© 2001, Cisco Systems, Inc.

Agenda

- **ATM Benefits**

© 2001, Cisco Systems, Inc.

Benefits of ATM for transport

- Reduces cost by transmitting voice and/or data more efficiently over a single line
- Handles delay-sensitive and non-delay sensitive traffic by priority
- Provides additional bandwidth savings through compression and dynamic bandwidth allocation
- Scales easily from low to high speeds
- Can be IP enabled to add data services

© 2001, Cisco Systems, Inc.

Multi-Service ATM WAN

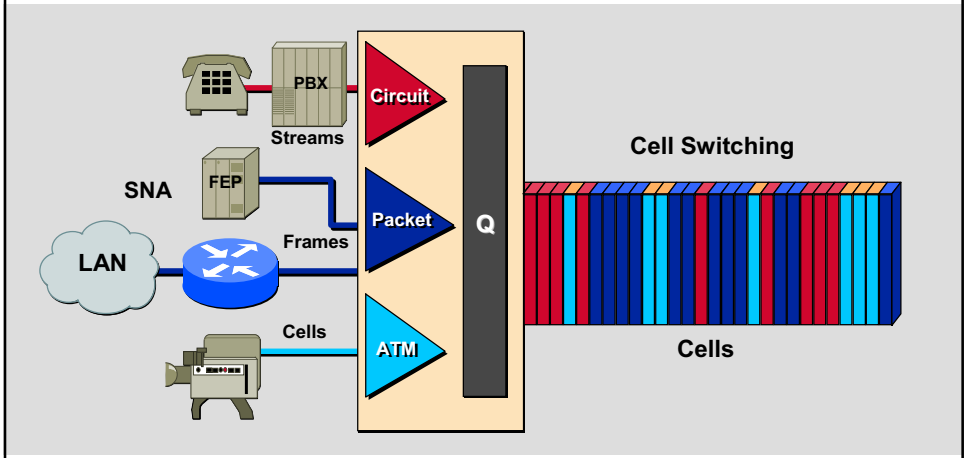

© 2001, Cisco Systems, Inc.

Reduce WAN Bandwidth Cost

ATM vs. TDM

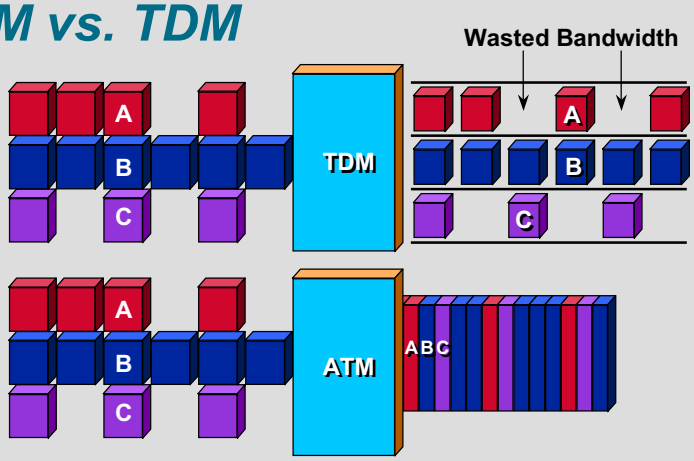

Cost Reduction 30-50%

- TDM requires the allocation of the maximum bandwidth needed, even when not used.
- ATM dynamically allocate bandwidth when need to send information

Before: TDM Bandwidth Allocation

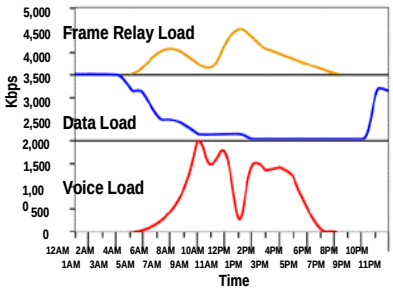

After: ATM Bandwidth Allocation

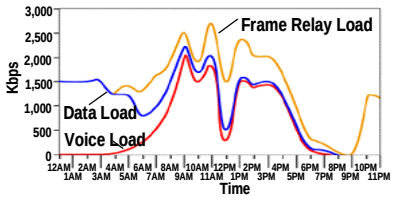

ATM provides Quality of Service

- Small cell size facilitates fast transmission
- QoS buffers
- Per VC queuing and rate scheduling
- Congestion management

© 2001, Cisco Systems, Inc.

TDM is cost prohibitive for data applications

- 3G services require a 70% increase in base stations
- Monthly leased line costs for T1/E1 – T3/E3 become prohibitive to expansion
- TMSC trunking becomes too complex and costly
- ATM aggregation reduces leased line costs and scales well with increased bandwidth

© 2001, Cisco Systems, Inc.

Where does ATM fit in Mobile networks?

- RAN - transport
- Core - transport

Access and backbone

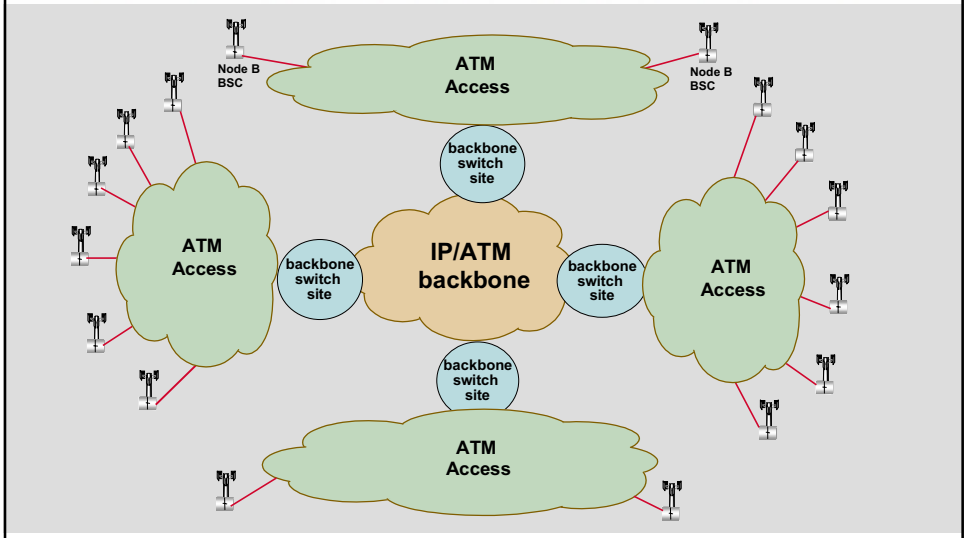

Access

- Provides connection between base stations and RNC
- Most transmission costs are in access

© 2001, Cisco Systems, Inc.

ATM backbone

- backbone connects access sites
- backbone must support future migration of existing networks

2G and 3G Traffic Type		2G and 3G Interface		2G and 3G Capabilty
2G	3G	2G	3G	
IDM	AAL5/ATM	T1/E1	OC-3/ STM-1	ATM-IMA
Speech		T1/T3	OC-12/ STM-4	ATM RT-VBR, VBR
FR/Data		FR	OC-48/ STM-16	ATM S PVC/SVC
		STM-1	Ethernet	Voice Trunking over ATM
		ISP and Corporate		IP QoS - Diffserv
		Ip Interface		IP Signaling
				IP MPLS
				IP IP VPN services

© 2001, Cisco Systems, Inc.

Mobile Data Technologies

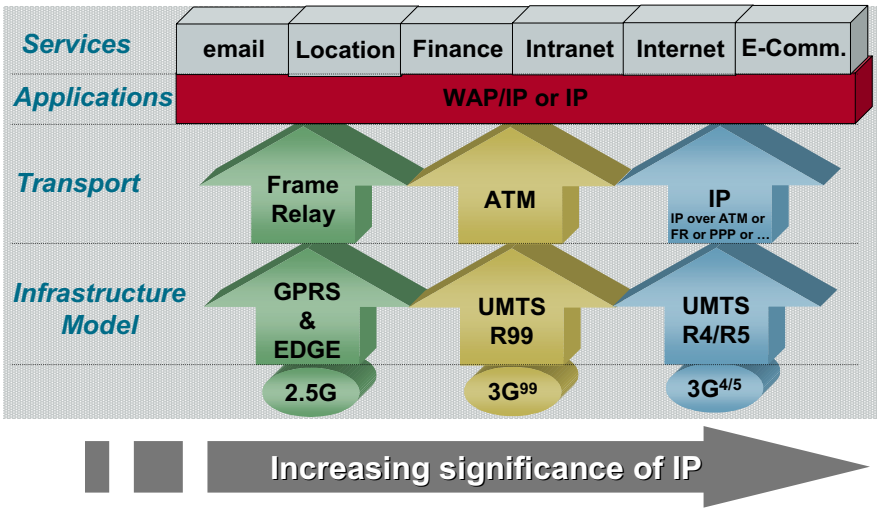

Mobile Architecture Evolution

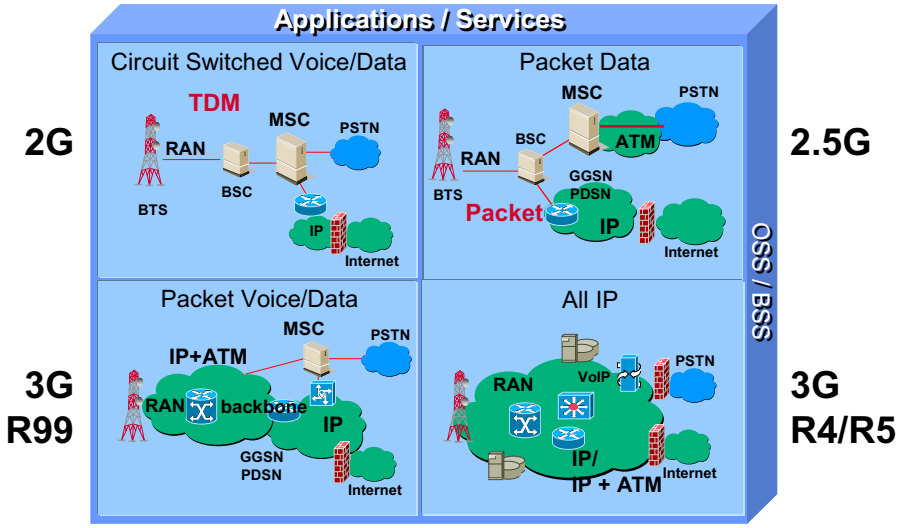

Basic ATM backbone Network

Mixed 2G and 3G

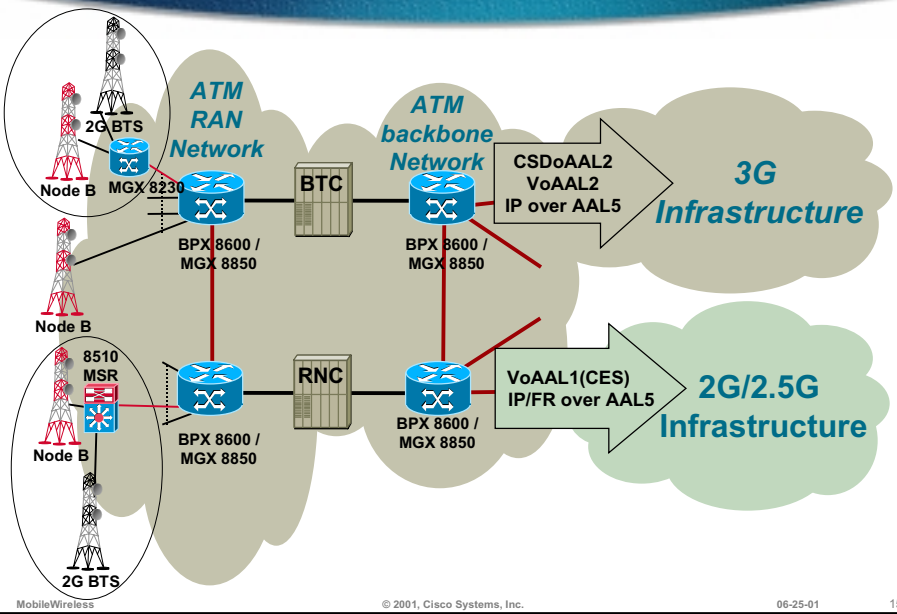

Basic ATM backbone Network

3G Only

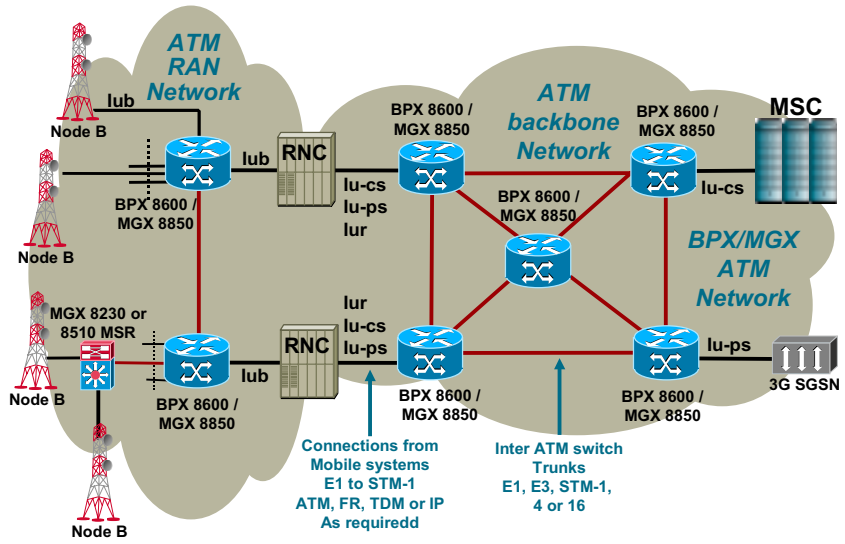

Cisco Multi Service Switching

- Redefine economics of the carrier infrastructure
- Enable IP on a Multi Service network
  - Integrate the IP+ATM edge with the IP backbone
- Leverage the next generation packet backbone for voice
  - Deliver integrated voice/data access and transport

ATM RAN for Collocated GPRS and UMTS Cell sites

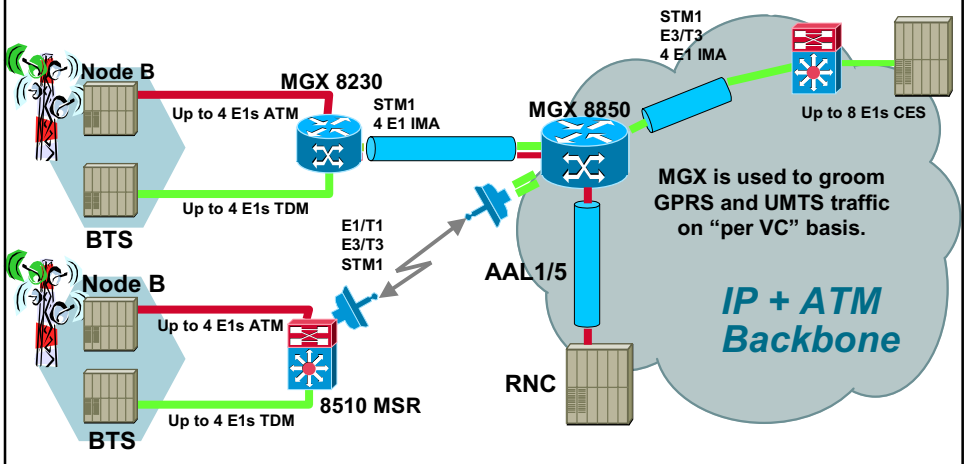

Value Proposition

- Investment today in Packet Solutions provides immediate benefits and prepares networks for 3G.
- Requires fewer TDM ports than a TDM Transit Switch solution.
- Reduces the number of TDM circuits required by offloading TDM traffic onto Multiservice Packet Based Infrastructure. e.g. GPRS IP network.
- Investment Protection:
  - Evolutionary approach protects existing investment in TDM switches.
  - Solution is 3G prepared. Evolves to provide the PSTN Gateway function specified in 3GPP unlike TDM transit switches which require replacement for 3G.

© 2001, Cisco Systems, Inc.

Key Solution Benefits

- Supports a wide range of edge interfaces
  - ATM (E1/T1, IMA, DS3/E3, OC-3/STM-1, OC-12/STM-4)
  - Frame Relay, Circuit Emulation, IP Support
- Rich QoS Capabilities
- Seamless integration/migration option to Layer 3
- Easy upgrade to MPLS

© 2001, Cisco Systems, Inc.

Mobile Operators Need Both IP *and* ATM

IP for delivery of advanced value added services and and migration to R4/R5

- 2G and 2.5G integration
  - TDM and Frame Relay transport
- 3G R99 Backbone
- Alternate access integration
  - FWA, DSL, etc.

© 2001, Cisco Systems, Inc.

"Plug In" to a Common ATM Infrastructure

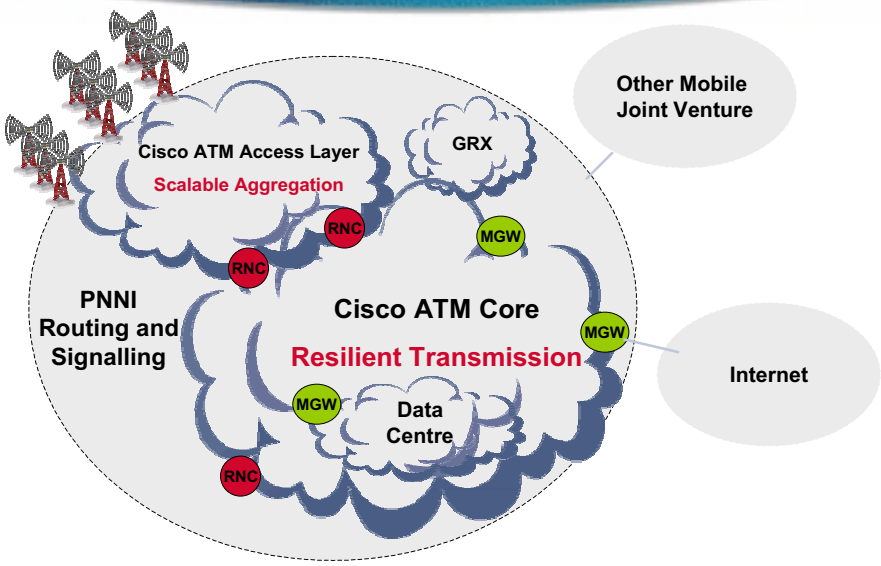

© 2001, Cisco Systems, Inc.

IP+ATM backbone solution

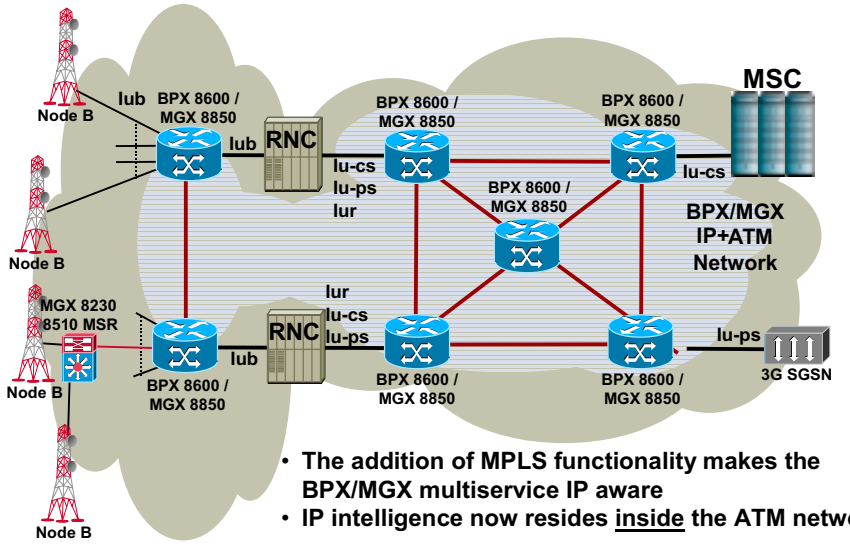

- The addition of MPLS functionality makes the BPX/MGX multiservice IP aware
- IP intelligence now resides <u>inside</u> the ATM network

© 2001, Cisco Systems, Inc.

Cisco products for IP +ATM transport

- Catalyst 8510

- MGX 8230/MGX 8250

- BPX 8600 series

- MGX 8850 PXM-45

© 2001, Cisco Systems, Inc.

Cisco IP+ATM MPLS Switch Router

Cisco 7204 Router + Label Switch Controller S/W	+	CisBPX ATM Switch	=	Cisco IP+ATM MPLS Switch Router
OR				
Route Processor Module (7200 Router blade)	+	MGX ATM Switch	=	

Upgrade available for <u>any</u> Cisco BPX 8600 or Cisco MGX 8850 system ever shipped

In Production Networks Today!

© 2001, Cisco Systems, Inc.

IP Awareness in Cisco's IP+ATM Switches

ATM Partition
- Bandwidth allocated by VC

MPLS Partition
- Bandwidth allocated by class
- Separate labels per class

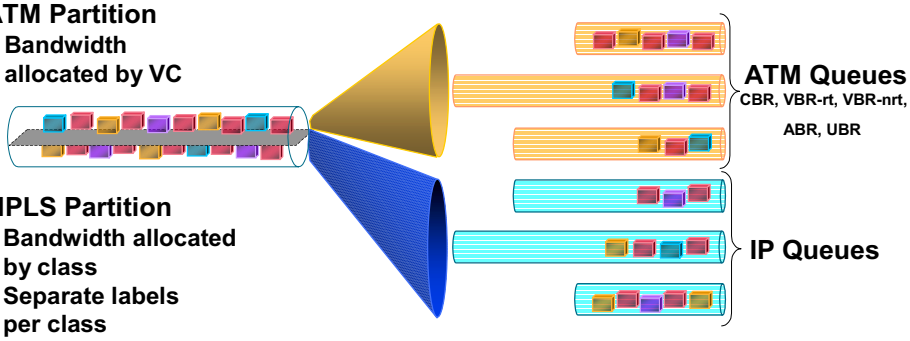

- Total of 16 configurable queues available
- Choice of IP integration methods
  - Standard ATM queues and bandwidth or
  - Dedicated queues and partitioned bandwidth

© 2001, Cisco Systems, Inc.

IP+ATM: The Best of Both Worlds

- 2G voice transport (CES)
- 2.5G data transport
  - FR/ATM service and network interworking + IP routing
- 3G ATM RAN aggregation and transport
- 3G VoAAL2 gateway capability
- 3G data transport + integrated IP routing

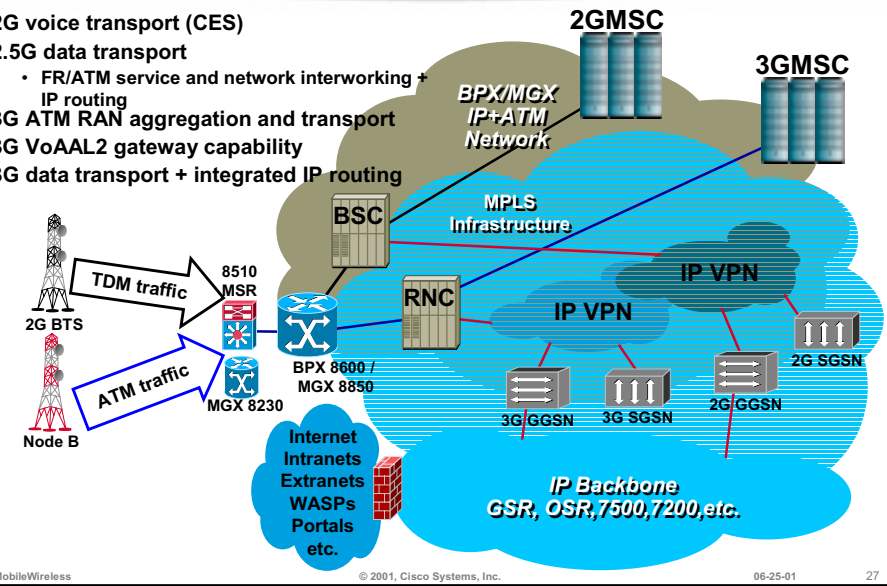

3G R99 ATM Solution

Market

- 2G/GSM
  - Operators are getting ready for packet based data services (GPRS)
  - Voice infrastructures are expanding fast
- 3G/UMTS
  - Licenses are being awarded now - typically 4+ per country
  - Network build-out is starting and will accelerate!

Solution

- Cisco BPX 8600 / MGX 8850 IP+ATM switches integrate the key requirements of 2G and 3GR99 systems into a single platform
- IP integration with backbone IP platforms – GSR, OSR, 7500, etc.
- MGX 8230/8510 MSR provides ATM and TDM transport for RAN sites
- Smooth infrastructure migration from 2G/GSM to 3G[1999] and then to 3G[2000]
- A true multiservice solution which integrates frame relay, ATM and IP in a single platform

3G R99 ATM Solution

Competitive

- We have the only deployable and proven IP+ATM solution
  - Scalable from 9.6 to 45Gbps
- The IP/MPLS capabilities of our IP+ATM platforms are 100% compatible with our industry leading routing platforms
  - Common IOS thread across all platforms

Direction

- The evolution of the IP+ATM portfolio is a continual process
  - Increased performance for both ATM and IP functions
  - Integrated voice gateways and switching

© 2001, Cisco Systems, Inc.

Building dual backbones for migration to UMTS

- For customers who have existing separate IP and ATM networks
- Uses MPLS for common control plane
- Provides continuous revenue from ATM network while IP revenue is low
- Provides graceful migration to IP over time

© 2001, Cisco Systems, Inc.

IP+ATM Networks

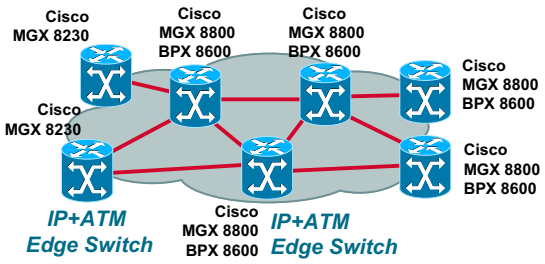

- In an IP+ATM network, both edge and core switches support:
  - ATM & FR PVC and SVC services
  - MPLS services & VPNs
- All services are fully integrated on one set of switches and one set of links

IP+ATM Networks

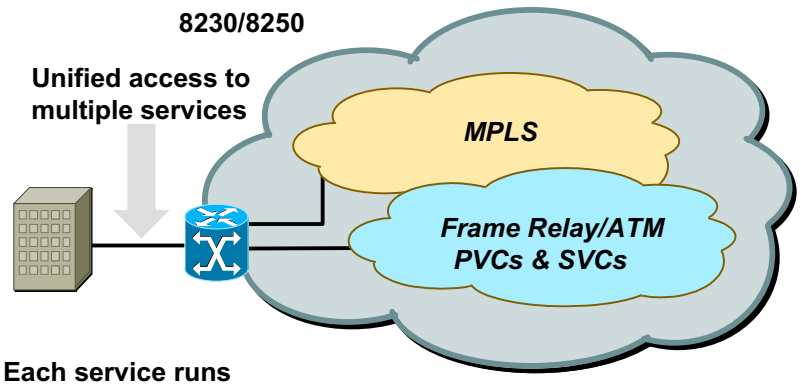

Each service runs
"natively" on the ATM Switches
- no overlays
- resources partitioned by service

IP+ATM Networks

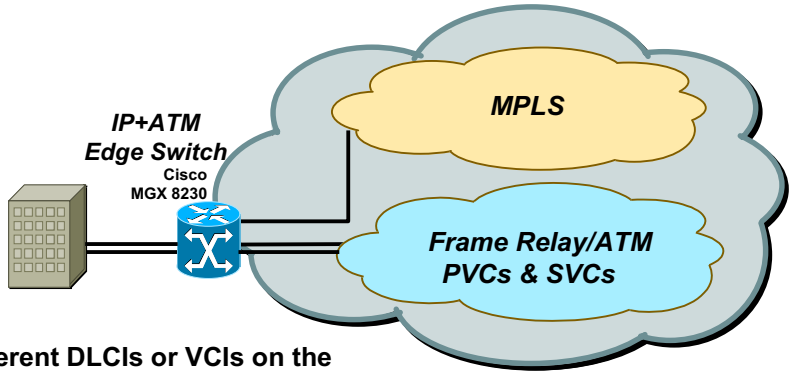

Different DLCIs or VCIs on the same customer link can go to different services in the IP+ATM network.

Mobile Solution Summary

- Industry leading Integrated IP+ATM and dedicated IP capabilities
- Common platform for 2G and 3G transport

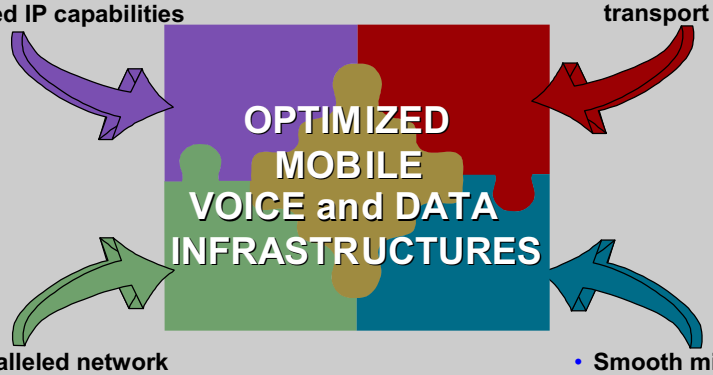

- Unparalleled network reliability
- Smooth migration from R99 to R4/R5

Cisco IP+ATM Solutions

Cisco Mobile wireless customers with IP + ATM

- Verizon
- BTcellnet
- Sonofon
- Hutchisons
- Orange
- Amena
- Tritel
- Voicestream

© 2001, Cisco Systems, Inc.

CISCO SYSTEMS

EMPOWERING THE INTERNET GENERATION℠

© 2000, Cisco Systems, Inc.

Generic 2G Model

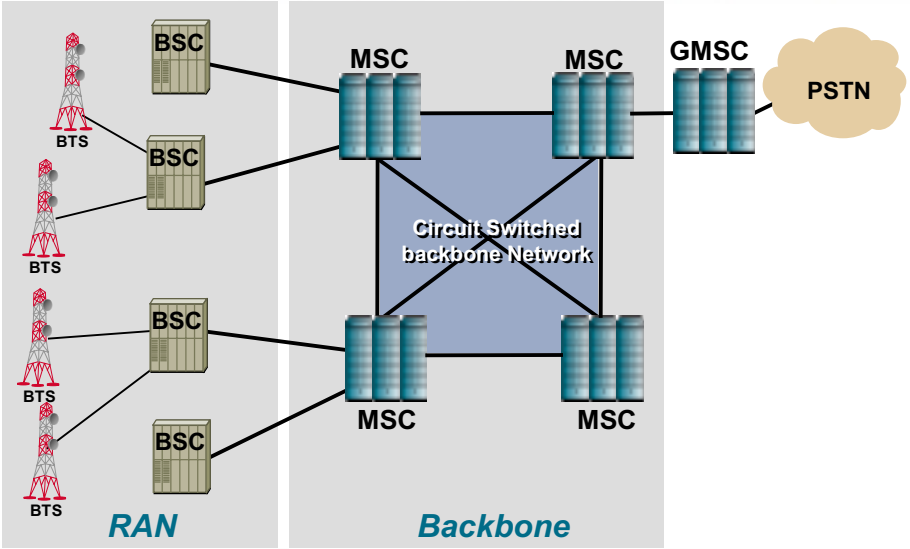

2G evolution to 2.5G

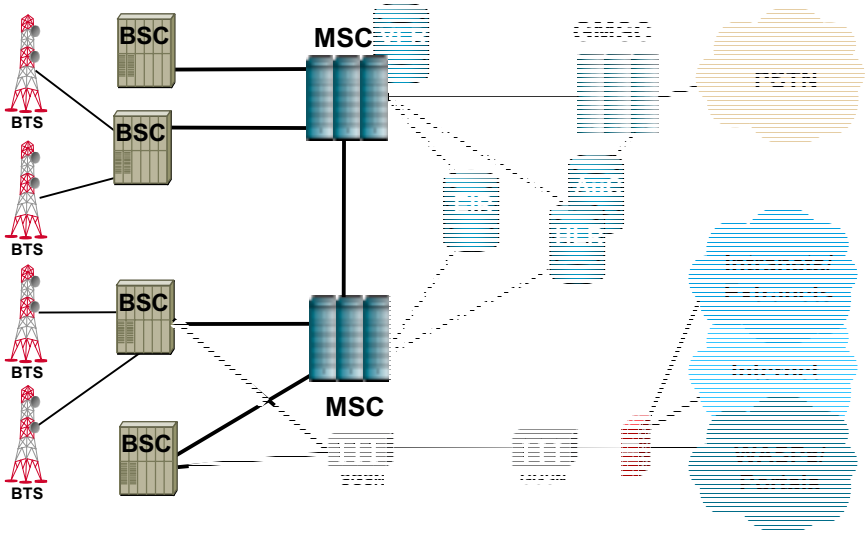

Migrating 2G to an ATM backbone

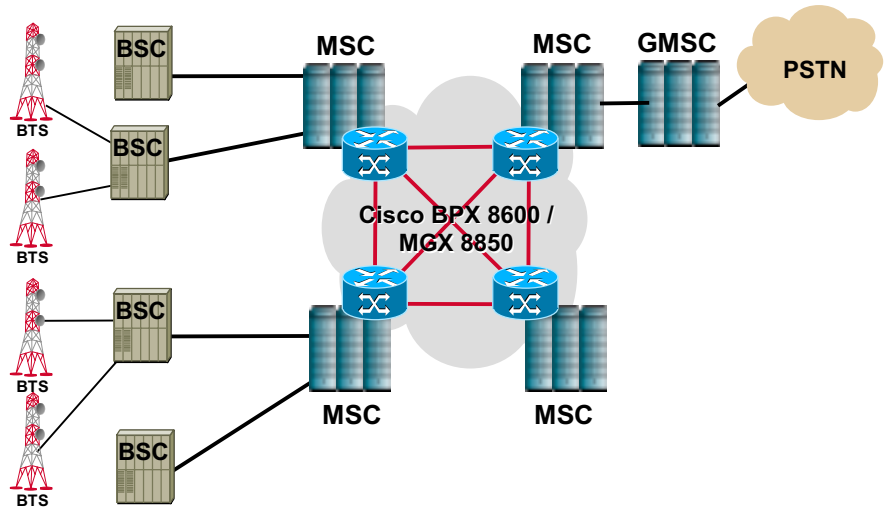

Generic R99 Model

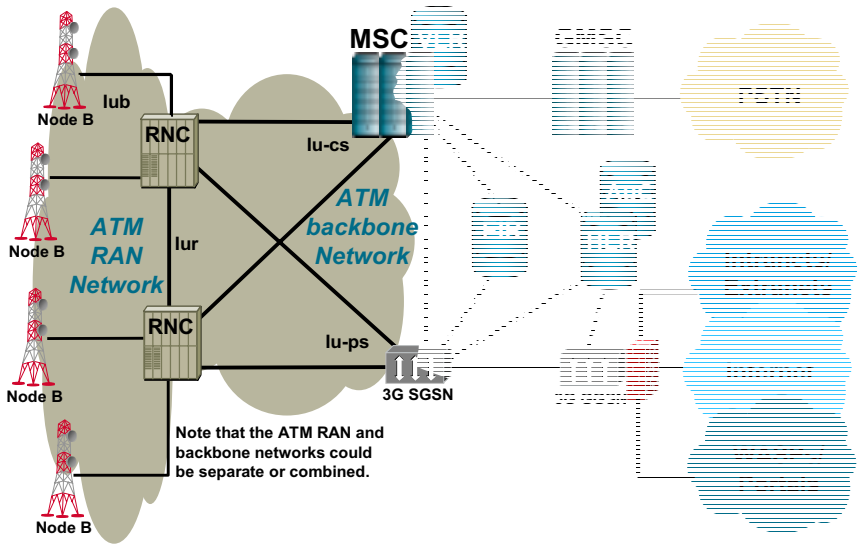

Generic R99 Model
Significance of IP

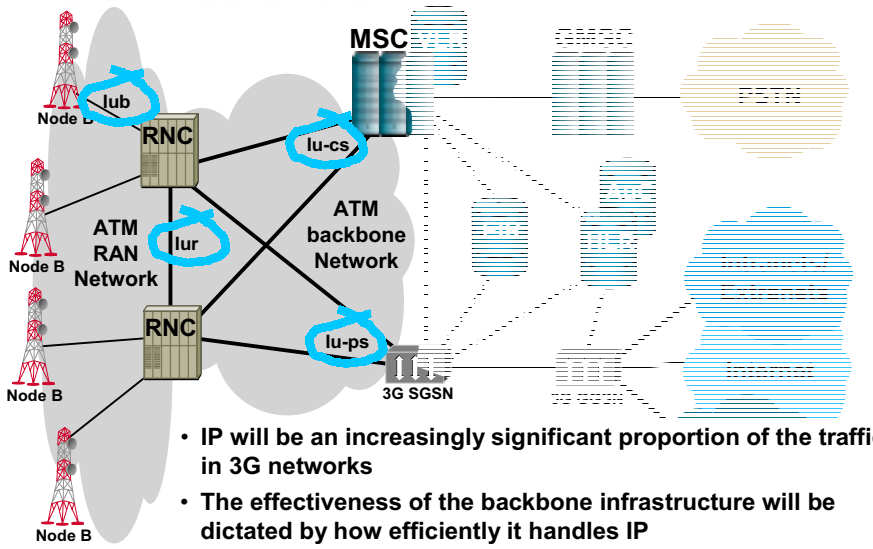

- IP will be an increasingly significant proportion of the traffic in 3G networks
- The effectiveness of the backbone infrastructure will be dictated by how efficiently it handles IP

Catalyst 8510 MSR IP+ATM for RAN Aggregation

- 10Gbps non-blocking switching capacity
- Breadth of Services
  - ATM: T1/E1 to OC-12c/STM-4
    - 64 T1/E1
    - 32 T3/E3
    - 32 OC-3c/STM-1
    - 8 OC-12c/STM-4
  - IP: 10/100 FE to GE
    - 32 10/100 FE
    - 4 GE
  - Frame Relay and Circuit Emulation
- PNNI
- Flexible for today and tomorrow's network requirements

Cisco MGX 8230 IP+ATM Edge Concentrator

- 1.2 Gbps non-blocking switching capacity
- Channelized T1/E1 to OC-12c/STM-4
- Supports up to 448 T1/E1s
- Multiservice
  - Frame Relay
  - ATM
  - High-density Frame Relay
  - Circuit Emulation
  - Voice (VoIP, VoATM)
  - IP/MPLS
- Local Switching
- Edge Concentrator for BPX 8600, MGX 8850 and IGX 8400 series Multiservice Switches
- Optimized for reduced space and power requirements

© 2001, Cisco Systems, Inc.

Cisco BPX 8680 IP+ATM Multiservice Switch

- 10 Gbps non-blocking switching capacity
- Channelized T1/E1 to OC-12c/STM-4
- MGX/BPX Solution
  - MGX service density and flexibility with BPX switching
- Delivers industry-leading services breadth
  - Frame Relay
  - ATM
  - Voice (VoIP, VoATM)
  - Circuit emulation
  - IP/MPLS
- MPLS-enabled
- Autoroute
- PNNI
- Carrier-proven reliability

© 2001, Cisco Systems, Inc.

MGX 8850 PXM-45 IP+ATM Switch for Backbone Switching

- 45Gbps non-blocking switching capacity
- T3/E3 to OC-48c/STM-16
  - •192 T3/E3
  - •192 OC-3c/STM-1
  - •48 OC-12c/STM-4
  - •12 OC-48c/STM-16
- Highest broadband density for WAN ATM switch

© 2001, Cisco Systems, Inc.