White Paper

Running Out of Bandwidth? Take a Fresh Look at 100G

Introduction

Service providers around the world share concerns about running out of bandwidth. Business challenges surrounding continued bandwidth growth, linked to video, mobility, and cloud applications, are significant. Service providers also report declining revenue from a cost-per-bit perspective, so not only does the network need to grow, it also needs to grow more cost effectively. The Cisco Virtual Networking Index™ (Cisco VNI™) predicts that over 50 billion devices will be connected over these networks by 2020. The network effects of the Internet of Things, LTE mobility, and mobile video are just beginning to be understood. In a world where mobile device network additions are growing four times faster than the population, and machine-to-machine (M2M) device network additions are growing five times faster than mobile device additions, this problem is clearly becoming highly important and requires a good solution.

To solve this challenge, it's best to deconstruct the problem. In the case of bandwidth growth, all the described services share some component of network connectivity. Network connectivity over the highest-bandwidth metro, regional, or core portions of networks requires dense wavelength-division multiplexing (DWDM) transport technology. This technology has primarily been deployed with 10G lambdas or channels, resulting in 10G scale and 10G price points. 10G technology has been an attractive solution as a result of investments during the previous technology boom. A more recent period of 100G investment, led by Cisco, is now producing higher scale, better performance, lower power consumption, smaller form factors, and compelling price points. This white paper describes each of these technological advances and how this 100G benefit in scale can even be accomplished with existing, fully depreciated, legacy 10G DWDM systems.

The Solution

Given all the technology and market trends just described, transporting services over 10G trunks or waves is just not viable any longer. When your aggregated service demands are 1G and 10G or higher rates, the trunk ports need to support a rate that is at least an order of magnitude higher to manage the workload effectively. To maintain proper operational scale and extend the life of the service provider's fiber investments, 100G trunking just makes more sense.

Currently 100G coherent technologies are at the beginning of what's destined to become a prolific new network life cycle. In many ways, 100G is much like 10G was back in the early 2000s, when initial products were deployed in the long-haul and core portions of the network first, and then the base technology migrated out to, essentially, all parts of the optical transport network over time. This migration will happen to 100G coherent technology as well, as the product research and development (R&D) investments create solutions that fit across a wider range of network applications, and as they go from today's discrete component-based DWDM modules to highly integrated silicon photonic pluggable 100G modules. Those 100G silicon photonic pluggable modules offer lower cost points, lower power consumption, and lower space requirements.

One big difference between legacy 10G and coherent technology is the ease of use, all the way from the network-planning phase through the deployment phase. Coherent technology has incorporated digital signal processing chipsets (DSP) in the transceiver modules and that means that 100G DWDM optics deployments have become easier. Now the service provider does not need to know complex optical physics and fiber waveguide-transmission theory to procure, plan, and deploy high-speed optical networks, span by span. Most of that deployment operating expense (OpEx) has been removed from the equation because the DSP does all the “hard work” for you. In return for this freedom, service providers can focus their time and energy on what matters most to them, the services they deliver to their customers and the revenue produced by those services.

In fact, the enhancements provided by coherent technology are encouraging service providers to build 100 percent coherent networks for new networks. This provides the following great benefits:

- There is no need to purchase, plan, and install dispersion compensation units (DCU), because they are not needed.
- Without DCUs in the network, overall network performance is better, with respect to amplifier design and their inherit noise figures, which saves money by extending optical reach (which allows elimination of optical regenerators, in most cases).
- Multiple 10G services can be quickly added to the network by provisioning pluggable client ports on 100G muxponders, rather than adding new 10G transponder cards as we do today.
- Cisco 100G solutions offer up to 10 times the efficiency in space utilization.

To be clear, these coherent technology benefits are not just for new deployments. Many of the same benefits can be gained on existing, depreciated network infrastructure. In fact, today’s 100G technology can extend the life or investment profile of those networks by tenfold. For example, a service provider may be running a network that was installed five years ago using 100-GHz spaced filter technology. Due to their success and the current bandwidth explosion of services, service providers may only have 10 channels left, at 10G per channel on the legacy network. If 10x10G to 100G muxponder cards were deployed on those remaining 10 channels, then the service provider has effectively extended the life of the existing network and remaining bandwidth by up to 10 times. Figure 1 gives a simple illustration of this network across a single optical span.

Figure 1. Substantial Gains from Deploying 100G on the Remaining Channels of a Legacy 10G Network

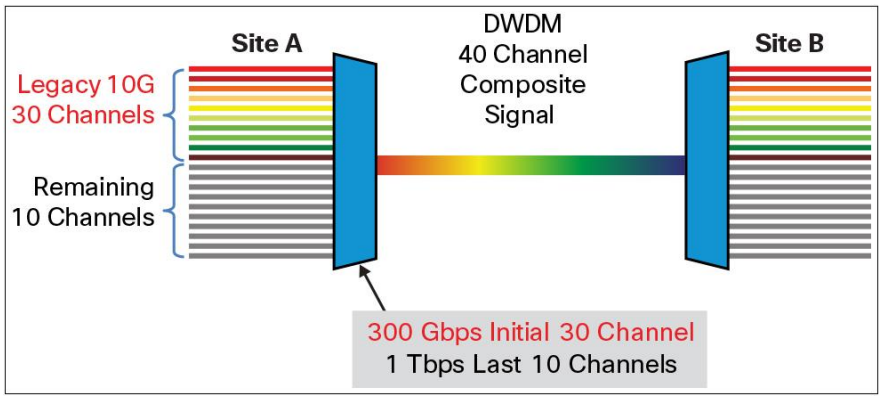

Of course, the initial cost of 100G is higher than 10G today (although that is quickly changing), but this difference is less, when you factor in all the costs associated with planning, deploying, and operating a network. Today's 100G modules take up fewer slots in the chassis than legacy 10G systems. The network planning and design is greatly simplified due to coherent technology, and adding services and bandwidth to the transport network is quick and easy. This 100G solution can even be deployed as an alien wavelength in another manufacturer's legacy 10G network to take advantage of all the depreciated assets in the field.

Economic Analysis

Figure 2 illustrates the simple comparison of a 10G transponder and a 100G muxponder, which was used for this analysis, and shows the per-channel service increase that is possible.

Figure 2. Legacy 10G Transponder vs. 10 x 10G to 100G Muxponder

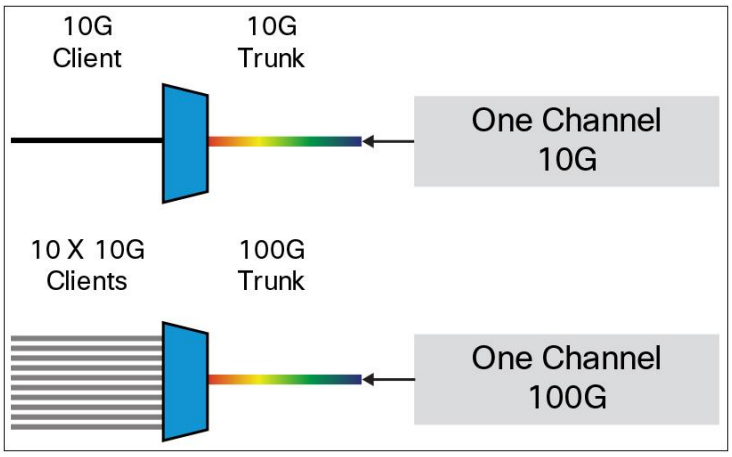

In this analysis, the Cisco 100G solution, when compared to Cisco 10G or any competitive current 10G DWDM transponder solution typically yields the following result ranges:

- At first, the 100G lambda with 10G client is two to three times more expensive than 10G.
- The break-even point between using 10G or 100G DWDM trunks usually occurs between the second and fourth 10G client interface, depending on the network design and per-product price points.
- The final solution is typically 40 to 70 percent less expensive than current 10G transponders, comparing 10 x 10G transponders to one 100G muxponder with 10 x 10G clients.

These advantages occur regardless of the optical span length or the number of reconfigurable optical add-drop multiplexer (ROADM) degrees or amplifiers at a site. If the legacy 10G channel can reach the optical span, the 100G coherent solution from Cisco can as well, with no guard bands and no additional regens or other hidden penalties. The performance can really be that much better. In addition, the following operational benefits can be realized:

- Added optical span budget for the 100G muxponder, due to coherent detection
- 10 times fewer devices to manage for equivalent service delivery
- No need for dispersion compensators for 100G coherent optics
- The option to use 100G coherent optics as an alien wavelength in an existing 10G deployment
- Ability to deliver 100G services
- Better utilization of the fiber plant

Summary

Early 100G DWDM solutions suffered from high prices, poor performance, high power consumption, and poor use of space, compared to 10G. A new crop of 100G products from Cisco has leveled the playing field. While this 100G technology is being used in Cisco products, ranging from data center to core routing to DWDM, the optical use cases can be particularly compelling. Using the new 100G technology with your embedded base of ROADM and amplifier technology, no matter which manufacturer, can gain even more out of an old investment that might have been considered obsolete. Using the new 100G technology in a Greenfield deployment can yield even greater results, streamlining capital expenditures (CapEx) and OpEx in the process. No matter where you are in the technology life cycle, 100G deserves a fresh look.

For More Information

For more information, visit http://www.cisco.com/go/100G.

Americas Headquarters
Cisco Systems, Inc.
San Jose, CA

Asia Pacific Headquarters
Cisco Systems (USA) Pte. Ltd.
Singapore

Europe Headquarters
Cisco Systems International BV Amsterdam,
The Netherlands

Cisco has more than 200 offices worldwide. Addresses, phone numbers, and fax numbers are listed on the Cisco Website at www.cisco.com/go/offices.

Printed in USA C11-731082-00 03/14