Accelerating digital transformation in Oil & Gas with multi-protocol industrial wireless

Cisco Gulf Region Webinar Series
May-June 2020

Speakers

Dan Holme

Systems Architect
Global Industry Partners
Cisco

dholme@cisco.com
www.cisco.com

Diederik Mols

Business Director
Industrial Wireless Solutions
Honeywell

Chairman of the Board
ISA100 Wireless Compliance Institute

diederik.mols@honeywell.com
www.honeywell.com

Agenda

Cisco perspective on O&G
The Digital Enterprise, IoT and Industrial Wireless
Cisco Ecosystem – Honeywell
Cisco and Honeywell Multi-protocol Wireless
Cisco and Honeywell Use-case Examples
Summary

Cisco Perspective

Priorities in Upstream (Exploration and Production)

Innovate with field automation

Extend automation capabilities onto onshore assets for remote decision support and digital surveillance

Optimize oilfield assets

Maximize recovery and production with new E&P techniques + use field instrumentation to reduce costs for energy and waste

Manage a changing workforce

Attract and keep new (often younger) field workers and ensure safety and productivity remain high

Technology Trends in Upstream

(Exploration and Production)

Digital surveillance

Remote SCADA data collection from wells; remote control of instrumentation; video feeds

Predictive maintenance

Data and edge computing to predict failures to components such as lift rods, pumps, and compressors

Well instrumentation

Critical OT data gathering for production volumes, well tests, water levels, and tank levels

Digital workforce

Access to tools, data, and collaboration applications for field workers to increase productivity and safety

Priorities in Midstream (Pipeline)

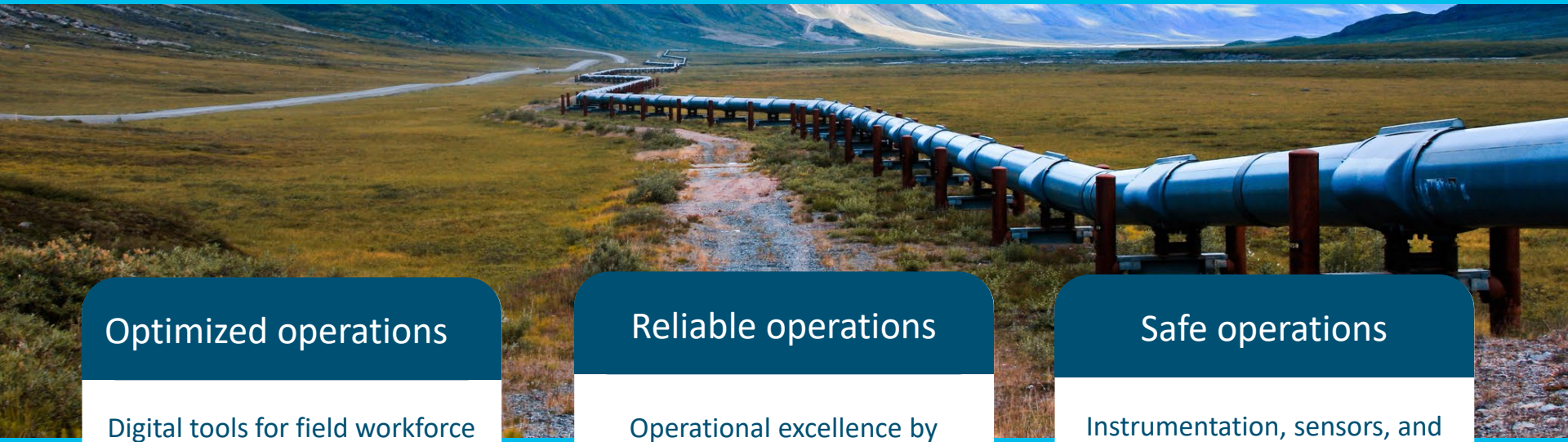

Optimized operations

Digital tools for field workforce and field assets (ex: pumps, compressors) to lower costs to operate and maintain the pipeline

Reliable operations

Operational excellence by reducing unplanned downtime related to maintenance and cyber events

Safe operations

Instrumentation, sensors, and imaging to help operators detect conditions that could impact environmental and public safety

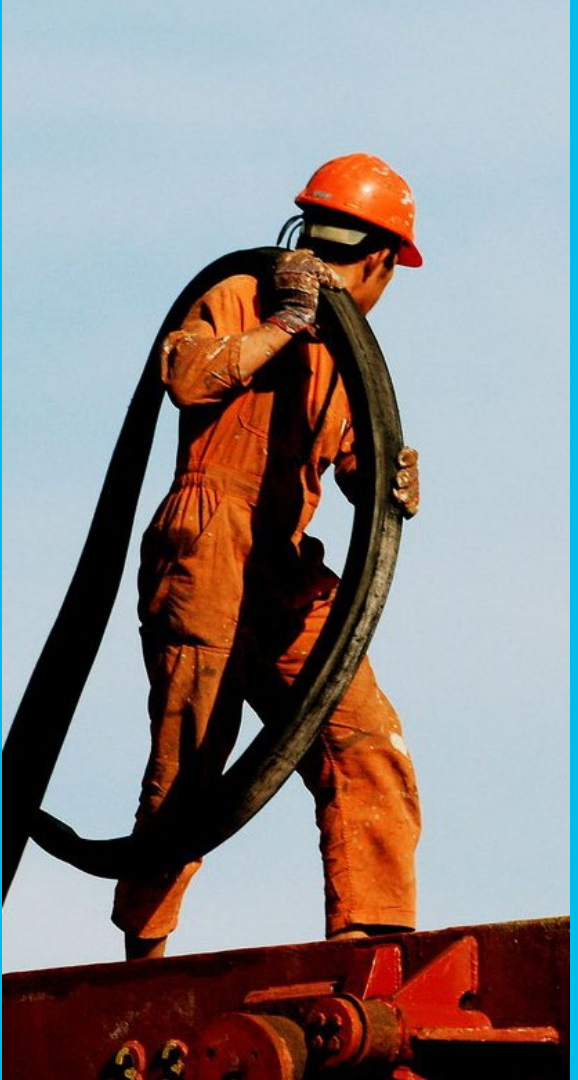

Technology Trends in Midstream (Pipeline)

Pipeline Instrumentation

Automated data collection and integration into the pipeline integrity and DCS systems for real-time pipeline operations visibility

Predictive Maintenance

Data and edge computing to predict failures to components such as pumps and compressors

Leak Detection

Automated and advanced capabilities to detect leaks to maintain safety and compliance

Digital Workforce

Access to tools, data, and collaboration applications for field workers to increase productivity and safety

The Digital Enterprise, IoT and Industrial Wireless

Cisco Platform for Oil & Gas Digital Enterprise

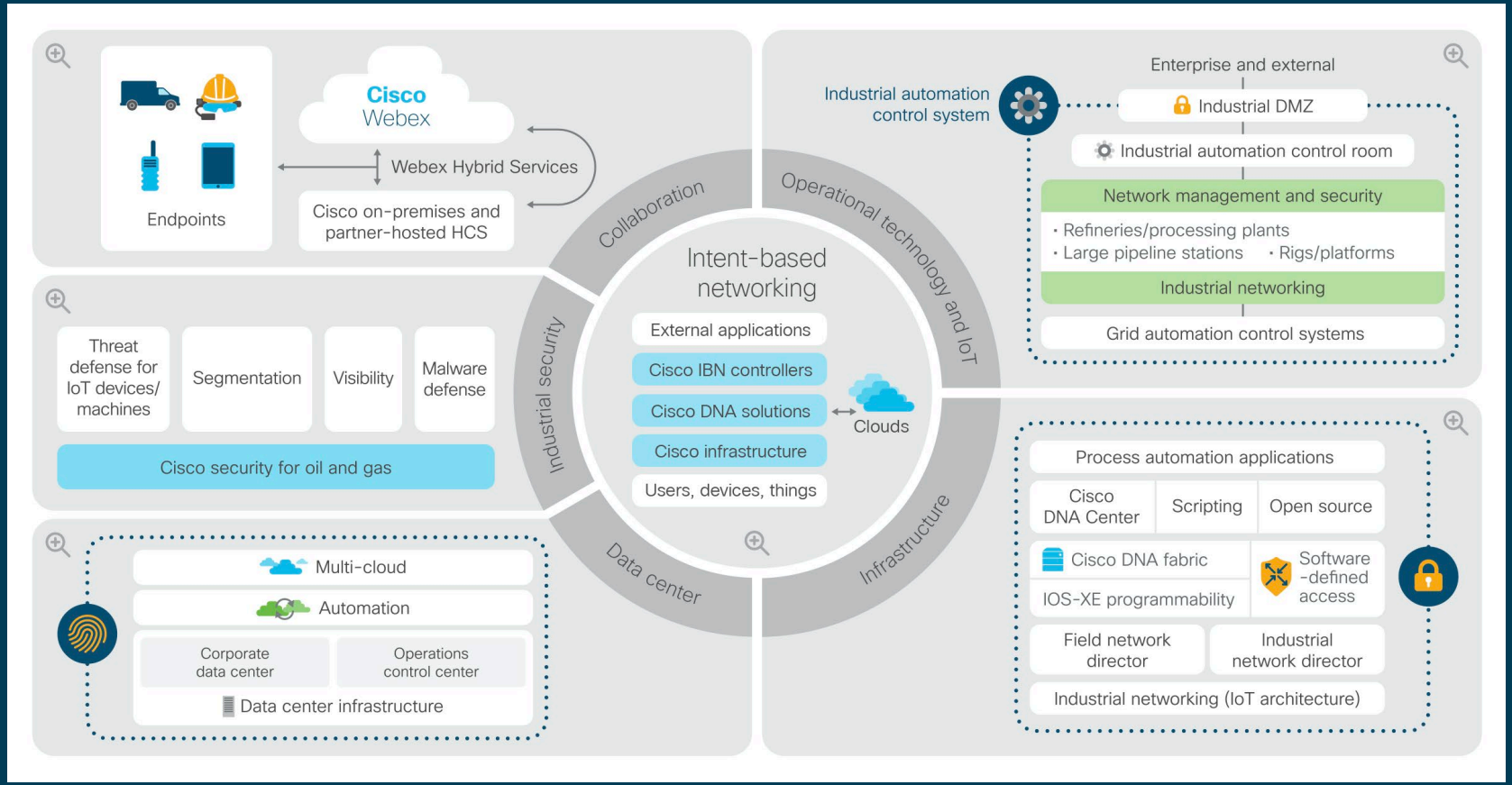

Supporting and Driving Digital Transformation

Business Intent & Security Policy

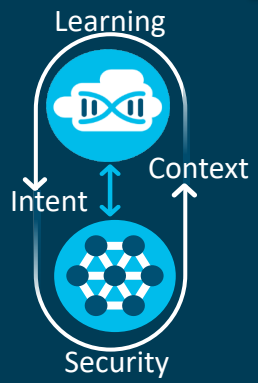

Automation & Assurance

Digital Enterprise

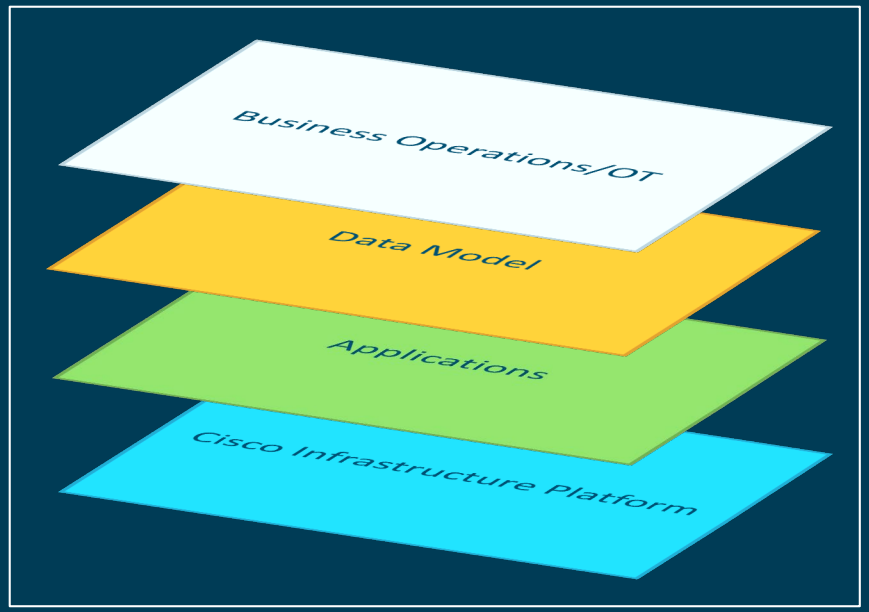

Business Insight

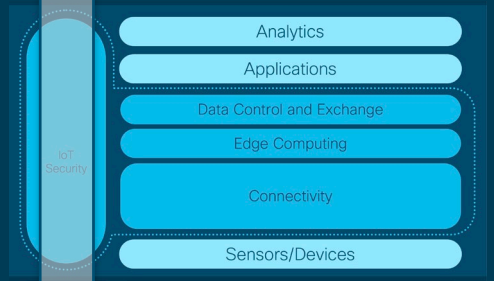

Devices & Things

An unparalleled end-to-end IoT portfolio

Network connectivity

Connectivity management

Data control and exchange

Edge computing

Cyber Security

Cisco's industry-leading IoT portfolio

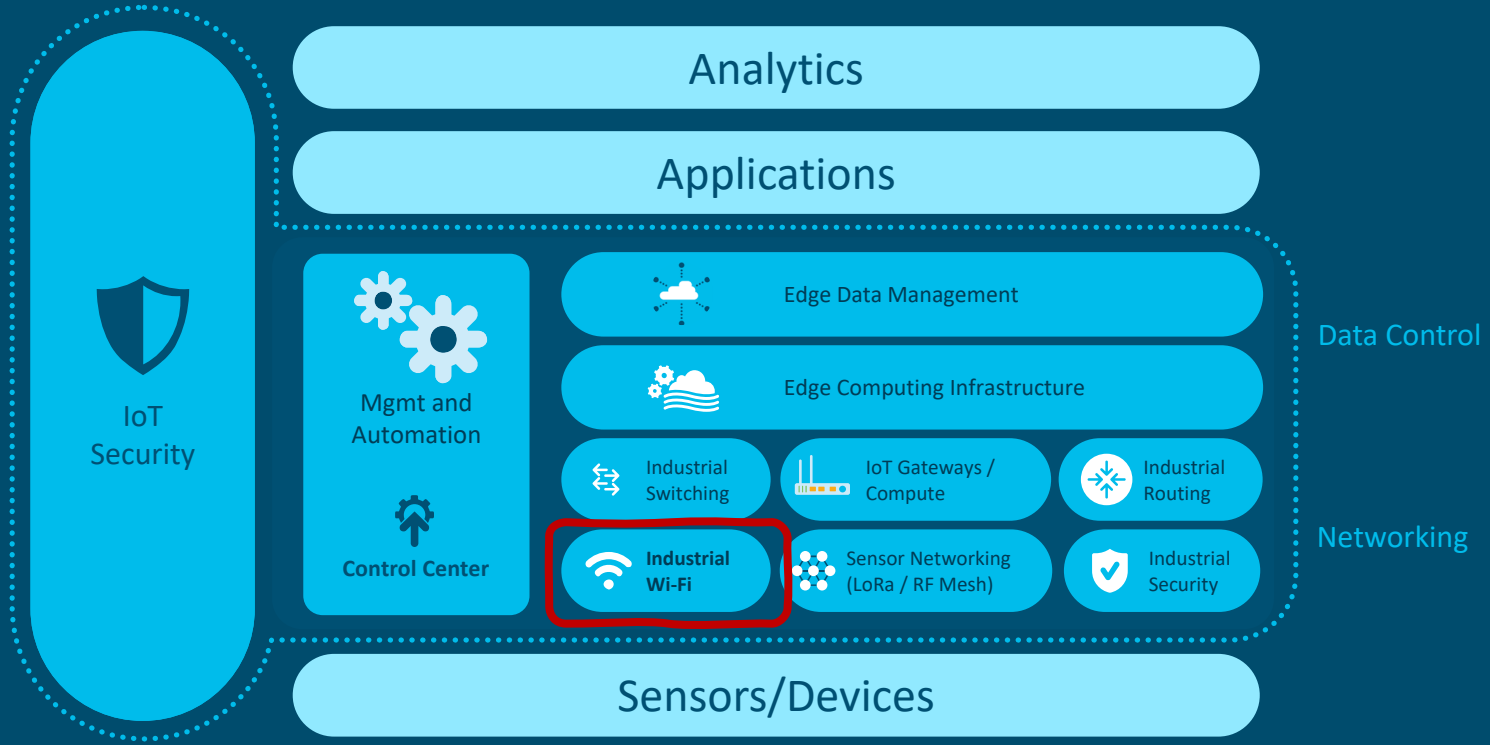

The most comprehensive network portfolio, now expanded to meet the harshest conditions

Cisco Catalyst IE3400
Heavy Duty Series Switch

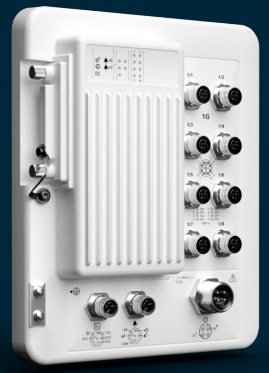

Secure Connectivity in a
Heavy Duty Design

Cisco Catalyst IW6300
Heavy Duty Series
Access Points

Extend Intent Based Networking
to
Hazardous Locations

Cisco Industrial Router 1101
with Industrial
SD-WAN

Visibility and Control from
Enterprise to the Edge

Industrial Wireless Key Use-cases

Use cases

- Wireless Mobile Worker
- Plant Turnaround
- Remote Expert
- Personal Health & Safety by detecting and monitoring leaks
- Asset and Personnel Location Tracking enabled by Cisco wireless location-based services solution
- Wireless Bridging extend connectivity to remote site
- Physical security provided video surveillance over mesh network

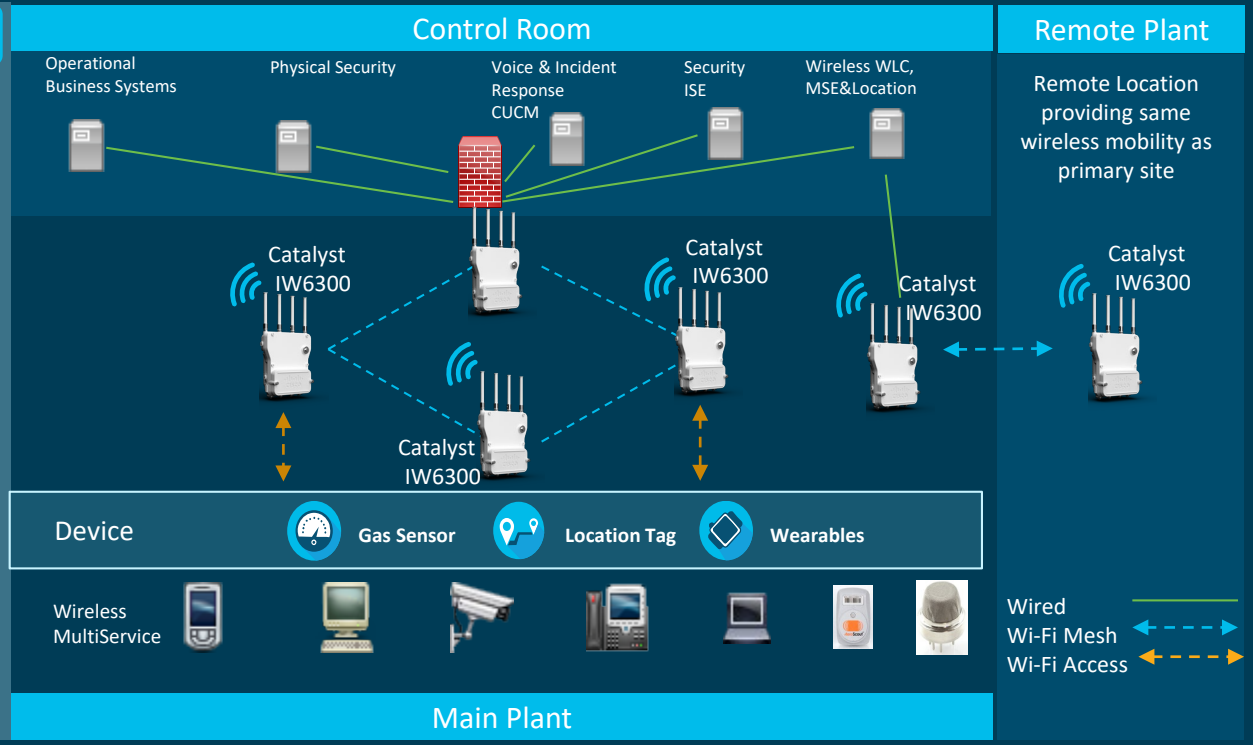

Catalyst IW6300 Heavy Duty Series Access Points

Cisco®
Catalyst®
IW6300
Heavy Duty

- Hazloc certified: Class I, Division 2/Zone 2
- Simpler deployment with light and more compact design
- 802.11AC Wave 2
- IoT module for enhanced capability
- Cisco® Digital Network Architecture (Cisco DNA) ready

Extend Intent-Based Networking to Hazardous Environment

IW6300 At a Glance

- 802.11 ac wave 2, 2x2 MIMO with 2 spatial streams
- Dual PoE/PoE+ out to power other devices
- Wide variety of power source: AC/DC, PoE+,UPoE
- Multiple uplink options: SFP, Ethernet and wireless
- Versatile RF coverage with external N-type antenna connectors
- Resilient WiFi Mesh architecture support to reliably extend the network
- Dust and water protection (IP67-rated)
- Operate in extended operating temperature range (-50 to +75° C)

IW6300 Series Hazardous Location Certification

- CSA certification for North America
  - Class I, Division 2, Groups A, B, C, D
- ATEX certification for EU countries
  - Class I, Zone 2, Groups IIC, IIB, IIA
- IECEx certification
  - Class I, Zone 2, Groups IIC, IIB, IIA

Class I area classification – Flammable gases, vapors, or liquids	
North America (NEC 500)	ATEX / IECEx (NEC 505)
Division 2: Where ignitable concentrations of flammable gases, vapors, or liquids are not likely to exist under normal operating conditions.	Zone 2: Where ignitable concentrations of flammable gases, vapors, or liquids are not likely to exist under normal operating conditions.

Source: UL's Hazardous Locations Services

It’s a Catalyst…

Simplified operations, intent-based networking all the way to the IoT edge

- IOS XE compatible, SDA-ready
- Central network policy control
- Proactive management

Cisco DNA Center

Manage and monitor IoT network with the same tools that manage the IT network, such as Cisco DNA Center

Cisco Ecosystem - Honeywell

OT / IT Management Requirements for IoT Deployments

OT Requirements

- Replicable
- Simple to operate
- Reliable
- Easy to fix / restore
- Wireless: ISA100, WirelessHart

IT Requirements

- Flexibility
- Security
- Policy Driven
- Extensible
- Wireless: IEEE802.11

Customer Driven: Need the right tool for each persona

Bridging the gap between IT and OT

OT Typical Needs and Challenges

- HSE Compliancy
- Improve
  - workforce efficiency
  - productivity
  - asset availability
- Reliable, cyber secure infrastructure
- Fast and cost-effective commissioning
- Tight budgets to execute projects

Zero Incidents, No Unplanned Downtime, Tight Cost Control

Introduction to industrial Wireless

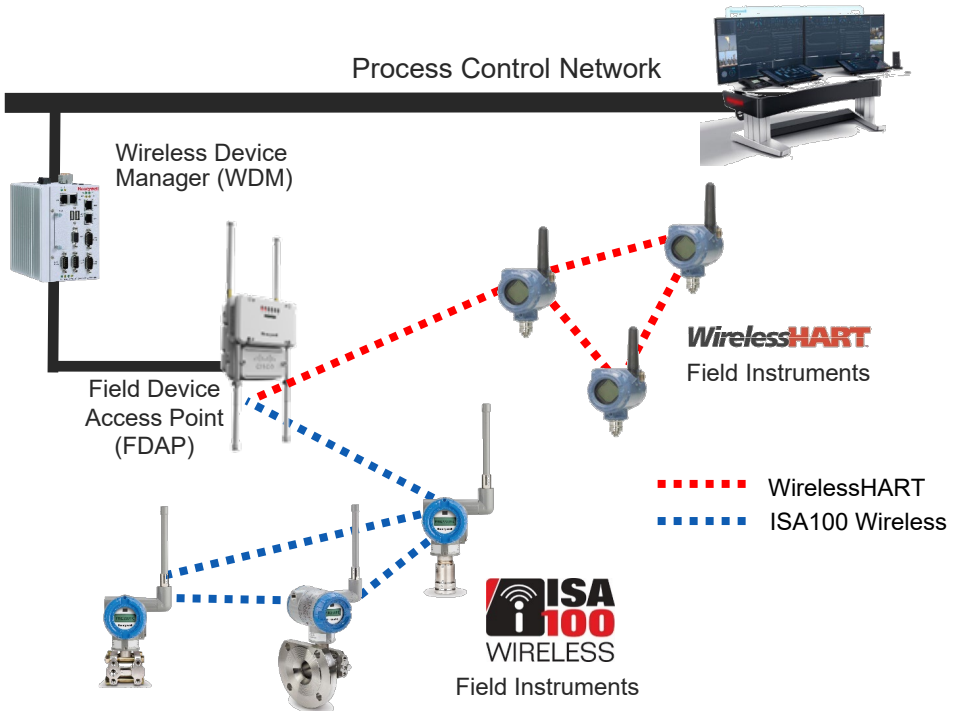

Application examples

- Machine health monitoring
- Basic process control
- Remote process monitoring
- Leak detection monitoring
- Diagnosis of field devices
- Condition monitoring of equipment
- Environmental monitoring
- Tank level monitoring
- Gas detection
- Fuel tank gauging
- Steam trap monitoring
- Open loop control
- Safety shower monitoring
- And more

Wireless typically is a Cost Efficient way to connect Field Instruments

Honeywell OneWireless

No Hardware Change!

Software Innovation

Field Upgradable!

2011

ISA 100 WIRELESS

Up to 25% More Cost Effective relative to Separate Networks!

2017

Wi Fi™

WirelessHART™

Up to 50% More Cost Effective relative to Separate Networks!

Delivering Best Value on CAPEX and Future Expansion

Honeywell

Other UNIQUE FEATURES

Special Interface Network (SIN)

- Segregate Data From PCN Network – IIOT and Asset Management solutions
- External Interfaces allowed over SIN – Modbus, Enraf, OPC, GCI, HART

Field Expandable Wireless IO (FEWIO) - a new device type

- FDAP as router can be converted to a Field Expandable Wireless IO (FEWIO)
- Data collected over RS485 & transmitted to control room over wireless
- FEWIO Supports
- Modbus RTU
- RS-485 serial Interface used for connecting to serial interface devices
- Modbus TCP

Honeywell

Latest innovations of Honeywell OneWireless R320

- Control over wireless
- ISASecure Certification
- Secure Communications - IPsec
- SIN Redundancy
- WDM Improvements
- Virtual WDM – 3000 Wireless IO

Honeywell

Control over Wireless

- OW systems can be used for control applications
- ISA100 Wireless AO devices supported
- For PID loops
- Input device can be wireless

Type	Class	Type Based on Industry	Recommendation
Control	1	Closed loop Regulatory Control (Critical control loops)	Not Recommended
	2	Closed Loop Supervisory Control (Set Point Change, Process Optimization)	Recommended
	3	Open Loop Control (Based on Requirement/ Operator In-Person)	Recommended
Monitoring	4	Event Action/ Sequence based (Based on Event /Small operation task)	Recommended
	5	Uploading/Downloading (Requirement based Task/ Action)	Recommended

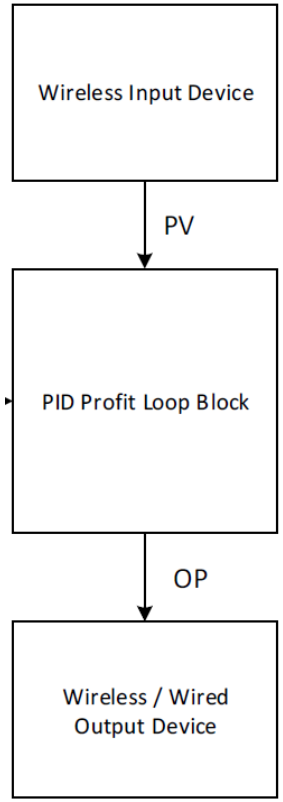

Honeywell

Control over wireless

Topology Example I

4 Seconds or Faster Loops

- Multi HOP network
- Input is Wireless
- Output is Wired

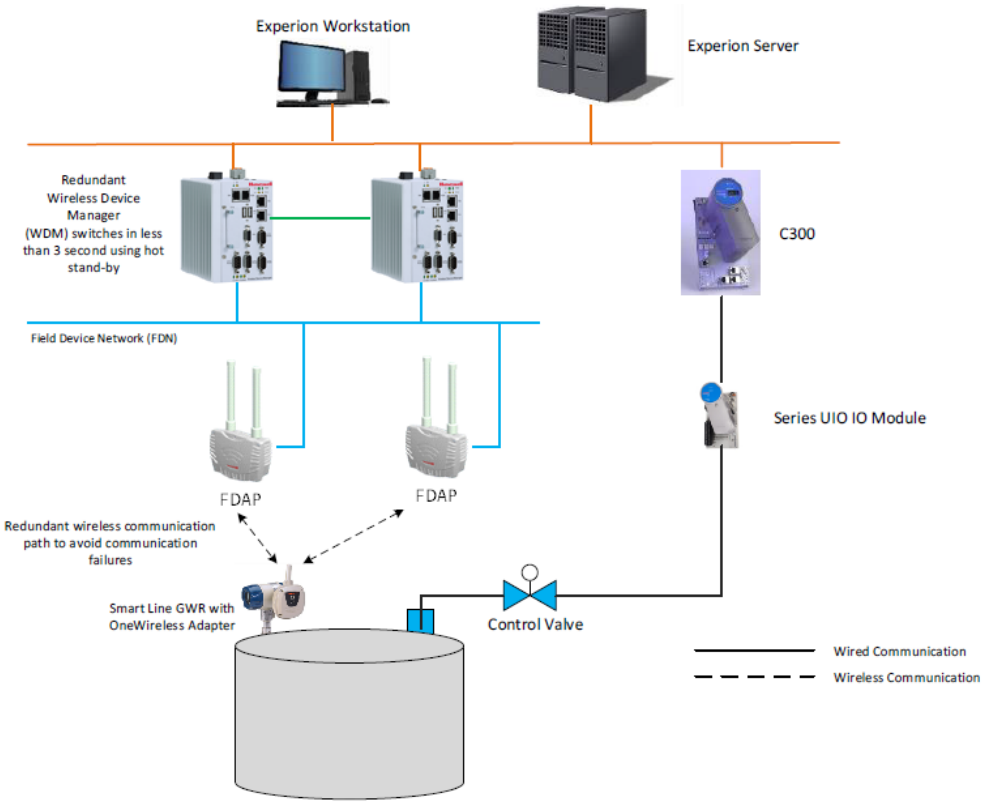

Honeywell

Control over wireless

Topology Example II

1 Second or Faster Loops

- Single HOP network
- Input is Wireless
- Output is Wireless

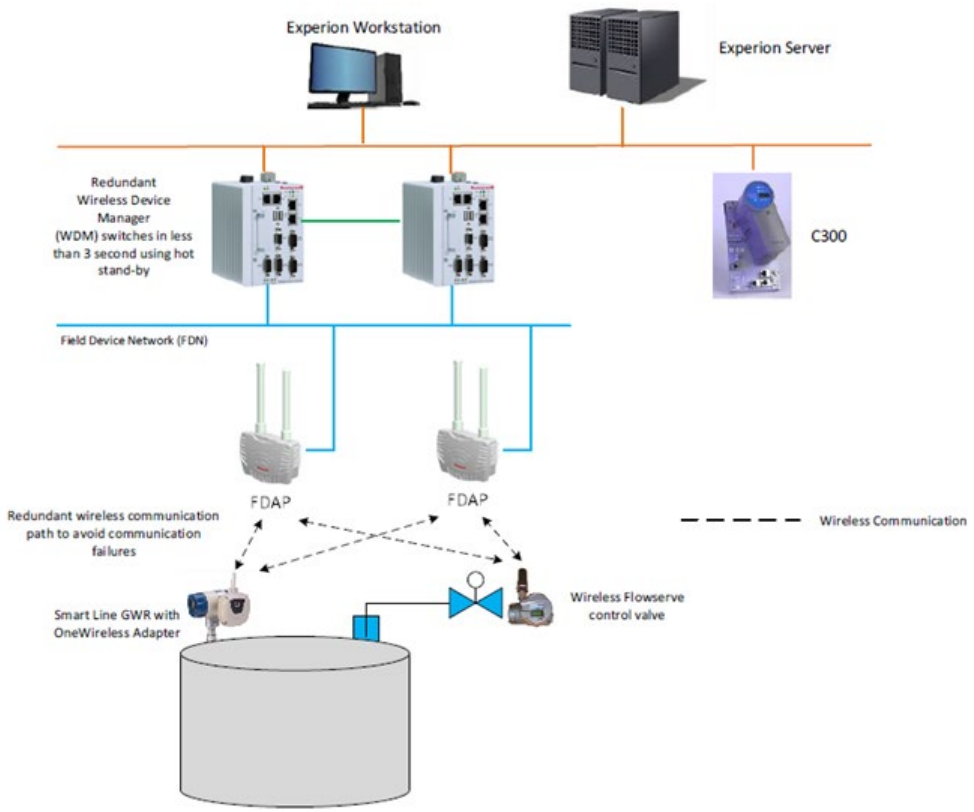

Honeywell

ISA Secure Certified

Industry First!

- Comprehensive, end-to-end integrated security system
  - Confidentiality
  - Data Integrity and Authenticity
  - Source Authentication
  - Protection to Reply Attacks
  - Advanced Key Management Service
  - Wi-Fi data goes to IT via Firewall

- Independently reconfirmed by a comprehensive hackathon
- WDM continuously and automatically logs all modifications, events, and changes
- Log file provides transparent network status end-to-end, offering additional protection and prevention of unwanted events

The manufacturer may use the marks:

Certified Device ISASecure

exida CERTIFIED ISASecure LEVEL 1 CAPABLE

Certification Report:
HPS 1808036 WDM R320
ISASecure Cert Report V1R1
(or later)

Validity:
This Certificate is restricted to the specified version of the referenced Device (including the model number, hardware / firmware / software versions) set forth in this Certificate. Furthermore, the unit shall be operated in a network and operational environment meeting the assumptions in the Certification Report.

Revision 1.0 November 2, 2018

IAF ANSI

ANSI Accredited Program
ISO/IEC 17065
PRODUCT CERTIFICATION BODY
#1004

ISASecure Chartered Laboratory
exida
80 North Main St
Sellersville, PA 18960
License: ISCI-CL0001
ACLASS Cert No: AT-1531

exida

Certificate / Certificat
Zertifikat / 合格証

HPS 1808036 C001

exida hereby confirms that the

Wireless Device Manager

Manufactured by

Honeywell Process Solutions
Phoenix, Arizona
USA

Has been assessed per the relevant requirements of:

ISASecure™ Embedded Device Security Assurance Program
2.0.0

And meets the requirements for:

SECURITY LEVEL 1

Model Number: WDMY

System Software Version: R320

Authorized Representative

Honeywell

Secure Communications - IPsec

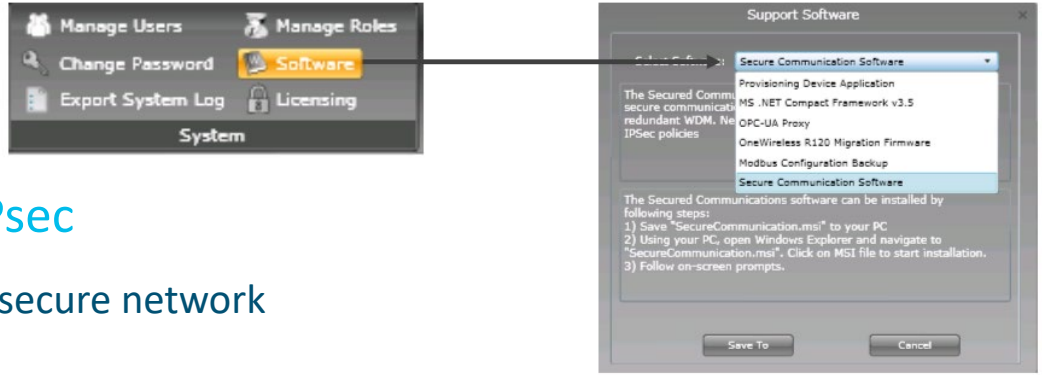

Secure Communication Using IPsec

- Internet Protocol Security (IPsec) is a secure network protocol
- Similar to principle of Virtual private networks (VPNs)
- Authenticates and encrypts packets of data
- IPsec enables secure communication between WDM and Windows node on Process Control Network (PCN) and Special Interface Network (SIN)

Honeywell

Special Interface Network (SIN) Redundancy

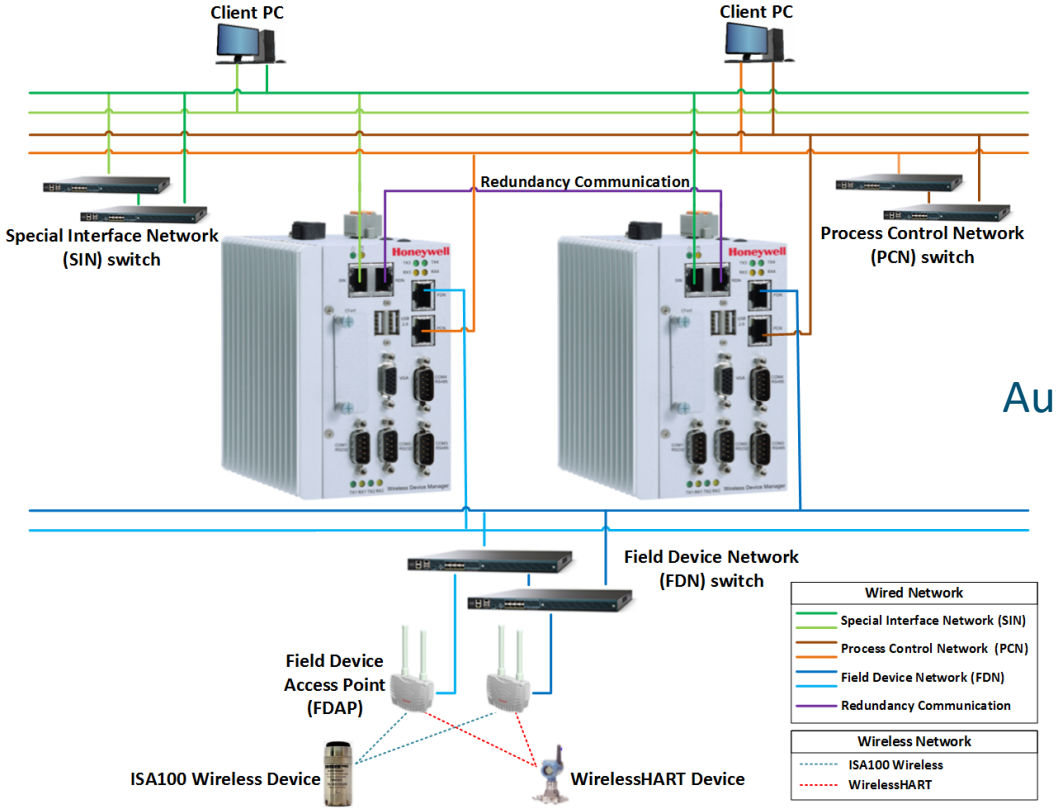

Instant Seamless
Automatic Switchover

Honeywell

WDM Improvements

WDM Redundancy

- Improved redundancy switchover time to <= 4 sec between primary and secondary
- Meets control over wireless application needs

WDM Duplication or Recovery

- Easy process to generate bootable ISO file back-ups
- Enabling easy configuration duplication or recovery by USB back-up

Honeywell

OneWireless – Virtual WDM

Virtual Wireless Device Manage (vWDM)

- Provides highly scalable OneWireless solution
- vWDM can support up to 3000 devices
    - Single vWDM = 6 WDMY
- Capacity managed via 500-device bundles
- Increased WDM OPC performance
- Hardware options for vWDM
    - Purchase virtual appliance hosts from Honeywell
    - Source hardware based on recommended specs
    - Leverage existing virtual host capacity
- Single Sign-On (SSO) to manage network of up to 3000 wireless IO

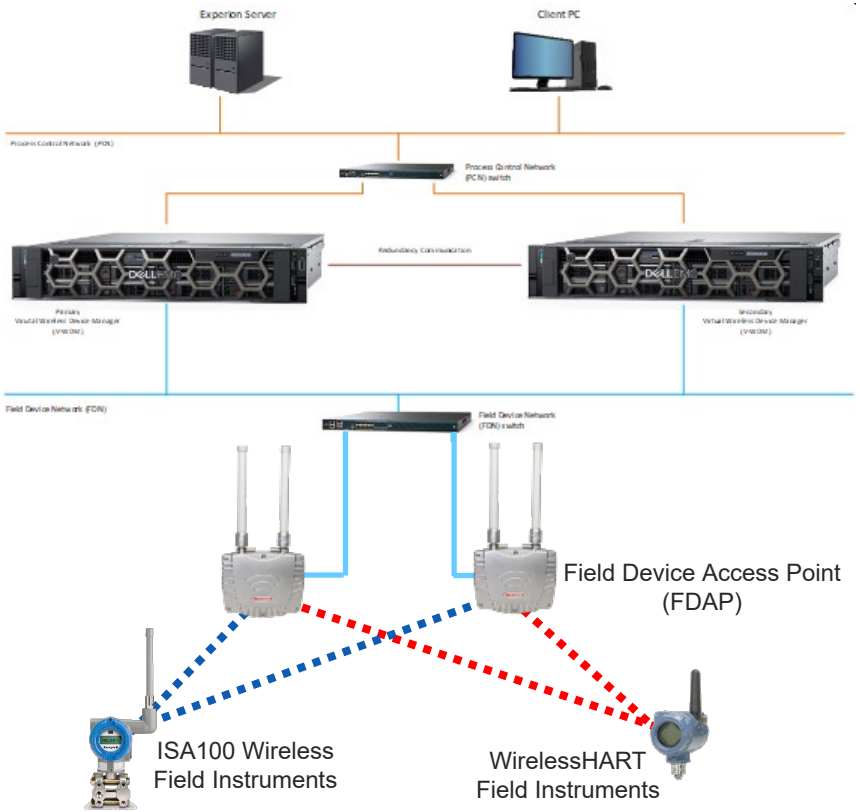

Honeywell

Cisco and Honeywell Multi-protocol Wireless

Honeywell OneWireless versus sensor mesh network

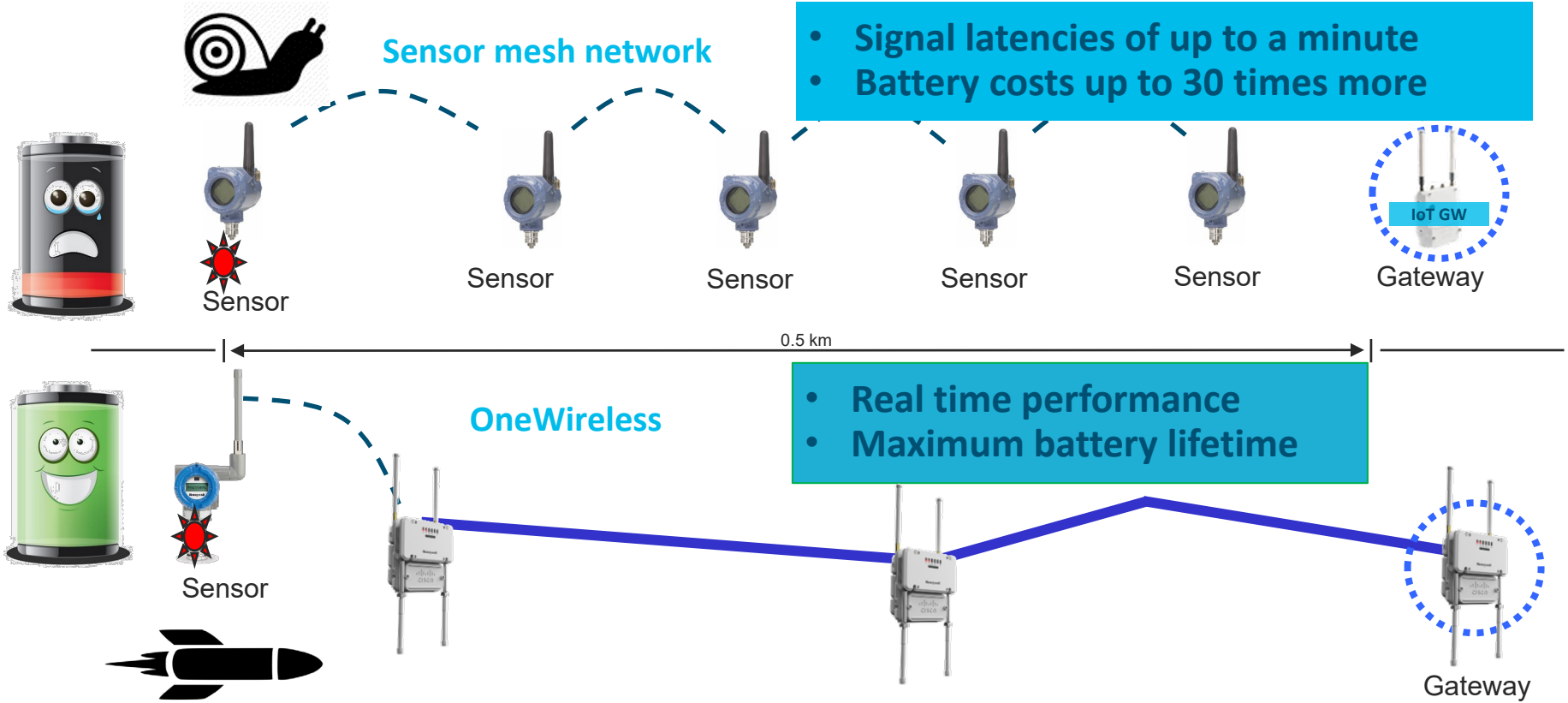

Different solution …… Different performance

Honeywell

OneWireless (v)WDM, FDAP plus IW6300

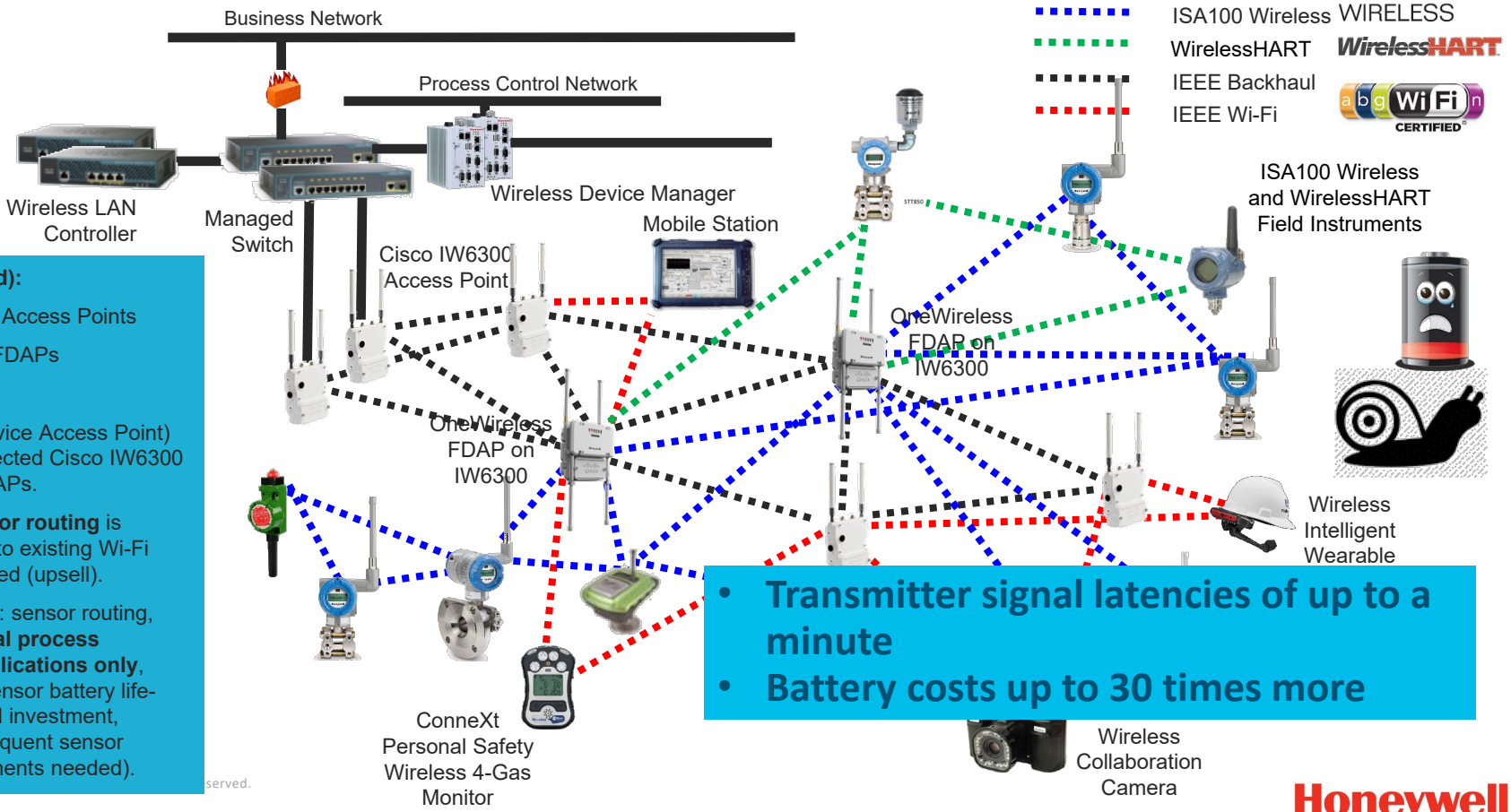

BOM (simplified):

7 Cisco IW6300 Access Points

2 OneWireless FDAPs

2 (v)WDM

FDAP (Field Device Access Point) mounted on selected Cisco IW6300 industrial Wi-Fi APs.

Scenario: **Sensor routing** is allowed, retrofit to existing Wi-Fi network supported (upsell).

Characteristics: sensor routing, **non-time-critical process monitoring applications only**, compromised sensor battery life-time, lower initial investment, **higher TCO** (frequent sensor battery replacements needed).

- **Transmitter signal latencies of up to a minute**
- **Battery costs up to 30 times more**

Honeywell

OneWireless (v)WDM and PCAP

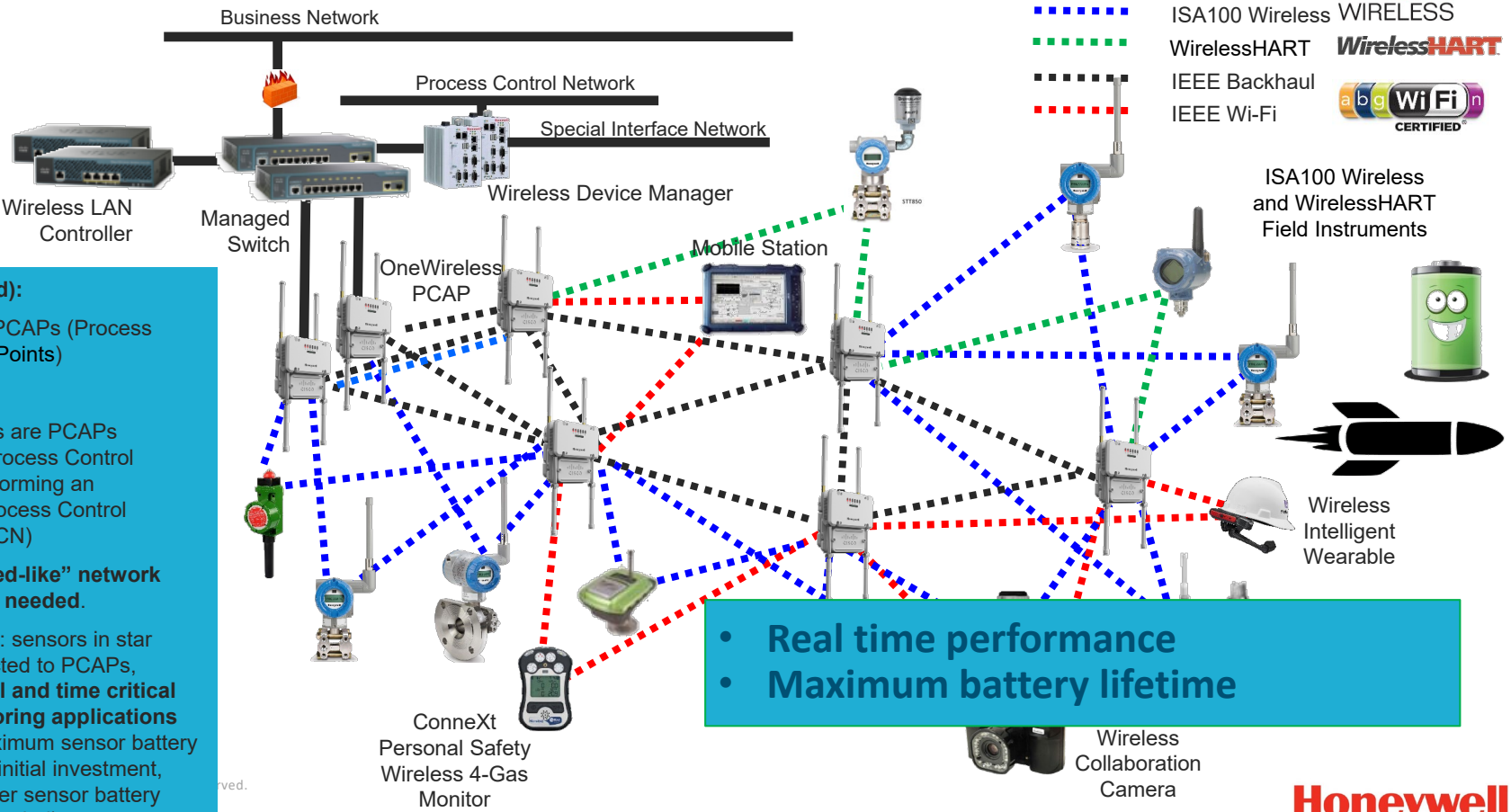

BOM (simplified):

7 OneWireless PCAPs (Process Control Access Points)

2 (v)WDM

All access points are PCAPs (OneWireless Process Control Access Points) forming an OneWireless Process Control Network (OW PCN)

Scenario: **"Wired-like" network performance is needed**.

Characteristics: sensors in star topology connected to PCAPs, **process control and time critical process monitoring applications supported**, maximum sensor battery life-time, higher initial investment, **lower TCO** (fewer sensor battery replacements needed).

- **Real time performance**
- **Maximum battery lifetime**

Honeywell

OneWireless Market Comparison

Honeywell OneWireless Network

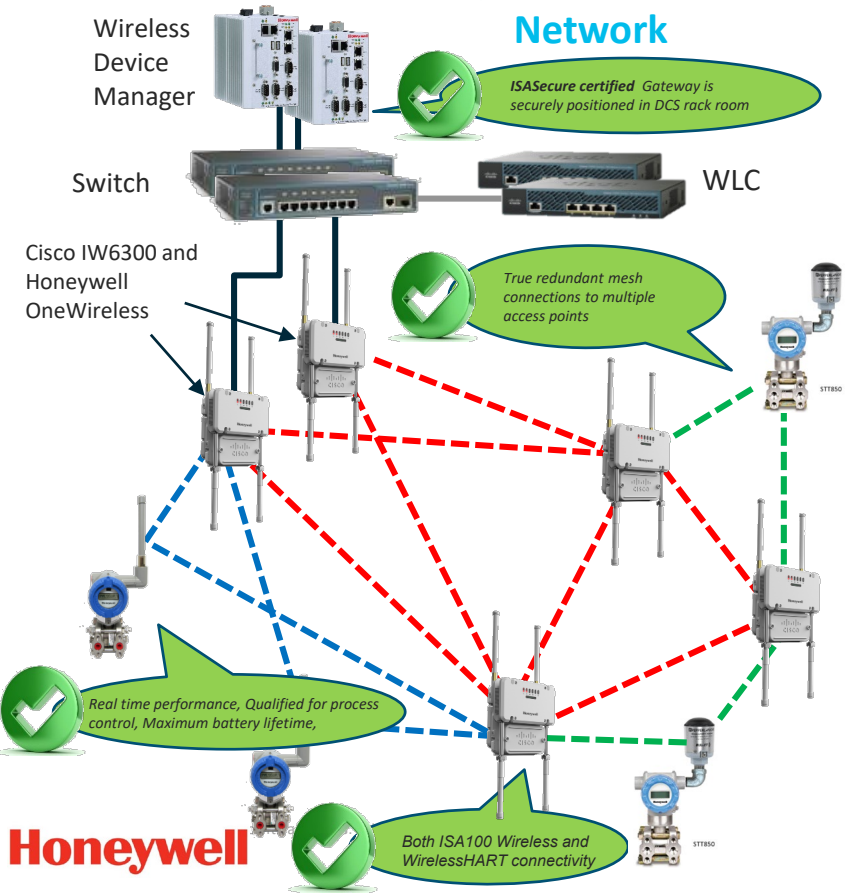

Alternative Solution

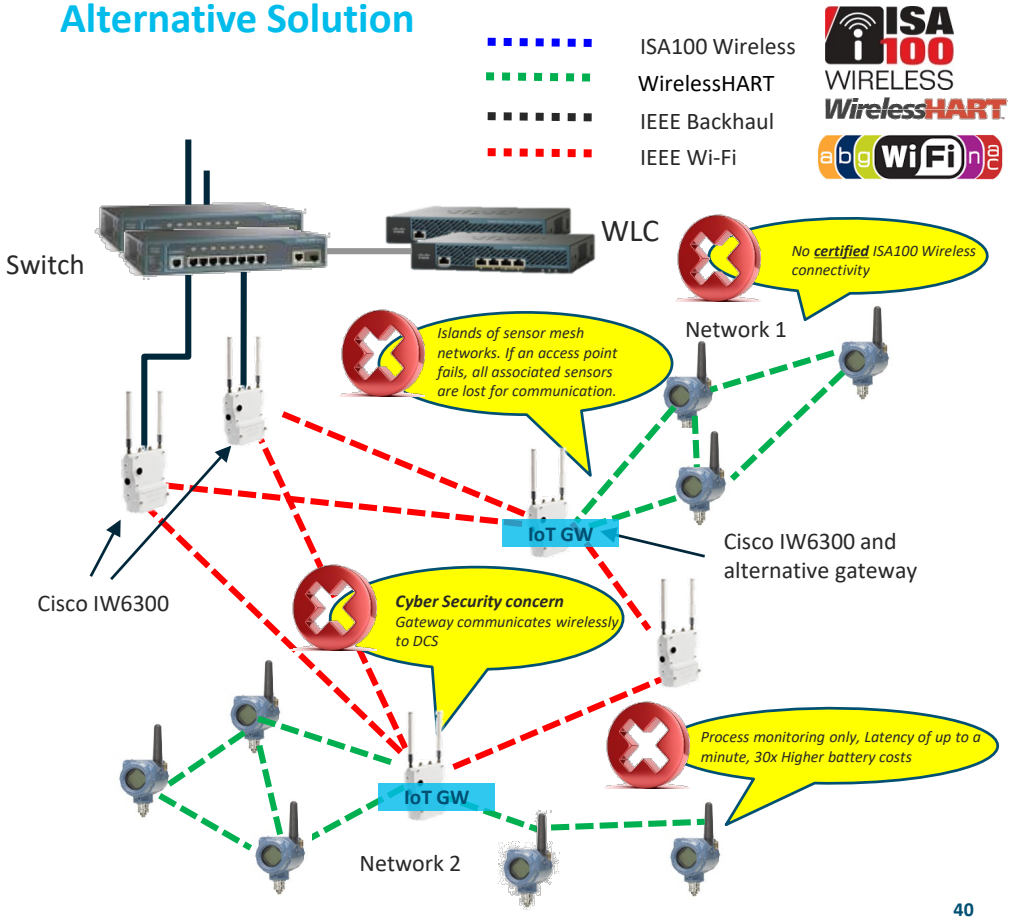

Honeywell

Honeywell OneWireless Market Comparison

	Honeywell OneWireless	Alternative solutions
• Certified ISA100 Wireless connectivity	✓	✗
• Field Expandable Wireless IO (FEWIO)	✓	✗
• Special Interface Network (SIN)	✓	✗
• SIN Redundancy	✓	✗
• Control over wireless qualified	✓	✗
• Wired-like network response times	✓	✗
• ISASecure Level 1 Certification	✓	✗
• IPsec Secure Communications	✓	✗
• Up to 3000 Wireless IO in one network - vWDM	✓	✗
• Single Sign-On (SSO)	✓	✗
• Truly end to end redundant	✓	✗

Cisco and Honeywell Use-Case Examples

Reduce Resources – Time and People

Challenges	• Mobile computing and CCTV required during the startup and commissioning phases. • Constraints on the weight and footprint of the solution due to offshore platform. • Tracking personnel movement
Solution	• Platform wide OneWireless network OneWireless Network • 35 Marine grade access points • ISA100 Wireless transmitters • Wi-Fi connected personal safety tracking devices • Haz Loc Certified Wi-Fi tablets
Results	• Reduced number of personnel required on the platform • Increased efficiency by remote collaboration enabled by wireless and mobility • Best in class Personal Safety • Reduced the commissioning, startup and troubleshooting time.

NOC in Scandinavia

“Digital Transformation Offshore driven by Cisco Honeywell OneWireless Network”

Personnel Safety - Reduce Response Time

NOC in Middle East

Challenges	• Safeguard personnel from sour gas leak • Identify the location of personnel in case of a gas leak event / man down situation • Early detection of smallest gas leak • Automated calibration and bump testing of gas detectors
Solution	• Site wide OneWireless network OneWireless Network • Wi-Fi connected personal gas detectors • Honeywell ConneXt Loneworker • Active Worker Personal Gas Safety Solution
Results	• Risk level brought under acceptable limits • Emergency responds without any delay • Immediate location identification of incident • 2-way communication with personnel in the field

"Cisco Honeywell OneWireless enabling Personal Safety to Highest Levels"

Summary

Summary

Cisco plus Honeywell OneWireless Multiprotocol Network and Solutions

- Solve problems at half the costs relative to traditional wiring
- Wireless OT applications typically have an under 1 year ROI
- Quickest installation time - data in just 1 day

- Largest portfolio of Wireless devices by multiple vendors
- Unmatched flexibility and freedom of choice

- Cyber Secure in every aspect – ISA Secure Certified
- Truly end to end redundant
- Scalable to thousands of wireless IO for monitoring and process control

! Have your projects benefit from Cisco and Honeywell OneWireless !

Honeywell

For Your Attention

Contact us to discuss your specific business needs

Dan Holme

Systems Architect
Global Industry Partners
Cisco

dholme@cisco.com
www.cisco.com

Diederik Mols

Business Director
Industrial Wireless Solutions
Honeywell

Chairman of the Board
ISA100 Wireless Compliance Institute

diederik.mols@honeywell.com
www.honeywell.com

Follow up with us!

Speaker details:

Dan Holme (dholme@cisco.com)

Diederik Mols (diederik.mols@honeywell.com)

Cisco Industrial Wireless:

https://www.cisco.com/c/en/us/products/wireless/outdoor-wireless/index.html

Cisco Oil & Gas Portfolio Explorer:

https://www.cisco.com/c/m/en_us/solutions/industries/portfolio-explorer/portfolio-explorer-for-oil-and-gas.html

Honeywell OneWireless:

https://www.honeywellprocess.com/en-US/explore/products/wireless/OneWireless-Network/Pages/default.aspx

CISCO