Cisco IT Executive Presentation
Core Routing and Switching

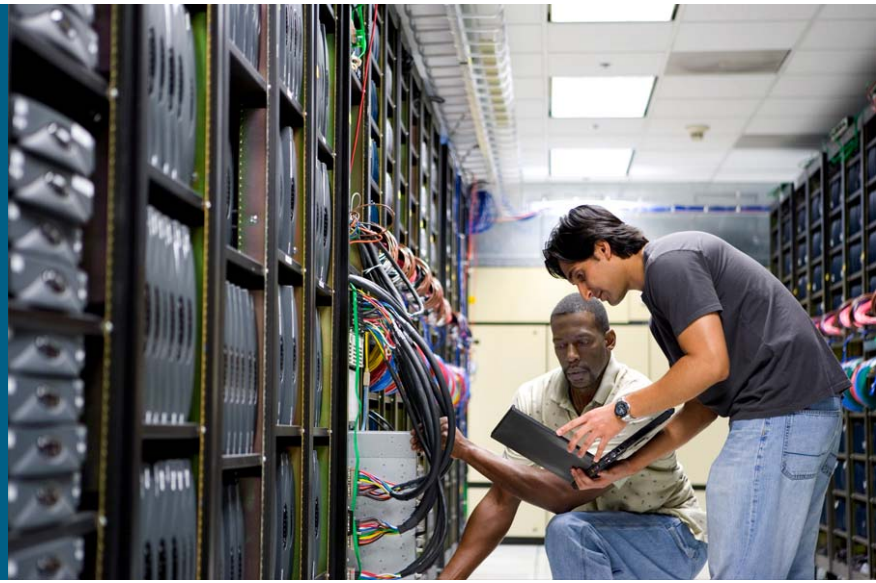

Version 13, Q3, FY09

Produced by the Cisco on Cisco team within Cisco IT

Executive Summary
Cisco All Packet Summary

- Core Switch: Cisco Catalyst 6500 Series Switch
- Edge Switches: Cisco Catalyst 6500, 3750G Series Switches
- Access Switch: Cisco 6500, 4900 and 3750E Series Routers

- Core Router: Cisco Catalyst 6500 Series Router
- Edge: Cisco 3845 Integrated Services Router
- Edge: Cisco 3845 Multiservice Platform
- Edge: Cisco 3800 and 6500 Series Routers
- Console Server: Cisco 2800 and 3800 Series Routers

- WAN Access : Cisco 7200/7600 Series Router
- OC-48/STM-16
- OC-12/STM-4
- OC-3/STM-1
- DS-3 WAN backbone

- ISP Router: Cisco 12400 and 7200 Series Router
- Service provider IP VPN network in Europe and emerging markets
- OC-192 rings on large campus LANs

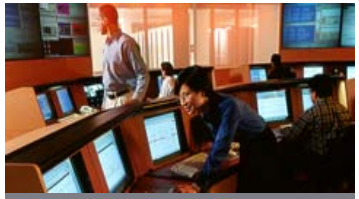

- 14 production / customer facing data centers
- Data Center - Nexus

Cisco Data Centers

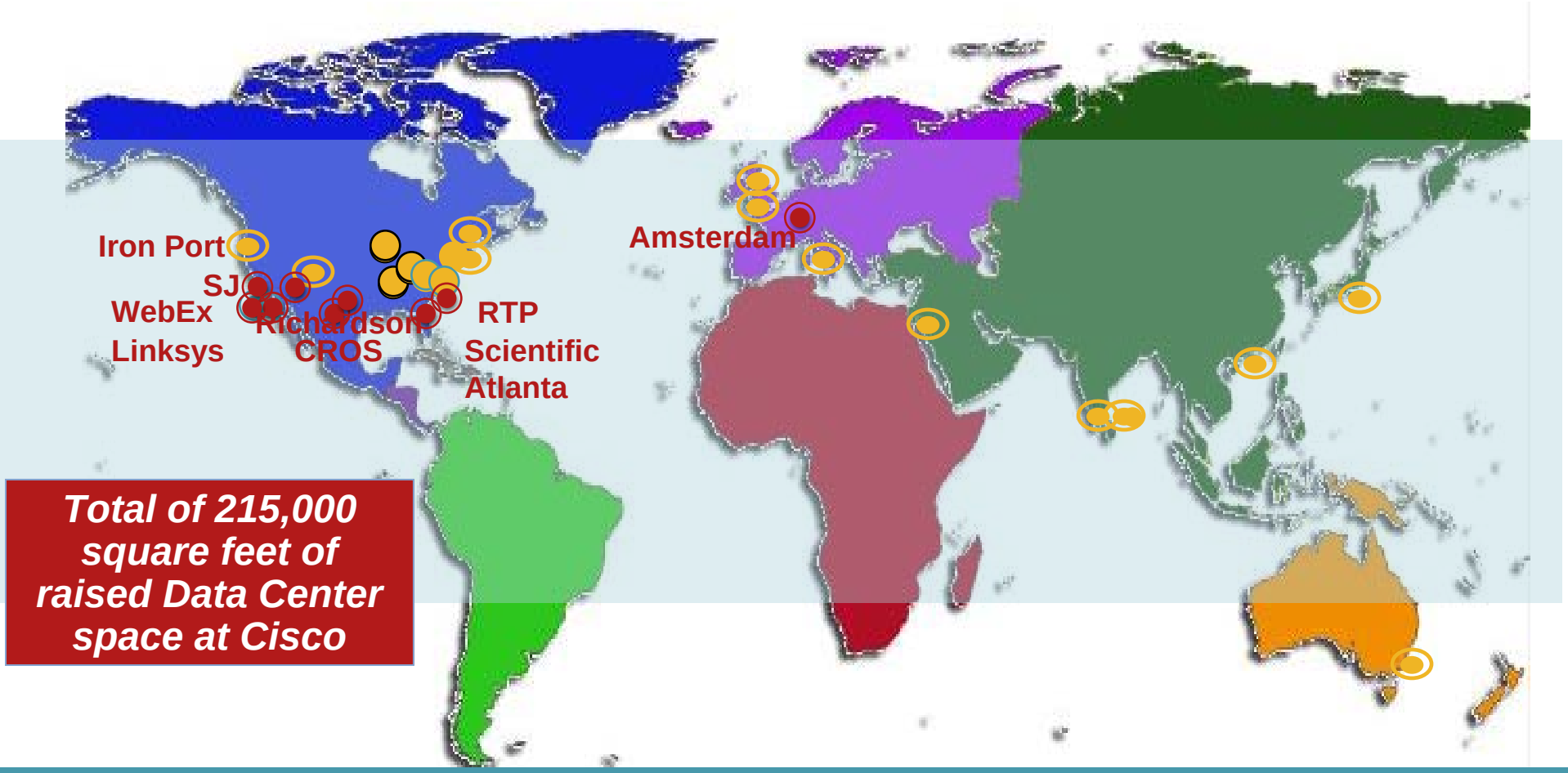

Total of 215,000 square feet of raised Data Center space at Cisco

Data Centers | **Business Data Center** | **Engineering R&D Data Center**

Latency Data Points between Data Center Locations

Primary DC locations:

- San Jose (SJC) <-> Research Triangle Park (RTP5): **85 ms**
- San Jose (SJC) <-> Mountain View (MTV5): **2 ms**
- San Jose (SJC) <-> Richardson (RCDN9): **53 ms**
- Research Triangle Park (RTP5) <-> Richardson (RCDN9): **40 ms**
- Richardson (RCDN9) <-> Richardson 2nd DC (new): not-to-exceed **1-2 ms**

Latency to different continents:

- San Jose (SJC) <-> Bangalore (BGL11): **240 ms**
- San Jose (SJC) <-> Amsterdam (AMS3): **172 ms**
- Richardson (RCDN9) <-> Bangalore (BGL11): **292 ms**
- Richardson (RCDN9) <-> Amsterdam (AMS3): **128 ms**

Remote office latency extremes:

- San Jose (SJC) <-> Saudi Arabai (JED01): **400 ms**
- San Jose (SJC) <-> Nairobi (NBO03): **740 ms**

Campus

- Gigabit Ethernet and 10 Gigabit Ethernet in campus core; 10/100/1000, Gigabit Ethernet to desktop
- Cisco Catalyst 6500 Series as an edge–to–core platform using both switching and routing capability
- Campus network design uses duplexed equipment and circuits to avoid single point of failure

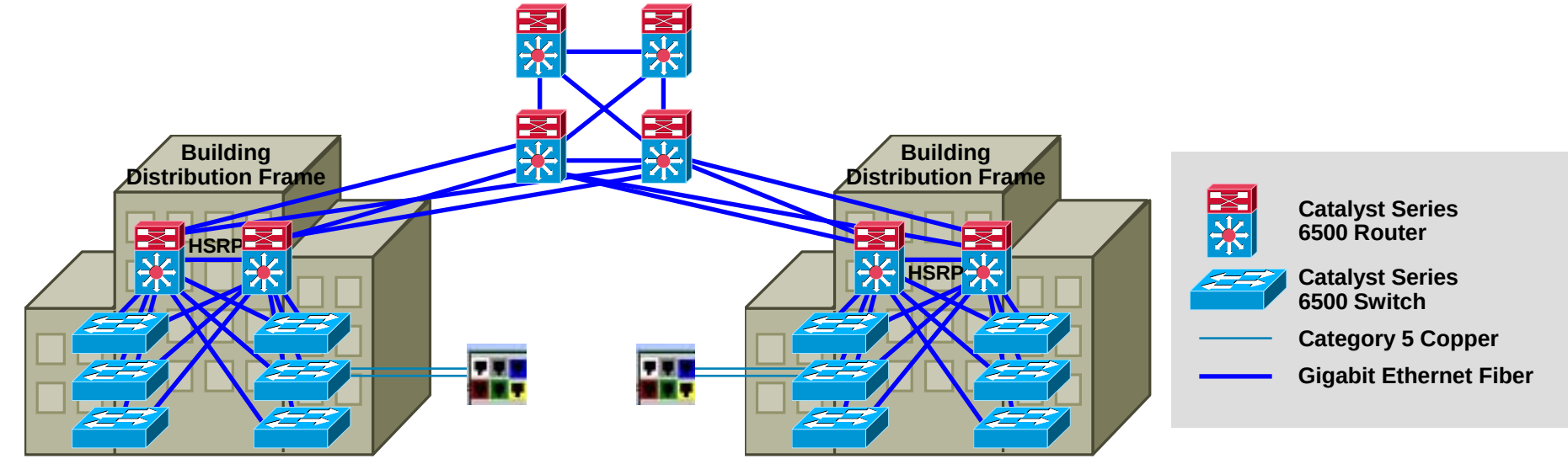

Intermediate Distribution Frames

Intermediate Distribution Frames

Cisco Global WAN 2008

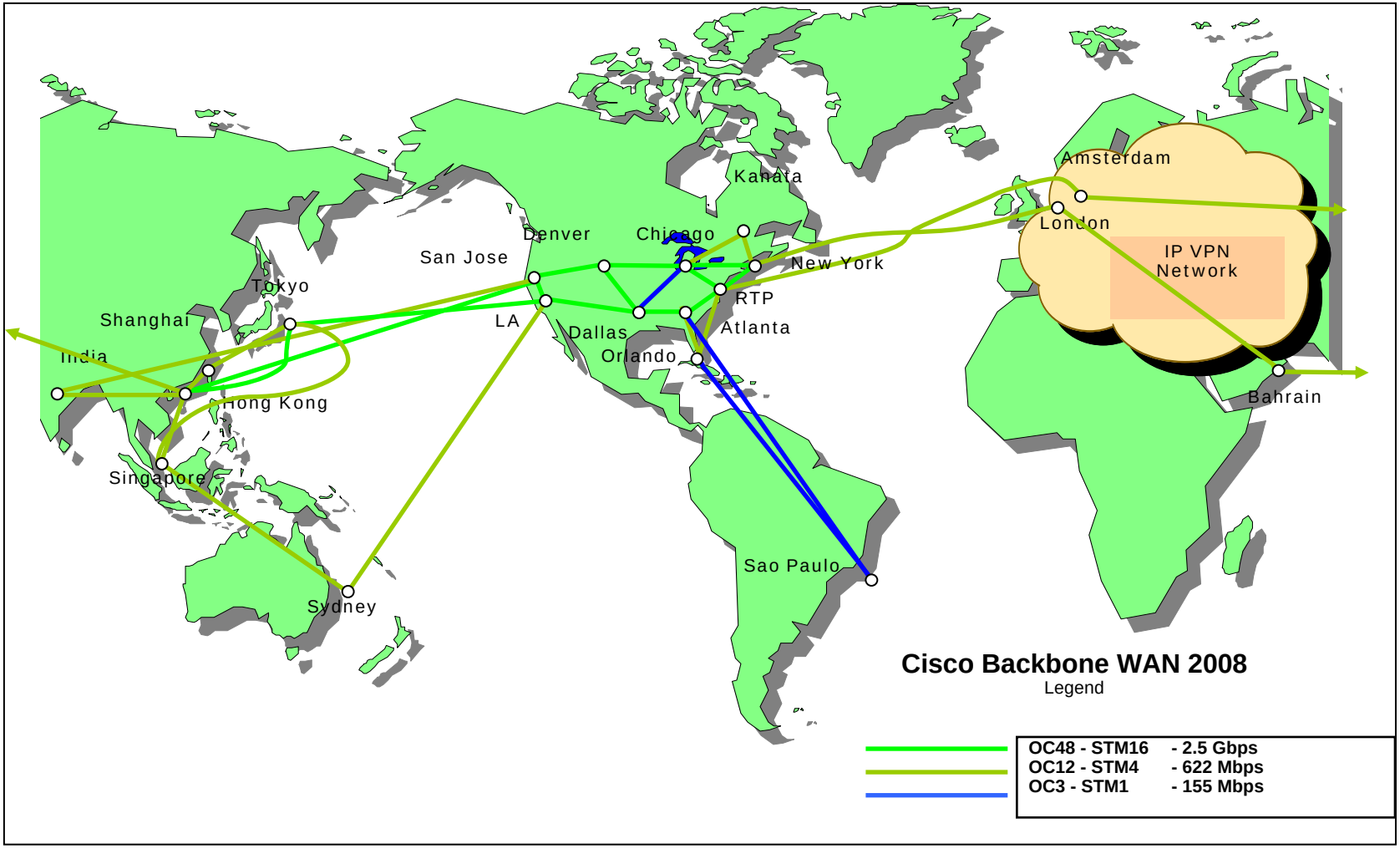

Europe and Emerging Markets Intelligent Network Infrastructure

Transport

- Any-to-any
- Provides security, QOS, multicast, and resiliency

Services

- Enables voice, video, and peering applications
- Access to new services—IP—PSTN, Internet

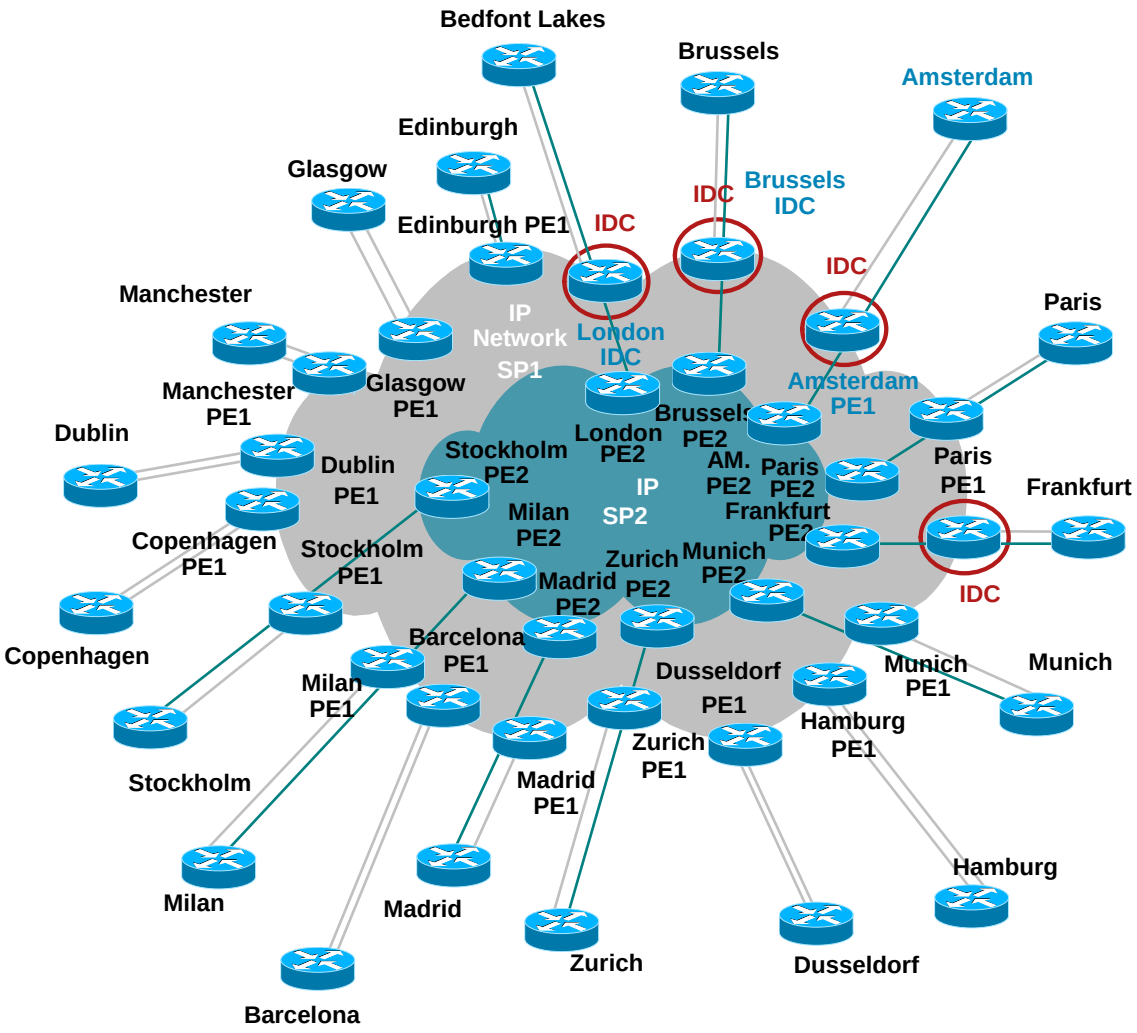

Routing and Switching – Past, Present and Future

Past	Present	Future
• Spoke-and-hub WAN architecture • Beginning of IP convergence • All-PBX infrastructure • Early WLAN deployment • Limited storage network	• Converged voice, video, and data network • Bandwidth upgrades and Equipment upgrades to support 456 TelePresence sites • WAAS/ACNS at every site • AVS/ACE at every data center • Network as a platform for enabling globalization, collaboration and virtualization	•Nexus deployed for 10 gig I/O consolidation

Core Routing & Switching – Business Value Snapshot

Productivity

- Latency minimized through “shortest path” any-to-any topology, enhancing end-user experience

Quality/End User Experience

- IP VPN = 1 connection to network providing flexible office adds and moves

Cost Savings/Avoidance

- IP VPN = 4X bandwidth at no extra cost
- International VoIP calling
- Overall cost reduction of 23% through modernized IP network
- Highly adaptive routing and switching with high-value software platform optimize long-term network business value and cost-effectively manage growth

To learn more about real-world Cisco IT deployments, visit www.cisco.com/go/ciscoit