QoS for IP Voice and Video

How Cisco IT Uses QoS for Critical Applications

A Cisco on Cisco Case Study: Inside Cisco IT

Overview

- Challenge

  New applications require special data handling – especially voice and video

- Solution

  Standards of classification, QoS, and QoS management in both LAN and WAN

  Low Latency Queuing (LLQ) and Class Based Weighted Fair Queuing (CBWFQ)

- Results

  QoS provides better quality, better traffic handling during congestion

- Next Steps

  Expanding QoS use in network – to VPN, labs, MPLS, SAN, and more

Challenge - New Applications Require Special Data Handling

- Previous IP networks sent data that (mostly) tolerated delay
- New applications have new QoS requirements
  - IP voice is sensitive to latency, jitter, packet drops
  - IP video is sensitive to latency, packet drops
- Added bandwidth demands can overrun links
  - When larger or more input pipes meet smaller or fewer output pipes

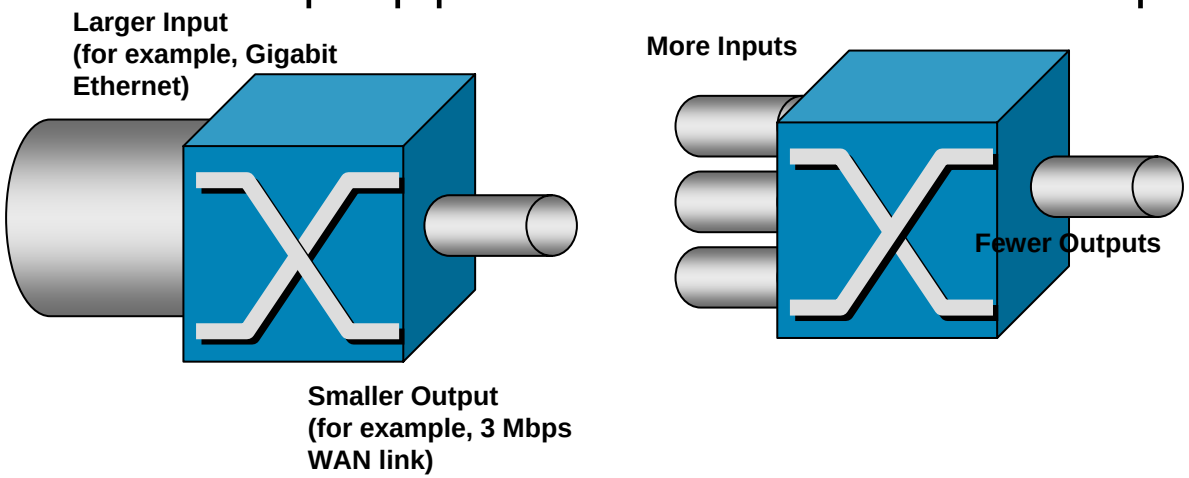

Challenge - New Applications Require Special Data Handling (Contd.)

- QoS can be applied incrementally, but is much easier to manage if applied as a standard

Solution - Standards of Classification, QoS, and QoS Management

- Classification of services: Separating voice, video, and special data applications
- Marking services at a trusted edge: Marking traffic as close to the device as possible (IP phone, video camera, application server)
- CBWFQ: Guarantees a minimum amount of bandwidth during congestion based upon the service class marks
- LLQ: Provides a priority queue for voice, which pushes all voice packets to the front of the queue, ensuring that voice packets aren't stuck behind larger data packets
- NBAR: Recognizes special application traffic and classifies that traffic appropriately

Class-Based WFQ - QoS Guarantees Plus Bandwidth Efficiency

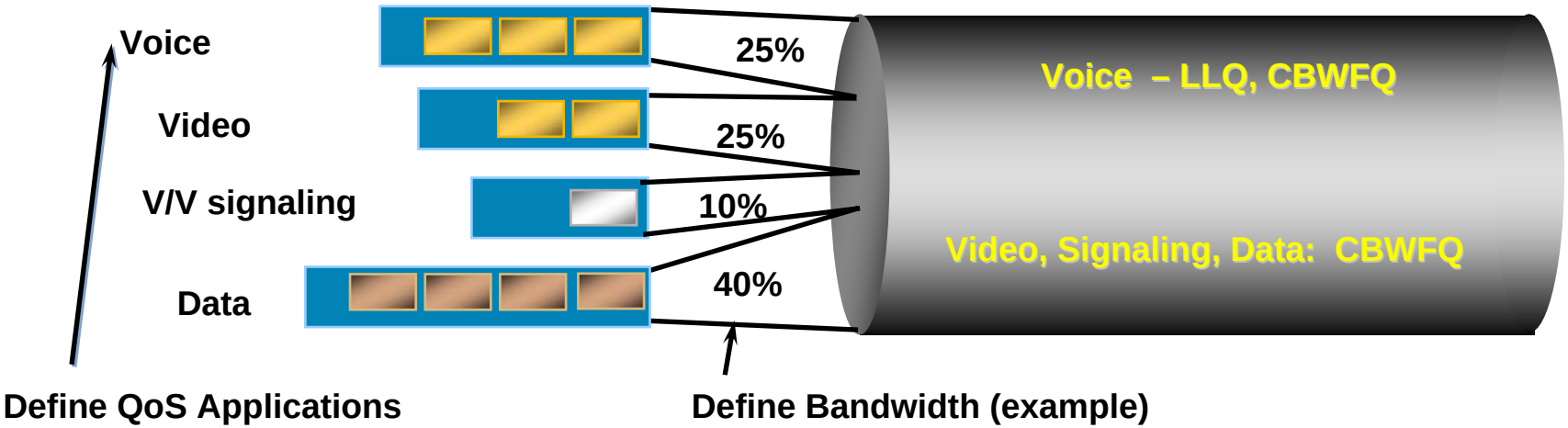

- Buffering (LLQ) controls latency for voice
- Weights (CBWFQ) guarantee minimum bandwidth
- Bandwidth percentage allocation defined according to link size
- Unused capacity is shared among the other three classes

Class-Based WFQ - QoS Guarantees Plus Bandwidth Efficiency (Contd.)

- Each queue is separately configured for QoS
- Benefits
  - Minimum latency for voice traffic
  - Class of service SLAs supported for all data classes
  - No wasted bandwidth

Low Latency Queuing (LLQ) for Voice

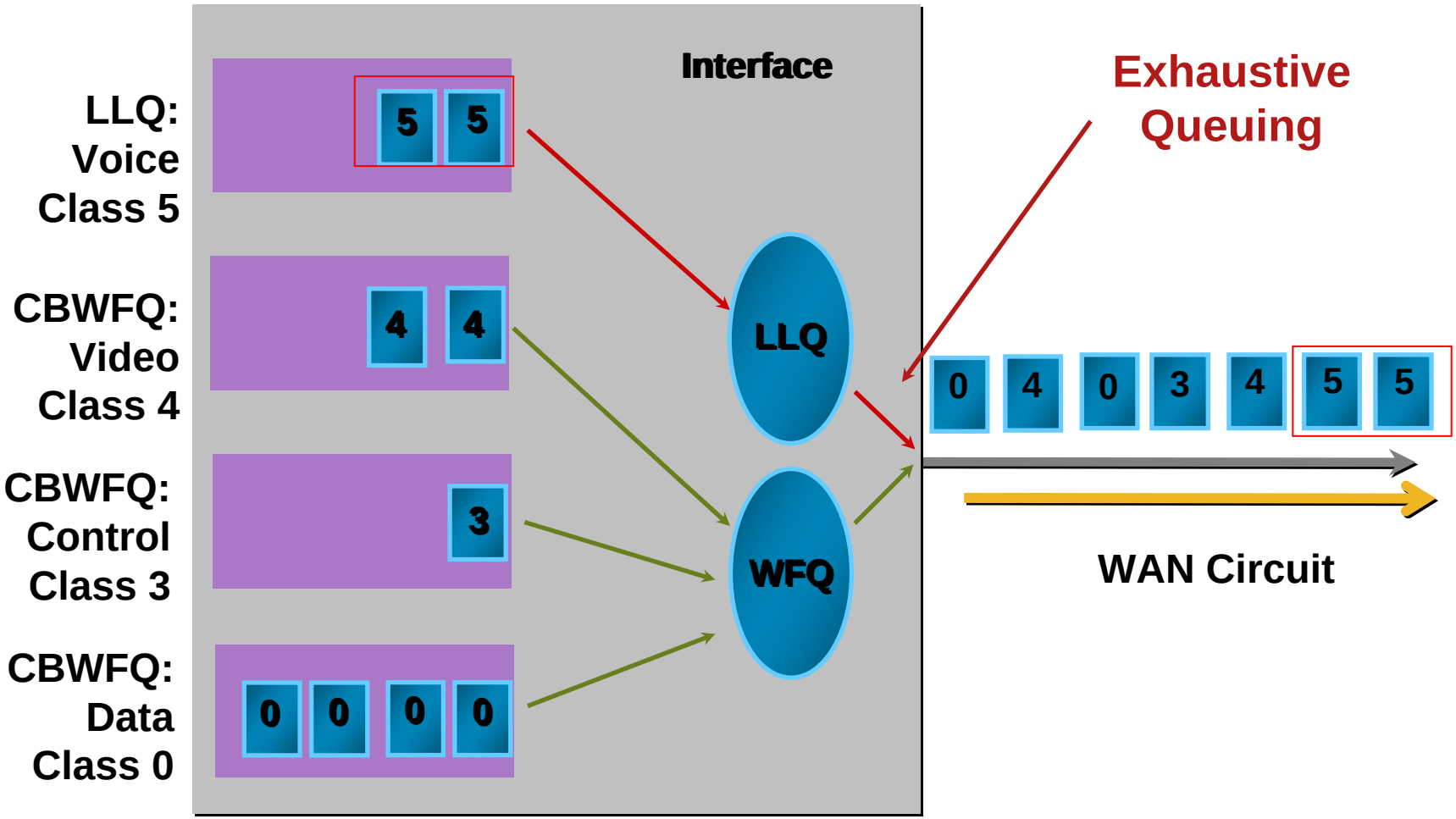

Cisco IT Classes of Service

Service Class	Service
Class 6	Network control traffic among switches and routers
Class 5	IP voice traffic (with LLQ)
Class 4	IP video traffic
Class 3	Voice and video signaling traffic
Class 2	Reserved for future use
Class 1	Low priority (scavenger class) traffic
Class 0	Default data traffic

LAN and WAN QoS

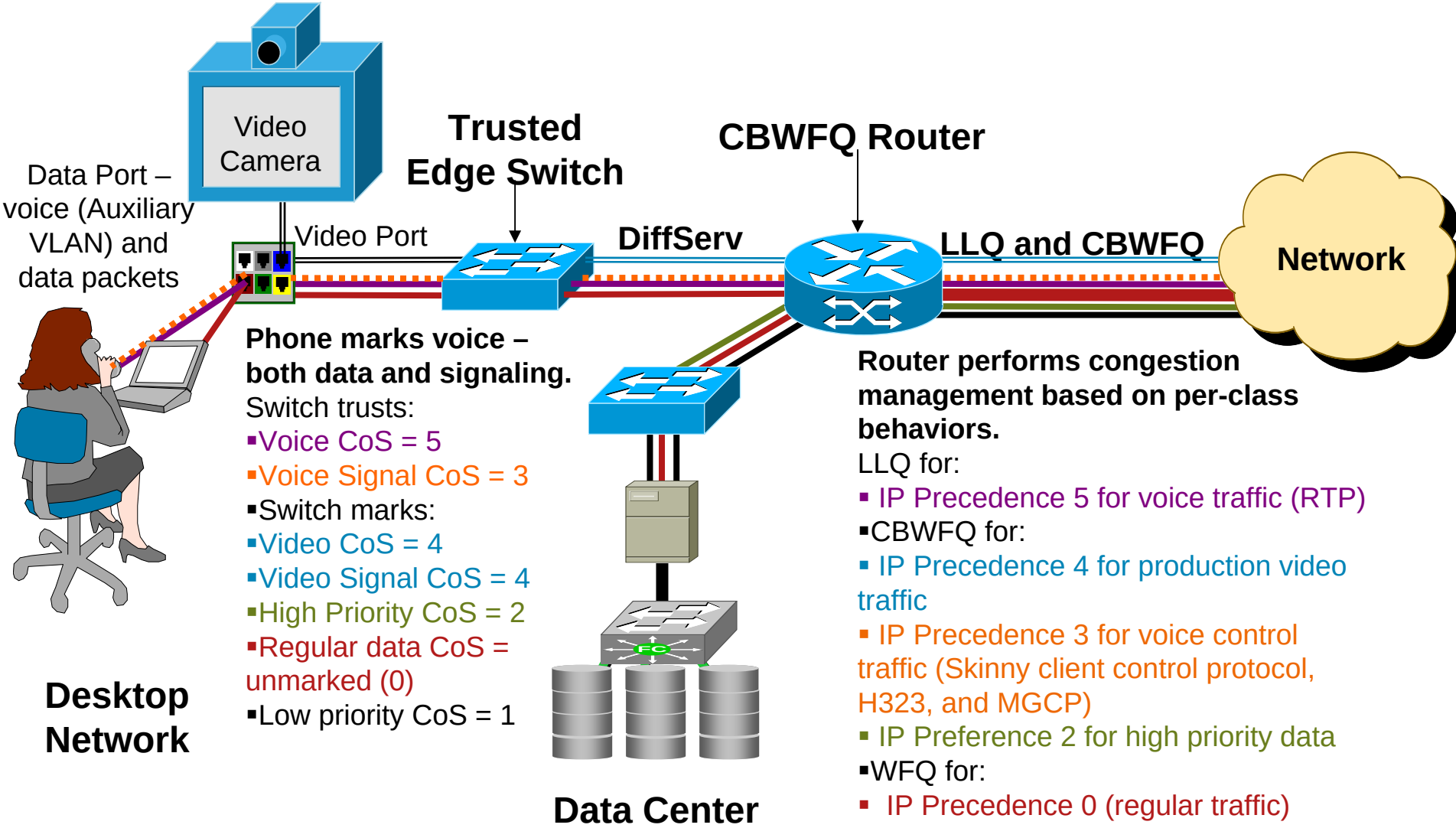

Results - QoS Provides Better Quality

- Users hear better voice quality
  - Voice packets given priority
- The network handles congestion gracefully
  - Less important traffic is dropped first

Next Steps - Expanding QoS Use in Network

- Lab traffic with QoS needs: Labs are not trusted traffic sources, but may need QoS
- IP voice over VPN: Home office users starting to need QoS over the Internet
- QoS over MPLS VPN: Service providers handle and bill for varying classes of service differently
- Call admission control: Gatekeeper handling of oversubscription needs to know the network topology

Next Steps - Expanding QoS Use in Network (Contd.)

- Desktop trusted edge: Cisco IT is migrating trusted edge to desktop to support desktop videoconferencing
- Storage networking: Cisco IT is beginning to put very high volume SAN traffic across the LAN, and is studying how best to use QoS to support SAN and other traffic needs during congestion

To read the entire case study, or for additional Cisco IT case studies on a variety of business solutions, visit Cisco on Cisco: Inside Cisco IT
www.cisco.com/go/ciscoit

Americas Headquarters
Cisco Systems, Inc.
170 West Tasman Drive
San Jose, CA 95134-1706
USA
www.cisco.com
Tel: 408 526-4000
800 553-NETS (6387)
Fax: 408 527-0883

Asia Pacific Headquarters
Cisco Systems, Inc.
168 Robinson Road
#28-01 Capital Tower
Singapore 068912
www.cisco.com
Tel: +65 6317 7777
Fax: +65 6317 7799

Europe Headquarters
Cisco Systems International BV
Haarlerbergpark
Haarlerbergweg 13-19
1101 CH Amsterdam
The Netherlands
www-europe.cisco.com
Tel: +31 0 800 020 0791
Fax: +31 0 20 357 1100

Cisco has more than 200 offices worldwide. Addresses, phone numbers, and fax numbers are listed on the Cisco Website at **www.cisco.com/go/offices.**