Network-Based Intrusion Prevention System (IPS)

Cisco Protects Data Center Assets

A Cisco on Cisco Case Study: Inside Cisco IT

Overview

- Challenge
  - Protect data center assets
- Solution
  - Deploy network-based Intrusion Prevention System (IPS)
  - Augment existing perimeter-based IPS
- Results
  - Early detection and mitigation of data center threats

Challenge

Protect Data Center Assets

- Monitor Cisco network for threats

  Insider threat, unauthorized access to data center assets, policy violations, botnets, more

  Malicious activity can originate outside or inside the company

- Perimeter-based IPS detects threats traveling across the network perimeter

  Deployed in the Cisco DMZ and at service provider points of presence

- But perimeter-based IPS does not provide visibility into events **inside** Cisco data centers

  And that is where the company's most valuable assets reside

“In 2002, a typical threat involved 1000 computers launching a concerted attack on one server. Today, a larger concern is preventing a hacker from quietly gaining access to our data.”

Member of the CSIRT Team

Cisco

Solution

Network-Based IPS Deployment

- CSIRT deployed IPS sensors in Cisco data centers, engineering server rooms, and offshore development centers
  - Augmented perimeter-based IPS
- Solution involves monitoring and analysis, investigation, tuning and custom signatures, and deployment
  - Tuning reduces false positives while not generating false negatives
  - CSIRT continually develops custom signatures for threats specific to the Cisco network

Solution

Design for Large Data Centers: >600Mbps Bandwidth

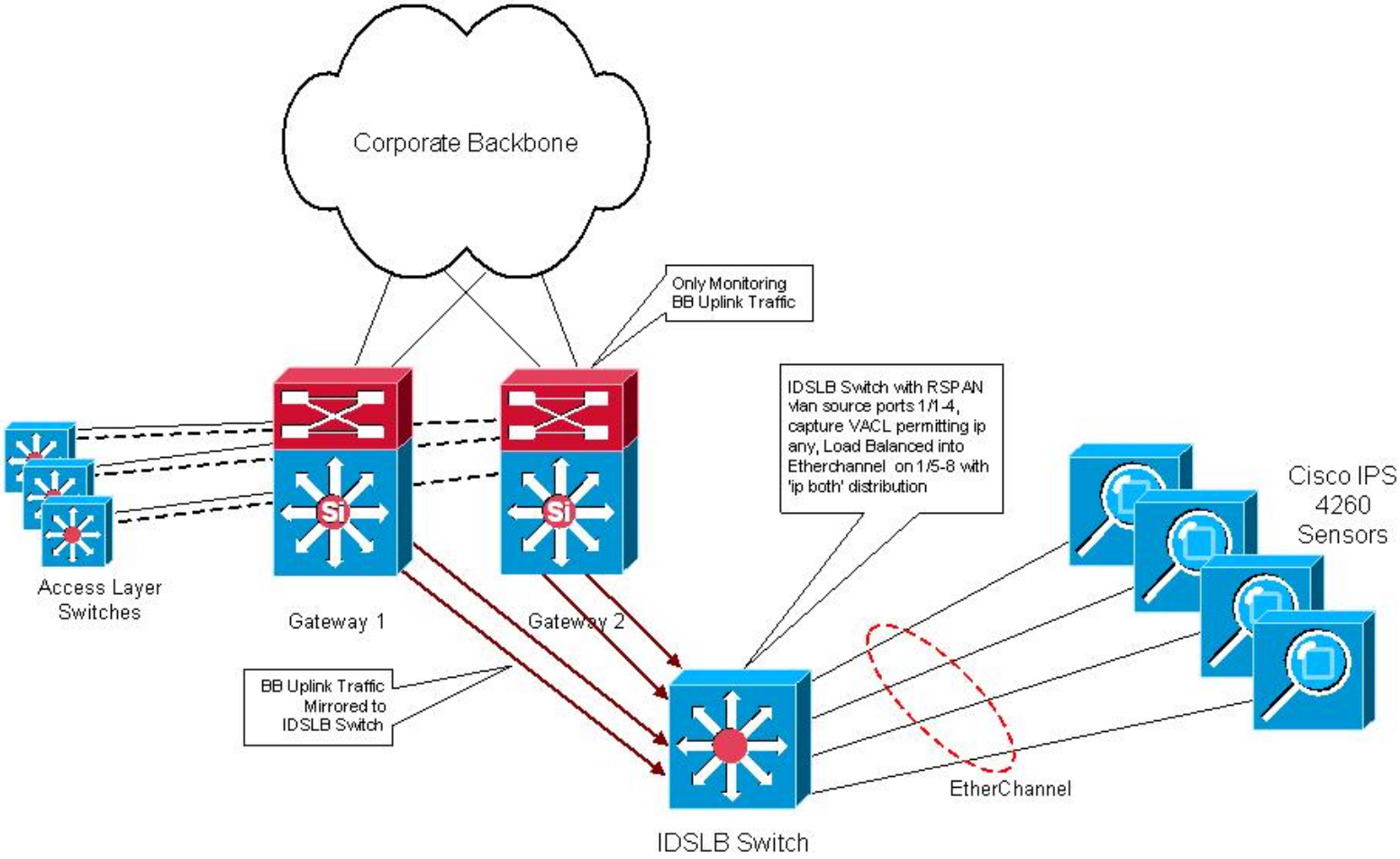

Solution

Design for Small Data Centers: <600 Mbps Bandwidth

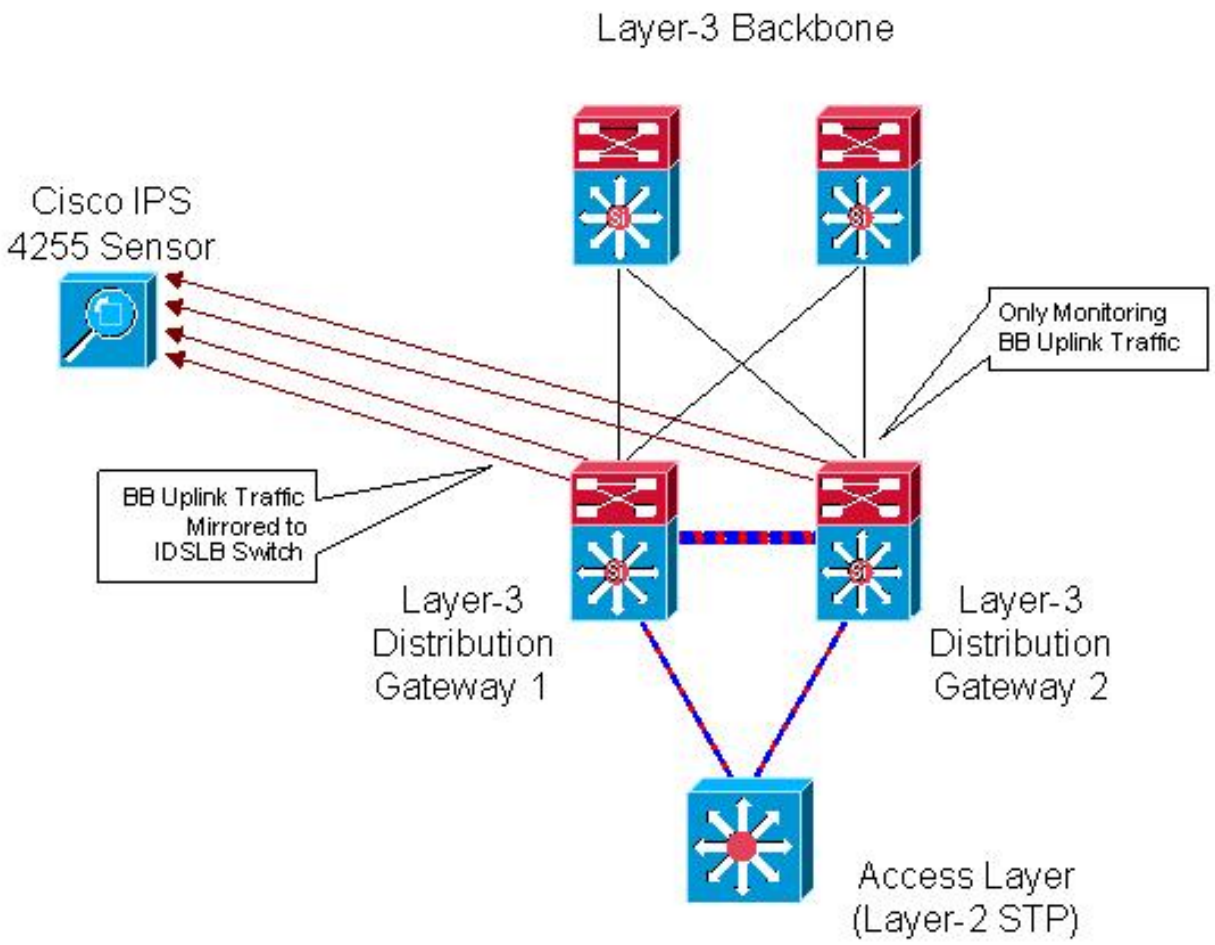

Results

Early Detection and Mitigation of Data Center Threats

- Prevention of data loss or service interruption
- Rinbot virus was detected on day zero

  Cisco CSIRT deployed a custom signature on the IPS that identified affected lab systems, which were then remediated

- Every week between March and June 2007, CSIRT identified and mitigated ten new botnet command-and-control servers

To read the entire case study, or for additional Cisco IT case studies on a variety of business solutions, visit Cisco on Cisco: Inside Cisco IT
www.cisco.com/go/ciscoit

Americas Headquarters
Cisco Systems, Inc.
170 West Tasman Drive
San Jose, CA 95134-1706
USA
www.cisco.com
Tel: 408 526-4000
800 553-NETS (6387)
Fax: 408 527-0883

Asia Pacific Headquarters
Cisco Systems (USA) Pte. Ltd.
168 Robinson Road
#28-01 Capital Tower
Singapore 068912
www.cisco.com
Tel: +65 6317 7777
Fax: +65 6317 7799

Europe Headquarters
Cisco Systems International BV
Haarlerbergpark
Haarlerbergweg 13-19
1101 CH Amsterdam
The Netherlands
www-europe.cisco.com
Tel: +31 0 800 020 0791
Fax: +31 0 20 357 1100

Cisco has more than 200 offices worldwide. Addresses, phone numbers, and fax numbers are listed on the Cisco Website at **www.cisco.com/go/offices.**