Laser Link III Mainframe and Laser Link Mini-Mainframe

Installation and Operation Guide

For Your Safety

Explanation of Warning and Caution Icons

Avoid personal injury and product damage! Do not proceed beyond any symbol until you fully understand the indicated conditions.

The following warning and caution icons alert you to important information about the safe operation of this product:

You may find this symbol in the document that accompanies this product. This symbol indicates important operating or maintenance instructions.

You may find this symbol affixed to the product. This symbol indicates a live terminal where a dangerous voltage may be present; the tip of the flash points to the terminal device.

You may find this symbol affixed to the product. This symbol indicates a protective ground terminal.

You may find this symbol affixed to the product. This symbol indicates a chassis terminal (normally used for equipotential bonding).

You may find this symbol affixed to the product. This symbol warns of a potentially hot surface.

You may find this symbol affixed to the product and in this document. This symbol indicates an infrared laser that transmits intensity-modulated light and emits invisible laser radiation or an LED that transmits intensity-modulated light.

Important

Please read this entire guide. If this guide provides installation or operation instructions, give particular attention to all safety statements included in this guide.

Notices

Trademark Acknowledgments

Cisco and the Cisco logo are trademarks or registered trademarks of Cisco and/or its affiliates in the U.S. and other countries. To view a list of cisco trademarks, go to this URL: **www.cisco.com/go/trademarks**.

Third party trademarks mentioned are the property of their respective owners.

The use of the word partner does not imply a partnership relationship between Cisco and any other company. (1110R)

Publication Disclaimer

Cisco Systems, Inc. assumes no responsibility for errors or omissions that may appear in this publication. We reserve the right to change this publication at any time without notice. This document is not to be construed as conferring by implication, estoppel, or otherwise any license or right under any copyright or patent, whether or not the use of any information in this document employs an invention claimed in any existing **or** later issued patent.

Copyright

© 2008, 2012 Cisco and/or its affiliates. All rights reserved. Printed in the United States of America.

Information in this publication is subject to change without notice. No part of this publication may be reproduced or transmitted in any form, by photocopy, microfilm, xerography, or any other means, or incorporated into any information retrieval system, electronic or mechanical, for any purpose, without the express permission of Cisco Systems, Inc.

Contents

Important Safety Instructions iv
Laser Safety xii

Chapter 1 General Information
Overview 1-1
Laser Link System Equipment Description 1-2
Laser Link III Mainframe Description 1-3
Laser Link Mini-Mainframe Description 1-7
List of Abbreviations 1-9

Chapter 2 Installation
Overview 2-1
Laser Link III Mainframe Installation 2-2
Laser Link III Mainframe Electrical Connections 2-5
Laser Link Mini-Mainframe Installation 2-9
Laser Link Mini-Mainframe Electrical Connections 2-10

Chapter 3 Setup and Operation
Overview 3-1
Section A Initial Checkout
Laser Link III Mainframe Initial Checkout 3-3
Laser Link Mini-Mainframe Initial Checkout 3-5
Section B Controls and Indicators
Laser Link III Mainframe Controls and Indicators 3-8
Laser Link Mini-Mainframe Controls and Indicators 3-11
Section C Alarms
Alarm Tables 3-14
Telemetry Connectors 3-25

Chapter 4 Customer Information 6-1

Important Safety Instructions

Read and Retain Instructions

Carefully read all safety and operating instructions before operating this equipment, and retain them for future reference.

Follow Instructions and Heed Warnings

Follow all operating and use instructions. Pay attention to all warnings and cautions in the operating instructions, as well as those that are affixed to this equipment.

Terminology

The terms defined below are used in this document. The definitions given are based on those found in safety standards.

Service Personnel - The term *service personnel* applies to trained and qualified individuals who are allowed to install, replace, or service electrical equipment. The service personnel are expected to use their experience and technical skills to avoid possible injury to themselves and others due to hazards that exist in service and restricted access areas.

User and Operator - The terms *user* and *operator* apply to persons other than service personnel.

Ground(ing) and Earth(ing) - The terms *ground(ing)* and *earth(ing)* are synonymous. This document uses ground(ing) for clarity, but it can be interpreted as having the same meaning as earth(ing).

Electric Shock Hazard

This equipment meets applicable safety standards.

> **WARNING!**
>
> **To reduce risk of electric shock, perform only the instructions that are included in the operating instructions. Refer all servicing to qualified service personnel only.**

Electric shock can cause personal injury or even death. Avoid direct contact with dangerous voltages at all times. The protective ground connection, where provided, is essential to safe operation and must be verified before connecting the power supply.

Know the following safety warnings and guidelines:

- **Dangerous Voltages**
  - Only qualified service personnel are allowed to perform equipment installation or replacement.
  - Only qualified service personnel are allowed to remove chassis covers and access any of the components inside the chassis.
- **Grounding**
  - Do not violate the protective grounding by using an extension cable, power cable, or autotransformer without a protective ground conductor.
  - Take care to maintain the protective grounding of this equipment during service or repair and to re-establish the protective grounding before putting this equipment back into operation.

Important Safety Instructions, Continued

Installation Site

When selecting the installation site, comply with the following:

- **Protective Ground** - The protective ground lead of the building's electrical installation should comply with national and local requirements.
- **Environmental Condition –** The installation site should be dry, clean, and ventilated. Do not use this equipment where it could be at risk of contact with water. Ensure that this equipment is operated in an environment that meets the requirements as stated in this equipment's technical specifications, which may be found on this equipment's data sheet.

Installation Requirements

> ⚠ **WARNING:**
>
> **Allow only qualified service personnel to install this equipment. The installation must conform to all local codes and regulations.**

Equipment Placement

> ⚠ **WARNING:**
>
> **Avoid personal injury and damage to this equipment. An unstable mounting surface may cause this equipment to fall.**

To protect against equipment damage or injury to personnel, comply with the following:

- Install this equipment in a restricted access location.
- Do not install near any heat sources such as radiators, heat registers, stoves, or other equipment (including amplifiers) that produce heat.
- Place this equipment close enough to a mains AC outlet to accommodate the length of this equipment's power cord.
- Route all power cords so that people cannot walk on, place objects on, or lean objects against them. This may pinch or damage the power cords. Pay particular attention to power cords at plugs, outlets, and the points where the power cords exit this equipment.
- Use only with a cart, stand, tripod, bracket, or table specified by the manufacturer, or sold with this equipment.
- Make sure the mounting surface or rack is stable and can support the size and weight of this equipment.
- The mounting surface or rack should be appropriately anchored according to manufacturer's specifications. Ensure this equipment is securely fastened to the mounting surface or rack where necessary to protect against damage due to any disturbance and subsequent fall.

Ventilation

This equipment has openings for ventilation to protect it from overheating. To ensure equipment reliability and safe operation, do not block or cover any of the ventilation openings. Install the equipment in accordance with the manufacturer's instructions.

Rack Mounting Safety Precautions

Mechanical Loading

Make sure that the rack is placed on a stable surface. If the rack has stabilizing devices, install these stabilizing devices before mounting any equipment in the rack.

> ⚠ **WARNING:**
>
> **Avoid personal injury and damage to this equipment. Mounting this equipment in the rack should be such that a hazardous condition is not caused due to uneven mechanical loading.**

Reduced Airflow

When mounting this equipment in the rack, do not obstruct the cooling airflow through the rack. Be sure to mount the blanking plates to cover unused rack space. Additional components such as combiners and net strips should be mounted at the back of the rack, so that the free airflow is not restricted.

> ⚠ **CAUTION:**
>
> **Installation of this equipment in a rack should be such that the amount of airflow required for safe operation of this equipment is not compromised.**

Elevated Operating Ambient Temperature

Only install this equipment in a humidity- and temperature-controlled environment that meets the requirements given in this equipment's technical specifications.

> ⚠ **CAUTION:**
>
> **If installed in a closed or multi-unit rack assembly, the operating ambient temperature of the rack environment may be greater than room ambient temperature. Therefore, install this equipment in an environment compatible with the manufacturer's maximum rated ambient temperature**.

Handling Precautions

When moving a cart that contains this equipment, check for any of the following possible hazards:

> ⚠ **WARNING:**
>
>
>
> **Avoid personal injury and damage to this equipment! Move any equipment and cart combination with care. Quick stops, excessive force, and uneven surfaces may cause this equipment and cart to overturn.**

- Use caution when moving this equipment/cart combination to avoid injury from tip-over.

- If the cart does not move easily, this condition may indicate obstructions or cables that may need to be disconnected before moving this equipment to another location.
- Avoid quick stops and starts when moving the cart.
- Check for uneven floor surfaces such as cracks or cables and cords.

Grounding

This section provides instructions for verifying that the equipment is properly grounded.

Safety Plugs (USA Only)

This equipment is equipped with either a 3-terminal (grounding-type) safety plug or a 2-terminal (polarized) safety plug. The wide blade or the third terminal is provided for safety. Do not defeat the safety purpose of the grounding-type or polarized safety plug.

To properly ground this equipment, follow these safety guidelines:

- **Grounding-Type Plug** - For a 3-terminal plug (one terminal on this plug is a protective grounding pin), insert the plug into a grounded mains, 3-terminal outlet.

  Note: This plug fits only one way. If this plug cannot be fully inserted into the outlet, contact an electrician to replace the obsolete 3-terminal outlet.

- **Polarized Plug** - For a 2-terminal plug (a polarized plug with one wide blade and one narrow blade), insert the plug into a polarized mains, 2-terminal outlet in which one socket is wider than the other.

  Note: If this plug cannot be fully inserted into the outlet, try reversing the plug. If the plug still fails to fit, contact an electrician to replace the obsolete 2-terminal outlet.

Grounding Terminal

If this equipment is equipped with an external grounding terminal, attach one end of an 18-gauge wire (or larger) to the grounding terminal; then, attach the other end of the wire to a ground, such as a grounded equipment rack.

Safety Plugs (European Union)

- **Class I Mains Powered Equipment –** Provided with a 3-terminal AC inlet and requires connection to a 3-terminal mains supply outlet via a 3-terminal power cord for proper connection to the protective ground.

  Note: The equipotential bonding terminal provided on some equipment is not designed to function as a protective ground connection.

- **Class II Mains Powered Equipment –** Provided with a 2-terminal AC inlet that may be connected by a 2-terminal power cord to the mains supply outlet. No connection to the protective ground is required as this class of equipment is provided with double or reinforced and/or supplementary insulation in addition to the basic insulation provided in Class I equipment.

  Note: Class II equipment, which is subject to EN 50083-1, is provided with a chassis mounted equipotential bonding terminal. See the section titled **Equipotential Bonding** for connection instructions.

Important Safety Instructions, Continued

Equipotential Bonding

If this equipment is equipped with an external chassis terminal marked with the IEC 60417-5020 chassis icon (), the installer should refer to CENELEC standard EN 50083-1 or IEC standard IEC 60728-11 for correct equipotential bonding connection instructions.

AC Power

Important: If this equipment is a Class I equipment, it must be grounded.

- If this equipment plugs into an outlet, the outlet must be near this equipment, and must be easily accessible.
- Connect this equipment only to the power sources that are identified on the equipment-rating label normally located close to the power inlet connector(s).
- This equipment may have two power sources. Be sure to disconnect all power sources before working on this equipment.
- If this equipment **does not** have a main power switch, the power cord connector serves as the disconnect device.
- Always pull on the plug or the connector to disconnect a cable. Never pull on the cable itself.
- Unplug this equipment when unused for long periods of time.

Connection to –48 V DC/–60 V DC Power Sources

If this equipment is DC-powered, refer to the specific installation instructions in this manual or in companion manuals in this series for information on connecting this equipment to nominal -48 V DC/-60 V DC power sources.

Circuit Overload

Know the effects of circuit overloading before connecting this equipment to the power supply.

⚠ CAUTION:

Consider the connection of this equipment to the supply circuit and the effect that overloading of circuits might have on overcurrent protection and supply wiring. Refer to the information on the equipment-rating label when addressing this concern.

General Servicing Precautions

⚠ WARNING:

Avoid electric shock! Opening or removing this equipment's cover may expose you to dangerous voltages.

Be aware of the following general precautions and guidelines:

- **Servicing** - Refer all servicing to qualified service personnel. Servicing is required when this equipment has been damaged in any way, such as power supply cord or plug is damaged, liquid has been spilled or objects have fallen into this equipment, this equipment has been exposed to rain or moisture, does not operate normally, or has been dropped.

- **Wristwatch and Jewelry** - For personal safety and to avoid damage of this equipment during service and repair, do not wear electrically conducting objects such as a wristwatch or jewelry.
- **Lightning -** Do not work on this equipment, or connect or disconnect cables, during periods of lightning.
- **Labels** - Do not remove any warning labels. Replace damaged or illegible warning labels with new ones.
- **Covers -** Do not open the cover of this equipment and attempt service unless instructed to do so in the instructions. Refer all servicing to qualified service personnel only.
- **Moisture** - Do not allow moisture to enter this equipment.
- **Cleaning** - Use a damp cloth for cleaning.
- **Safety Checks** - After service, assemble this equipment and perform safety checks to ensure it is safe to use before putting it back into operation.

Electrostatic Discharge

Electrostatic discharge (ESD) results from the static electricity buildup on the human body and other objects. This static discharge can degrade components and cause failures.

Take the following precautions against electrostatic discharge:

- Use an anti-static bench mat and a wrist strap or ankle strap designed to safely ground ESD potentials through a resistive element.
- Keep components in their anti-static packaging until installed.
- Avoid touching electronic components when installing a module.

Fuse Replacement

To replace a fuse, comply with the following:

- Disconnect the power before changing fuses.
- Identify and clear the condition that caused the original fuse failure.
- Always use a fuse of the correct type and rating. The correct type and rating are indicated on this equipment.

Lithium Battery

For equipment with a lithium battery, observe the following rules:

- Do not dispose of used batteries through the regular garbage collection system, but follow the local regulations. The batteries may contain substances that could be harmful to the environment.
- Replace batteries with the same or equivalent type recommended by Cisco.
- Insert batteries correctly. There may be a risk of explosion if the batteries are incorrectly inserted.
- When disposing of this equipment, remove the batteries and dispose of them separately in accordance with local regulations.
- Do not recharge the batteries or expose them to temperatures above 100°C (212°F).

Electromagnetic Compatibility Regulatory Requirements

This equipment meets applicable electromagnetic compatibility (EMC) regulatory requirements. EMC performance is dependent upon the use of correctly shielded cables of good quality for all external connections, except the power source, when installing this equipment.

- Ensure compliance with cable/connector specifications and associated installation instructions where given elsewhere in this manual.

Otherwise, comply with the following good practices:

- Multi-conductor cables should be of single-braided, shielded type and have conductive connector bodies and backshells with cable clamps that are conductively bonded to the backshell and capable of making 360° connection to the cable shielding. Exceptions from this general rule will be clearly stated in the connector description for the excepted connector in question.
- Ethernet cables should be of single-shielded or double-shielded type.
- Coaxial cables should be of the double-braided shielded type.

EMC

Where this equipment is subject to USA FCC and/or Industry Canada rules, the following statements apply:

FCC Statement for Class A Equipment

This equipment has been tested and found to comply with the limits for a Class A digital device, pursuant to Part 15 of the FCC Rules. These limits are designed to provide reasonable protection against harmful interference when this equipment is operated in a commercial environment.

This equipment generates, uses, and can radiate radio frequency energy and, if not installed and used in accordance with the instruction manual, may cause harmful interference to radio communications. Operation of this equipment in a residential area is likely to cause harmful interference in which case users will be required to correct the interference at their own expense.

Industry Canada – Industrie Canadienne Statement

This apparatus complies with Canadian ICES-003.
Cet appareil est confome à la norme NMB-003 du Canada.

CENELEC/CISPR Statement with Respect to Class A Information Technology Equipment

This is a Class A equipment. In a domestic environment this equipment may cause radio interference in which case the user may be required to take adequate measures.

Modifications

This equipment has been designed and tested to comply with applicable safety, laser safety, and EMC regulations, codes, and standards to ensure safe operation in its intended environment.

Do not make modifications to this equipment. Any changes or modifications could void the user's authority to operate this equipment.

Modifications have the potential to degrade the level of protection built into this equipment, putting people and property at risk of injury or damage. Those persons making any modifications expose themselves to the penalties arising from proven non-compliance with regulatory requirements and to civil litigation for compensation in respect of consequential damages or injury.

Accessories

Use only attachments or accessories specified by the manufacturer.

Laser Safety

Introduction

These are general laser safety precautions, not related to any specific procedure, that all personnel should understand and apply.

Warning: Radiation

WARNINGS:

- **Avoid personal injury! Use of controls, adjustments, or performance of procedures other than those specified herein may result in hazardous radiation exposure.**
- **Avoid personal injury! The laser light source on this equipment emits invisible laser radiation. Avoid direct exposure to the laser light source.**

- Do not apply power to this equipment if the fiber is unmated or unterminated.
- Do not stare into an unmated fiber or at any mirror-like surface that could reflect light that is emitted from an unterminated fiber.
- Do not view an activated fiber with optical instruments (e.g., eye loupes, magnifiers, microscopes).
- Use safety-approved optical fiber cable to maintain compliance with applicable laser safety requirements.

Warning: Fiber Optic Cables

WARNING:

Avoid personal injury! Qualified service personnel may only perform the procedures in this manual. Wear safety glasses and use extreme caution when handling fiber optic cables, particularly during splicing or terminating operations. The thin glass fiber core at the center of the cable is fragile when exposed by the removal of cladding and buffer material. It easily fragments into glass splinters. Using tweezers, place splinters immediately in a sealed waste container and dispose of them safely in accordance with local regulations.

Safe Operation For Software Controlling Optical Transmission Equipment

If this manual discusses software, the software described is used to monitor and/or control Cisco and other vendors' electrical and optical equipment designed to transmit video, voice, or data signals. Certain safety precautions should be observed when operating equipment of this nature.

For equipment specific safety requirements, refer to the appropriate section of the equipment documentation.

For safe operation of this software, refer to the following warnings.

WARNINGS:

- **Ensure that all optical connections are complete or terminated before using this equipment to remotely control a laser device. An optical or laser device can pose a hazard to remotely located personnel when operated without their knowledge.**
- **Allow only personnel trained in laser safety to operate this software. Otherwise, injuries to personnel may occur.**
- **Restrict access of this software to authorized personnel only.**
- **Install this software in equipment that is located in a restricted access area.**

Chapter 1
General Information

Overview

Introduction

This manual describes the installation and operation of the following mainframes:

- Laser Link III™ Mainframe
- Laser Link® Mini-Mainframe

In This Chapter

This chapter contains the following topics.

Topic	See Page
Laser Link System Equipment Description	1-2
Laser Link III Mainframe Description	1-3
Laser Link Mini-Mainframe Description	1-7
List of Abbreviations	1-9

Laser Link System Equipment Description

Overview

The Laser Link system is used to transport broadband telecommunications signals on fiber optic cable. The Laser Link system consists of a mainframe (standard or mini), power supplies, and a family of modules including transmitters (upstream and downstream), optical/RF amplifiers, receivers (upstream and downstream), block up/down converters, and RF/optical switches.

Mainframe Functional Description

The Laser Link III Mainframe and the Laser Link Mini-Mainframe perform four essential functions in the overall system application:

- Housing the Laser Link modules
- Powering the modules
- Routing control and status signals to and from the modules
- Cooling

Instructions pertaining to the installation of specific modules are provided in the Installation and Operation Guide accompanying each module. Functional descriptions of power distribution and status monitoring of modules are contained in this section.

Laser Link Equipment

The Laser Link modules accommodated by the Laser Link III Mainframe and the Laser Link Mini-Mainframe include the following:

- Transmitter 1310 nm/45–870 MHz, LLT III (half-width)
- Transmitter 1550 nm/45–870 MHz, LEMT (full-width)
- Narrowcast Transmitter 1550 nm/45–870 MHz, LLNT (full-width)
- Narrowcast Return Transmitter 1550 nm/5–200 MHz, LLNTR (full-width)
- Optical Amplifier C-Band, LLOA (full-width)
- Return Receiver – 5–210 MHz, ELLRR-S (half-width)
- Receiver 50–870 MHz, LLFR (full-width)
- Return Transmitter 1310 nm/5–210 MHz, LLRT (full-width)
- Dual Amplifier, 870 MHz, LLDA (full-width)
- RF Switch 5 MHz–1 GHz, LLRS (half-width)
- Block Converter, LLUC/LLDC (half-width)

Laser Link III Mainframe Description

Overview

This section contains physical and functional descriptions of the Laser Link III Mainframe.

Physical Description

The Laser Link III Mainframe has seven full-width module bays that may be configured to support optical/RF amplifiers, upstream/downstream transmitters or downstream receivers. Plug-in modules may be arranged in various combinations within the mainframe to meet particular application needs.

Two half-width modules may be supported in a full-width bay to allow housing up to 14 such units in a 5 RU space.

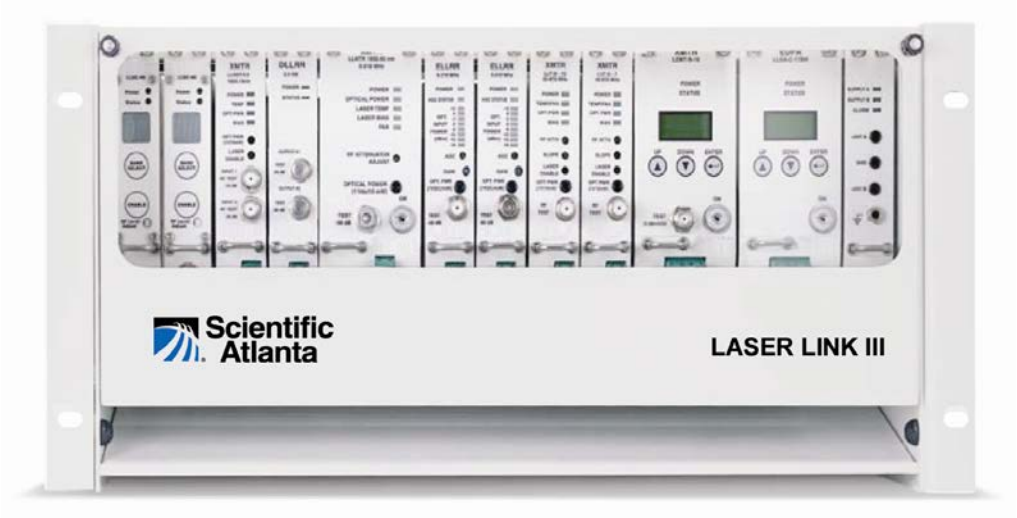

The Laser Link III Mainframe fits into a standard 5 RU (8.75 inches/22 cm) high by 19- or 23-inch (48 or 58 cm) wide area that is approximately 20 inches (51 cm) deep. It should be mounted in a cabinet that conforms to ANSI/EIA-310-C standards.

Adjustable mounting ears are provided with each unit. Four positions allow selecting the depth to which the frame is installed. The mainframe may be mounted flush to the bay or protruding up to 5 inches (13 cm). See Chapter 2, **Installation**, for information regarding maximum torque requirements when moving the ears.

Note: Ears for mounting the mainframe in a 23-inch bay are not included and must be ordered separately (P/N 704095). Also, rack screws are not included with the mainframe. See Chapter 2, **Installation**, for information regarding maximum torque requirements when replacing the ears.

Fiber may be routed from the chassis through the bubble front of the door, through ear holes on the side, or through the channel on the right side and out the rear of the unit. Nineteen-inch rear support brackets are included and their use is recommended.

Power Distribution

Main power can be universal AC,-48 V DC, or +24 V DC input. With universal AC or -48 V DC, the Laser Link III chassis requires a power supply (converter). This unit accepts the AC or the -48 V DC and performs the required conversion to output +24 V DC to the power distribution board (under which the power supply resides). Should the +24 V DC be available, the mainframe can be operated without a power supply by applying the voltage directly to the power distribution board.

Voltage applied to the power distribution board (+24 V DC) is routed to the various modules installed in the mainframe. Each module requires this voltage for normal operation. The power distribution board accepts +24 V DC as the primary input power (supply A) through the connector labeled J10. The potential is then applied to the modules through the interface cable provided with each module. This cable connects the 26-pin interface on the mainframe to the rear panel power/status D connector on the module. Fuse F2 protects the primary power (supply A). Fuse F5 is not applicable.

Redundant power (supply B) is provided in the form of +24 V DC to the terminal block of the power distribution board. The connecting point is labeled J11 and accepts +24 V DC through a spade lug type of interface. The redundant input is also load protected (fuse F1).

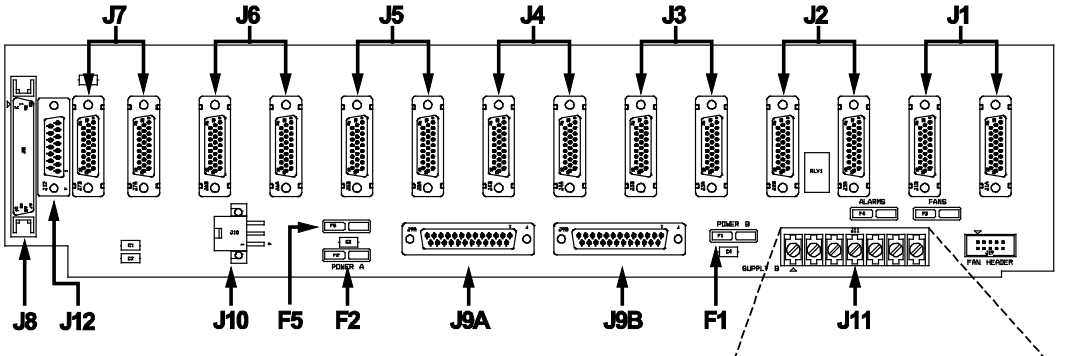

Terminal Block J11:

1. +24 V: Connection of +24 V DC B supply.
2. +24 V: Connection of +24 V DC B supply.
3. GND: Ground connection.
4. GND: Ground connection.
5. NC: Normally closed alarm relay contact for external alarm. Alarm condition = open with respect to common (6).
6. COM: Alarm relay common connection.
7. NO: Normally open alarm relay contact for external alarm. Alarm condition = closed with respect to common (6).

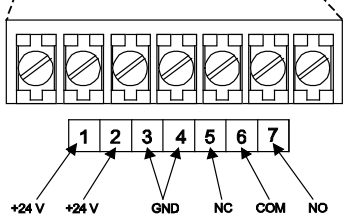

T10789

Important: Wire gauge specifications for 24 V DC/15 A input are as follows:

10′ cable: 12 AWG minimum
5′ cable: 15 AWG minimum

Terminal Block

Normally open (NO) and normally closed (NC) contact points are available on the terminal block (J11) of the power distribution board. These interface points allow you to trigger an external alarm should the general operation alarm of the mainframe toggle to an alarm state. The number five position of the terminal block may be utilized in conjunction with the common position, number six, in a normally closed alarm relay. The number seven pin may be used in conjunction with the common position in a normally open alarm relay configuration. Under normal operation (no alarm), number six and number five are closed.

Status Monitoring

Status of housed modules is supplied to users via front panel LEDs, or the ROSA™ Element Management System, or TNCS Element Management System (if used). The available monitored parameters are provided in the respective module manuals.

Status monitoring signals are routed from the rear of the module to the power distribution board. This is accomplished by connecting the module's DB15, DB26, or DB9 connector to the respective DB26 connector on the power distribution board using the interface cable provided with each module. From the board, signals are available to the user panel (J12), the element management system interface point (J8), and the telemetry interface point (J9A and J9B).

Fan Assembly

The fan assembly in the Laser Link III Mainframe is controlled by the processor. Power and signals are routed from jumper cable J6 on the fan assembly to J19 on the power distribution board. The fan assembly is accessible through a removable panel on top of the assembly. However, a minimum of 1 RU is needed for this access. See Chapter 2, **Installation**, for guidance on selecting a location to install the mainframe.

As shown in the following diagram, as a module is plugged into a particular slot in the mainframe, a corresponding fan will turn on.

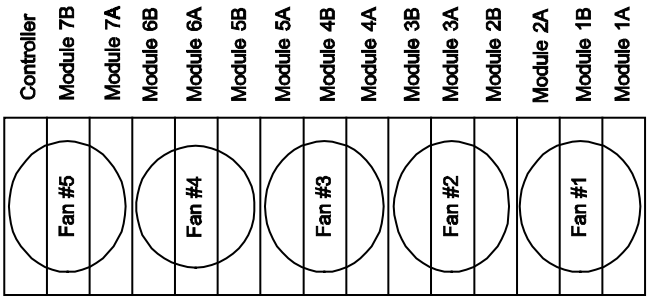

Notes:

- Modules inserted into slots 1A, 1B or 2A will turn on Fan #1.
- Modules inserted into slots 2B, 3A or 3B will turn on Fan #2.
- Modules inserted into slots 4A, 4B or 5A will turn on Fan #3.
- Modules inserted into slots 5B, 6A or 6B will turn on Fan #4.
- Modules inserted into slots 7A or 7B will turn on Fan #5.

T10790

Individual fans are monitored for rotation. If rotation is not detected, a fan alarm is generated causing the ALARM LED to flash red.

Laser Link Mini-Mainframe Description

Overview

This section contains physical and functional descriptions of the Laser Link Mini-Mainframe.

Physical Description

The Laser Link Mini-Mainframe fits into a standard 2 RU (3.5 inch/8.89 cm) high by 19- or 23-inch (48 or 58 cm) wide area that is approximately 20 inches (51 cm) deep. It should be mounted in a cabinet that conforms to ANSI/EIA-310-C standards. The 2 RU space accommodates four half-width modules or two full-width modules.

Mounting brackets (19″) are provided with each unit.

Self-adhesive fiber routing clips are provided to secure fiber routed from modules.

Power Distribution

Main power may be universal AC, -48 V DC, or +24 V DC input. With universal AC or -48 V DC, the mainframe chassis requires a power supply or converter, respectively. The power supply is located behind the fan assembly. This unit accepts the AC or the -48 V DC and performs the required conversion to output +24 V DC to the power distribution board. Should the +24 V DC be available, the mainframe may be operated without a power supply by applying the voltage directly to the power distribution board.

Voltage applied to the power distribution board (+24 V DC, 2.5 A maximum) is routed to the various modules installed in the mainframe. Each module requires this voltage for normal operation. The power distribution board accepts +24 V DC as the primary input power (supply A) through the connector labeled J3. The potential is then applied to the modules through the interface cable provided with each module. This cable connects the 26-pin interface on the Mini-Mainframe (JXA1) to the rear panel power/status D connector on the module. The fuse labeled F3 protects the primary power (supply A).

Redundant power (supply B) is provided in the form of +24 V DC to the terminal block of the power distribution board. The connecting point, located on the bottom rear of the assembly, is labeled J1 and accepts +24 V DC through a 4-pin connector. The redundant load is also load protected (fuse F1).

Alarm Relay

Normally open and normally closed contact points are available on the alarm relay (J4) of the power distribution board. These interface points allow you to trigger an external alarm should the general operation alarm of the mainframe toggle to an alarm state. The pinout is shown in the following table.

Relay Contact	Condition	Pin
NC	Normal	1
NO	Normal	2
NO	Alarm	1
NC	Alarm	2
Common		3

Status Monitoring

Status of housed modules is supplied to users via front panel LEDs.

Status monitoring signals are routed from the rear of the module to the power distribution board. This is accomplished through connection of the power distribution board's (HD DB26F) connectors to the individual modules using the appropriate interface cables.

Integrated Dual Fan Assembly

A dual fan assembly provides cooling for the Mini-Mainframe.

Note: The dual fan assembly is removable from the front of the mainframe.

List of Abbreviations

Abbreviations

This table lists abbreviations used in this publication.

Abbreviation	Definition
°C	degrees Celsius
°F	degrees Fahrenheit
A	ampere
AC	alternating current
ADDR	address
AMP	amplifier
ANSI	American National Standards Institute
cm	centimeter
COM	common
dB	decibel
dBm	decibel referenced to one milliwatt
dBmV	decibel relative to one millivolt
DC	direct current
DFB	distributed feedback
DWDM	dense wave division multiplexing
EIA	Electronic Industry Association
EMIC	Element Management Interface Card
GHz	gigahertz
GND	ground
kg	kilogram
lb	pound (weight)
LED	light emitting diode
ma	milliampere

List of Abbreviations, Continued

Abbreviation	Definition
MHz	megahertz
mm	millimeter
mW	milliwatt
nm	nanometer
NC	normally closed
NO	normally open
RCVR	receiver
RF	radio frequency
RPAN	redundant power alarm
RU	rack unit
V	volt
V AC	volts alternating current
V DC	volts direct current
W	watt
XMTR	transmitter

Chapter 2
Installation

Overview

Introduction

This chapter describes the installation of the following mainframes:

- Laser Link III Mainframe
- Laser Link Mini-Mainframe

This chapter covers installing the mainframe hardware and making electrical connections. For information on installing modules in the mainframe, refer to the installation and operation guides for the specific modules.

In This Chapter

This chapter contains the following sections.

Section	See Page
Laser Link III Mainframe Installation	2-2
Laser Link III Mainframe Electrical Connections	2-5
Laser Link Mini-Mainframe Installation	2-9
Laser Link Mini-Mainframe Electrical Connections	2-10

Laser Link III Mainframe Installation

Overview

This section provides step-by-step instructions for installing the Laser Link III Mainframe and describes how to make electrical connections. For information on installing modules in the mainframes, refer to the specific module manual.

For ease of installation and safety, keep the following in mind throughout this procedure.

> ⚠ **CAUTION:**
>
> **Any time the mounting ears attached to the mainframe are moved (in order to adjust the depth to which the mainframe is installed) or replaced (in order to mount the mainframe in a 23-inch bay) the maximum allowable torque for tightening the screws is 7 to 9 in-lbs. Failure to adhere to this caution may result in equipment damage.**

Elevated Operating Ambient

If the mainframe is installed in a closed or multi-unit rack assembly, the operating temperature inside the rack may become elevated. Use care to ensure that this elevated temperature does not exceed the rated temperature for the unit.

Reduced Air Flow

When selecting a location to install the mainframe, follow these guidelines.

- A 1 RU (1.75-inch/4.4 cm) clearance above the uppermost mainframe in the rack is required for ventilation.
- A 1 RU (1.75-inch/4.4 cm) clearance is necessary if the product mounted above the mainframe has a solid, flat bottom that would restrict airflow when placed directly on top of the mainframe.
- Additional mainframes may be directly racked on top of one another, as ventilation space is integral to the mainframe. However, this particular configuration does not allow access to, or removal of, the fan assembly.
- An enclosed rack with side panels and rear doors installed will allow for "chimney effect" airflow to occur. This type of airflow maximizes the convection cooling characteristics of the mainframe.

Mechanical Loading

When mounting the mainframe in the rack, be aware that uneven loading could skew the center of gravity, resulting in a hazardous condition.

Circuit Overloading

When connecting the equipment to the supply circuit be aware of the effect that overloading of circuits could have on overcurrent protection and supply wiring. Consideration of equipment nameplate ratings should be used when addressing this concern.

Reliable Grounding

Reliable grounding of rack-mounted equipment should be maintained. Particular attention should be given to supply connections other than direct connections to the branch (e.g. use of power strips).

Tools and Equipment

The following tools and equipment are required for installation.

- #2 Phillips-head screwdriver

Procedure

Follow this procedure to install the Laser Link III Mainframe.

1. Position the mainframe in the desired location, using two people to support it until it can be secured with hardware.

   Note: The Laser Link III Mainframe is intended for installation and operation in a restricted access area.

2. Secure the mainframe into position from the front using four standard rack screws.

3. Install the two support brackets to the mainframe, using screws (A) as shown below. Do not tighten screws at this time.

   Note: The screws (A) are inserted from inside the mainframe, passing through the bracket and then into the mainframe side panel. These screws should be put in first.

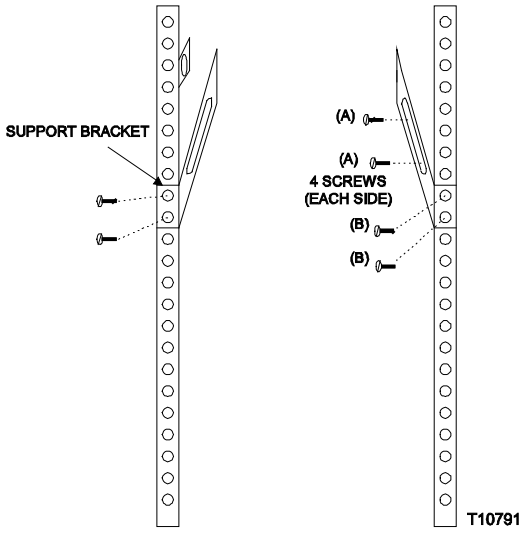

4. Push the support bracket forward until it contacts the rear upright of the cabinet.
5. Tighten the support bracket to the cabinet upright, using screws (B).
6. Tighten the screws (A) holding the support mounting brackets to the side plates.
7. Prepare incoming fiber cable through utilization of a fiber management system or direct connection. In the case of direct connection, provide strain relief with a cable clamp.

Laser Link III Mainframe Electrical Connections

Overview

The Laser Link III Mainframe requires the following electrical connections:

- Power supply
- Power distribution board

Power Supply Connections

Connect the power supplies as described below.

IF the primary input is…	**THEN…**
an AC power source	connect the power cord to the mainframe and power source.
a -48 V DC power source	apply -48 V DC potential on the rear of the power supply, using the supplied connectors (and noting polarity). See **Rear Panel Drawing**.

Rear Panel Drawing

The following illustration shows the rear panel.

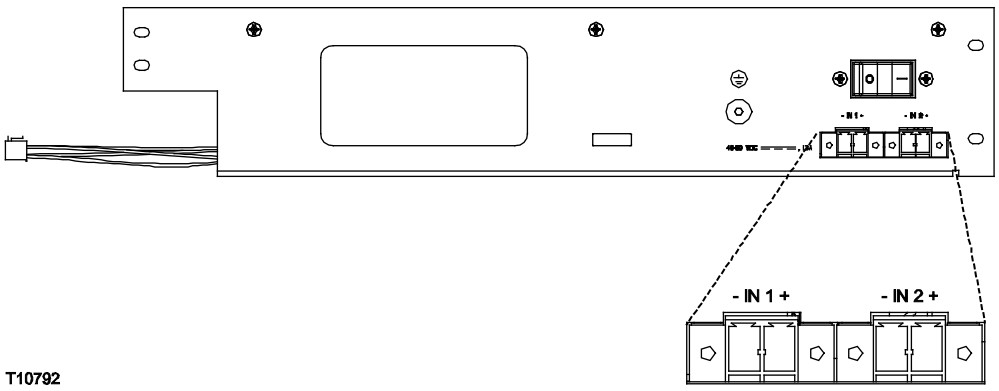

Important: Connect the -48 V potential to the negative terminal. Connect the ground potential (DC return) to the positive terminal. Wire gauge specifications for the -48 V DC/13 A input are as follows:

10′ cable: 17 AWG minimum
5′ cable: 20 AWG minimum

Power Distribution Board

The power distribution board routes status and powering signals to and from the housed modules. The illustration below is a general location view of the power distribution board.

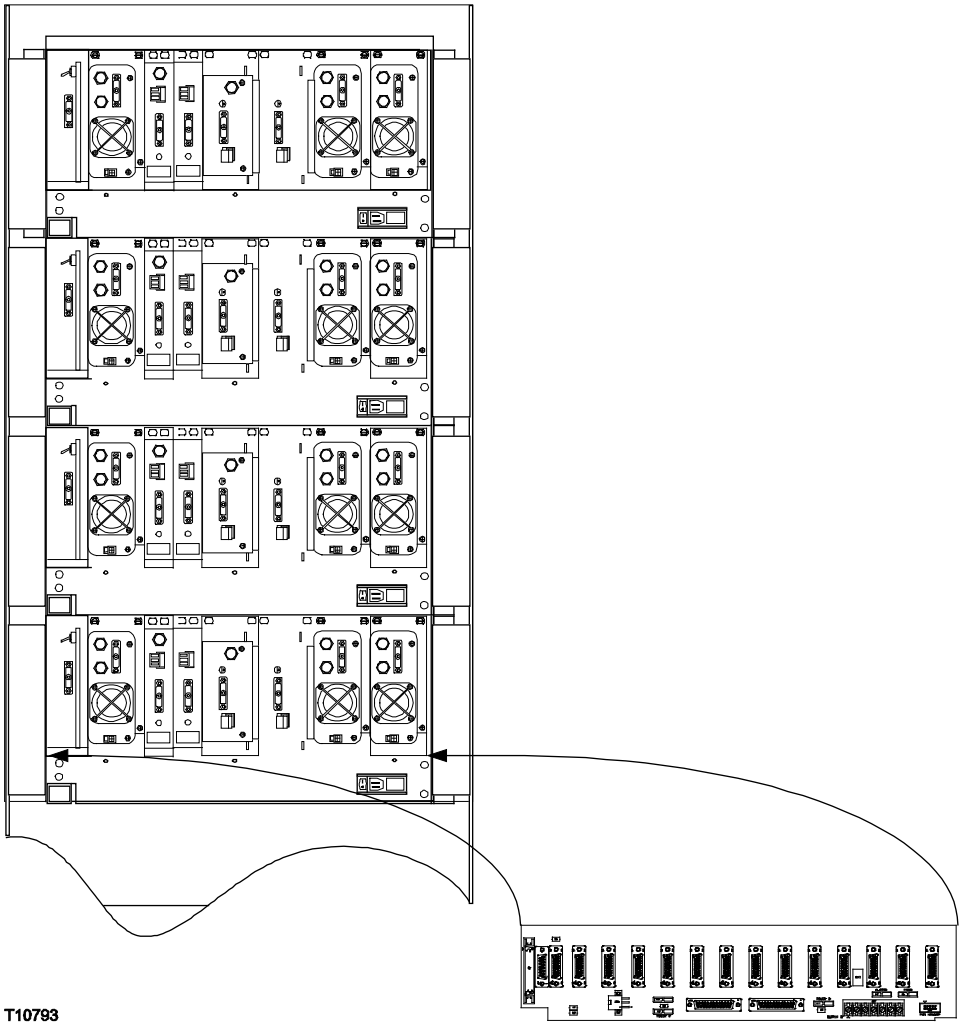

Power Distribution Board Connectors

Interfaces J1 through J7 (A and B) provide the connection points for housed modules to the mainframe. Individual module manuals describe the pins utilized for each module. Status monitoring (J12), EMIC (J8), primary power (J10) and telemetry connection points (J9A and J9B) are labeled on the board. The terminal block (J11) provides connection for the +24 V DC redundant input and for the alarm relay contacts. Alarm relays may be used to trigger external alarming systems.

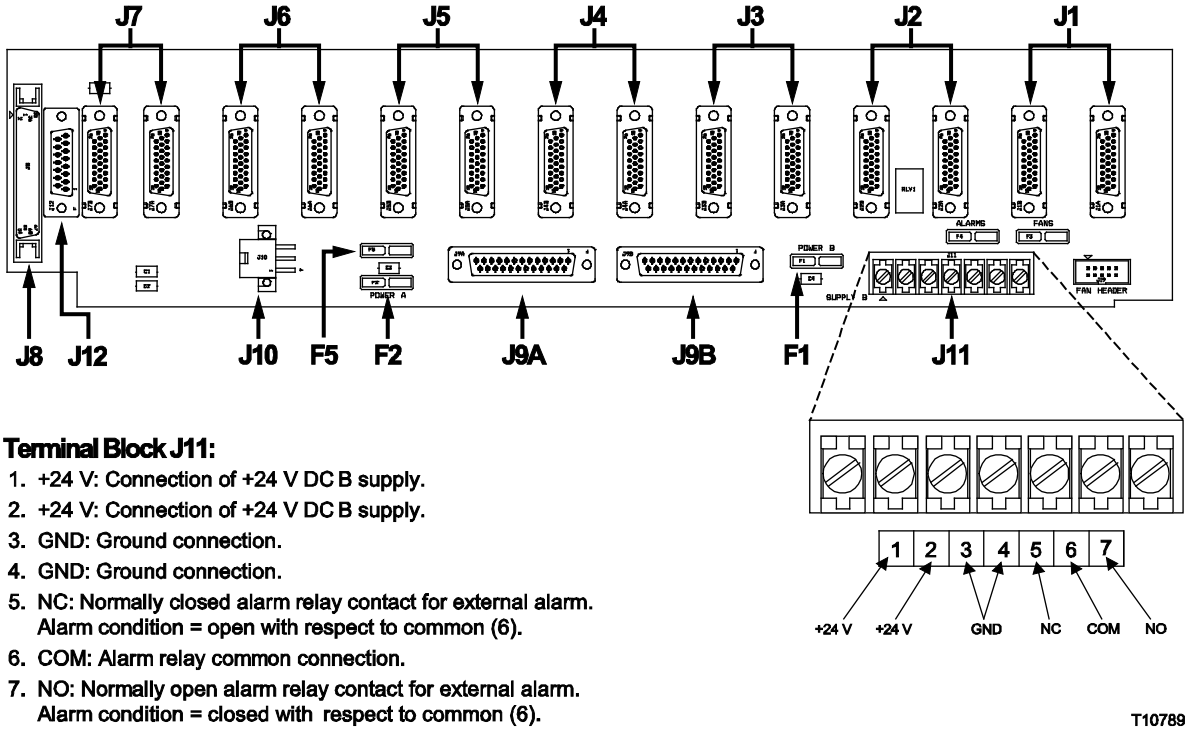

Terminal Block J11:

1. +24 V: Connection of +24 V DC B supply.
2. +24 V: Connection of +24 V DC B supply.
3. GND: Ground connection.
4. GND: Ground connection.
5. NC: Normally closed alarm relay contact for external alarm. Alarm condition = open with respect to common (6).
6. COM: Alarm relay common connection.
7. NO: Normally open alarm relay contact for external alarm. Alarm condition = closed with respect to common (6).

Important: Wire gauge specifications for 24 V DC/15 A input are as follows:

10′ cable: 12 AWG minimum
5′ cable: 15 AWG minimum

Procedure

Follow these steps to install power supply B.

1. Physically secure the alternate (redundant) power supply in a suitable location near the mainframe.
2. Connect the provided power interface cable to the redundant supply (female to male molex connection).
3. Connect the four wires on the opposite end of the power interface cable to the terminal block of the power distribution board (J11) as follows:
   - +24 V DC to terminal 1
   - +24 V DC to terminal 2
   - Ground leads to terminals 3 and 4
4. Ensure the Redundant Power/"B" Alarm switch is to the forward position on the EMIC module or the ON position on the Status Monitoring module.

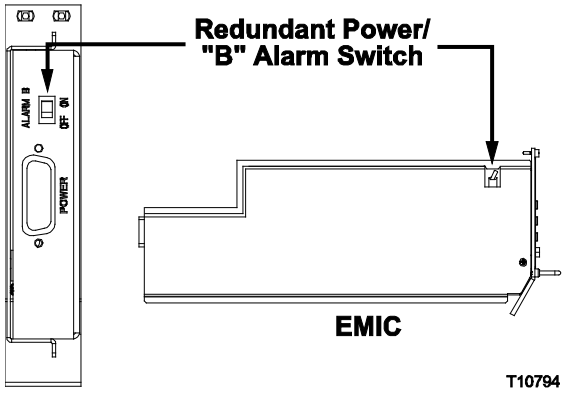

5. Continue to Chapter 3, **Setup and Operation**.

Laser Link Mini-Mainframe Installation

Procedure

Follow these steps to install the Laser Link Mini-Mainframe.

1. Position the Mini-Mainframe in the desired location, using two people to support it until it can be secured with hardware.

   Note: The Laser Link Mini-Mainframe is intended for installation and operation in a restricted access area.

2. Secure the Mini-Mainframe into position from the front using the rack clips and mounting screws provided. Tighten screws using a #2 Phillips-head screwdriver.

   Note: The Mini-Mainframe is equipped with 19-inch mounting brackets.

3. Place self-adhesive fiber routing clips in the appropriate position on the Mini-Mainframe (in front of the module's right/left side fiber connector, ½ inch in) to secure the module's routed fiber.

Laser Link Mini-Mainframe Electrical Connections

Overview

The Laser Link Mini-Mainframe requires electrical connections to the power supply and the power distribution board.

Power Supply Connections

> ⚠ **CAUTION:**
>
> **Use extreme caution and maintain proper polarity when connecting the supply voltage to the mainframe. Improper polarity will cause an internal fuse failure. Failure to adhere to this caution will result in equipment damage.**

Connect the power supplies as described below.

IF the primary input…	**THEN…**
is an AC power source	connect the power cord to the mainframe and power source.
is a -48 V DC power source	apply -48 V DC potential using the supplied connector pins (noting polarity). Use the PEM stud to ground the Mini-Mainframe to the equipment rack. See **Rear Panel Drawing** below for a connection example.

Rear Panel Drawing

The following illustration shows the correct connections for -48 V DC power.

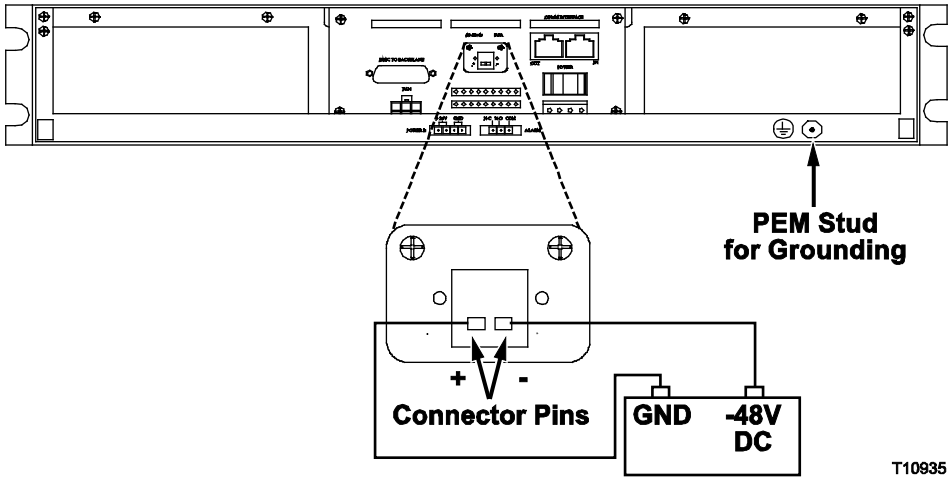

Important: Facing the back of the unit (as shown), the connector pin on the left is positive, as marked. The connector pin on the right is negative, as marked.

Clamp-on Ferrite Bead

The clamp-on ferrite bead provided with the unit is required for EMI shielding. Refer to the illustrations below and observe the following:

- AC Unit: Place the ferrite bead on the AC power cord in the location shown and snap it shut.
- DC Unit: Position the ferrite bead in the location shown and place the two -48 V DC wires in the ferrite bead barrel. Loop the wires around the ferrite bead once and snap it shut.

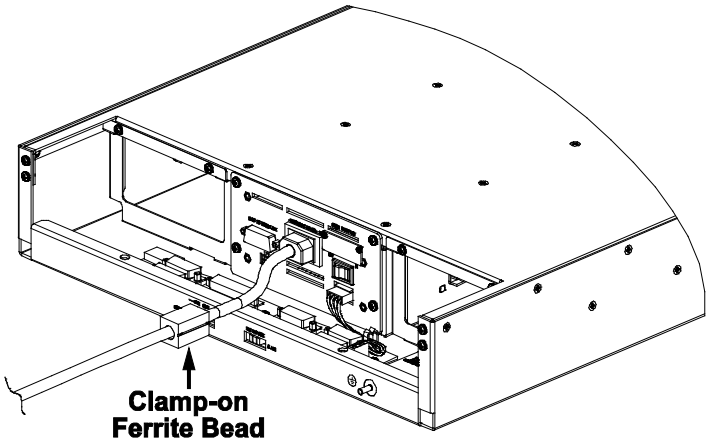

AC Unit

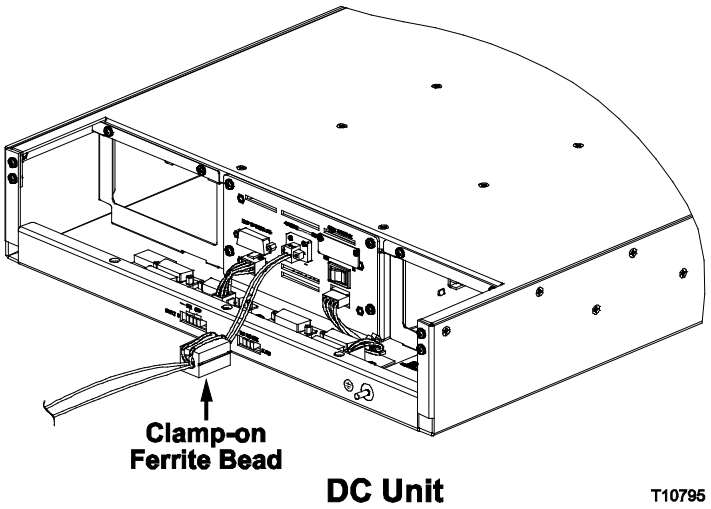

DC Unit

T10795

Power Distribution Board

The power distribution board routes status and powering signals to and from the housed modules. It is located on the rear of the product.

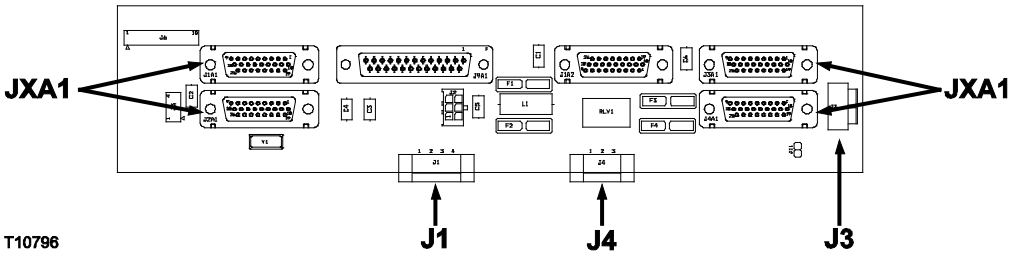

Procedure

Follow these steps to install power supply B.

1. Physically secure the alternate (redundant) power supply in a suitable location near the Mini-Mainframe.
2. Connect the power supply B interface cable to J1 on the power distribution board.
3. Connect the four wires on the opposite end of the power interface cable to power supply B as follows:
   - +24 V DC to J1-1 and J1-2
   - Ground leads to J1-3 and J1-4
4. Continue to Chapter 3, **Setup and Operation**.

Chapter 3
Setup and Operation

Overview

Introduction

This chapter describes how to set up and operate the Laser Link III Mainframe and the Laser Link Mini-Mainframe. These procedures assume the mainframe is installed according to the procedures in Chapter 2 of this manual.

In This Chapter

This chapter contains the following sections.

Section	See Page
Section A Initial Checkout	3-2
Section B Controls and Indicators	3-7
Section C Alarms	3-13

Section A
Initial Checkout

Overview

Introduction

Initial checkout provides a means of proving the operational readiness of the Laser Link III Mainframe or Laser Link Mini-Mainframe.

In This Section

This section contains the following topics.

Topic	See Page
Laser Link III Mainframe Initial Checkout	3-3
Laser Link Mini-Mainframe Initial Checkout	3-5

Laser Link III Mainframe Initial Checkout

Introduction

Initial checkout provides a means of proving the operational readiness of the Laser Link III Mainframe.

Important: Perform this procedure immediately following the installation of the mainframe and prior to the installation of additional Laser Link components.

Procedure

The following procedure contains individual step-by-step instructions to perform the initial checkout. Additional operational information is provided following the step-by-step instructions that may be useful as the unit remains in service over time. This procedure is valid for mainframes containing either the User Panel or the Element Management Interface Card (EMIC).

Follow these steps to perform the initial checkout procedure.

1.

IF the mainframe…	**THEN…**
is equipped with a redundant power supply	perform steps 2 and 3.
is NOT equipped with a redundant power supply	go to step 4.

2. If a redundant power supply is connected to the mainframe, place the Redundant Power/"B" Alarm switch on the Status Monitoring module in the ON position or place the Redundant Power/"B" Alarm switch on the EMIC module in the forward position.

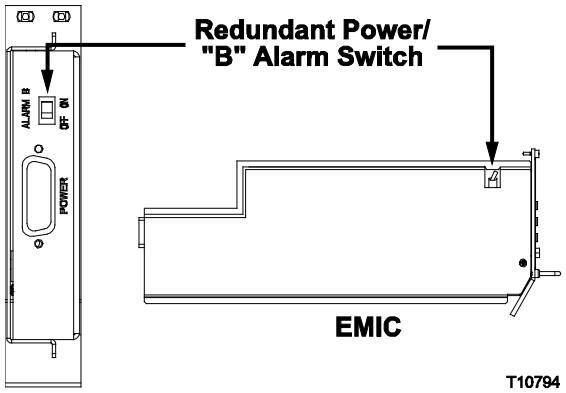

3. Apply power to the mainframe. On the Status Monitoring/EMIC module:
   - PWR A LED is lit green
   - PWR B LED is lit green
   - ALARM LED is extinguished

4. If the Laser Link III Mainframe is not equipped with a redundant power supply, perform the following steps; otherwise, the initial checkout for a mainframe with a redundant power supply is already complete.

   a. Place the Redundant Power/"B" Alarm switch on the Status Monitoring module to the OFF position. If the Laser Link III Mainframe is equipped with an EMIC, position the Redundant Power/"B" Alarm switch to the back position.

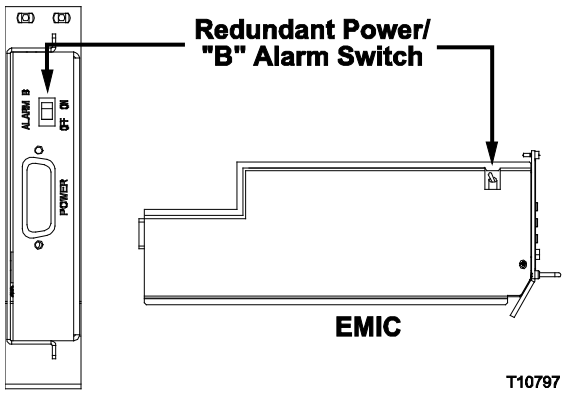

   b. Apply power to the Laser Link III Mainframe.

      On the Status Monitoring/EMIC module:

      - PWR A LED is lit green
      - PWR B LED is extinguished
      - ALARM LED is extinguished

Laser Link Mini-Mainframe Initial Checkout

Introduction

Initial checkout provides a means of proving the operational readiness of the Laser Link Mini-Mainframe.

Important: Perform this procedure immediately following the installation of the mainframe and prior to the installation of additional Laser Link components.

Procedure

The following procedure contains individual step-by-step instructions to perform the initial checkout.

1.

IF the mainframe…	THEN…
is equipped with a redundant power supply	perform steps 2 and 3.
is NOT equipped with a redundant power supply	go to step 4.

2. Clear the power supply B alarm, if present.

   Note: If power supply B is disconnected with power supply A present, the Mini-Mainframe will automatically indicate a power supply B alarm. Clear the alarm by turning off power supply A.

3. Apply power to the mainframe. On the Status Display Panel:
   - PWR A LED is lit green
   - PWR B LED is extinguished
   - ALARM LED is extinguished

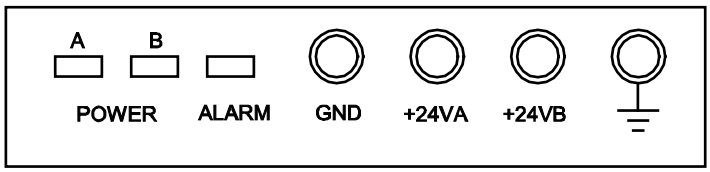

Status Display Panel T10798

4. If the Laser Link Mini-Mainframe is not equipped with a redundant power supply, perform the following step; otherwise, the initial checkout for a Mini-Mainframe with a redundant power supply is already complete.

   Apply power to the Laser Link Mini-Mainframe.

   On the Status Display Panel:

   - PWR A LED is lit green
   - PWR B LED is extinguished
   - ALARM LED is extinguished

Section B
Controls and Indicators

Overview

Introduction

This section describes the controls and indicators of the Laser Link III Mainframe and Laser Link Mini-Mainframe.

In This Section

This section contains the following topics.

Topic	See Page
Laser Link III Mainframe Controls and Indicators	3-8
Laser Link Mini-Mainframe Controls and Indicators	3-11

Laser Link III Mainframe Controls and Indicators

Overview

This illustrations show the Laser Link III Mainframe Status Monitoring module and EMIC module indicators and test points.

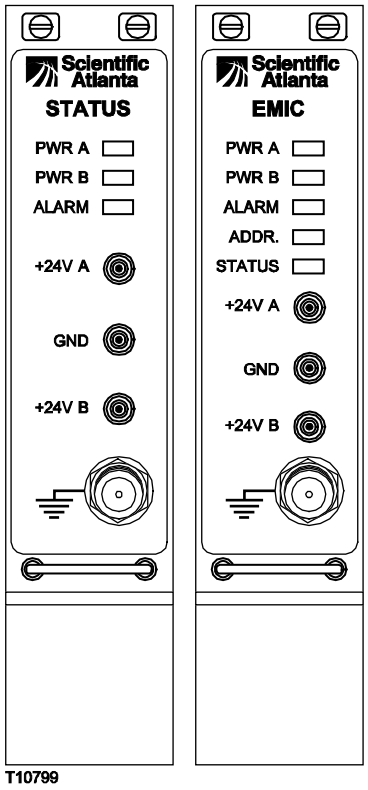

Status Monitoring Module

The following table describes the indicators and test points on the Status Monitoring module.

Indicator/Test Point	Description
PWR A LED	Indicates operational status of power supply A: • Green indicates proper operation • Red indicates a power supply A malfunction (voltage too high or too low) **Note:** Function is controlled by position of the Redundant Power/"B" Alarm switch.
PWR B LED	Indicates operation of a redundant power supply: • Green indicates proper operation • Red indicates a malfunction (voltage too high or too low) **Note:** If a redundant power supply is not present, the LED will be extinguished. Function is controlled by position of the Redundant Power/"B" Alarm switch.
ALARM LED	Indicates alarm condition: • Normally extinguished • Red indicates the presence of a general alarm condition with the power supplies or a housed module • Flashing red indicates fan failure
+24 V A Test Point	Test point for the output of power supply A.
GND Test Point	Ground point.
+24 V B Test Point	Test point for the output of power supply B.
Ground Symbol	Plug-in for electrostatic wrist strap. Use of an electrostatic wrist strap is recommended whenever plug-in modules are going to be removed.

EMIC Module

The following table describes the indicators and test points on the EMIC module.

Indicator/Test Point	Description
PWR A LED	Indicates operational status of power supply A: • Green indicates proper operation • Red indicates a power supply A malfunction (voltage too high or too low) **Note:** Function is controlled by position of the Redundant Power/"B" Alarm switch.
PWR B LED	Indicates operation of a redundant power supply: • Green indicates proper operation • Red indicates a malfunction (voltage too high/too low) **Note:** If a redundant power supply is not present, the LED will be extinguished. Function is controlled by position of the Redundant Power/"B" Alarm switch.
ALARM LED	Indicates alarm condition: • Normally extinguished • Red indicates the presence of a general alarm condition with the power supplies or a housed module • Flashing red indicates fan failure
ADDR. LED	Illuminates green as element management system software polls the EMIC. Expect intermittent illumination.
STATUS LED	Indicates operational status of the EMIC: • Normally extinguished • Red indicates a malfunction
+24 V A Test Point	Test point for the output of power supply A.
GND Test Point	Ground point.
+24 V B Test Point	Test point for the output of power supply B.
Ground Symbol	Plug-in for electrostatic wrist strap. Use of an electrostatic wrist strap is recommended whenever plug-in modules are going to be removed.

Laser Link Mini-Mainframe Controls and Indicators

Overview

This section describes operational information pertaining to the Status Display Panel that will be useful during the course of normal operation.

The following illustration shows the Status Display Panel indicators and test points.

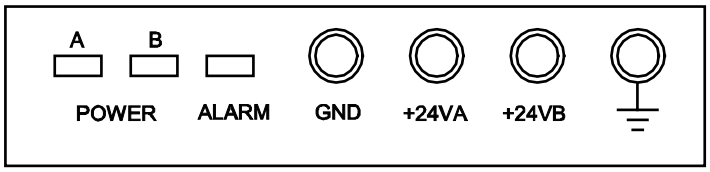

Status Display Panel T10798

Status Display Panel

The following table describes the indicators and test points on the Status Display Panel for all Mini-Mainframes.

Indicator/Test Point	Description
POWER A LED	Indicates operational status of power supply A: • Green indicates proper operation • Red indicates a power supply A malfunction (voltage too high or too low)
POWER B LED	Indicates operation of a redundant power supply: • Green indicates proper operation • Red indicates a power supply B malfunction (voltage too high or too low) **Note:** If a redundant power supply is not present, the LED will be extinguished.
ALARM LED	Indicates alarm condition: • Normally extinguished • Red indicates the presence of a general alarm condition with the power supplies or a housed module • Flashing red indicates fan failure
GND Test Point	Ground point.
+24 V A Test Point	Test point for the output of power supply A.
+24 V B Test Point	Test point for the output of power supply B.
Ground Symbol	Plug-in for electrostatic wrist strap. Use of an electrostatic wrist strap is recommended whenever plug-in modules are going to be removed.

Section C
Alarms

Overview

Introduction

The Laser Link III Mainframe and Laser Link Mini-Mainframe have module and mainframe level alarms (also known as vital signs) that are available on the power distribution board's telemetry connector(s) for interface with element management systems. The Laser Link modules are capable of producing alarms that are reported at the telemetry connector(s) by logic signals.

This section contains a summary of vital sign logic signals grouped by module type.

In This Section

This section contains the following topics.

Topic	See Page
Alarm Tables	3-14
Telemetry Connectors	3-25

Alarm Tables

1310 nm Forward Transmitters Alarm Table

Models (front panel label)	Description	Vital Sign VS#/Pin#	Vital Sign Description	Logic
LLII LLII+	Laser Link II identified by 2.4 mm pigtail	#1/#5	Redundant Power Alarm – active when module detects loss of +24 V DC "A" supply	0 V = normal +5 V = alarm
		#2	No connection on this module	No connection
		#3/#12	Laser Temp./Laser Bias – alarm when laser temperature or laser bias current is out of range	0 V = normal 5 V = alarm
		#4/#4	Global Alarm – any above condition and +5 or -5 V DC fails	24 V = normal 0 V = alarm
LLII LLII SP LLII+ LLII+LP LLII+SP LLII+HP	Laser Link II transmitters with 900 mm pigtail or rear panel optical connector	#1/#5	Redundant Power Alarm – active when module detects loss of +24 V DC "A" supply	0 V = normal +5 V = alarm
		#2	No connection on this module	No connection
		#3/#12	Laser Temp./Laser Bias – alarm when laser temperature or laser bias current is out of range	0 V = normal 5 V = alarm
		#4/#4	Global Alarm – any above condition and +5 or -5 V DC fails	24 V = normal 0 V = alarm

Models (front panel label)	Description	Vital Sign VS#/Pin#	Vital Sign Description	Logic
LLII LLII+SP LLII+HP	Laser Link II transmitters identified with a serial number starting with 45 and rear panel optical connector with fan, front panel gain adjust	#1/#5	Redundant Power Alarm – active when module detects loss of +24 V DC "A" supply	0 V = normal +5 V = alarm
		#2/#11	Optical Output Power	1 V/mW
		#3/#12	Laser Temp./Laser Bias – alarm when laser temperature or laser bias current is out of range	0 V = normal 5 V = alarm
		#4/#4	Global Alarm – any above condition	24 V = normal 0 V = alarm
LLT LP A7-E7 LLT MP F7-H7 LLT HP I7-J7	Laser Link LLT transmitters, single RF input 750 MHz, rear panel optical connector with fan, front panel slope and attenuator adjust controls, power and laser status LEDs	#1/#5	Redundant Power Alarm – active when module detects loss of +24 V DC "A" supply	0 V = normal +5 V = alarm
		#2/#11	Optical Output Power	1 V/mW
		#3/#12	Laser Bias Current	1 V/50 mA
		#4/#4	Global Alarm – optical power – 25%, "A" supply fails	24 V = normal 0 V = alarm
LLT LP A7D-E7D LLT MP F7D-H7D LLT HP I7D-J7D LLT LP A8D-E8D LLT MP F8D-H8D LLT HP I8D-J8D	Laser Link LLTxx-xxD dual RF input 750 and 870 MHz (two RF inputs) rear panel optical connector and fan, front panel slope and attenuator adjust controls, power and laser status LEDs	#1/#5	Redundant Power Alarm – active when module detects loss of +24 V DC "A" supply	0 V = normal +5 V = alarm
		#2/#11	Optical Output Power	1 V/mW
		#3/#12	Laser Bias Current	1 V/50 mA
		#4/#4	Global Alarm – +5 V DC fails, laser temp ±5%, laser bias current ±10%, optical power – 25%, "A" supply fails	24 V = normal 0 V = alarm

Models (front panel label)	Description	Vital Sign VS#/Pin#	Vital Sign Description	Logic
LLT LP A7D-E7D LLT MP F7D-H7D LLT HP I7D-J7D LLT LP A8D-E8D LLT MP F8D-H8D LLT HP I8D-J8D	Laser Link LLTxx-xxD, front panel optical connector, dual RF input 750 and 870 MHz (two RF inputs) rear panel fan, front panel slope and attenuator adjust controls, six LEDs	#1/#5	Redundant Power Alarm – active when module detects loss of +24 V DC "A" supply	0 V = normal +5 V = alarm
		#2/#11	Optical Output Power	1 V/mW
		#3/#12	Laser Bias Current	1 V/50 mA
		#4/#4	Global Alarm – +5 V DC fails, laser temp ±5%, laser bias current ±20%, optical power – 25%, "A" supply fails	24 V = normal 0 V = alarm
XMTR LLTIII-3-15	Laser Link half-width 45-870 MHz	#1/#5	Redundant Power Alarm – active when module detects loss of +24 V DC "A" supply	0 V = normal +5 V = alarm
		#2/#11	Optical Output Power	1 V/mW
		#3/#12	Laser Bias Current	1 V/50 mA
		#4/#4	Global Alarm – +5 V DC fails, laser temp ±5%, laser bias current ±20%, optical power – 25%, "A" supply fails, fan failure	24 V = normal 0 V = alarm

Models (front panel label)	Description	Vital Sign VS#/Pin#	Vital Sign Description	Logic
ELLT-3-14	Laser Link full-width 45-870 MHz, front panel optical connector, front panel slope and attenuator adjust controls	#1/#5	Redundant Power Alarm – active when module detects loss of +24 V DC "A" supply	0 V = normal +5 V = alarm
		#2/#11	Optical Output Power	1 V/mW
		#3/#12	Laser Bias Current	1 V/50 mA
		#4/#4	Global Alarm – +5 V DC fails, laser temp ±5%, laser bias current ±20%, optical power – 25%, "A" supply fails	24 V = normal 0 V = alarm

1550 nm Forward Transmitters Alarm Table

Models (front panel label)	Description	Vital Sign VS#/Pin#	Vital Sign Description	Logic
XMTR LEMT-P-10 LEMT-S-10 LEMT-I-10	Laser Link single-width transmitter, dual outputs	#1/#15	Redundant Power Alarm – active when module detects loss of +24 V DC "A" supply	0 V = normal +5 V = alarm
		#2/#5	Optical Output Power	1 V/mW
		#3/#6	Laser Bias Current	1 V/50 mA
		#4/#7	Global Alarm – +5 V DC fails, laser temp ±5%, laser bias current ±20%, optical power – 25%, "A" supply fails, fan failure	24 V = normal 0 V = alarm

1310 nm Reverse Transmitters Alarm Table

Models (front panel label)	Description	Vital Sign VS#/Pin#	Vital Sign Description	Logic
XMTR 5-200 MHz	Laser Link II return transmitter, rear panel optical connector	#1/#5	Redundant Power Alarm – active when module detects loss of +24 V DC "A" supply	0 V = normal +5 V = alarm
		#2	No connection on this module	No connection
		#3/#12	Laser Temp./Laser Bias – alarm when laser temperature or laser bias current is out of range	0 V = normal 5 V = alarm
		#4/#4	Global Alarm – any above condition and +5 or -5 V DC fails	24 V = normal 0 V = alarm
LLRT 5-210 MHz	Laser Link LLRT 5-210 MHz return transmitter, front panel optical connector, rear panel fan	#1/#5	Redundant Power Alarm – active when module detects loss of +24 V DC "A" supply	0 V = normal +5 V = alarm
		#2/#11	Optical Output Power	1 V/mW
		#3/#12	Laser Bias Current	1 V/50 mA
		#4/#4	Global Alarm – +5 V DC fails, laser temp ±5%, laser bias current ±20%, optical power – 25%, "A" supply fails	24 V = normal 0 V = alarm

Alarm Tables, Continued

Return Receivers Alarm Table

Models (front panel label)	Description	Vital Sign VS#/Pin#	Vital Sign Description	Logic
RCVR 5-200 MHz	Laser Link II full-width receiver module, 5-200 MHz, rear panel optical connector	#1/#5	Redundant Power Alarm – active when module detects loss of +24 V DC "A" supply	0 V = normal +5 V = alarm
		#2/#11	Optical Receive Power Alarm (< -17 dBm)	0 V = normal 5 V = alarm
		#3	No connection	No connection
		#4/#4	Global Alarm – any above condition	24 V = normal 0 V = alarm
LLRR 5-210 MHz	Laser Link half-width 5-210 MHz return receiver, front panel optical connector	#1/#5	Redundant Power Alarm – active when module detects loss of +24 V DC "A" supply	0 V = normal +5 V = alarm
		#2/#11	Optical Receive Power	1 V/mW
		#3/#12	Loss of RF Alarm (< +18 dBmV total power)	5 V = normal 0 V = alarm
		#4/#4	Global Alarm – optical receive power < -17 dBm, "A" supply fails	24 V = normal 0 V = alarm
LLDR 5-210 MHz	Laser Link half-width 5-210 MHz receiver, front panel optical connector	#1/#5	Redundant Power Alarm – active when module detects loss of +24 V DC "A" supply	0 V = normal +5 V = alarm
		#2/#11	Optical Receive Power	1 V/mW
		#3	No connection	No connection
		#4/#4	Global Alarm – optical receive power < -17 dBm, "A" supply fails	24 V = normal 0 V = alarm

Models (front panel label)	Description	Vital Sign VS#/Pin#	Vital Sign Description	Logic
ELLRR 5-210 MHz	Laser Link half-width 5-210 MHz receiver, front panel optical connector	#1/#5	Redundant Power Alarm – active when module detects loss of +24 V DC "A" supply	0 V = normal +5 V = alarm
		#2/#11	Optical Receive Power	1 V/mW
		#3	No connection	No connection
		#4/#4	Global Alarm – optical receive power < -17 dBm, "A" supply fails	24 V = normal 0 V = alarm

Amplifier Modules Alarm Table

Models (front panel label)	Description	Vital Sign VS#/Pin#	Vital Sign Description	Logic
AMP/4	Laser Link quad (4 outputs) 50-600 MHz and 50-750 MHz	#1/#5	Redundant Power Alarm – active when module detects loss of +24 V DC "A" supply	0 V = normal +5 V = alarm
AMP/FF	Feedforward (single output) 50-550 MHz amplifier	#2	No connection	No connection
		#3	No connection	No connection
AMP Dual	Laser Link dual amp (2 outputs), 50-750 MHz and 50-870 MHz	#4/#4	Global Alarm – "A" supply fails	24 V = normal 0 V = alarm

Models (front panel label)	Description	Vital Sign VS#/Pin#	Vital Sign Description	Logic
EDFA LLOA-C-14BM LLOA-C-17BM LLOA-C-20BM LLOA-C-22BM	Laser Link	#1/#15	Redundant Power Alarm – active when module detects loss of +24 V DC "A" supply	0 V = normal +5 V = alarm
		#2/#5	Optical Receive Power	0 V = -20 dBm 2.5 V = -5 dBm 5.0 V = +10dBm
		#3/#6	Optical Power Out	0 V = 6 dBm 2.4 V = 30 dBm 2.6 V = 6 dBm 5.0 V = 30 dBm
		#4/#7	Global Alarm – RPAN high, optical power alarm out of tolerance, laser bias alarm high, laser temp high, fan failure	24 V = normal 0 V = alarm

Forward Receivers Alarm Table

Models (front panel label)	Description	Vital Sign VS#/Pin#	Vital Sign Description	Logic
RCVR 50-550 MHz	Laser Link II full-width receiver module, 50-550 MHz, rear panel optical connector	#1/#5	Redundant Power Alarm – active when module detects loss of +24 V DC "A" supply	0 V = normal +5 V = alarm
		#2/#11	Optical Receive Power Alarm (< -17 dBm)	0 V = normal 5 V = alarm
RCVR EAW32 50-750 MHz	Laser Link II full-width receiver module, 50-750 MHz, rear panel optical connector	#3	No connection	No connection
		#4/#4	Global Alarm – any above condition	24 V = normal 0 V = alarm

Models (front panel label)	Description	Vital Sign VS#/Pin#	Vital Sign Description	Logic
LLFR	Laser Link full-width 50-750 MHz and 45-870 MHz forward receiver, front panel optical connector	#1/#5	Redundant Power Alarm – active when module detects loss of +24 V DC "A" supply	0 V = normal +5 V = alarm
		#2/#11	Optical Receive Power	1 V/mW
		#3/#12	Loss of RF Alarm (< +31 dBmV total power)	5 V = normal 0 V = alarm
		#4/#4	Global Alarm – optical receive power < -10 dBm, "A" supply fails	24 V = normal 0 V = alarm

1550 nm DFB Forward Transmitters Alarm Table

Models (front panel label)	Description	Vital Sign VS#/Pin#	Vital Sign Description	Logic
LLNT	Laser Link LLNT 750 MHz and 870 MHz 1550 nm transmitter for DWDM applications	#1/#5	Redundant Power Alarm – active when module detects loss of +24 V DC "A" supply	0 V = normal +5 V = alarm
		#2/#11	Optical Output Power	1 V/mW
		#3/#12	Laser Bias Current	1 V/50 mA
		#4/#4	Global Alarm – +5 V DC fails, laser temp ±5%, laser bias current ±10%, optical power – 25%, "A" supply fails	24 V = normal 0 V = alarm

1550 nm DFB Reverse Transmitters Alarm Table

Models (front panel label)	Description	Vital Sign VS#/Pin#	Vital Sign Description	Logic
LLNTR	Laser Link LLNTR 5-210 MHz 1550 nm reverse transmitter for DWDM applications	#1/#5	Redundant Power Alarm – active when module detects loss of +24 V DC "A" supply	0 V = normal +5 V = alarm
		#2/#11	Optical Output Power	1 V/mW
		#3/#12	Laser Bias Current	1 V/50 mA
		#4/#4	Global Alarm – +5 V DC fails, laser temp ±5%, laser bias current ±10%, optical power – 25%, "A" supply fails	24 V = normal 0 V = alarm

Switch Module Alarm Table

Models (front panel label)	Description	Vital Sign VS#/Pin#	Vital Sign Description	Logic
LLRS	Laser Link LLRS RF switch, half-width module	#1/#5	Redundant Power Alarm – active when module detects loss of +24 V DC "A" supply	0 V = normal +5 V = alarm
		#2/#11	Switch Mode	0 V = auto mode 5 V = local mode
		#3/#12	Switch position "x" port connected to common port	0 V = A 5 V = B
		#4/#4	Global Alarm – "A" supply fails switch position B, switch failure	24 V = normal 0 V = alarm

Alarm Tables, Continued

Block Converters Alarm Table

Models (front panel label)	Description	Vital Sign VS#/Pin#	Vital Sign Description	Logic
LLUC-65 LLDC-65	Laser Link block upconverter and downconverter, 5-65 MHz	#1/#5	Redundant Power Alarm – active when module detects loss of +24 V DC "A" supply	0 V = normal +5 V = alarm
LLUC-40 LLDC-40	Laser Link block upconverter and downconverter, 5-42 MHz	#4/#4	Global Alarm – loss of phase lock for any PLL, fan failure, "A" supply fails	24 V = normal 0 V = alarm

Telemetry Connectors

J9A and J9B Connector Pinout

The following table shows the pinout data for J9A and J9B, the telemetry connectors, on the Laser Link III Mainframe.

J9A Pin#	Connection	J9B Pin #	Connection
1	GND	1	GND
2	Analog 1 Slot 7A	2	Analog 1 Slot 7B
3	Analog 2 Slot 7A	3	Analog 2 Slot 7B
4	RPAN Slot 7A	4	RPAN Slot 7B
5	Analog 1 Slot 6A	5	Analog 1 Slot 6B
6	Analog 2 Slot 6A	6	Analog 2 Slot 6B
7	RPAN Slot 6A	7	RPAN Slot 6B
8	Analog 1 Slot 5A	8	Analog 1 Slot 5B
9	Analog 2 Slot 5A	9	Analog 2 Slot 5B
10	RPAN Slot 5A	10	RPAN Slot 5B
11	No Connect	11	No Connect
12	RPAN Slot 4A	12	RPAN Slot 4B
13	+24 V A Supply	13	+24 V A Supply
14	Analog 1 Slot 1A	14	Analog 1 Slot 1B
15	Analog 2 Slot 1A	15	Analog 2 Slot 1B
16	RPAN Slot 1A	16	RPAN Slot 1B
17	Analog 1 Slot 2A	17	Analog 1 Slot 2B
18	Analog 2 Slot 2A	18	Analog 2 Slot 2B
19	RPAN Slot 2A	19	RPAN Slot 2B
20	Analog 1 Slot 3A	20	Analog 1 Slot 3B
21	Analog 2 Slot 3A	21	Analog 2 Slot 3B
22	RPAN Slot 3A	22	RPAN Slot 3B
23	Analog 1 Slot 4A	23	Analog 1 Slot 4B
24	Analog 2 Slot 4A	24	Analog 2 Slot 4B
25	+24 V B Supply	25	+24 V B Supply

Chapter 4
Customer Information

Overview

Introduction

If you have technical questions, call Cisco Services for assistance. Follow the menu options to speak with a service engineer.

Access your company's extranet site to view or order additional technical publications. For accessing instructions, contact the representative who handles your account. Check your extranet site often as the information is updated frequently.

Cisco Systems, Inc.
5030 Sugarloaf Parkway, Box 465447
Lawrenceville, GA 30042

678 277-1120
800 722-2009
www.cisco.com

This document includes various trademarks of Cisco Systems, Inc. Please see the Notices section of this document for a list of the Cisco Systems, Inc. trademarks used in this document.
Product and service availability are subject to change without notice.

© 2008, 2012 Cisco and/or its affiliates.
All rights reserved.

October 2012 Printed in USA

Part Number 78-4004177-01 Rev D