Cisco DSAN System

Installation & Configuration Guide

For Your Safety

Explanation of Warning and Caution Icons

Avoid personal injury and product damage! Do not proceed beyond any symbol until you fully understand the indicated conditions.

The following warning and caution icons alert you to important information about the safe operation of this product:

You may find this symbol in the document that accompanies this product. This symbol indicates important operating or maintenance instructions.

You may find this symbol affixed to the product. This symbol indicates a live terminal where a dangerous voltage may be present; the tip of the flash points to the terminal device.

You may find this symbol affixed to the product. This symbol indicates a protective ground terminal.

You may find this symbol affixed to the product. This symbol indicates a chassis terminal (normally used for equipotential bonding).

You may find this symbol affixed to the product. This symbol warns of a potentially hot surface.

You may find this symbol affixed to the product and in this document. This symbol indicates an infrared laser that transmits intensity-modulated light and emits invisible laser radiation or an LED that transmits intensity-modulated light.

Important

Please read this entire guide. If this guide provides installation or operation instructions, give particular attention to all safety statements included in this guide.

Notices

Trademark Acknowledgments

Cisco and the Cisco logo are trademarks or registered trademarks of Cisco and/or its affiliates in the U.S. and other countries. To view a list of Cisco trademarks, go to this URL: **www.cisco.com/go/trademarks**.

Third party trademarks mentioned are the property of their respective owners.

The use of the word partner does not imply a partnership relationship between Cisco and any other company. (1110R)

Publication Disclaimer

Cisco Systems, Inc. assumes no responsibility for errors or omissions that may appear in this publication. We reserve the right to change this publication at any time without notice. This document is not to be construed as conferring by implication, estoppel, or otherwise any license or right under any copyright or patent, whether or not the use of any information in this document employs an invention claimed in any existing or later issued patent.

Copyright

© 2009-2013 Cisco and/or its affiliates. All rights reserved.

Information in this publication is subject to change without notice. No part of this publication may be reproduced or transmitted in any form, by photocopy, microfilm, xerography, or any other means, or incorporated into any information retrieval system, electronic or mechanical, for any purpose, without the express permission of Cisco Systems, Inc.

Contents

Cisco DSAN Product Notices

Open Source GNU GPL Statement

The Cisco Digital Service Access Node (DSAN) contains, in part, certain free/open source software ("Free Software") under licenses which generally make the source code available for free copy, modification, and redistribution. Examples of such licenses include all the licenses sponsored by the Free Software Foundation (e.g. GNU General Public License (GPL), GNU Lesser General Public License (LGPL), Berkeley Software Distribution (BSD), the MIT licenses and different versions of the Mozilla and Apache licenses). To find additional information regarding the Free Software, including a copy of the applicable license and related information, please go to **www.cisco.com/go/dsan_licensing**. Once at the site, search for the applicable open source document. If you have any questions or problems accessing any of the links, please contact: spvtg-external-opensource-requests@cisco.com.

Important Safety Instructions

Read and Retain Instructions

Carefully read all safety and operating instructions before operating this equipment, and retain them for future reference.

Follow Instructions and Heed Warnings

Follow all operating and use instructions. Pay attention to all warnings and cautions in the operating instructions, as well as those that are affixed to this equipment.

Terminology

The terms defined below are used in this document. The definitions given are based on those found in safety standards.

Service Personnel - The term *service personnel* applies to trained and qualified individuals who are allowed to install, replace, or service electrical equipment. The service personnel are expected to use their experience and technical skills to avoid possible injury to themselves and others due to hazards that exist in service and restricted access areas.

User and Operator - The terms *user* and *operator* apply to persons other than service personnel.

Ground(ing) and Earth(ing) - The terms *ground(ing)* and *earth(ing)* are synonymous. This document uses ground(ing) for clarity, but it can be interpreted as having the same meaning as earth(ing).

Electric Shock Hazard

Because of the potential for higher humidity, the presence of moisture, the proximity to ground potential and the possibility that hazardous voltages may be present on network connected cables, there is a greater risk of electric shock when working with electronic equipment in the outdoor environment.

To minimize the likelihood and effect of electric shock, follow the instructions in this warning and the precautions below.

WARNING:

To reduce risk of electric shock, perform only the instructions that are included in the operating instructions. Refer all servicing to qualified service personnel only.

- Do not work in rain, fog or snow conditions.
- Ensure equipment and cables are dry.
- Wear shoes with soles made of insulated material e.g. rubber, vinyl, etc.
- When making electrical connections, work with one hand in your pocket and avoid accidental contact with grounded surfaces.
- Use insulated tools to make electrical connections.
- Make all other connections before connecting power to the equipment.

Installation

This equipment should be installed by qualified service personnel and should comply with national and local requirements.

Note to the Installer

Note to CATV System Installer (U.S.A. and Canada Only)

This reminder is provided to call the CATV system installer's attention to Article 820-40 of the NEC (Section 54, Part I of the Canadian Electrical Code), that provides guidelines for proper grounding and, in particular, specifies that the CATV cable ground shall be connected to the grounding system of the building, as close to the point of cable entry as practical.

CAUTION

RISK OF ELECTRIC SHOCK
DO NOT OPEN

AVIS

RISQUE DE CHOC ÉLECTRIQUE
NE PAS OUVRIR

CAUTION: To reduce the risk of electric shock, do not remove cover (or back). No user-serviceable parts inside. Refer servicing to qualified service personnel.

WARNING

TO PREVENT FIRE OR ELECTRIC SHOCK, DO NOT EXPOSE THIS UNIT TO RAIN OR MOISTURE.

This symbol is intended to alert you that uninsulated voltage within this product may have sufficient magnitude to cause electric shock. Therefore, it is dangerous to make any kind of contact with any inside part of this product.

This symbol is intended to alert you of the presence of important operating and maintenance (servicing) instructions in the literature accompanying this product.

Equipment Placement

WARNING:

Avoid personal injury and damage to this equipment. An unstable mounting surface may cause this equipment to fall.

To protect against equipment damage or injury to personnel, comply with the following:

- If this equipment uses AC power, place this equipment close enough to a mains AC outlet to accommodate the length of this equipment's power cord.
- Route all power cords so that people cannot walk on, place objects on, or lean objects against them. This may pinch or damage the power cords. Pay particular attention to power cords at plugs, outlets, and the points where the power cords exit this equipment.
- Make sure the mounting surface or rack is stable and can support the size and weight of this equipment.

Outdoor Equipment Placement

Cisco equipment intended for outdoor installation is designed to be water-resistant, not water-proof. To protect against equipment damage or injury to personnel, install outdoor equipment so that it is:

- Protected from rain or accumulations of snow as much as possible.
- Not subject to direct water jets from sprinkler systems or garden hoses.
- Not subject to flooding.
- Positioned with cable connectors on the underside to minimize water entry by gravity.

Outdoor Equipment Cabling

To protect outdoor equipment cables, comply with the following:

- Protect cables from chaffing and sharp edges when routing them through building walls or around corners.
- Provide adequate support for cables to prevent strain or sagging.
- Provide a low loop in the cable close to its connection point to the equipment to minimize water ingress and to provide strain relief for the connector.
- Seal outdoor cable/connector joints against moisture ingress using silicone caulk or outdoor sealing tape.

Ventilation

WARNING:

Avoid electric shock and fire hazard! Never push objects through the openings in this equipment. Foreign objects can touch dangerous voltage points or cause electrical shorts that can result in electric shock or fire.

This equipment may have openings for ventilation that protect it from overheating. To ensure the reliability of this equipment, do not obstruct the openings.

- Do not place other equipment, lamps, books, or other objects on top of this equipment.
- Do not place this equipment in any of the following locations.
  - On a bed, sofa, rug, or similar surface
  - Over a radiator or a heat register
  - In an enclosure, such as a bookcase or equipment rack, unless the installation provides proper ventilation

Handling Precautions

When moving a cart that contains this equipment, check for any of the following possible hazards:

WARNING:

Avoid personal injury and damage to this equipment! Move any equipment and cart combination with care. Quick stops, excessive force, and uneven surfaces may cause this equipment and cart to overturn.

Cleaning the Equipment

Before cleaning this equipment, disconnect it from its electrical power source. Use a damp cloth to clean this equipment. Do not use a liquid cleaner or an aerosol cleaner. Do not use a magnetic/static cleaning device (dust remover) to clean this equipment.

Object and Liquid Entry

Never push objects of any kind into this equipment through openings, as they may touch dangerous voltage points or short out parts that could result in a fire or electric shock. Do not expose this equipment to liquid or moisture. Do not place this equipment on a wet surface. Do not spill liquids on or near this equipment.

Overloading

For equipment that uses AC power, do not overload electrical outlets, extension cords, or integral convenience receptacles, as this can result in a risk of fire or electric shock. For equipment that requires battery power or other sources to operate, refer to the operating instructions for that equipment.

Lightning and Power Surges

To protect this equipment against damage from lightning storms and power-line surges, do the following where applicable:

- Disconnect the power cord from the grounded mains electrical outlet and disconnect the antenna or cable system under the following circumstances.
  - During lightning storms, or
  - When you are not using this equipment for an extended period
- Ground your antenna system to provide some protection against voltage surges and built-up static charge.

Power Sources

WARNING:

Avoid electric shock and fire hazard! Do not overload electrical outlet and extension cords. For equipment that requires battery power or other sources to operate, refer to the operating instructions for that equipment.

- A label on this equipment indicates the correct power source for this equipment. If this equipment uses AC power, operate this equipment only from an electrical outlet with the voltage and frequency indicated on the equipment label.
- If this equipment plugs into an outlet, the outlet must be near this equipment, and must be easily accessible.
- This equipment may have two power sources. Be sure to disconnect all power sources before working on this equipment.
- If this equipment **does not** have a main power switch, the power cord connector serves as the disconnect device.
- Always pull on the plug or the connector to disconnect a cable. Never pull on the cable itself.
- Unplug this equipment if it will be unused for long periods of time.
- If you are uncertain of the type of power supply to your home or business, consult your local power company.

Grounding

This section provides instructions for verifying that the equipment is properly grounded.

Safety Plugs (USA Only)

If this equipment uses AC power, it may be equipped with either a 3-terminal (grounding-type) safety plug or a 2-terminal (polarized) safety plug. The wide blade or the third terminal is provided for safety. Do not defeat the safety purpose of the grounding-type or polarized safety plug.

To properly ground this equipment, follow these safety guidelines:

- **Grounding-Type Plug -** For a 3-terminal plug (one terminal on this plug is a protective grounding pin), insert the plug into a grounded mains, 3-terminal outlet.

  Note: This plug fits only one way. If this plug cannot be fully inserted into the outlet, contact an electrician to replace the obsolete 3-terminal outlet.

- **Polarized Plug -** For a 2-terminal plug (a polarized plug with one wide blade and one narrow blade), insert the plug into a polarized mains, 2-terminal outlet in which one socket is wider than the other.

  Note: If this plug cannot be fully inserted into the outlet, try reversing the plug. If the plug still fails to fit, contact an electrician to replace the obsolete 2-terminal outlet.

Grounding Terminal

If this equipment is equipped with an external grounding terminal, attach one end of an 18-gauge wire (or larger) to the grounding terminal; then, attach the other end of the wire to a ground, such as a grounded equipment rack.

Safety Plugs (European Union)

- **Class I Mains Powered Equipment –** Provided with a 3-terminal AC inlet and requires connection to a 3-terminal mains supply outlet via a 3-terminal power cord for proper connection to the protective ground.

  Note: The equipotential bonding terminal provided on some equipment is not designed to function as a protective ground connection.

- **Class II Mains Powered Equipment –** Provided with a 2-terminal AC inlet that may be connected by a 2-terminal power cord to the mains supply outlet. No connection to the protective ground is required as this class of equipment is provided with double or reinforced and/or supplementary insulation in addition to the basic insulation provided in Class I equipment.

  Note: Class II equipment, which is subject to EN 50083-1, is provided with a chassis-mounted equipotential bonding terminal. See the section titled **Equipotential Bonding** for connection instructions.

Equipotential Bonding

If this equipment is equipped with an external chassis terminal marked with the IEC 60417-5020 chassis icon (⏚), the installer should refer to CENELEC standard EN 50083-1 or IEC standard IEC 60728-11 for correct equipotential bonding connection instructions.

Outdoor Grounding System

If this equipment connects to an outdoor antenna or cable system, be sure the antenna or cable system is grounded. This provides some protection against voltage surges and built-up static charges.

Section 810 of the National Electric Code (NEC), ANSI/NFPA No. 70-1999, provides the following information:

- Grounding of the mast and supporting structure
- Grounding the lead-in wire to an antenna discharge unit
- Size of the grounding conductors
- Location of the antenna-discharge unit
- Connection to grounding electrodes
- Requirements for the grounding electrodes

For European Union countries, refer to CENELEC standard EN 50083-1 for grounding information.

Example Of Antenna Grounding

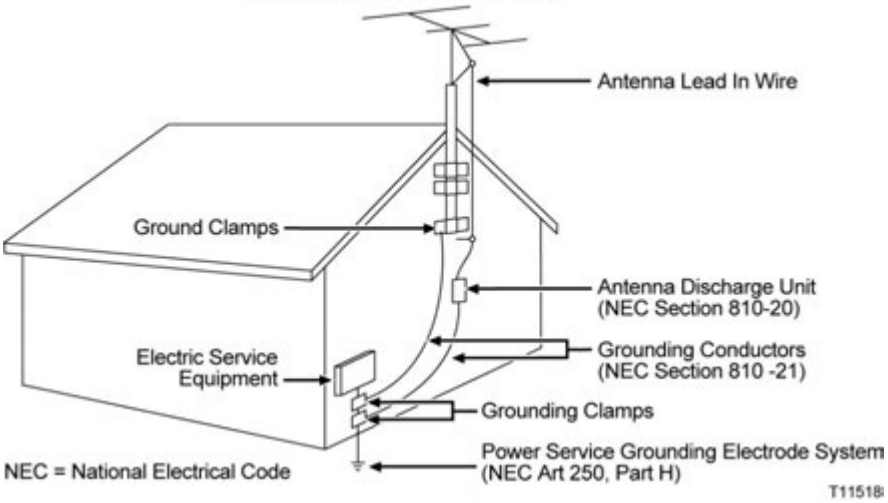

Servicing

WARNING:

Avoid electric shock! Opening or removing this equipment's cover may expose you to dangerous voltages.

Do not open the cover of this equipment. Refer all servicing to qualified personnel only. Contact us for instructions.

Damage that Requires Service

For damage that requires service, disconnect this equipment from its electrical power source. Refer service to qualified service personnel when any of the following occurs:

- There is damage to the power cord or plug.
- Liquid enters the equipment.
- A heavy object falls on the equipment.
- Operation is not normal (the instructions in this manual describe the proper operation).
- You drop this equipment, or damage the cabinet of this equipment.
- This equipment exhibits a distinct change in performance.

Upon completion of any service or repairs to this equipment, ask the service technician to perform safety checks to determine that the equipment is in proper operating condition.

CAUTION:

Avoid damage to this equipment! Adjust only what the operating instructions describe. Improper adjustment of controls may result in damage that may require extensive corrective work by qualified service personnel.

Replacement Parts

When replacement parts are required, be sure the qualified service personnel has used parts specified by the manufacturer or have the same characteristics as the original part. Unauthorized substitutions may result in fire, electric shock, or other hazards.

Safety Check

Upon completion of any service or repairs to this equipment, ask the service technician to perform safety checks to determine that this equipment is in proper operating condition.

Modifications

This equipment has been designed and tested to comply with applicable safety, laser safety, and EMC regulations, codes, and standards to ensure safe operation in its intended environment. Refer to this equipment's data sheet for details about regulatory compliance approvals.

Do not make modifications to this equipment. Any changes or modifications could void the user's authority to operate this equipment.

Modifications have the potential to degrade the level of protection built into this equipment, putting people and property at risk of injury or damage. Those persons making any modifications expose themselves to the penalties arising from proven non-compliance with regulatory requirements and to civil litigation for compensation in respect of consequential damages or injury.

Accessories

Use only attachments or accessories specified by the manufacturer.

CAUTION:

Maintain electrical safety! Power-operated equipment or accessories that you connect to this equipment should bear the UL listing mark or CSA certification mark on the accessory itself, and should not be modified so as to defeat the safety features. This will help avoid any potential for electric shock or fire. If in doubt, contact qualified service personnel.

Mounting Accessories

CAUTION:

Use this equipment only with a cart, stand, bracket, table, or other mounting accessories that meet Cisco specifications. Carefully follow all instructions for proper mounting.

Electromagnetic Compatibility Regulatory Requirements

This equipment meets applicable electromagnetic compatibility (EMC) regulatory requirements. Refer to this equipment's data sheet for details about regulatory compliance approvals. EMC performance is dependent upon the use of correctly shielded cables of good quality for all external connections, except the power source, when installing this equipment.

- Ensure compliance with cable/connector specifications and associated installation instructions where given elsewhere in this manual.

Otherwise, comply with the following good practices:

- Multi-conductor cables should be of double-braided shielded type and have

conductive connector bodies and backshells with cable clamps that are conductively bonded to the backshell and capable of making 360° connection to the cable shielding. Exceptions from this general rule will be clearly stated in the connector description for the excepted connector in question.

- Ethernet cables should be of the double-shielded type.
- Coaxial cables should be of the double-braided shielded type.

EMC Compliance Statements

Where this equipment is subject to USA FCC and/or Industry Canada rules, the following statements apply:

FCC Declaration of Conformity

This device complies with *Part 15 of FCC Rules*. Operation is subject to the following two conditions: 1) The device may not cause harmful interference, and 2) The device must accept any interference received, including interference that may cause undesired operation.

FCC Statement for Class B Equipment

This equipment has been tested and found to comply with the limits for a Class B digital device, pursuant to Part 15 of the FCC Rules. These limits are designed to provide reasonable protection against harmful interference in a residential installation.

This equipment generates, uses, and can radiate radio frequency energy and, if not installed and used in accordance with the instructions, may cause harmful interference to radio communications. However, there is no guarantee that interference will not occur in a particular installation. If this equipment does cause harmful interference to radio or television reception, which can be determined by turning the equipment off and on, the user is encouraged to try to correct the interference by one or more of the following measures:

- Reorient or relocate the receiving antenna.
- Increase the separation between the equipment and receiver.
- Connect the equipment into an outlet on a circuit different from that to which the receiver is connected.
- Consult the dealer or an experienced radio/TV technician for help.

Industry Canada - Industrie Canadiene Statement

This apparatus complies with Canadian ICES-003.
Cet appareil est confome à la norme NMB-003 du Canada.

1

Quick Start Guide

Introduction

This chapter provides streamlined step-by-step instructions for installing and configuring the Cisco DSAN system. Later chapters of this guide provide more detailed information on system design, operation, and maintenance.

In This Chapter

Step 1: Confirm Headend Support

Network control of DSAN operation, like that of cable modems, is performed remotely and automatically from the headend. For this process to work, the headend equipment and software must be configured as described below.

DNCS

- DNCS with SR4.3 must be installed at the headend.
- CMTS Bridges must be set up for ADSG operation, as follows:
  - CMTS Bridge (Advanced DSG) for SFM normal data flow
  - CMTS Bridge (Advanced DSG with BT Headers) for SFM SI SCTE-65 data flow
  - CMTS Bridge (Advanced DSG with BT Headers) for SFM EAS SCTE-18 data flow
- Device types must be inserted into customer EMM files in DNCS and the certificate loaded on DNCS.

CMTS

- CMTS with software that supports ADSG must be installed at the headend.
- The CMTS must be set up for out of band (OOB) Bridge (Tunnel) operation, as follows:
  - For Traditional Data Tunnel, the client list must include the CA system ID (0xE00).
  - For SCTE-65 (SI) Data Tunnel, no special configuration is required.
  - For SCTE-18 (EAS) Data Tunnel, no special configuration is required.

DHCP Server

The DHCP server must issue DHCP Offer and Ack to the embedded cable modem (eCM) for each DSAN. The DHCP Offer and Ack contains the name and TFTP location of the eCM configuration file.

The DHCP server must also issue DHCP Offer and Ack to the embedded host (eHost) for each DSAN. The DHCP server must issue DHCP Offer and Ack with mandatory options 1, 3, 6, 15, 51, 54, 66, and 67 enabled. The DSAN verifies the existence of these fields within the DHCP Offer and Ack. If any of these DHCP fields are absent, the DSAN must reject the offered lease and restart its DHCP IP acquisition process.

DHCP option 66 is the IP address of the TFTP server that contains the configuration file for the DSAN. DHCP option 67 is the bootfile, which is the name of the configuration file that the DSAN loads from the TFTP server. Together, these options tell the DSAN where to find the configuration file needed to provision the unit.

The DSAN configuration file contains the VCT ID (hub ID). In order for the DSAN to obtain the correct SI data, the VCT ID for the cable plant that the DSAN is connected to must be correct. Otherwise, the DSAN cannot build the Source ID-to-EIA Output Channel map.

For additional information, see ***Confirming Headend Support*** (on page 59).

Step 2: Install Hardware

After configuring the DSAN for your installation, complete the following procedures to install the unit. For additional details, see ***Hardware Installation*** (on page 31).

Wall or Rack Mounting

Complete the following steps to install the DSAN housing on a wall or in a 19-inch equipment rack.

1 Carefully select and prepare the area to receive the DSAN unit.

- Consider the weight of the DSAN unit itself, the mounting bracket, and all attached cabling and accessories.
- Consider any possible accidental impact from passing foot traffic or moving objects. Avoid mounting the unit in high traffic areas.
- Consider any additional stress that may be placed on the mounting surface and hardware by accidental snagging of attached cabling.
- When mounting the unit on a wall, choose a location that allows for mounting into studs. Pre-drill pilot holes into the studs for four 5/16 x 2-inch (minimum length) lag bolts. Use the mounting bracket, part number 4028925, as a guide.
- When mounting the unit in a rack, note that the height of the mounting bracket occupies 14 in. (35.6 cm) or 8 rack units.

2 Remove the two self-tapping bolts from the strand clamps. Set the bolts and strand clamps aside.

3 Place a lock washer and a flat washer on each self-tapping strand clamp bolt, arranged so that the lock washer is directly under the head of each bolt.

4 Pass the self-tapping bolts with washers through the mounting bracket, part number 4028925, and into the back of the housing as shown in the following illustration. Torque the self-tapping bolts from 8 to 10 ft-lb (10.8 to 13.6 Nm).

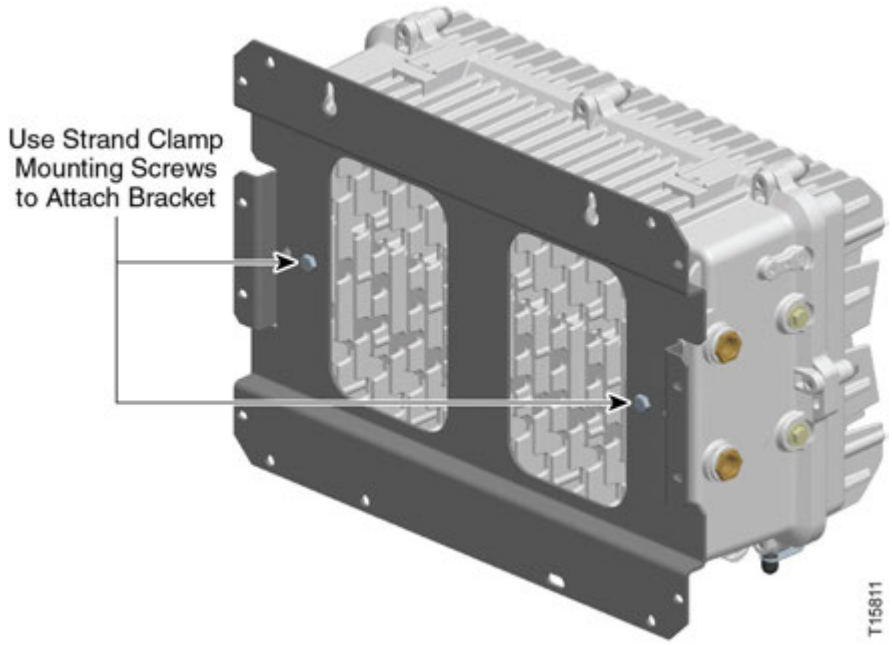

5 Position the housing on the wall or in the rack.

6 Secure the mounting bracket to the wall or rack as follows:

- For wall mounting, use four 5/16-inch lag bolts of sufficient length to allow a minimum 2-inch thread engagement with the studs. Torque the mounting bolts from 8 to 10 ft-lb (10.8 to 13.6 Nm).
- For rack mounting, use eight #10 x 32 machine screws and compatible nuts. The screws should be long enough to extend at least two threads beyond the outer face of the nut. Torque the screws from 25 to 30 in-lb (2.8 to 3.4 Nm).

7 Connect the coaxial cable to the pin connector according to connector manufacturer specifications.

8 Proceed to ***Installing Accessories*** (on page 44).

Cabinet or Strand Mounting

Complete the following steps to install the DSAN unit on a strand or in a cabinet or pedestal enclosure.

Note: The housing does not need to be opened for strand, cabinet, or pedestal installation.

Important: The minimum strand diameter should be 5/16 inch.

CAUTION:

Be aware of the size and weight of the node while strand mounting. Ensure that the strand can safely support the weight of the node (approximately 50 lbs or 22.7 kg).

1. When mounting in a cabinet or pedestal, install a horizontal rod of at least 5/16-inch diameter to serve as a strand to mount the housing.
2. Loosen the strand clamp bolts on the DSAN unit.
3. Lift the housing into proper position on the strand.
4. Slip the strand clamps over the strand and finger-tighten the clamp bolts. This allows additional movement of the housing as needed.
5. Move the housing along the strand as needed to install the coaxial cable and connectors.

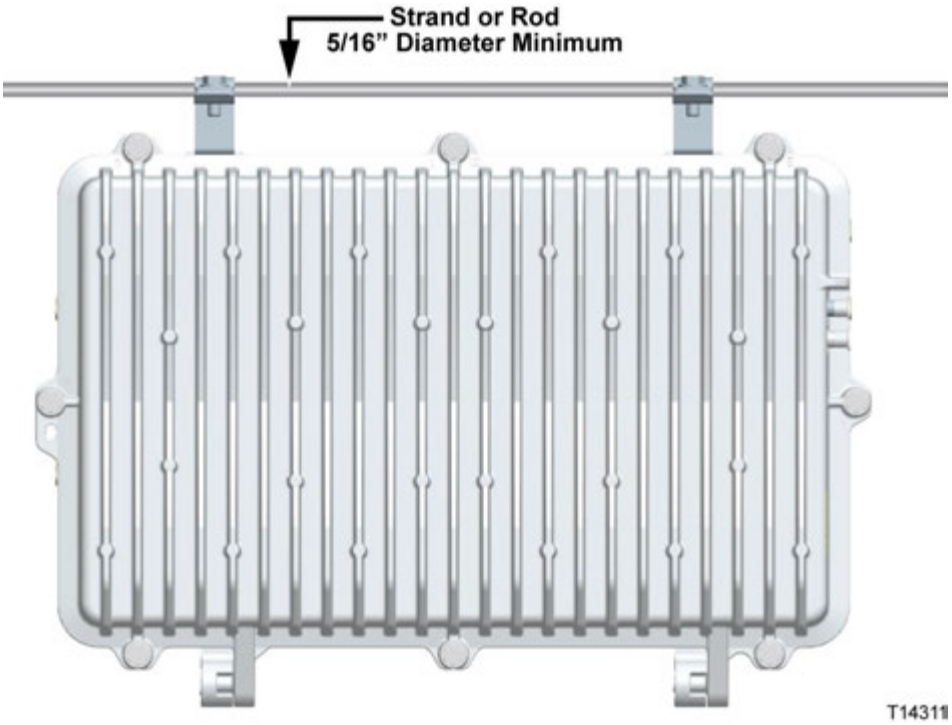

Note: If supplying power to the node through the AC power input port, a power inserter must be installed to terminate the RF signal.

6. Tighten the strand clamp bolts (using a half-inch torque wrench) from 5 to 8 ft-lb (6.8 to 10.8 Nm). Make sure there is good mechanical contact between the strand and the housing.

   Note: A slight tilt of the face of the housing is normal. Cable tension will cause the housing to hang more closely to vertical.
7. Connect the coaxial cable to the pin connector according to connector manufacturer specifications.

8 Proceed to ***Installing Accessories*** (on page 44).

To Connect the Coaxial Pin Connector

Complete the following steps for each coaxial pin connector to be attached to the node housing.

1 Check the length and condition of the coaxial cable pin. The pin must be straight, and the tip must be smooth with no burrs. The pin must measure 1.5 to 1.6 inches long (3.8 to 4.1 cm) from the tip to the base of the connector threads at the o-ring location. Use the cutting length guide on the housing base for reference, as shown below.

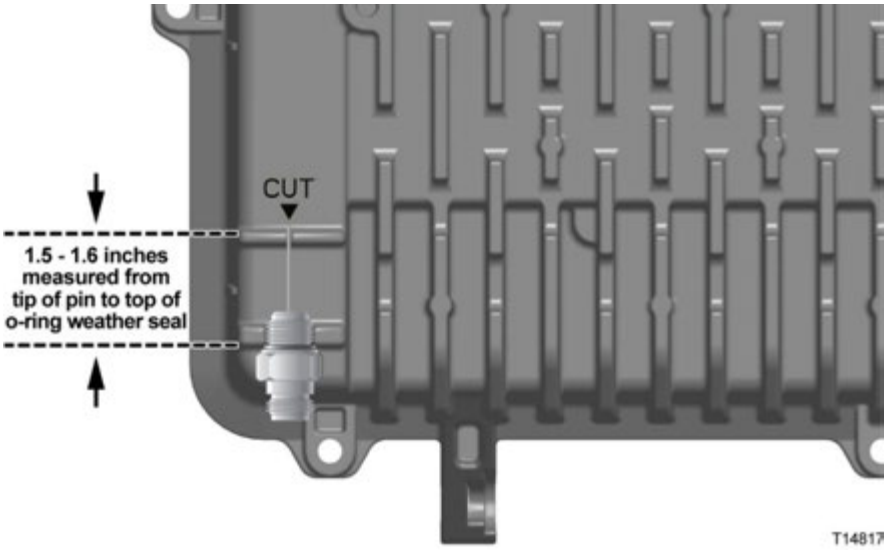

Important: The pin must meet the minimum length specified so the tip will engage the seizure inside the housing before the connector threads engage the housing. The pin must not exceed the maximum length in order to maintain proper product performance.

If necessary, trim the pin using heavy-duty wire cutters, and then file the tip smooth.

Note: Centering the pin length at 1.55 inches (3.95 cm) may make connector installation easier. A common approach is to cut the pin 1/16 inch (1.6 mm) longer than the cut guide on the housing.

2 Insert the coaxial connector into the housing at the desired housing port. The tip of the pin should engage the spring-loaded seizure.

Note: It may help to twist the connector back and forth slightly while pressing in against the seizure to get the tip of the pin to engage.

3. Tighten the connector nut according to manufacturer specifications.

   Note: When using a small connector, use a 3/4-inch socket for increased leverage when tightening the connector nut.

4. Repeat steps 1-3 above for each coaxial port used.

Step 3: Configure Hardware

Configuring the DSAN hardware involves four main activities:

- Performing a basic power check
- Checking and adjusting input signal levels
- Checking and adjusting output signal levels
- Checking and adjusting DSAN embedded cable modem (eCM) signal levels

Hardware configuration is performed with the DSAN housing open. Before you begin, refer to ***To Open the Housing*** (on page 36).

When configuring the DSAN hardware, refer to the following block diagram for help with component and port locations.

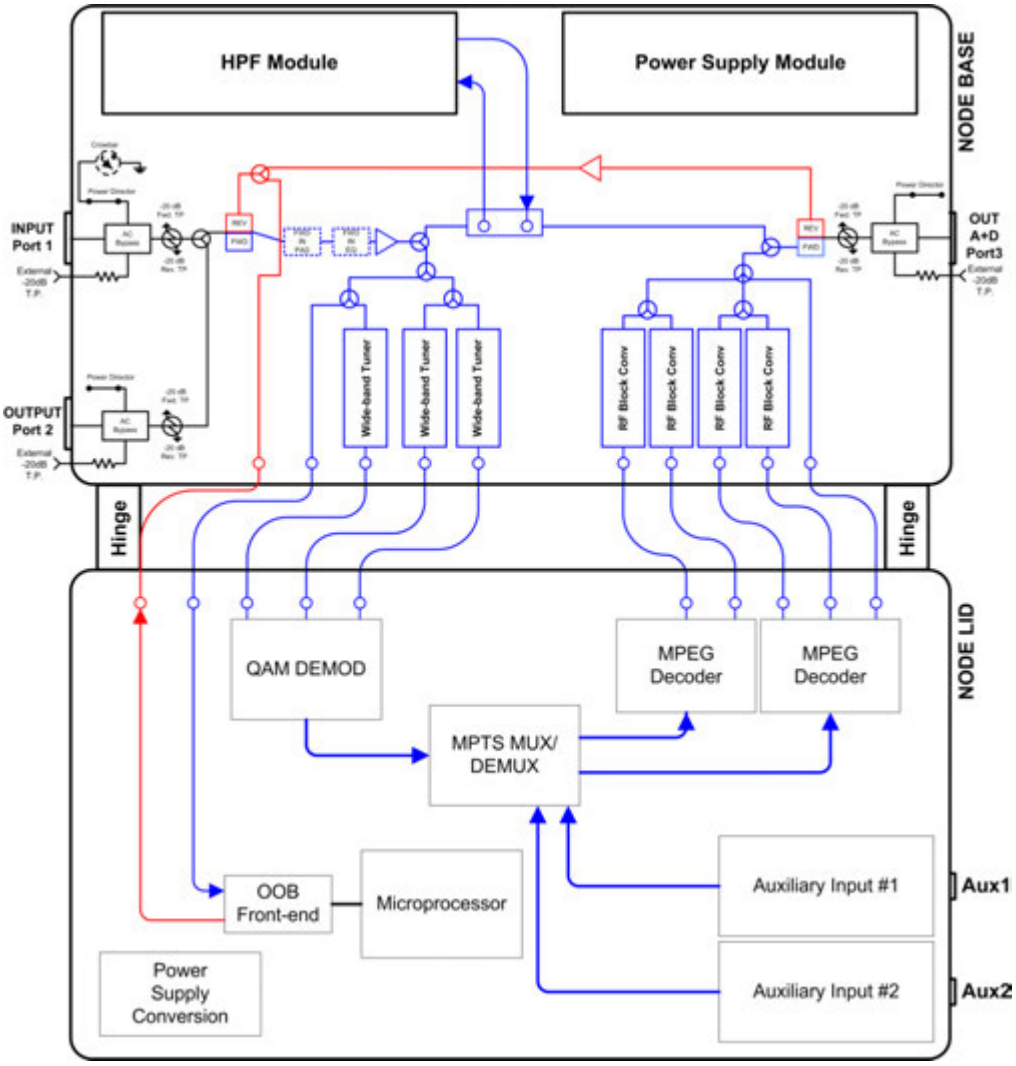

To Perform a Basic Power Check

After connecting the plant coax to the DSAN Input port, open the DSAN housing and use a digital multimeter (DMM) to check for the correct AC and DC voltages at the test lugs on the power supply module.

Important: Before testing, confirm that an AC shunt is installed at the port with AC power.

To Check and Adjust Input Signal Levels

The cable plant signals enters the DSAN unit at its Input port (Port 1). An input pad is used to set the downstream signal levels at the DSAN input, which in turn defines the signal levels at the DSAN input tuners. The nominal DSAN input signal level in the digital tier should be set to +4 dBmV. Analog carriers should be 6 dB higher in level. A plug-in input EQ is used to set the flatness of the input frequency spectrum. The input frequency spectrum should be flattened as much as possible.

Complete the following steps to set the input signal level and frequency spectrum flatness at the input to the DSAN unit.

1. Connect the cable plant to the Input port (Port 1) on the DSAN unit.
2. Connect the test equipment to the Input port test point (FWD IN -20 dB TP) on the DSAN unit.
3. Measure the signal levels at the lowest frequency and highest frequencies specified in the system design.
4. Adjust the FWD IN EQ to flatten the frequency spectrum. Adjust the FWD IN PAD to adjust the level of the input signals.

   Note: A FWD IN PAD value of 1 dB and a FWD IN EQ value of 0 dB give the proper setup for a flat input spectrum with digital signal levels at +4 dBmV (analog channels are +10 dBmV, or 6 dB higher than digital). Changes to the FWD IN PAD and FWD IN EQ values will not change the measured results at the FWD IN -20 dB test point because this test point is located ahead of the input accessories.

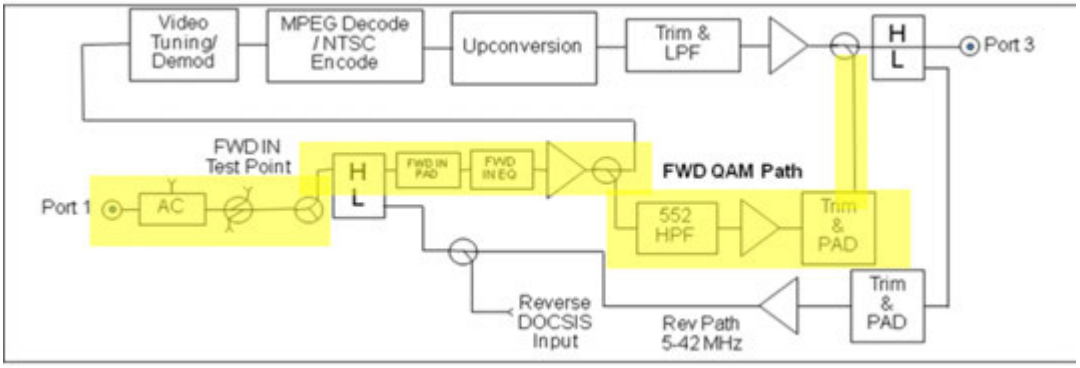

Reverse Path Signal Levels

The reverse path is unity gain (0 dB). The DSAN provides no internal adjustment for levels and tilt for the upstream signal. Although no reverse path setup is required, you should verify the proper level upstream of the DSAN.

To Check and Adjust Output Signal Levels

The signals generated by the DSAN exit the unit at the Mixed Services output port (Port 3). The nominal DSAN analog output level is + 20 dBmV. The digital portion of the DSAN output spectrum should be configured to be 6 dB down from the analog portion (nominally +14 dBmV).

The DSAN analog output signal levels are fixed and are not a function of the input power level to the DSAN. The operator can adjust the level of the digital tier signals (>564 MHz) at the Mixed Services output port (Port 3), if needed, by changing the FWD IN PAD value.

Note: Due to its RF output level, the next component in the network following the DSAN should be an amplifier, preferably a high gain dual with a low input signal requirement.

Complete the following steps to verify and set the signal levels for the output of the DSAN unit.

1. Connect the test probe to the Mixed Services output port (Port 3) test point (FWD OUT -20dB TP).
2. Monitor the output levels of all active channels between 585 MHz and the upper frequency limit of the plant.
   - **a** Note the highest and lowest signal levels over that frequency range.
   - **b** Add together the highest and lowest signal levels noted above, and then divide the result by 2.
   - **c** Use the resulting average value as the reference digital channel signal level for step 4 below.
3. Measure and note the output signal level of Channel 2 (55.25 MHz) at the Mixed Services output port (Port 3) test point (FWD OUT -20 dB TP). Use this value as the reference analog channel signal value for step 4 below.
4. Confirm that the reference analog channel signal level found above is 6 dB greater than the reference digital channel signal level found above. If necessary, adjust the FWD IN PAD value to achieve 6 dB difference between the reference analog and digital signal levels.
5. If any problems persist, see ***CLI Diagnostics*** (on page 73) for help with further investigation.

Bypass Output Port (Port 2)

For optional downstream use, this port replicates the input signal at Port 1. The signal level is -9 dB relative to the signal level at the Input port. This value is not internally adjustable.

To Check and Adjust eCM Signal Levels

The final step in DSAN RF setup is to adjust plant levels in the reverse signal path so that the upstream signal transmitted by the DSAN eCM is received at the correct level by the CMTS in the headend.

Notes:

- The downstream DOCSIS channel level is set up properly when the DSAN RF input levels are configured as described in the preceding sections.
- You can monitor upstream eCM power levels on CLI diag page 4.1 as described in ***CLI Diagnostics*** (on page 73). The power levels reported in CLI differ from those which you might otherwise try to measure at Port 1. The upstream power level reported in CLI is 13.7 dB higher than the level at Port 1 because it is measured internally before attenuation. For example, a CLI reported power level of 49 dBmV would imply a power level of (49 - 13.7 =) 35.3 dBmV measurable at Port 1.

The maximum upstream transmit level of the DSAN eCM is +54 dBmV. This level is attenuated by 13.7 dB internally, resulting in a maximum launch power of +40.3 dBmV as measured at Port 1. The actual eCM operating output power is set automatically by the DSAN eCM power ranging process in communication with the CMTS.

As with any eCM, the best signal-to-noise performance is achieved by having the DSAN eCM transmit upstream at the highest possible level while holding enough launch power in reserve to allow for worst-case plant fluctuations. To do this, you apply a *back-off* from the maximum launch power to find a target value for DSAN eCM transmit level under nominal plant conditions. You then adjust nominal reverse path plant levels between the DSAN and CMTS so that the eCM transmits at this target value.

The back-off that you apply to find the target eCM transmit level will vary with plant characteristics and with the location of the DSAN within the plant, making it difficult to provide a general figure. If your company has a back-off rule that eCM installers currently use on the plant, then apply the same rule when adjusting plant levels to achieve the desired DSAN upstream transmit level at Port 1.

For example, if your installers routinely back off the eCM upstream level 5 dB from maximum transmit level, DSAN upstream transmit power at Port 1 should measure (40.3 - 5) = +35.3 dBmV. When using the DSAN CLI diagnostic interface to monitor upstream power, the DSAN upstream transmit power should report (35.3 + 13.7 =) 49 dBmV due to the 13.7 dB measurement differential noted above.

Step 4: Confirm Proper Bootup Operation

Given proper headend support and DSAN hardware setup, the DSAN will be configured automatically during the bootup period that immediately follows power-up.

Important: The DSAN bootup process takes several minutes to complete. There is no video output from the unit until the bootup process is complete.

To confirm proper bootup operation, choose the appropriate set of steps below. The verification sequence varies depending on whether the DSAN already has a valid configuration file loaded.

Bootup Sequence (Valid Configuration Stored)

Complete the following steps to monitor the bootup sequence that occurs when a valid configuration is stored in the DSAN cache.

1. Before applying power to the DSAN, open the unit and connect a PC laptop to the diagnostic port as described in ***CLI Diagnostics*** (on page 73).
2. Apply power. After about one minute, the console prints **DSAN Initializing…** and displays a progress bar.
3. After about two more minutes (three minutes from power-up), a **dsan login:** prompt appears on the PC laptop screen.
4. Log in to the DSAN using the default user ID **dsan** and password **dsan1234**. Both user ID and password are case-sensitive. The DSAN> prompt appears.
5. At the DSAN> prompt, type **diag** and then press **Enter** to display page 1 of the DSAN diagnostic screens. Verify that the POST (Power On Self Test) passed.

   The DSAN now performs two operations simultaneously. The first is to output video using the cached configuration. The second is to begin the cable modem registration process. In the next two steps, you will first confirm the video output, and then observe the cable registration process.
6. Confirm video output using the cached configuration, as follows:
   - At the >>> prompt, type **1** and then press **Enter**. (You can also press **Enter** on any diag page to refresh the information.)
   - Confirm that the DSAN configures the QAM frontend to DSAN (Tuners and QAM Demod). This shows up as **Starting Channel Remap** and **BL12k Setup** under the Remap State: entry.
   - Confirm that the front end successfully completes its configuration. Remap State changes to **Remap Send** as it configures the video decoders, and at completion, changes again to **Channel Remapped**.

- Confirm that there is video output from the DSAN on all configured channels. This point is reached approximately 4 minutes from power-up. The Demods: line should display X in use QAM demods and X locked QAM demods. The Channels line should display X provisioned channels and 0 errored channels.

7 Confirm successful cable modem registration and connection to the CMTS, as follows:

- At the >>> prompt, type **4** and then press **Enter**. The cable modem (CM) information page appears.
- Verify that CM registration completed successfully (see CM registration status field).
- Verify two-way communication between DSAN and CMTS (see configuration filename and status of "retrieved successfully").

The DSAN now will verify that the configuration on the Headend matches the one currently configured on the unit.

- If successful, the Provisioning State on diag page 1 will normally go to **Idle**.
- If an error occurs, an alarm will be present on diag page 3 identifying the error.

If the expected results do not occur at any stage in the bootup process, consult ***Troubleshooting*** (on page 122) for help in diagnosing and correcting the problem.

Bootup Sequence (No Configuration Stored on DSAN)

Complete the following steps to monitor the bootup sequence that occurs when there is no valid configuration file stored in the DSAN cache.

1 Before applying power to the DSAN, open the unit and connect a PC laptop to the diagnostic port as described in ***CLI Diagnostics*** (on page 73).

2 Apply power. After about one minute, the console prints **DSAN Initializing…** and displays a progress bar.

3 After about two more minutes (three minutes from power-up), a **dsan login:** prompt appears on the PC laptop screen.

4 Log in to the DSAN using the default user ID **dsan** and password **dsan1234**. Both user ID and password are case-sensitive. The DSAN> prompt appears.

5 At the DSAN> prompt, type **diag** and then press **Enter** to display page 1 of the DSAN diagnostic screens. Verify that the POST (Power On Self Test) passed.

The DSAN now begins connecting to the CMTS. If the DSAN has not been used on this headend before, this process can take up to 5 minutes.

6 Confirm successful cable modem registration and connection to the CMTS, as follows:

- At the >>> prompt, type **4** and then press **Enter**. The cable modem (CM) information page appears.
- Verify that CM registration completed successfully (see CM registration status field).
- Verify two-way communication between DSAN and CMTS (see configuration filename and status of "retrieved successfully").

7 The DSAN now builds a channel lineup based on the configuration downloaded and the Headend SI data.

- If successful, the Provisioning State on diag page 1 will go to **Idle**.
- If an error occurs, an alarm is displayed on diag page 4 identifying the error.

8 Confirm video output using the new configuration, as follows:

- At the >>> prompt, type **1** and then press **Enter**. (You can also press **Enter** on any diag page to refresh the information.)
- At this point DSAN should be outputting video on all configured channels. The Demods: line should now display X in use QAM demods and X locked QAM demods. The Channels line should display X provisioned channels and 0 errored channels.
- Confirm that the DSAN configures the QAM frontend to DSAN (Tuners and QAM Demod). This shows up as **Starting Channel Remap** and **BL12k Setup** under the Remap State: entry.
- Confirm that the front end successfully completes its configuration. Remap State changes to **Remap Send** as it configures the video decoders, and at completion, changes again to **Channel Remapped**.
- Confirm that there is video output from the DSAN on all configured channels. The Demods: line should display X in use QAM demods and X locked QAM demods. The Channels line should display X provisioned channels and 0 errored channels.

If the expected results do not occur at any stage in the bootup process, consult ***Troubleshooting*** (on page 122) for help in diagnosing and correcting the problem.

2

Introduction

This chapter gives an overview of the purpose, features, and operation of the Cisco DSAN system.

In This Chapter

Product Overview

The Cisco DSAN solution provides a cost-effective, flexible, easy-to-deploy system for servicing the needs of MDU, hospitality, and other bulk analog accounts. The DSAN regenerates up to 82 analog channels of NTSC video at the customer premise through the use of bulk PowerKEY® decryption and bulk MPEG decoder technology. This environmentally hardened node product is designed to operate seamlessly within a CATV network for setup, provisioning, and billing, fitting easily into existing HFC installations.

Specifically designed for on-site deployment, the DSAN supports two auxiliary inputs, allowing customers to provide up to eight customized local channels (e.g., security cameras, DVD players, local bulletin boards, etc.) for their residents or guests. The channel lineups for each DSAN can also be configured independently to support specific customer needs, allowing service providers to offer a wider variety of content. Additionally, the DSAN supports digital pass-through, making it an extremely flexible platform that is ideal for customers wanting additional services such as HD, VOD, Data, and Voice.

DSAN Solution

The DSAN is a device that converts a pure digital plant spectrum to a combined spectrum containing both digital and analog output, as shown in the following illustration.

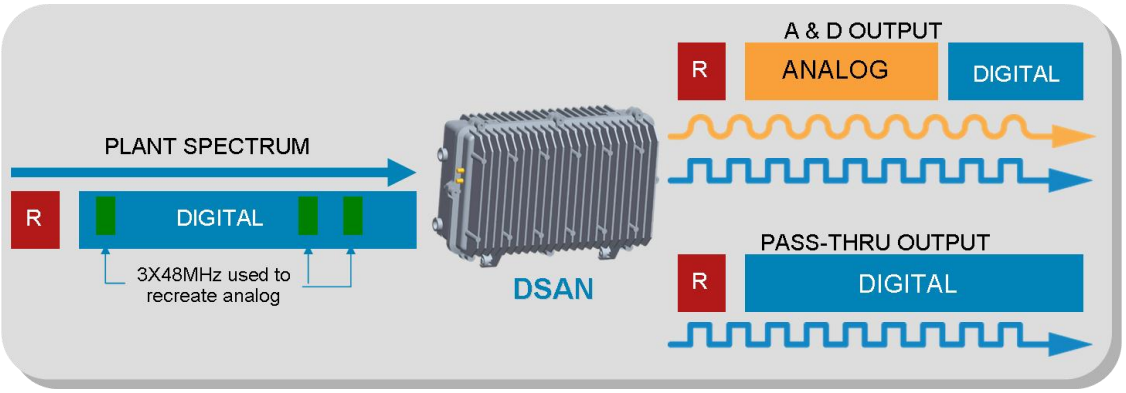

The analog output is recreated from portions of the digital plant spectrum, and occupies the 54 to 552 MHz frequency range designated for CATV analog channels. The combined digital output (564 MHz to 1 GHz) is available for use by compatible receiving equipment such as a set-top box, EMTA, or cable modem.

In addition to providing a combined analog plus digital output, the DSAN provides a pure digital pass-through output port that is identical to the input (minus attenuation) for servicing those customers who want the full service provider offerings.

Analog Regeneration

In order to recreate the 82 channels of analog content, the DSAN takes in three blocks of 48 MHz spectrum and enables the demodulation of 16 QAM carriers. These QAM signals can be located almost anywhere in the 1 GHz HFC spectrum, giving service providers unparalleled flexibility. For example, the DSAN can demodulate up to 16 QAM carriers and, at 10:1 compression, can select from up to 160 standard definition digital channels for conversion to the 82 analog channel outputs.

The following illustration shows an example of the regeneration process for an analog spectrum of 54 to 552 MHz that is reconstructed from a portion of the digital tier, which can span from 54 to 1002 MHz.

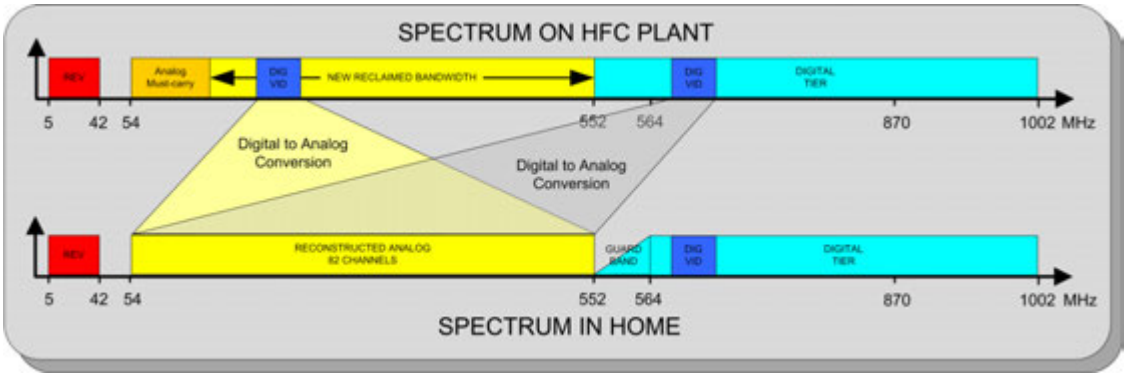

As shown above, a 12 MHz guard band is provided in the DSAN output spectrum between the reconstructed analog and the low end of the digital tier. A dedicated "brick wall" high-pass filter in the DSAN creates this guard band, which is needed to isolate the recreated analog channels from existing channels on the plant.

Note:

- The analog channel lineup is fully configurable: any regenerated analog channel can be positioned anywhere between 54 and 552 MHz in the EIA/NCTA channel allocation lineup.
- The DSAN does not pass existing analog channels. If there are analog channels on the HFC plant that must be delivered to the MDU, these channels can be digitally simulcast and regenerated by the DSAN product.

Product Features

- Recreates 82 channels of analog content
- Recreates analog spectrum from 54 to 562 MHz
- Dual output port flexibility with digital pass-through port
- Local Channel Insertion (LCI) capable
- Two ASI input ports for LCI - up to 8 input channels using the DAXI accessory
- Indoor/outdoor environmentally hardened, IP68 compliant node housing
- Coax input power with coax power passing on RF outputs
- Field-replaceable power supply
- Three independent tuners, each 48 MHz bandwidth, range 88 to 1002 MHz
- Simultaneous QAM demodulation of 16 channels from down-converted spectrum
- QAM 64 and QAM 256 digital tier demodulation support
- Audio processing decodes up to 2 audio streams per program
- BTSC stereo encoding of second audio program (SAP) for each channel
- Support for SCTE-20 and SCTE-21 closed captioning
- Emergency Alert System (EAS) support
- Uses standard GainMaker® accessories (shunts, crowbars, EQs, etc.)
- Mixed Services output can be remotely shut off by deprovisioning the device
- Out-of-band monitoring and management via CLI (local) or SNMP (remote)
- Support for bulk PowerKEY decryption of 82 channels

Physical Description

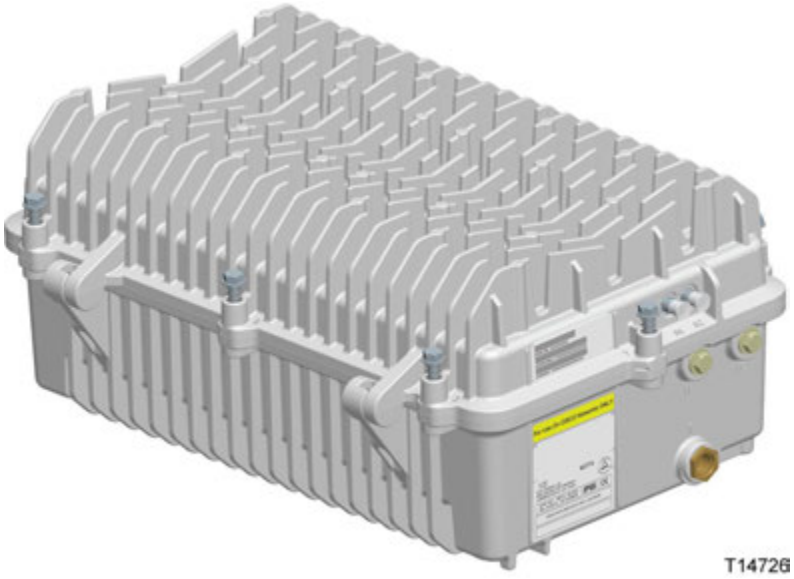

Main Components

The DSAN system unit includes the following main internal components.

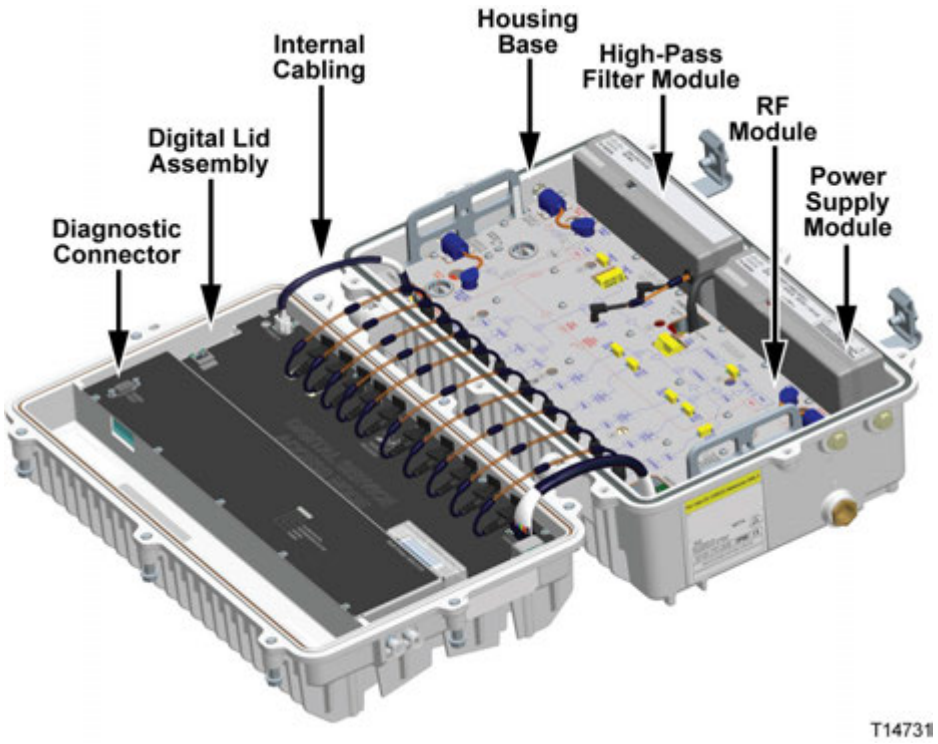

Component	Description
Housing base	Houses the high-pass filter, power supply, and RF module
RF module	Houses the RF tuners and upconverters and handles input and output signal routing
Power supply module	Converts coax line power to DC
Digital lid assembly	Houses the digital board
High pass filter module	Isolates regenerated analog from existing plant carriers
Internal cabling	1 power cable, 10 RF cables, 1 digital control cable
Diagnostic connector	Used for local management and troubleshooting

Input and Output Connections

The left side of the enclosure contains the following connectors:

- Input port (Port 1)
- Bypass Output port (Port 2)
- Input forward path test point TP1 (-20 dB)
- Bypass Output forward path test point TP2 (-20 dB)

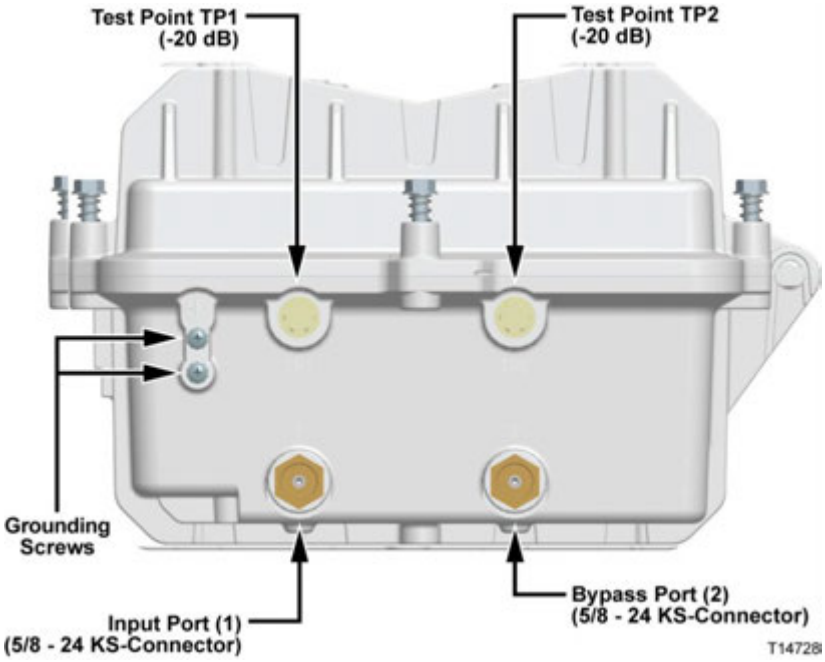

The right (product label) side of the DSAN enclosure contains the following connectors:

- Mixed Services output port (Port 3)
- Mixed Services output forward path test point TP3 (-20 dB)
- Aux 1 Input port
- Aux 2 Input port

An additional port next to the Mixed Services output port is reserved for possible future use.

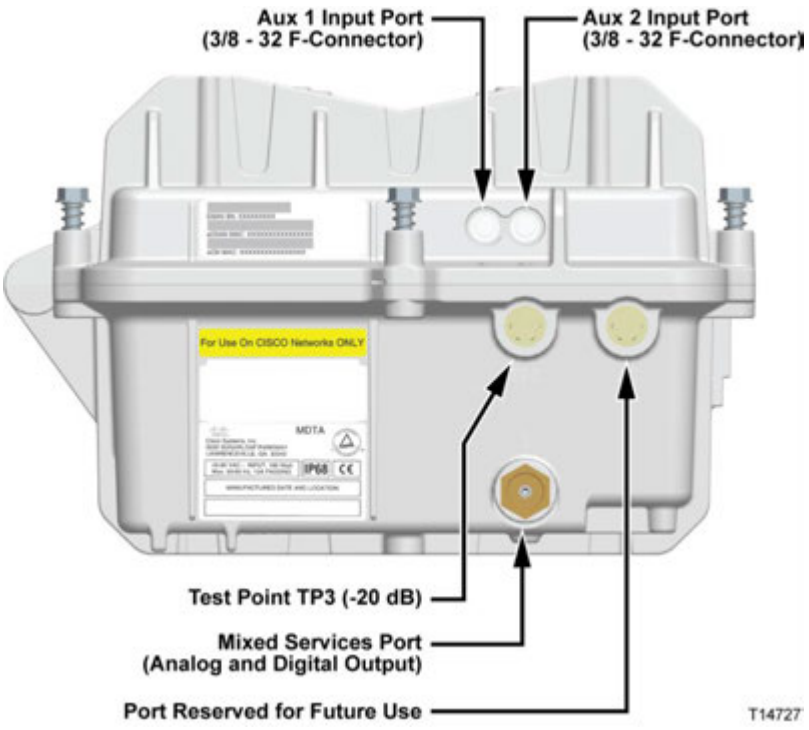

Product Labels

Product labels are attached to the right side of the DSAN lid and base, as shown in the preceding illustration. These labels provide the following information.

- Label on lid - DSAN serial number, EDSAN (aka eHost) MAC address, and eCM MAC address
- Label on base (top) - DSAN ordering part number and other manufacturing information
- Label on base (bottom) - DSAN model number and compliance information

Duplicate copies of the serial number and MAC address label are affixed to the outside of the DSAN shipping carton and inside the lid of the DSAN housing.

Accessories

The DSAN accepts standard GainMaker attenuator pads, plug-in equalizers, and fused shunts. A dedicated mounting bracket is available for installing the unit on a wall or in a 19-inch equipment rack.

Description	Part Number
DSAN Rack/Cabinet Mounting Bracket	4028925
GainMaker Attenuator Pads	589693 through 589734 0 dB through 20.5 dB in 0.5 dB increments
GainMaker 75 ohm Terminator	589735 In Attenuator Pad Package
GainMaker Forward Equalizer Jumper	4007228
GainMaker Forward Equalizer	4008778 through 4008787 4019258 through 4019261 1.5 dB through 21 dB in 1.5 dB increments
GainMaker System Trim Jumper	589285 (ships with each DSAN)
GainMaker Fused AC Shunts	712769
GainMaker Crowbar Surge Protector	4000839

Note: For installation instructions, see ***Hardware Installation*** (on page 31).

Functional Description

The DSAN is a single chassis that installs either indoors in an MDU equipment closet or basement, or outdoors on a strand or in an equipment cabinet or pedestal.

Forward Path Operation

The DSAN receives quadrature amplitude modulated (QAM) MPEG-2 encoded video and AC3 encoded audio, and generates up to 82 NTSC video with BTSC audio channels between 54 MHz and 552 MHz.

All DSAN configurations have one coaxial input sourced from the service provider headend. The DSAN can tune up to three 48 MHz bands residing in the 88 MHz to 1 GHz spectrum. Residing within this 48 MHz band are eight contiguous 6 MHz QAM channels. Each QAM channel may contain up to 15 MPEG-2 video channels.

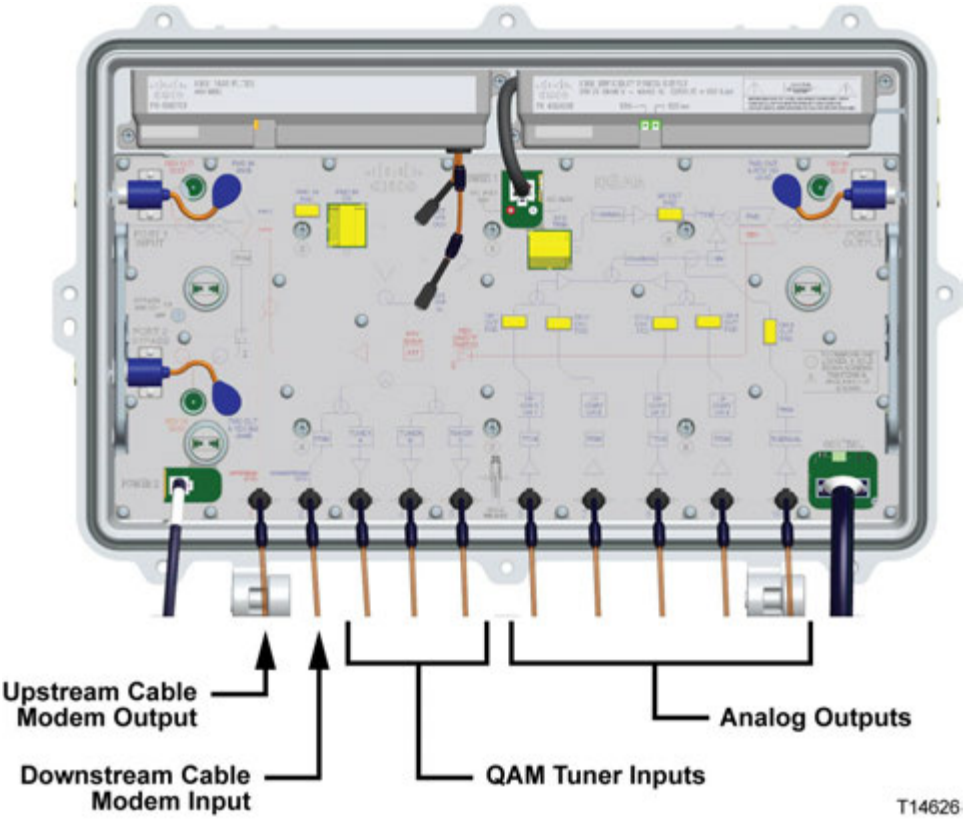

In addition to the HFC input, the DSAN has two ASI auxiliary port inputs. These auxiliary inputs can support four channels each when sourced using the external DAXI product accessory.

The DSAN has two output ports:

- The Mixed Services output contains the regenerated analog tier (54 to 552 MHz) combined with the portion of the input above 564 MHz. Due to filter limitations, there is a guard band of 12 MHz, from 552 to 564 MHz, where the digital signals are not attenuated sufficiently. As a result, no digital signals are supported in this band.
- The second output, referred to as the Bypass output, is simply an attenuated copy of the input.

Tuner Band Mapping

The DSAN is configured from the headend using custom software that applies the following algorithm to configure the wideband tuners and track QAM usage.

1. Map First Wideband Tuner
   - Map low end of first wideband frequency to lowest frequency of selected program input channel or QAM.
   - Limit tuner to 88 MHz to 1002 MHz frequency range (112 to 978 MHz center frequencies).
   - Keep count of the number of QAMs used (we can only use 16 of the 24 QAMs that the 3 wideband tuners support).
2. Map Second Wideband Tuner
   - Map low end of second wideband frequency to lowest frequency of selected program input channel after first wideband frequency range.
   - Limit tuner to 88 MHz to 1002 MHz frequency range (112 to 978 MHz center frequencies).
   - Update the QAM count.
3. Map Third Wideband Tuner
   - Map low end of third wideband frequency to lowest frequency of selected program after second wideband frequency range.
   - Limit tuner to 88 MHz to 1002 MHz frequency range (112 to 978 MHz center frequencies).
   - If the remaining selected QAMs are not within a 48 MHz band, the channel map is not valid.

Rules for Channel Mapping

A channel map is validated based on the following rules:

- Output channel numbers are unique.
- Valid EIA output channels are 2 through 78 and 95 through 99 (for channel plan and cutoff frequency).

- All services must have unique source identifiers.
- The input carrier should be between 88 MHz and 1002 MHz (91 to 999 MHz channel center frequencies).
- The wideband tuners should cover the input carrier channel frequencies.
- The input carrier modulation mode should be QAM 64 or QAM 256.

RF Channel Plan

RF cables 6 through 10 (counting left to right) transfer channels from the digital lid assembly to the RF module in predefined frequency bands, as follows.

- RF cable 6 carries EIA channels 63-78 on 456 to 552 MHz.
- RF cable 7 carries EIA channels 31-46 on 264 to 360 MHz.
- RF cable 8 carries EIA channels 47-62 on 360 to 456 MHz.
- RF cable 9 carries EIA channels 22, 7-13, and 23-30 on 168 to 264 MHz.
- RF cable 10 carries EIA channels 2-6, 95-99, and 14-21 on 52 to 168 MHz.

This staggered allocation is designed to increase the physical distance between cables carrying adjacent frequencies, thereby reducing mutual interference.

Note: EIA channels are not contiguous. See ***Technical Information*** (on page 219) for a complete list of the output channel video carrier frequencies. It is important to note this information before making any channel measurements.

Reverse Path Operation

The DSAN provides a buffered signal path from the Mixed Services output port to the Input port to support reverse communication. A small amount of gain and response tailoring is applied to make up for passive losses through the DSAN so that its insertion into the reverse path is transparent. No additional balancing of the reverse path is needed or provided.

Diplex filters at the Input and Mixed Services output ports allow signals above 54 MHz to pass in the forward or downstream direction, while allowing signals in the range of 5 to 42 MHz to pass in the reverse or upstream direction.

Additionally, a splitter in the reverse signal path provides an input port for reverse DOCSIS data.

Emergency Alert System Support

This section describes the Emergency Alert System (EAS) support and operation for the DSAN device.

Distribution and Triggering

The DSAN unit supports EAS signaling via the SCTE-18 standard. The signaling is distributed to the DSAN device via a broadcast DOCSIS® DSG Tunnel that is configured on the CMTS. The DSAN unit continuously monitors this tunnel for SCTE-18 data to trigger an emergency event. The unit determines the appropriate tunnel for the events through the processing of the DOCSIS Downstream Channel Descriptor (DCD).

Notification Method

The DSAN unit supports EAS notification via force tuning of specified output channels to a particular details channel. The details channel is specified in the SCTE-18 data in the *details_OOB_Source_ID* parameter. Scrolling text and audio overlay are not supported due to the complexities of insertion to a high number of analog output channels by the device.

Provisioning of the DSAN device should include the details channel as one of the 82 existing provisioned services on the output. In the event that the details channel specified in an EAS event is not a provisioned service, an alarm condition is entered indicating that the EAS details channel is not one of the provisioned channels, and the force tune will not occur.

Exception Channel Handling

To support exception channels, the details channel has to be one of the 82 existing provisioned services on the output. Exemptions to force tuning may be specified by including *exception_OOB_Source_ID* parameters for the sources that wish to be excluded. As the System Information (SI) data is carried out-of-band (OOB) for the DSAN device, the *exception_major_channel_number* and *exception_minor_channel_number* parameters are not used to determine exception channels per SCTE-18 specification.

EAS Message Priority

All messages with a priority level of 1 through 15 will be processed and output services will be force-tuned as specified in the EAS message. All messages with a priority of 0 will be disregarded.

DAXI Description

The DSAN Auxiliary Input Box (DAXI) is a compatible external product that converts up to four analog video channels to digital format for distribution via the DSAN.

The DAXI provides baseband video and audio conversion to MPEG-2 Transport Stream. The output is carried over one ASI channel to the DSAN ASI input. The content that the DAXI converts can come from up to four external sources such as a set-top box, DVD player, analog security camera, or character generator.

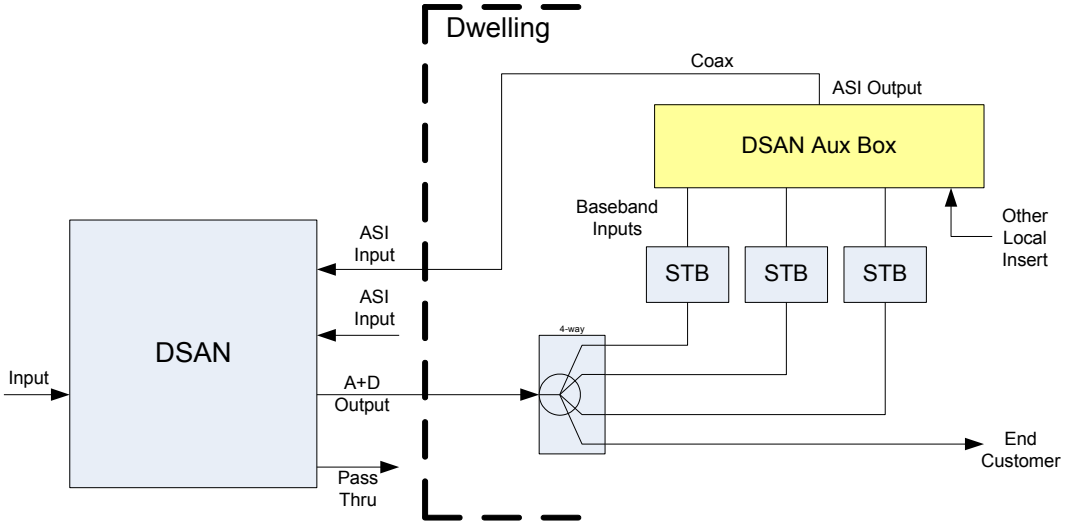

The DAXI is a stand-alone product targeted for indoor applications. It is simple to install and requires no maintenance or remote management. It can be mounted on a rack, a wall, or a shelf.

DAXI Front Panel

The following illustration shows the DAXI back panel.

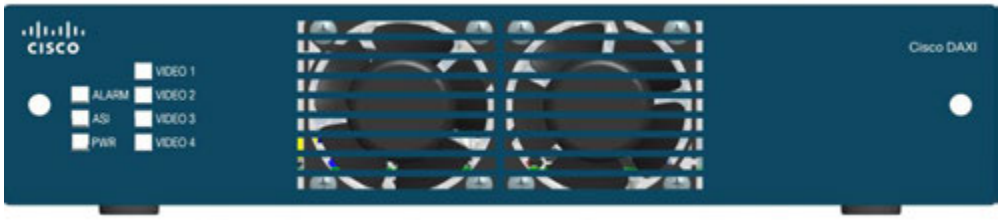

The DAXI accepts four analog baseband audio and video composite signal inputs, and provides one ASI output. The DAXI front panel has LEDs to show status on the four video inputs, the ASI output, the input power, and general Alarm status.

DAXI Back Panel

The DAXI accepts four analog baseband video composite signals over female RCA connectors, and their corresponding analog stereo baseband audio signals over female RCA connectors. On the data path side, it provides one standard ASI output on a female F connector. The DAXI is powered by +12 VDC via an external power supply converter.

Additional Information

For more information on the DAXI, refer to DAXI documentation or contact the customer service representative for your area.

3

Hardware Installation

This chapter provides instructions for installing the DSAN hardware in your cable system.

In This Chapter

Before You Begin

Before you start the installation procedure, make sure you have all the tools and accessories ready. You also need to know the torque specifications for the DSAN housing.

ESD Handling Precautions

Electrostatic discharge (ESD) results from the static electricity buildup on the human body and other objects. This static discharge can degrade components and cause failures.

CAUTION:

Prevent electrostatic damage to electronic equipment. Take ESD precautions, including the use of an ESD wrist strap.

Take the following precautions against electrostatic discharge when working on this equipment with the housing open:

- Use an anti-static bench mat and a wrist strap or ankle strap designed to safely ground ESD potentials through a resistive element. If you do not have a wrist strap, maintain grounded contact with the equipment throughout any procedure requiring ESD protection.
- Do not let clothing come into contact with the equipment. The ESD strap protects against ESD voltages that occur from the body, but not from the clothing.
- Do not slide the equipment over any surface.
- Keep new components in their anti-static packaging until ready for installation.
- Hold component boards by the edges only. Do not touch board-mounted components or gold connector pins.
- After removing components, place them on a grounded, static-free surface, ESD pad, or in a proper ESD bag.

Tools and Accessories

The following tools are needed to configure and install the DSAN:

- Torque wrench with a half-inch socket
- Hex driver or ratchet
- Flat-blade or Phillips screwdriver

The following accessories may be necessary to install the DSAN:

- Heat shrink tubing (optional)
- Heavy-duty wire cutters or snips for cutting the cable
- A propane torch or electric heat gun applicator for heat shrink (if shrink tubing is used)
- A selection of attenuators (pads) with values ranging from 0 dBm to 20.5 dBm
- A selection of forward equalizers

Torque Specifications

Fastener	Torque Specification	Illustration
Seizure nut	2 to 5 ft-lb (2.7 to 6.8 Nm)	
Strand clamp mounting bracket bolts	5 to 8 ft-lb (6.8 to 10.8 Nm)	
Pedestal mounting bolts	8 to 10 ft-lb (10.8 to 13.6 Nm)	
75 Ω terminator	Per manufacturer instructions	(Appearance varies by manufacturer)
RF amplifier cover screws	10 to 13 in-lb (1.1 to 1.5 Nm)	
Power supply, and high-pass filter module shoulder screws	18 to 20 in-lb (2.0 to 2.3 Nm)	
Housing closure bolts	5 to 12 ft-lb (6.8 to 16.3 Nm)	
Housing plugs Test point port plugs	5 to 8 ft-lb (6.8 to 10.8 Nm)	
RF cable connector	Per manufacturer instructions	

Weight Specifications

Before mounting the DSAN on a strand or pedestal, follow the precautions below.

WARNING:

The DSAN weighs approximately 50 lbs (22.7 kg). To avoid personal injury and damage to the equipment, perform the following:

- **Ensure that the strand or pedestal can support the weight of the DSAN.**
- **Use safe handling and lifting practices in accordance with your organization's procedures.**

Housing Dimensions

This illustration shows the dimensions of the DSAN housing. Use these measurements to calculate clearance requirements for your installation.

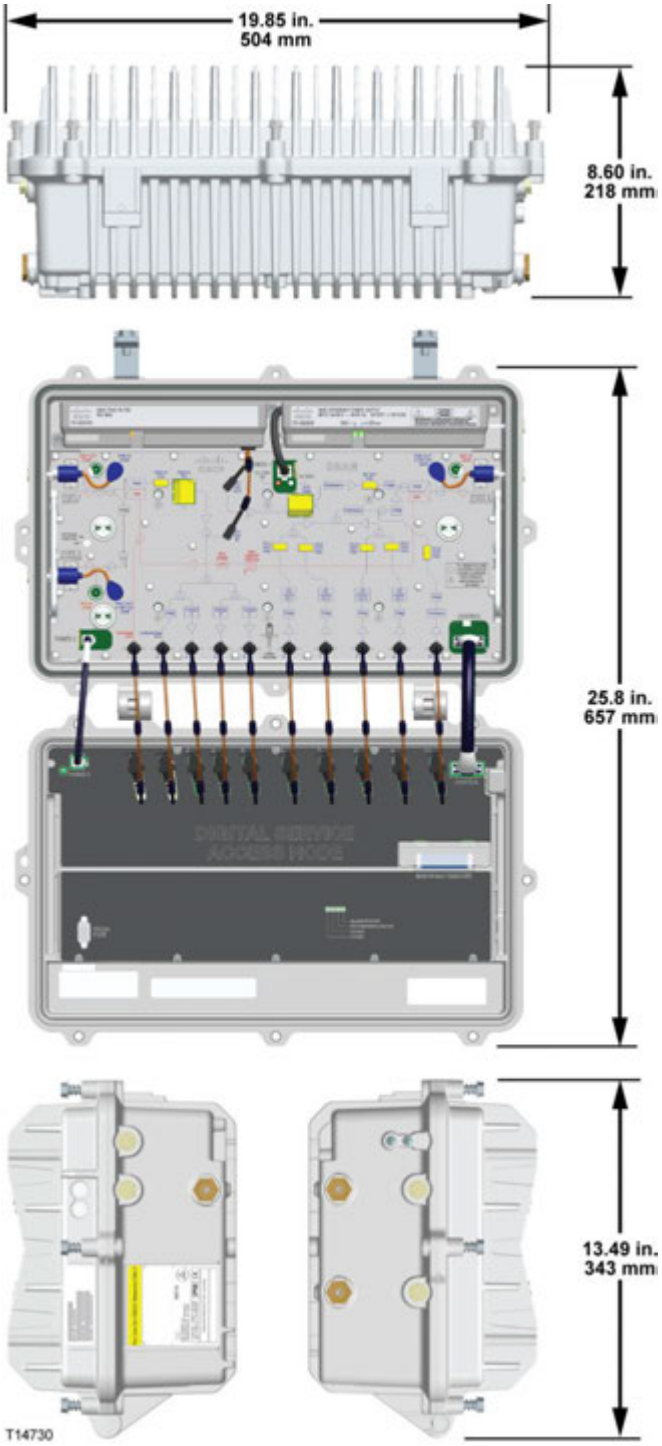

Opening and Closing the Housing

To Open the Housing

Complete the following steps to open the node housing.

Important: Before unscrewing the housing bolts, make sure the removable locking screw in the hinge is in place and secure. The locking screw prevents separation of the lid from the base.

1 Unscrew the 8 half-inch housing closure bolts on the housing lid until they are loose.

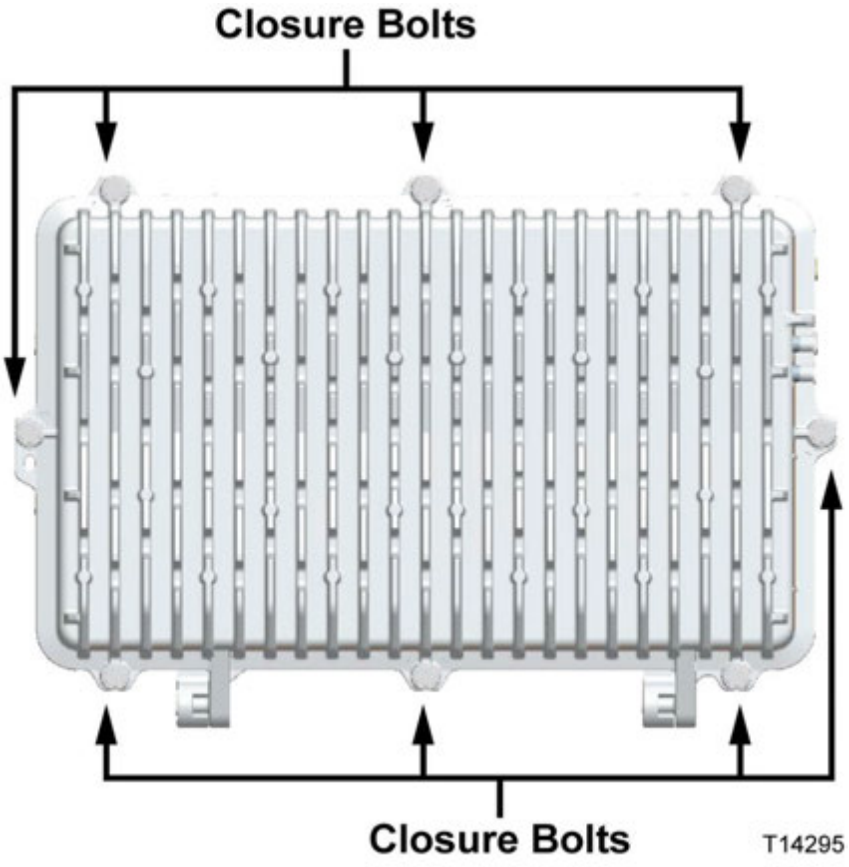

2 Open the housing.

Note: The closure bolts will remain attached to the housing.

To Close the Housing

Complete the following steps to close the node housing.

> ⚠ **CAUTION:**
>
> **Avoid moisture damage and RF leakage! Follow the procedure exactly as shown below to ensure a proper seal.**

1. Make sure that the housing gaskets are clean and in the correct position. Wipe off any excess dirt and debris.
2. Close the housing.

   > ⚠ **CAUTION:**
   >
   > **Ensure that all the cables are out of the way when closing the housing.**

3. Lightly secure the 8 half-inch closure bolts with a hex driver or ratchet.
4. Using a torque wrench, tighten the closure bolts to 25 in-lb (2.8 Nm).

   Important: Tighten the closure bolts in the correct sequence as specified in ***Torque Sequence*** (on page 37).
5. Using the same pattern, tighten the housing closure bolts from 5 to 12 ft-lb (6.8 to 16.3 Nm).

Torque Sequence

The following diagram shows the proper sequence for tightening the housing bolts. Use the torque settings provided in ***Torque Specifications*** (on page 33).

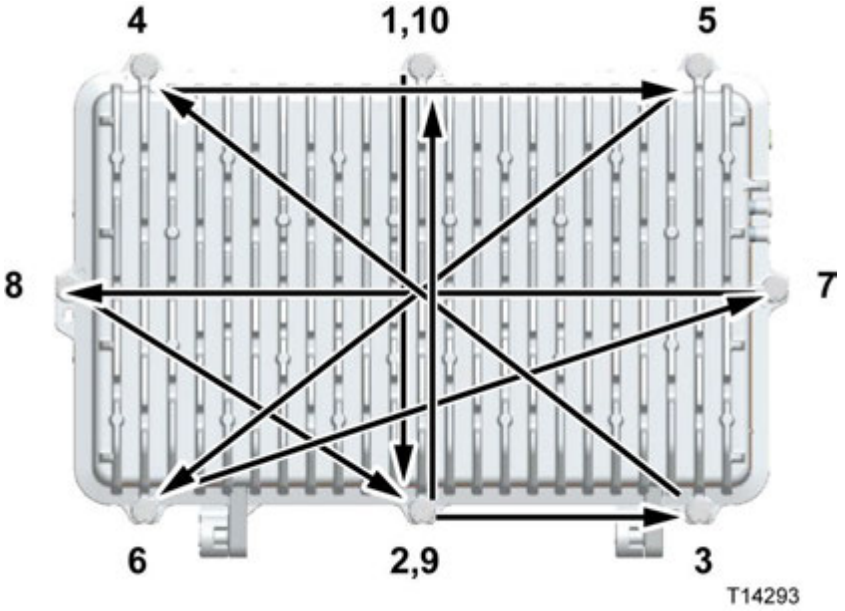

Attaching Ground

The DSAN housing includes a pair of screws that can be used to capture a grounding wire directly. These screws also have the correct size and spacing to allow for the use of a standard ground strap, if desired.

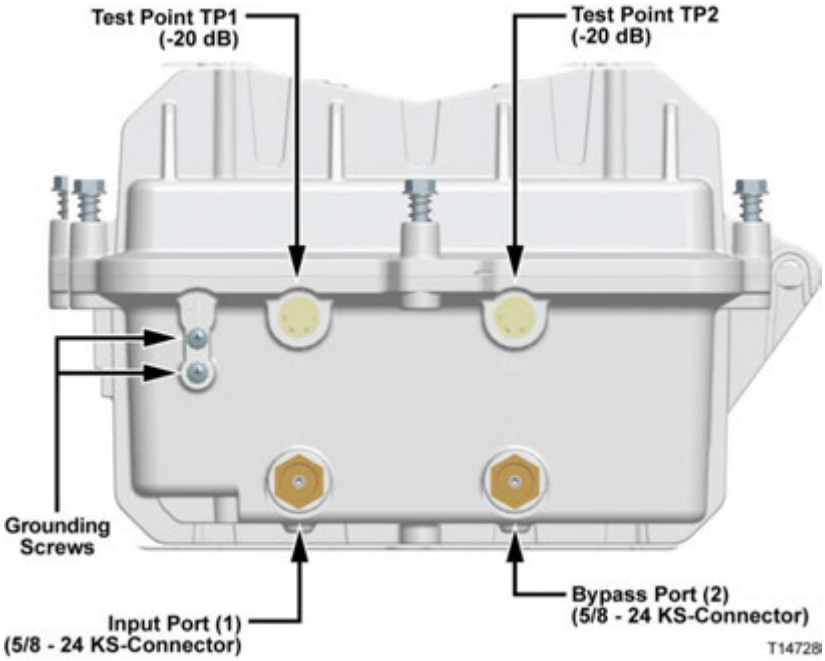

To Ground the DSAN Housing

Complete the following steps to attach a grounding wire to the DSAN housing.

1. Obtain a suitable length of grounding wire with the ends bared or cleaned as needed to ensure good electrical contact.
2. Loosen both grounding screws on the DSAN housing.

   Note: When using a grounding strap, first remove both the screws and their star washers, install the strap, and then replace the screws and star washers loosely.

   Insert one end of the grounding wire under the heads of both grounding screws, or if using a grounding strap, under the center portion of the strap. Tighten both grounding screws.
3. Attach the remaining end of the grounding wire to a suitable ground at the installation site.

Attaching the Coaxial Connectors

The DSAN requires pin-type connectors for all RF connections.

Important: Standard pin connectors, with pins extending 1.5 to 1.6 in. (3.8 to 4.1 cm) from the shoulder, require no trimming. You must trim longer pins before inserting them into the housing.

To Connect the Coaxial Cable Pin Connector

Complete the following steps for each coaxial pin connector to be attached to the node housing.

1 Check the length and condition of the coaxial cable pin. The pin must be straight, and the tip must be smooth with no burrs. The pin must measure 1.5 to 1.6 inches long (3.8 to 4.1 cm) from the tip to the base of the connector threads at the o-ring location. Use the cutting length guide on the housing base for reference, as shown below.

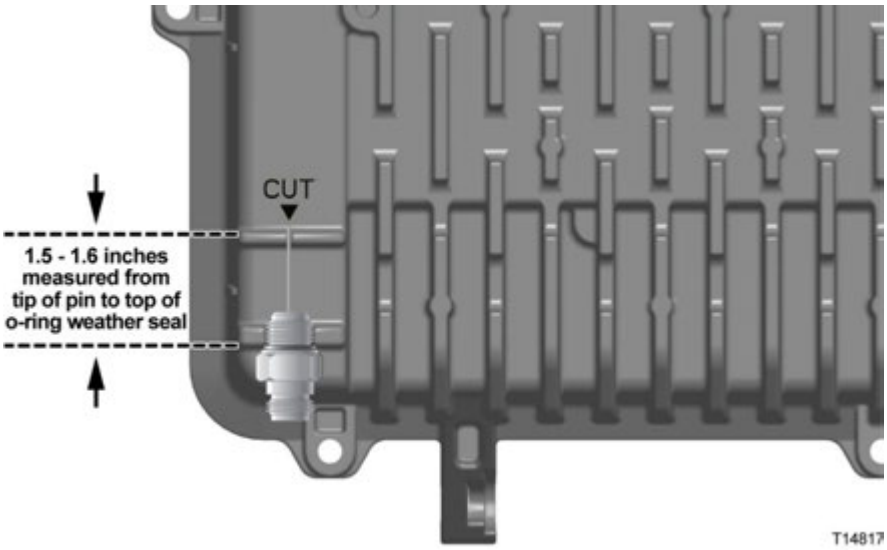

Important: The pin must meet the minimum length specified so the tip will engage the seizure inside the housing before the connector threads engage the housing. The pin must not exceed the maximum length in order to maintain proper product performance.

If necessary, trim the pin using heavy-duty wire cutters, and then file the tip smooth.

Note: Centering the pin length at 1.55 inches (3.95 cm) may make connector installation easier. A common approach is to cut the pin 1/16 inch (1.6 mm) longer than the cut guide on the housing.

2. Insert the coaxial connector into the housing at the desired housing port. The tip of the pin should engage the spring-loaded seizure.

   Note: It may help to twist the connector back and forth slightly while pressing in against the seizure to get the tip of the pin to engage.

3. Tighten the connector nut according to manufacturer specifications.

   Note: When using a small connector, use a 3/4-inch socket for increased leverage when tightening the connector nut.

4. Repeat steps 1-3 above for each coaxial port used.

Mounting the DSAN Housing

The following procedures detail how to install the DSAN housing:

- On a wall
- In a 19-inch equipment rack
- On a strand
- In a pedestal or cabinet

To Install the Housing on a Wall or in a Rack

Complete the following steps to install the DSAN housing on a wall or in a 19-inch equipment rack.

1. Carefully select and prepare the area to receive the DSAN unit.
   - Consider the weight of the DSAN unit itself, the mounting bracket, and all attached cabling and accessories.
   - Consider any possible accidental impact from passing foot traffic or moving objects. Avoid mounting the unit in high traffic areas.
   - Consider any additional stress that may be placed on the mounting surface and hardware by accidental snagging of attached cabling.
   - When mounting the unit on a wall, choose a location that allows for mounting into studs. Pre-drill pilot holes into the studs for four 5/16 x 2-inch (minimum length) lag bolts. Use the mounting bracket, part number 4028925, as a guide.
   - When mounting the unit in a rack, note that the height of the mounting bracket occupies 14 in. (35.6 cm) or 8 rack units.
2. Remove the two self-tapping bolts from the strand clamps. Set the bolts and strand clamps aside.
3. Place a lock washer and a flat washer on each self-tapping strand clamp bolt, arranged so that the lock washer is directly under the head of each bolt.
4. Pass the self-tapping bolts with washers through the mounting bracket, part number 4028925, and into the back of the housing as shown in the following illustration. Torque the self-tapping bolts from 8 to 10 ft-lb (10.8 to 13.6 Nm).

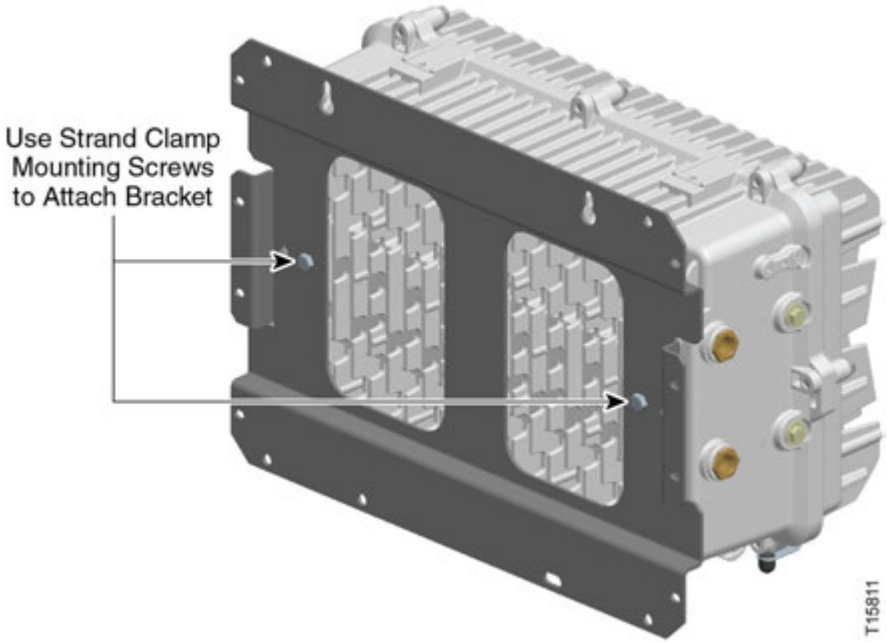

5 Position the housing on the wall or in the rack.

6 Secure the mounting bracket to the wall or rack as follows:

- For wall mounting, use four 5/16-inch lag bolts of sufficient length to allow a minimum 2-inch thread engagement with the studs. Torque the mounting bolts from 8 to 10 ft-lb (10.8 to 13.6 Nm).
- For rack mounting, use eight #10 x 32 machine screws and compatible nuts. The screws should be long enough to extend at least two threads beyond the outer face of the nut. Torque the screws from 25 to 30 in-lb (2.8 to 3.4 Nm).

7 Connect the coaxial cable to the pin connector according to connector manufacturer specifications.

8 Proceed to ***Installing Accessories*** (on page 44).

To Install the Housing on a Strand or in a Cabinet

Complete the following steps to install the DSAN unit on a strand or in a cabinet or pedestal enclosure.

Note: The housing does not need to be opened for strand, cabinet, or pedestal installation.

Important: The minimum strand diameter should be 5/16 inch.

CAUTION:

Be aware of the size and weight of the node while strand mounting. Ensure that the strand can safely support the weight of the node (approximately 50 lbs or 22.7 kg).

1. When mounting in a cabinet or pedestal, install a horizontal rod of at least 5/16-inch diameter to serve as a strand to mount the housing.
2. Loosen the strand clamp bolts on the DSAN unit.
3. Lift the housing into proper position on the strand.
4. Slip the strand clamps over the strand and finger-tighten the clamp bolts. This allows additional movement of the housing as needed.
5. Move the housing along the strand as needed to install the coaxial cable and connectors.

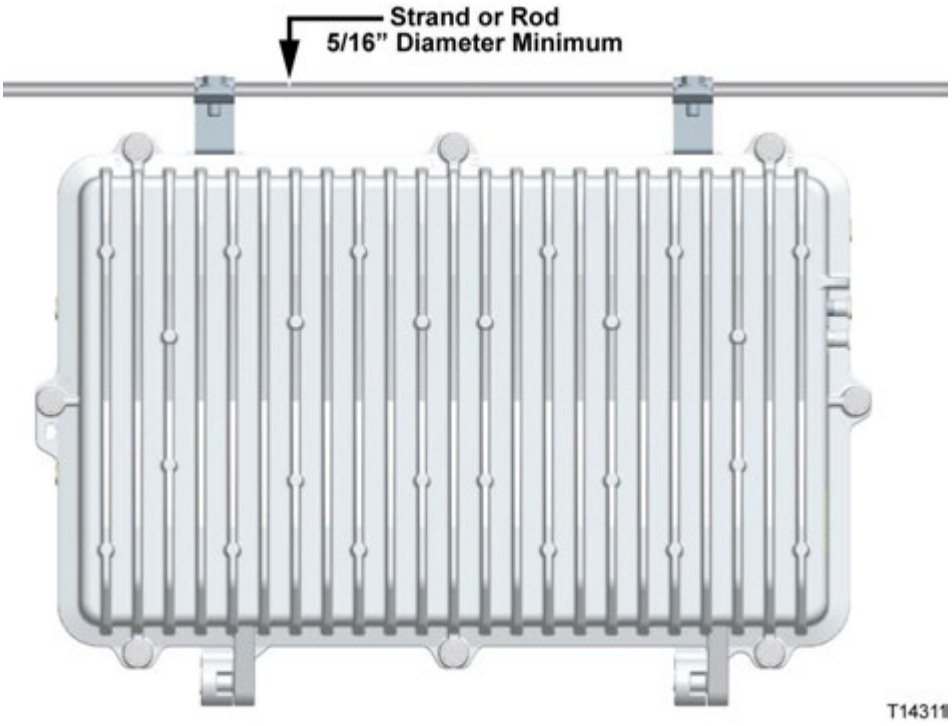

Note: If supplying power to the node through the AC power input port, a power inserter must be installed to terminate the RF signal.

6. Tighten the strand clamp bolts (using a half-inch torque wrench) from 5 to 8 ft-lb (6.8 to 10.8 Nm). Make sure there is good mechanical contact between the strand and the housing.

   Note: A slight tilt of the face of the housing is normal. Cable tension will cause the housing to hang more closely to vertical.
7. Connect the coaxial cable to the pin connector according to connector manufacturer specifications.
8. Proceed to ***Installing Accessories*** (on page 44).

Installing Accessories

The following section provides instructions for installing accessories into the DSAN housing.

To Install Attenuator Pads

Note: For best results, follow this installation procedure exactly.

Complete the following steps to install the attenuator pads.

1. Begin this procedure with the housing open. Refer to ***To Open the Housing*** (on page 36).
2. Install the pad(s) specified by the design print in the appropriate pad slot(s). For a list of available Node accessory pad values and part numbers, see ***Technical Information*** (on page 219).

   Important: These pads should not be changed in the field unless specified by system design.

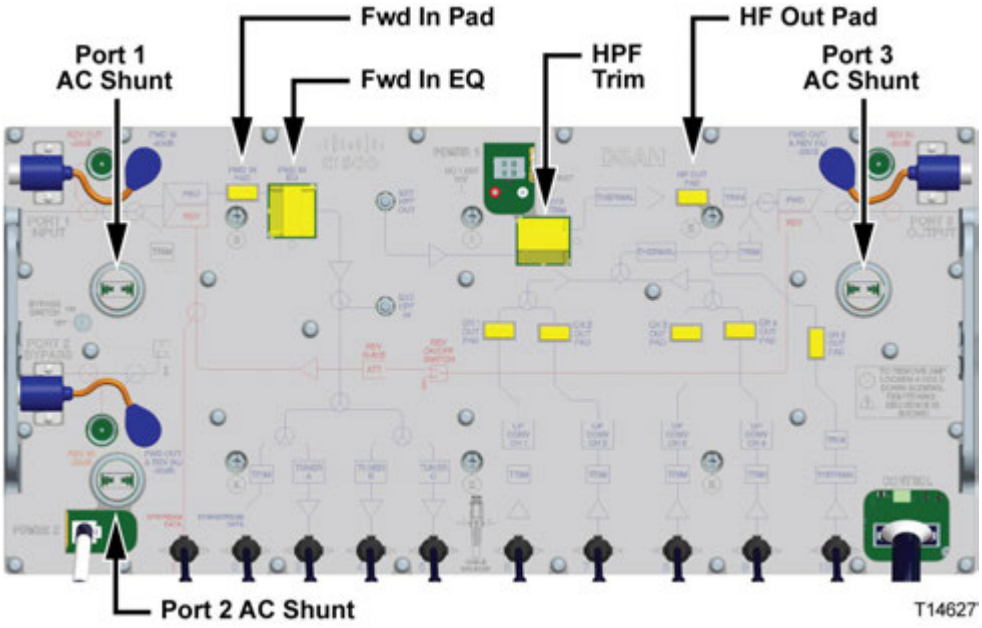

Note:

- Be sure all the pins on the attenuator pad bottom align with the pinholes in the attenuator pad slot, allowing the attenuator pad to install flat against the amplifier module.
- The forward input (FWD IN) and high frequency output (HF OUT) pads are installed at the factory to set the operational gain of the device. Do not change these pads unless required by system design.

- The pads on the outputs of the five analog block converters (CH1-CH5 OUT) are installed at the factory to equalize the converter output levels. Do not change these pads under any circumstances.

3 Install other options or accessories as desired, or proceed to ***Removing and Installing AC Shunts*** (on page 48).

To Install Equalizers

Note: For best results, follow this installation procedure exactly.

Complete the following steps to install the equalizers in the RF module.

1 Begin this procedure with the housing open. Refer to ***To Open the Housing*** (on page 36).

2 Install the forward input equalizer specified by the design print in the forward input equalizer slot. Or, install the correct inverse equalizer specified by the design print for your system in the forward input equalizer slot.

For a list of available GainMaker accessory pad values and part numbers, refer to ***Technical Information*** (on page 219).

Note: Be sure that all the pins on the forward input equalizer or inverse equalizer bottom align with the pin holes in the equalizer slot, allowing the equalizer to install flat against the amplifier module.

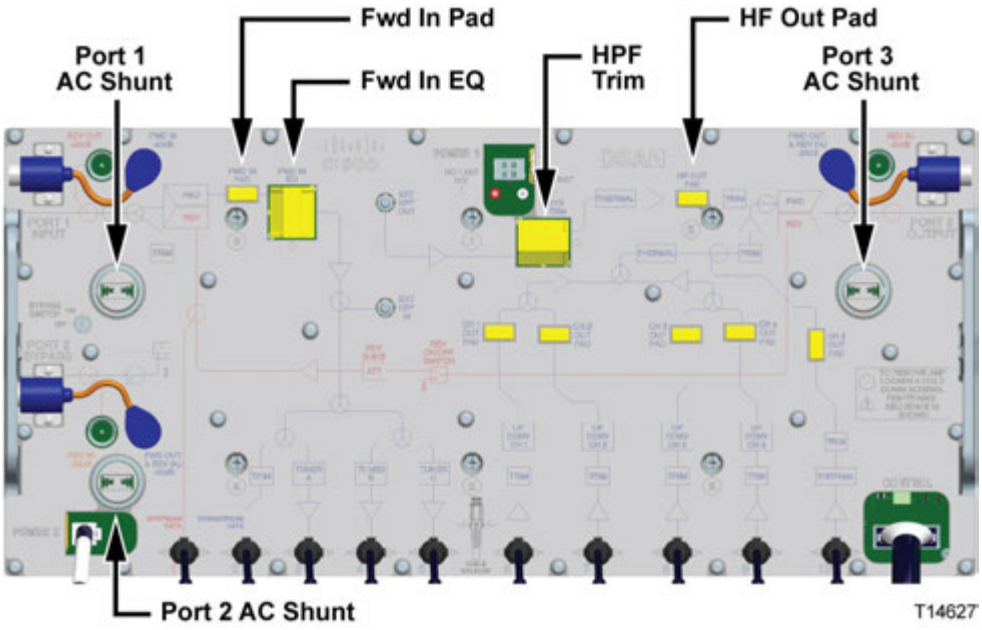

3 Install other options or accessories as desired, or continue with ***To Install the RF Module*** (on page 50).

To Install the Crowbar Surge Protector

Complete the following steps to install the crowbar surge protector in the RF module.

1. Begin this procedure with the housing open. Refer to ***To Open the Housing*** (on page 36).
2. Remove the RF module cover by loosening the 30 cover screws. Refer to the following illustration.

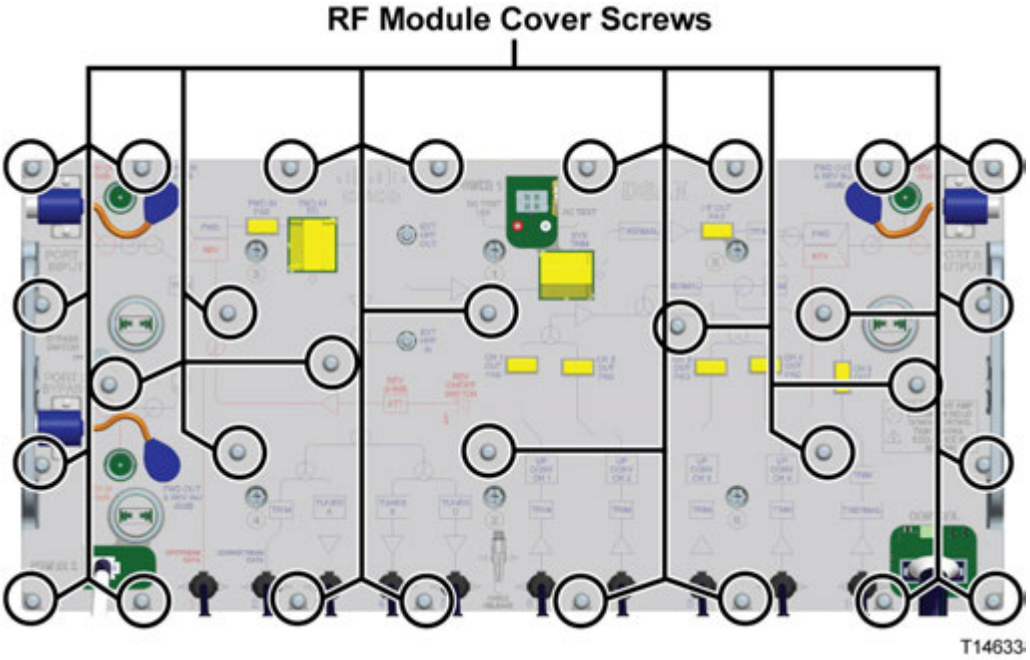

Note: The RF module retaining screws, numbered 1 through 6, should remain attached to the housing.

3 Install the crowbar surge protector in the surge protector slot. Refer to the following illustration.

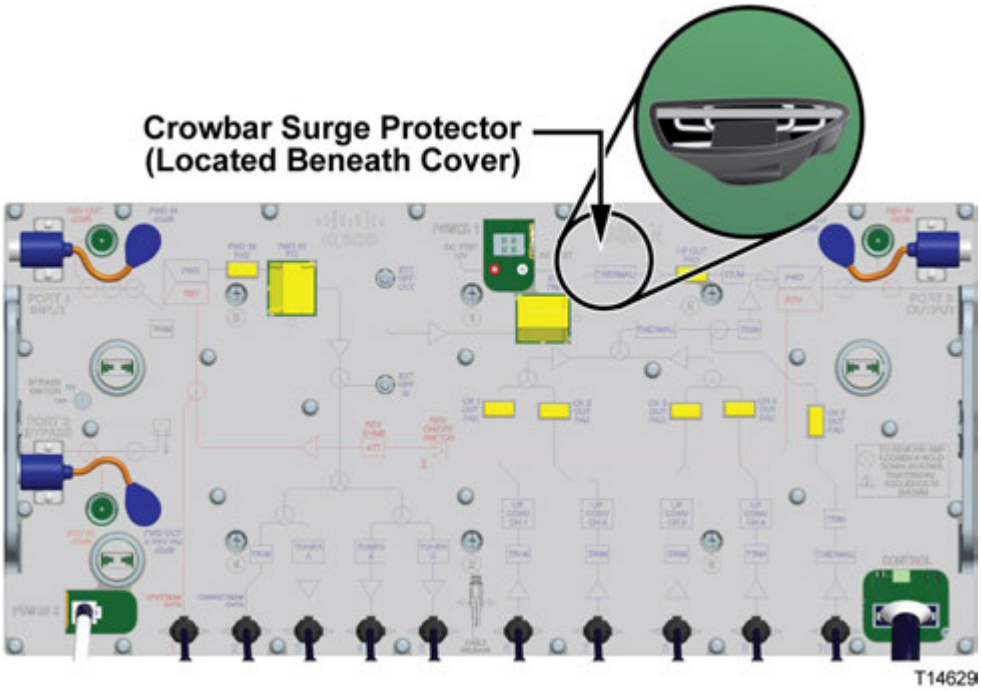

Note:

- Make sure that all the pins on the crowbar surge protector bottom align with the pin holes in the surge protector slot, allowing the surge protector to install flat against the RF module.
- Make sure that the components face the outside of the station (see the preceding diagram for proper positioning). Heat shrink tubing has been added to prevent shorting.

4 Secure the cover to the RF module and tighten the cover screws. Tighten slotted head screws to 6 to 9 in-lb (0.7 to 1.0 Nm), or cross head screws from 18 to 20 in-lb (2.0 to 2.25 Nm).

Important: The cover should lie completely flat on the RF module chassis. Make sure none of the RF module accessories prevent the cover from lying flat.

5 Install other options or accessories as desired, or proceed to ***Removing and Installing AC Shunts*** (on page 48).

Removing and Installing AC Shunts

The DSAN draws AC power from the coaxial cable. This AC power comes from an external AC power supply.

WARNING:

When AC is applied from RF ports to units downstream, the downstream equipment shall also be located in a restricted access location (access restricted to service personnel).

Power can come from the input or output ports, and each AC shunt can pass or block AC power flow on any port without affecting RF continuity. However, at least one port must pass AC power to bring power into the DSAN.

To set the power direction, install AC shunt power directors for the ports through which you wish to pass AC.

Note: A red AC shunt power director is included with the unit. The red shunt is used to activate the port that supplies power. The red shunt should be removed before installing or removing the RF module from the housing.

CAUTION:

RF connectors and housing seizure assemblies can be damaged if AC shunt power directors are not removed from the RF module before installing or removing the RF module from the housing.

To Remove and Insert AC Shunts

Complete the following steps to remove and insert AC shunt power directors.

1 Begin this procedure with the housing open. Refer to ***To Open the Housing*** (on page 36).

2 To remove a power director, pull it straight out from the RF module.

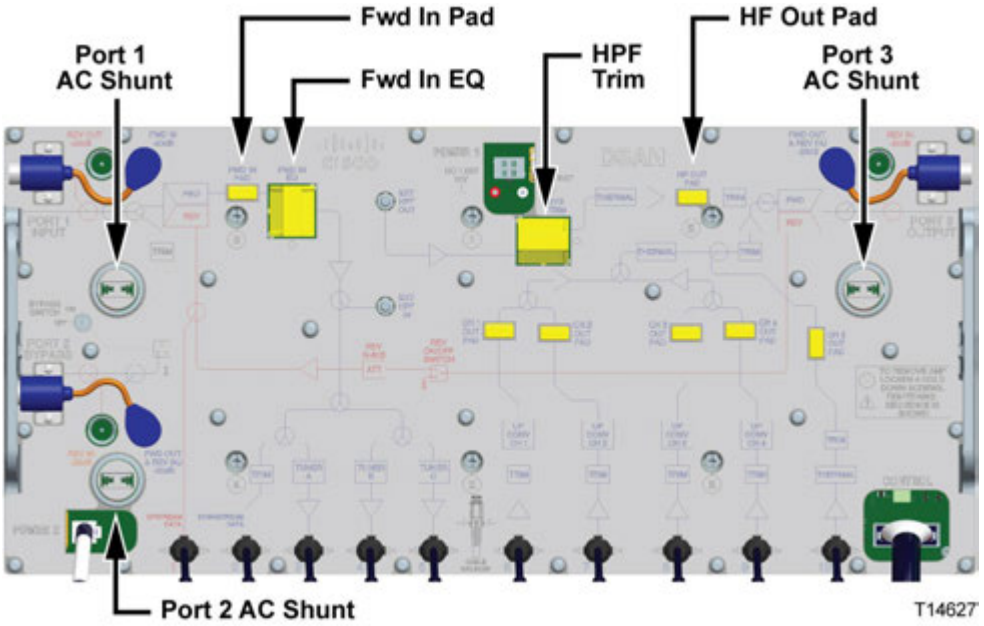

3 To insert a power director, refer to the systems design print to determine AC power routing and install the AC shunt power directors in the required locations.

4 Close the node housing**.** Refer to ***To Close the Housing*** (on page 36).

Installing and Removing the RF Module

The RF module is held in the housing base by six cross head screws, and is interconnected by cables to the power supply module, high-pass filter, and digital lid assembly.

To Install the RF Module

Complete the following steps to install the RF module.

1 Perform the following if you are working with an RF module where AC is present.

> **CAUTION:**
>
> **Failure to follow these instructions may cause damage to module RF connectors and housing seizure assemblies.**

- Install the AC shunts in the RF module *after* you install the module in the housing.
- Remove the AC shunts from the RF module *before* you remove the module from the housing.

2 Line up the RF connectors on the RF module and the housing, and then push the RF module into the housing.

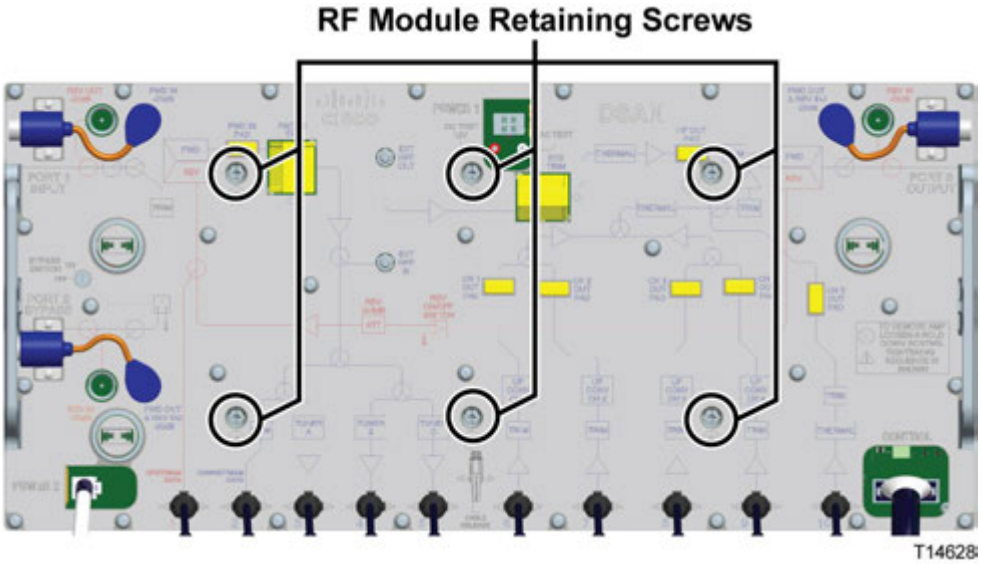

3 Secure the RF module to the housing by tightening the six module retaining screws.

Tighten slotted head screws to 6 to 9 in-lb (0.7 to 1.0 Nm), or cross head screws to 18 to 20 in-lb (2.0 to 2.25 Nm). Follow the tightening sequence prescribed by the numbers on the silkscreen beside each screw.

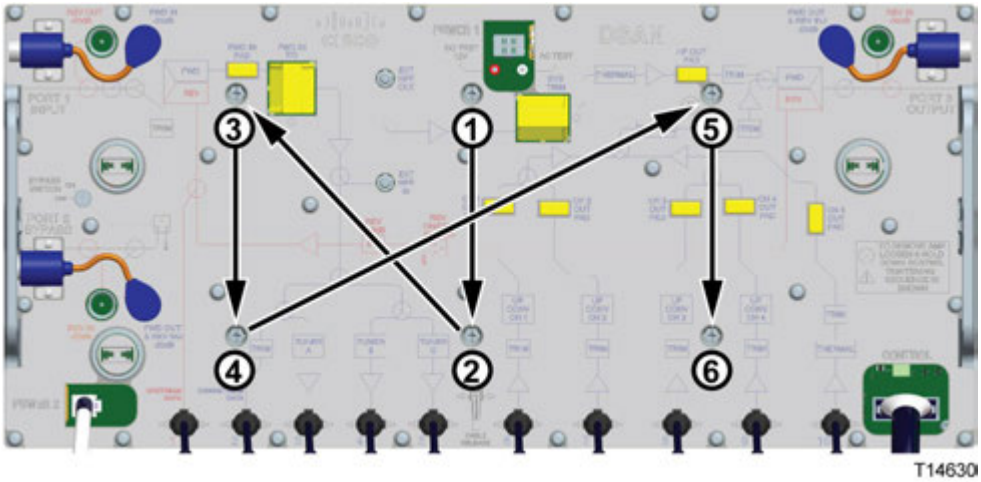

Important: The cover should lie completely flat on the RF module chassis.

4 Connect all interface cables to the RF module.

To Remove the RF Module

Complete the following steps to remove the RF module.

1 Open the node housing. Refer to ***To Open the Housing*** (on page 36).

2 Disconnect all interface cables from the RF module.

3 Using a screwdriver, loosen the six numbered retaining screws on the module.

4 With a firm grip, pull up on the RF module and remove it from the housing base.

Note: The RF module has notches that can be used as pry points if necessary to remove it from the housing base.

5 Close the node housing. Refer to ***To Close the Housing*** (on page 36).

Installing and Removing the High-Pass Filter Module

The high-pass filter module attaches to the housing base with two mounting screws.

To Install the High-Pass Filter Module

Complete the following steps to install the high-pass filter module.

1. Open the node housing. Refer to ***To Open the Housing*** (on page 36).
2. Hold the high-pass filter module above the left well of the housing with its label oriented as shown below.
3. Insert the module into the housing, and align its mounting screws with the holes at the base of the well.

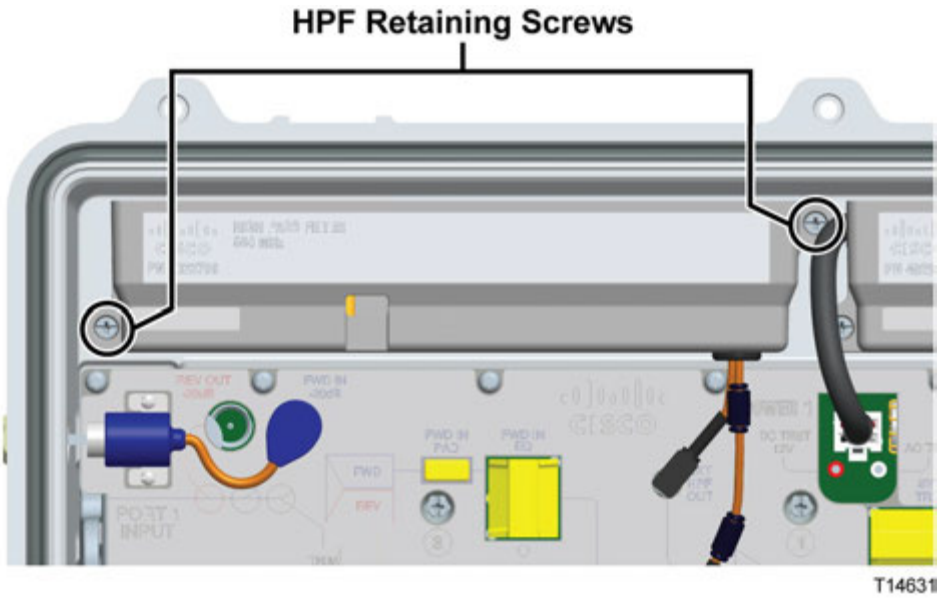

4. Secure the module by tightening the two module retaining screws. Tighten slotted head screws to 6 to 9 in-lb (0.7 to 1.0 Nm), or cross head screws to 18 to 20 in-lb (2.0 to 2.25 Nm).
5. Attach the two filter cables to the locations marked HPF IN and HPF OUT.
6. Close the housing. Refer to ***To Close the Housing*** (on page 36).

To Remove the High-Pass Filter Module

Complete the following steps to remove the high-pass filter module.

1. Open the node housing. Refer to ***To Open the Housing*** (on page 36).
2. Detach the two filter cables at the locations marked HPF IN and HPF OUT.
3. Using a screwdriver, loosen the two module retaining screws on the high-pass filter.
4. Carefully lift the module out of its well in the DSAN housing.
5. Close the housing. Refer to ***To Close the Housing*** (on page 36).

Installing and Removing the Power Supply Module

The power supply module attaches to the housing base with two mounting screws.

To Install the Power Supply Module

Complete the following steps to install the power supply module.

1. Open the node housing. Refer to ***To Open the Housing*** (on page 36).
2. Hold the power supply module above the right well of the housing with its label oriented as shown below.
3. Insert the module into the housing, and align its mounting screws with the holes at the base of the well.

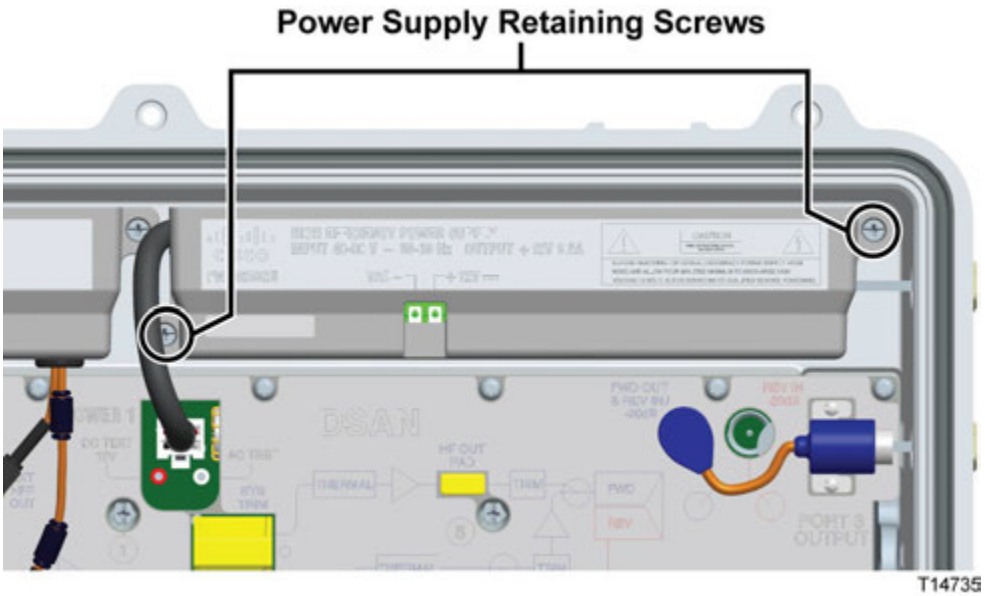

4. Secure the module by tightening the two module retaining screws. Tighten slotted head screws to 6 to 9 in-lb (0.7 to 1.0 Nm), or cross head screws to 18 to 20 in-lb (2.0 to 2.25 Nm).
5. Attach the power cable connector plug to the connector labeled POWER 1.
6. Close the housing. Refer to ***To Close the Housing*** (on page 36).

To Remove the Power Supply Module

Complete the following steps to remove the power supply module.

1. Open the node housing. Refer to ***To Open the Housing*** (on page 36).
2. Detach the power cable connector plug from the connector labeled POWER 1.
3. Using a screwdriver, loosen the two module retaining screws on the power supply.
4. Carefully lift the module out of its well in the DSAN housing.
5. Close the housing. Refer to ***To Close the Housing*** (on page 36).

Note on DSAN Digital Board

The DSAN digital board is not designed for servicing or modification in the field. Do not remove the digital board or its protective cover under any circumstances. Contact customer support for further assistance if needed.

4

Configuration and Testing

Introduction

This chapter provides instructions for configuring and testing the DSAN in your cable system.

Note: The DSAN provides for adjusting the forward path signal level and tilt, while the reverse path is factory set for unity gain flat across the passband.

In This Chapter

Configuration and Testing Procedures

The basic steps for configuring and testing the DSAN are as follows:

- Confirm the necessary headend software and server support
- Stage the DSAN hardware to meet installation requirements, verify signal levels, and make any adjustments needed
- Following installation, boot the DSAN and verify proper operation

This section describes each of these steps in detail.

Before You Begin

Before you begin, confirm that you have set up the DSAN according to the specifications in your design print.

The table below lists some items you may need to complete configuration.

You need a ...	To ...
copy of the design print	determine expected input and output signal levels.
torque wrench with half-inch socket	open and close the housing.
spectrum analyzer or signal analysis meter capable of working with frequencies up to the highest design frequency	determine input and output signal levels.
test point adapter (part number 562580) or F-81 female-to-female adapter	access the test points.
length of 75 Ω coaxial cable with F-connectors on each end	connect the test point adapter to the test equipment.
voltmeter	test the power supply AC and DC voltages.
reverse sweep receiver	test signals using a reverse sweep transmitter.

Confirming Headend Support

Network control of DSAN operation, like that of cable modems, is performed remotely and automatically from the headend. For this process to work, the headend equipment and software must be configured as described below.

DNCS

- DNCS with SR4.3 must be installed at the headend.
- CMTS Bridges must be set up for ADSG operation, as follows:
  - CMTS Bridge (Advanced DSG) for SFM normal data flow
  - CMTS Bridge (Advanced DSG with BT Headers) for SFM SI SCTE-65 data flow
  - CMTS Bridge (Advanced DSG with BT Headers) for SFM EAS SCTE-18 data flow
- Device types must be inserted into customer EMM files in DNCS and the certificate loaded on DNCS.

CMTS

- CMTS with software that supports ADSG must be installed at the headend.
- The CMTS must be set up for out of band (OOB) Bridge (Tunnel) operation, as follows:
  - For Traditional Data Tunnel, the client list must include the CA system ID (0xE00).
  - For SCTE-65 (SI) Data Tunnel, no special configuration is required.
  - For SCTE-18 (EAS) Data Tunnel, no special configuration is required.

DHCP Server

The DHCP server must issue DHCP Offer and Ack to the embedded cable modem (eCM) for each DSAN. The DHCP Offer and Ack contains the name and TFTP location of the eCM configuration file.

The DHCP server must also issue DHCP Offer and Ack to the embedded host (eHost) for each DSAN. The DHCP server must issue DHCP Offer and Ack with mandatory options 1, 3, 6, 15, 51, 54, 66, and 67 enabled. The DSAN verifies the existence of these fields within the DHCP Offer and Ack. If any of these DHCP fields are absent, the DSAN must reject the offered lease and restart its DHCP IP acquisition process.

DHCP option 66 is the IP address of the TFTP server that contains the configuration file for the DSAN. DHCP option 67 is the bootfile, which is the name of the configuration file that the DSAN loads from the TFTP server. Together, these options tell the DSAN where to find the configuration file needed to provision the unit.

The DSAN configuration file contains the VCT ID (hub ID). In order for the DSAN to obtain the correct SI data, the VCT ID for the cable plant that the DSAN is connected to must be correct. Otherwise, the DSAN cannot build the Source ID-to-EIA Output Channel map.

Supported DHCP Options

The following table lists all supported DHCP options.

DHCP Option Number	Option Description
0	Pad
255	End
1	Subnet Mask
2	Time Offset
3	Router Option
4	Time Server
6	Domain Name Server
7	Log Server
12	Host Name
15	Domain Name
23	Default Time-to-Live
43	Vendor Specific Information
50	Requested IP Address
51	IP Address Lease Time
54	Server Identifier
55	Parameter Request List
60	Vendor Class Identifier
61	Client-identifier
66	TFTP Server Name
67	Bootfile Name

Mandatory eMDTA DHCP Message Options

The following table lists all mandatory eMDTA DHCP Options in DISCOVER and REQUEST messages.

DHCP Option Number	Option Description
43	Vendor Specific Information
50	Requested IP Address
55	Parameter Request List

DHCP Option Number	Option Description
60	Vendor Class Identifier
61	Client-identifier
255	End

Mandatory eMDTA DHCP Option 55 Options

The following table lists all mandatory eMDTA DHCP options within Option 55.

DHCP Option Number	Option Description
1	Subnet Mask
2	Time Offset
3	Router Option
6	Domain Name Server
7	Log Server
15	Domain Name
23	Default Time-to-Live
51	IP Address Lease Time
54	Server Identifier

DHCP Option 60 and 43 Contents

The following table lists DHCP Option 60 and 43 Contents for an eMDTA within the MDTA.

DHCP Discover & Request Option	Value	Description
eMDTA Option 60	"mdta 1.0"	An mdta1.0 DSG-enabled eMDTA.
eMDTA Option 43 sub-option 1	"<null>"	List of sub-options (within Option 43) to be returned by server.
eMDTA Option 43 sub-option 2	"EMDTA"	Embedded set-top box.
eMDTA Option 43 sub-option 3	"ECM:EMDTA"	ECM = embedded CM EMDTA = embedded set-top.
eMDTA Option 43 sub-option 4	e.g., "123456"	Device serial number from MIB object docDevSerialNumber.
eMDTA Option 43 sub-option 5	e.g., "V1.2.3"	Hardware version number from <Hardware version> field in MIB object sysDescr.
eMDTA Option 43 sub-option 6	e.g., "V3.2.1"	Software version number from <Software version> field in MIB object sysDescr.
eMDTA Option 43 sub-option 7	e.g., "Boot 4.5.6"	Bootloader ROM version number from <Boot ROM version> field in MIB object sysDescr.
eMDTA Option 43 sub-option 8	e.g., "0204DF"	6-octet OUI as Vendor Identifier, eMDTA Option 43 sub-option 9, e.g., "Xman 200" Device model number from <Model number> field in MIB object sysDescr.

DHCP Discover & Request Option	Value	Description
eMDTA Option 43 sub-option 10	e.g., "XYZ Broadband"	Vendor name from <Vendor name> field in MIB object sysDescr.
eMDTA Option 43 sub-option 15	e.g., unit address of the CA	Client Conditional Access System vendor specific device identification, such as unit address for a Motorola CA Client.

TFTP Server

The Trivial File Transfer Protocol (TFTP) server hosts the configuration files. The DSAN downloads these files automatically during bootup based on information in the DHCP Offer and Ack, as is done with standard set-top boxes and cable modems.

Configuration File

The TFTP server must contain both the eCM configuration file and the eHost configuration files. These are two separate sets of files, and they can reside on two separate TFTP servers, if preferred.

The eHost uses the file name provided in Option 67 of the DHCP offer. The customer generally determines the naming convention for the configuration file residing on the TFTP server.

The following table summarizes the type-length-value (TLV) elements that a configuration file can include. The DSAN parses all TLV elements; elements that are not supported are identified in the table by asterisk (*).

Type	Length	Value	Description
217.8 *	1	1 or 0	Enables/disables Mixed Services port (analog portion only).
217.9 *	1	1 or 0	Enables/disables the Bypass port.
217.10.x	2	Source ID	Output channel map. Source ID to EIA channel number for non-auxiliary channels. Subtypes (217.10.x) are used to set the source ID for output channels, where x corresponds to the EIA channel number. Length of 2 refers to each subtype. The subtype value x may take values from 2 to 78 inclusive and from 95 to 99 inclusive. Setting Source ID to 0 (zero) explicitly mutes the designated output channel (no carrier). If the output channel map is not defined or in error, setting Source ID to 0 places the output channel in CW mode (unmodulated carrier).
217.20	2	Text	Configuration file version. This TLV is used to facilitate changes in the configuration file format; for example, to accommodate the change from in-band to out-of-band SI.
217.21	1	1 or 0	Enables/disables the Craft Interface.
217.22	41	Text	This TLV occurs at the end of the 217 section. It is the SHA1 sum of all preceding data in the 217 section.

Type	Length	Value	Description
217.25	2	VCT ID	Virtual Channel Table ID. This value defines the virtual channel table to be parsed for SI.
217.26.x	1	EIA output channel	Auxiliary output channel map. Auxiliary input ID to EIA channel number. Subtypes (217.26.x) are used to set the EIA output channel number for auxiliary input ID corresponding to x. Length of 2 refers to each subtype. The subtype value x may take values from 1 to 8. The EIA output channel may take values from 2 to 78 inclusive and from 95 to 99 inclusive.
217.27	2	SCTE 127	Source ID SCTE 127 Source ID. This source ID refers to the stream to be transcoded from SCTE 127 TVG2X data to SCTE 21 Luma/PAM data.
217.28 *	10	Text	Password of the Day Encrypted Seed. This seed is used to determine the password of the day, and must match the encrypted seed used with the Password of the Day software tool.
217.29	1	1 or 0	Enables/disables Test Mode. See description of Test Mode behavior below.
217.30.x *	1	1 or 0	Enables/disables Auxiliary Input EAS Force Tune. Subtypes (217.30.x) are used to set whether the auxiliary input ID corresponding to x will have its assigned output EIA channel force-tuned based on EAS events. Length of 1 refers to each subtype.
217.53.1	(1..32)	Text	SNMP v1/v2c community string.

* Not supported by the DSAN.

Test Mode

Test Mode allows certain user logins to be enabled or disabled. These logins allow access to specific debug and troubleshooting commands to be used by authorized Cisco engineers, customer labs, and support personnel.

Enable Mode

Setting TLV 217.29 to the value 1 enables Test Mode. This in turn enables the following user logins:

- root (Linux)
- dsan_eng
- labtest

These logins have tiered access to certain debug, test, and engineering commands to help test and troubleshoot the unit.

Disable Mode

Setting TLV 217.29 to the value 0 disables Test Mode. Once Test Mode is disabled, it cannot be enabled again without the unit being returned to Cisco. After disabling the unit, the only interfaces available to it are those described in ***CLI Diagnostics*** (on page 73), ***SNMP Management*** (on page 127), and ***Event Log*** (on page 185).

Configuring the DSAN Hardware

Configuring the DSAN hardware involves four main activities:

- Performing a basic power check
- Checking and adjusting input signal levels
- Checking and adjusting output signal levels
- Checking and adjusting DSAN embedded cable modem (eCM) signal levels

Hardware configuration is performed with the DSAN housing open. Before you begin, refer to ***To Open the Housing*** (on page 36).

When configuring the DSAN hardware, refer to the following block diagram for help with component and port locations.

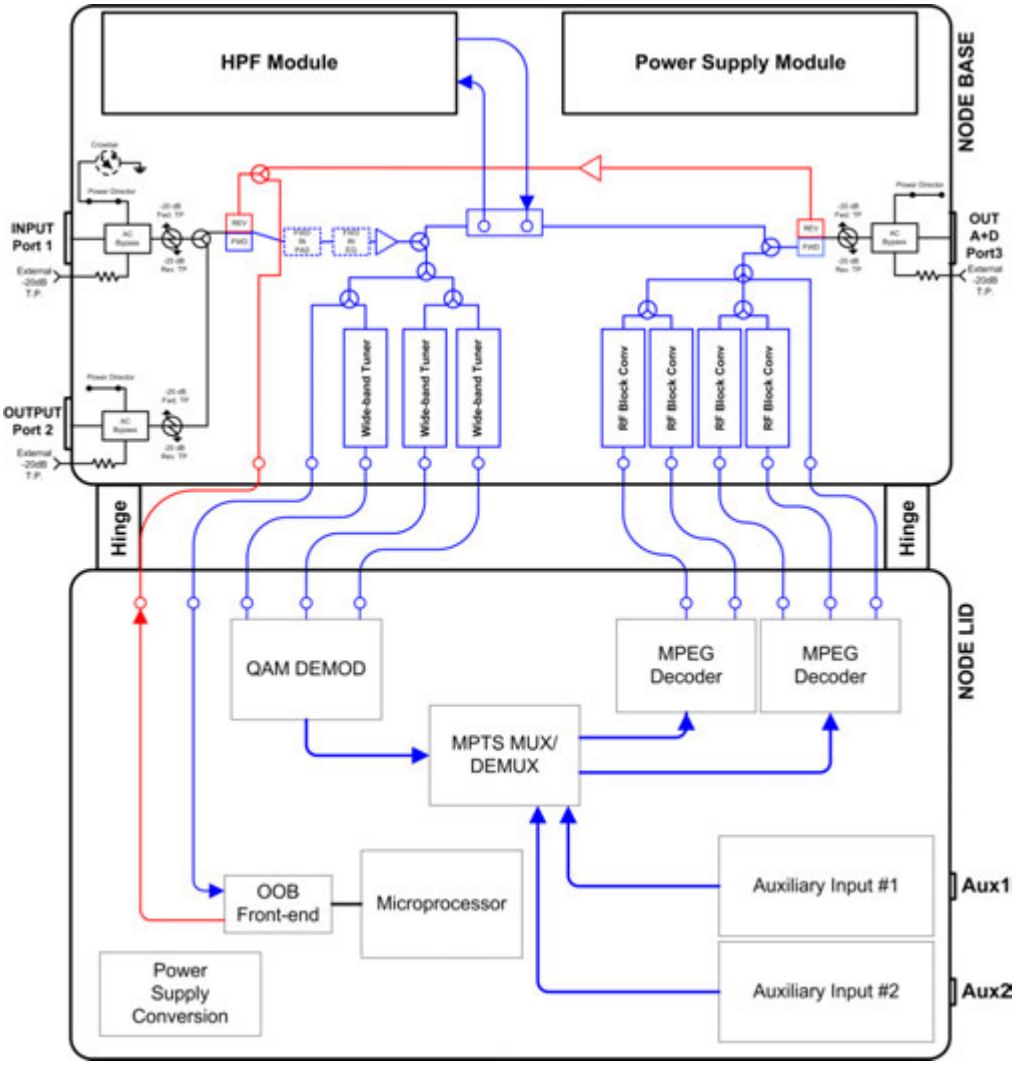

To Perform a Basic Power Check

After connecting the plant coax to the DSAN Input port, open the DSAN housing and use a digital multimeter (DMM) to check for the correct AC and DC voltages at the test lugs on the power supply module.

Important: Before testing, confirm that an AC shunt is installed at the port with AC power.

To Check and Adjust Input Signal Levels

The cable plant signals enters the DSAN unit at its Input port (Port 1). An input pad is used to set the downstream signal levels at the DSAN input, which in turn defines the signal levels at the DSAN input tuners. The nominal DSAN input signal level in the digital tier should be set to +4 dBmV. Analog carriers should be 6 dB higher in level. A plug-in input EQ is used to set the flatness of the input frequency spectrum. The input frequency spectrum should be flattened as much as possible.

Complete the following steps to set the input signal level and frequency spectrum flatness at the input to the DSAN unit.

1. Connect the cable plant to the Input port (Port 1) on the DSAN unit.
2. Connect the test equipment to the Input port test point (FWD IN -20 dB TP) on the DSAN unit.
3. Measure the signal levels at the lowest frequency and highest frequencies specified in the system design.
4. Adjust the FWD IN EQ to flatten the frequency spectrum. Adjust the FWD IN PAD to adjust the level of the input signals.

   Note: A FWD IN PAD value of 1 dB and a FWD IN EQ value of 0 dB give the proper setup for a flat input spectrum with digital signal levels at +4 dBmV (analog channels are +10 dBmV, or 6 dB higher than digital). Changes to the FWD IN PAD and FWD IN EQ values will not change the measured results at the FWD IN -20 dB test point because this test point is located ahead of the input accessories.

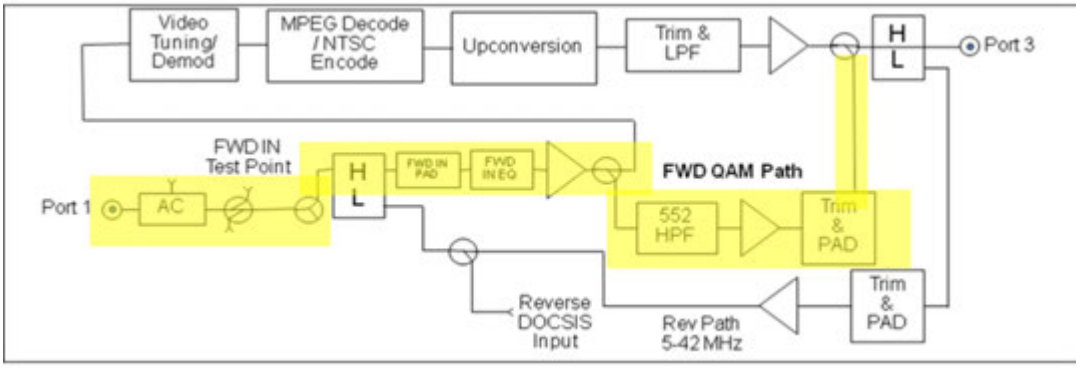

Reverse Path Signal Levels

The reverse path is unity gain (0 dB). The DSAN provides no internal adjustment for levels and tilt for the upstream signal. Although no reverse path setup is required, you should verify the proper level upstream of the DSAN.

To Check and Adjust Output Signal Levels

The signals generated by the DSAN exit the unit at the Mixed Services output port (Port 3). The nominal DSAN analog output level is + 20 dBmV. The digital portion of the DSAN output spectrum should be configured to be 6 dB down from the analog portion (nominally +14 dBmV).

The DSAN analog output signal levels are fixed and are not a function of the input power level to the DSAN. The operator can adjust the level of the digital tier signals (>564 MHz) at the Mixed Services output port (Port 3), if needed, by changing the FWD IN PAD value.

Note: Due to its RF output level, the next component in the network following the DSAN should be an amplifier, preferably a high gain dual with a low input signal requirement.

Complete the following steps to verify and set the signal levels for the output of the DSAN unit.

1. Connect the test probe to the Mixed Services output port (Port 3) test point (FWD OUT -20dB TP).
2. Monitor the output levels of all active channels between 585 MHz and the upper frequency limit of the plant.
   - **a** Note the highest and lowest signal levels over that frequency range.
   - **b** Add together the highest and lowest signal levels noted above, and then divide the result by 2.
   - **c** Use the resulting average value as the reference digital channel signal level for step 4 below.
3. Measure and note the output signal level of Channel 2 (55.25 MHz) at the Mixed Services output port (Port 3) test point (FWD OUT -20 dB TP). Use this value as the reference analog channel signal value for step 4 below.
4. Confirm that the reference analog channel signal level found above is 6 dB greater than the reference digital channel signal level found above. If necessary, adjust the FWD IN PAD value to achieve 6 dB difference between the reference analog and digital signal levels.
5. If any problems persist, see ***CLI Diagnostics*** (on page 73) for help with further investigation.

Bypass Output Port (Port 2)

For optional downstream use, this port replicates the input signal at Port 1. The signal level is -9 dB relative to the signal level at the Input port. This value is not internally adjustable.

To Check and Adjust eCM Signal Levels

The final step in DSAN RF setup is to adjust plant levels in the reverse signal path so that the upstream signal transmitted by the DSAN eCM is received at the correct level by the CMTS in the headend.

Notes:

- The downstream DOCSIS channel level is set up properly when the DSAN RF input levels are configured as described in the preceding sections.
- You can monitor upstream eCM power levels on CLI diag page 4.1 as described in ***CLI Diagnostics*** (on page 73). The power levels reported in CLI differ from those which you might otherwise try to measure at Port 1. The upstream power level reported in CLI is 13.7 dB higher than the level at Port 1 because it is measured internally before attenuation. For example, a CLI reported power level of 49 dBmV would imply a power level of (49 - 13.7 =) 35.3 dBmV measurable at Port 1.

The maximum upstream transmit level of the DSAN eCM is +54 dBmV. This level is attenuated by 13.7 dB internally, resulting in a maximum launch power of +40.3 dBmV as measured at Port 1. The actual eCM operating output power is set automatically by the DSAN eCM power ranging process in communication with the CMTS.

As with any eCM, the best signal-to-noise performance is achieved by having the DSAN eCM transmit upstream at the highest possible level while holding enough launch power in reserve to allow for worst-case plant fluctuations. To do this, you apply a *back-off* from the maximum launch power to find a target value for DSAN eCM transmit level under nominal plant conditions. You then adjust nominal reverse path plant levels between the DSAN and CMTS so that the eCM transmits at this target value.

The back-off that you apply to find the target eCM transmit level will vary with plant characteristics and with the location of the DSAN within the plant, making it difficult to provide a general figure. If your company has a back-off rule that eCM installers currently use on the plant, then apply the same rule when adjusting plant levels to achieve the desired DSAN upstream transmit level at Port 1.

For example, if your installers routinely back off the eCM upstream level 5 dB from maximum transmit level, DSAN upstream transmit power at Port 1 should measure (40.3 - 5) = +35.3 dBmV. When using the DSAN CLI diagnostic interface to monitor upstream power, the DSAN upstream transmit power should report (35.3 + 13.7 =) 49 dBmV due to the 13.7 dB measurement differential noted above.

Confirming Proper Bootup Operation

Given proper headend support and DSAN hardware setup, the DSAN will be configured automatically during the bootup period that immediately follows power-up.

Important: The DSAN bootup process takes several minutes to complete. There is no video output from the unit until the bootup process is complete.

To confirm proper bootup operation, choose the appropriate set of steps below. The verification sequence varies depending on whether the DSAN already has a valid configuration file loaded.

Bootup Sequence (Valid Configuration Stored)

Complete the following steps to monitor the bootup sequence that occurs when a valid configuration is stored in the DSAN cache.

1. Before applying power to the DSAN, open the unit and connect a PC laptop to the diagnostic port as described in ***CLI Diagnostics*** (on page 73).
2. Apply power. After about one minute, the console prints **DSAN Initializing…** and displays a progress bar.
3. After about two more minutes (three minutes from power-up), a **dsan login:** prompt appears on the PC laptop screen.
4. Log in to the DSAN using the default user ID **dsan** and password **dsan1234**. Both user ID and password are case-sensitive. The DSAN> prompt appears.
5. At the DSAN> prompt, type **diag** and then press **Enter** to display page 1 of the DSAN diagnostic screens. Verify that the POST (Power On Self Test) passed.

   The DSAN now performs two operations simultaneously. The first is to output video using the cached configuration. The second is to begin the cable modem registration process. In the next two steps, you will first confirm the video output, and then observe the cable registration process.
6. Confirm video output using the cached configuration, as follows:
   - At the >>> prompt, type **1** and then press **Enter**. (You can also press **Enter** on any diag page to refresh the information.)
   - Confirm that the DSAN configures the QAM frontend to DSAN (Tuners and QAM Demod). This shows up as **Starting Channel Remap** and **BL12k Setup** under the Remap State: entry.
   - Confirm that the front end successfully completes its configuration. Remap State changes to **Remap Send** as it configures the video decoders, and at completion, changes again to **Channel Remapped**.

- Confirm that there is video output from the DSAN on all configured channels. This point is reached approximately 4 minutes from power-up. The Demods: line should display X in use QAM demods and X locked QAM demods. The Channels line should display X provisioned channels and 0 errored channels.

7 Confirm successful cable modem registration and connection to the CMTS, as follows:

- At the >>> prompt, type **4** and then press **Enter**. The cable modem (CM) information page appears.
- Verify that CM registration completed successfully (see CM registration status field).
- Verify two-way communication between DSAN and CMTS (see configuration filename and status of "retrieved successfully").

The DSAN now will verify that the configuration on the Headend matches the one currently configured on the unit.

- If successful, the Provisioning State on diag page 1 will normally go to **Idle**.
- If an error occurs, an alarm will be present on diag page 3 identifying the error.

If the expected results do not occur at any stage in the bootup process, consult ***Troubleshooting*** (on page 122) for help in diagnosing and correcting the problem.

Bootup Sequence (No Configuration Stored on DSAN)

Complete the following steps to monitor the bootup sequence that occurs when there is no valid configuration file stored in the DSAN cache.

1 Before applying power to the DSAN, open the unit and connect a PC laptop to the diagnostic port as described in ***CLI Diagnostics*** (on page 73).

2 Apply power. After about one minute, the console prints **DSAN Initializing…** and displays a progress bar.

3 After about two more minutes (three minutes from power-up), a **dsan login:** prompt appears on the PC laptop screen.

4 Log in to the DSAN using the default user ID **dsan** and password **dsan1234**. Both user ID and password are case-sensitive. The DSAN> prompt appears.

5 At the DSAN> prompt, type **diag** and then press **Enter** to display page 1 of the DSAN diagnostic screens. Verify that the POST (Power On Self Test) passed.

The DSAN now begins connecting to the CMTS. If the DSAN has not been used on this headend before, this process can take up to 5 minutes.

6 Confirm successful cable modem registration and connection to the CMTS, as follows:

- At the >>> prompt, type **4** and then press **Enter**. The cable modem (CM) information page appears.

- Verify that CM registration completed successfully (see CM registration status field).
- Verify two-way communication between DSAN and CMTS (see configuration filename and status of "retrieved successfully").

7 The DSAN now builds a channel lineup based on the configuration downloaded and the Headend SI data.

- If successful, the Provisioning State on diag page 1 will go to **Idle**.
- If an error occurs, an alarm is displayed on diag page 4 identifying the error.

8 Confirm video output using the new configuration, as follows:

- At the >>> prompt, type **1** and then press **Enter**. (You can also press **Enter** on any diag page to refresh the information.)
- At this point DSAN should be outputting video on all configured channels. The Demods: line should now display X in use QAM demods and X locked QAM demods. The Channels line should display X provisioned channels and 0 errored channels.
- Confirm that the DSAN configures the QAM frontend to DSAN (Tuners and QAM Demod). This shows up as **Starting Channel Remap** and **BL12k Setup** under the Remap State: entry.
- Confirm that the front end successfully completes its configuration. Remap State changes to **Remap Send** as it configures the video decoders, and at completion, changes again to **Channel Remapped**.
- Confirm that there is video output from the DSAN on all configured channels. The Demods: line should display X in use QAM demods and X locked QAM demods. The Channels line should display X provisioned channels and 0 errored channels.

If the expected results do not occur at any stage in the bootup process, consult ***Troubleshooting*** (on page 122) for help in diagnosing and correcting the problem.

5

CLI Diagnostics

This chapter describes the diagnostic facilities available through the DSAN command line interface (CLI). It describes the procedures for accessing the CLI and for navigating its diagnostic screens.

In This Chapter

Using CLI Diagnostics

The DSAN diagnostic screens let you view the status and configuration of major DSAN components, software, alarms, and the network to which it is attached.

You gain access to these diagnostic screens through a laptop PC connected to the internal DSAN diagnostic connector. After booting the DSAN and logging into its CLI, you can navigate the diagnostic interface to view specific information as needed.

To Attach a Laptop PC

Complete the following steps to attach a laptop PC to the DSAN diagnostic connector.

1 Open the DSAN housing and locate the diagnostic connector on the digital lid assembly.

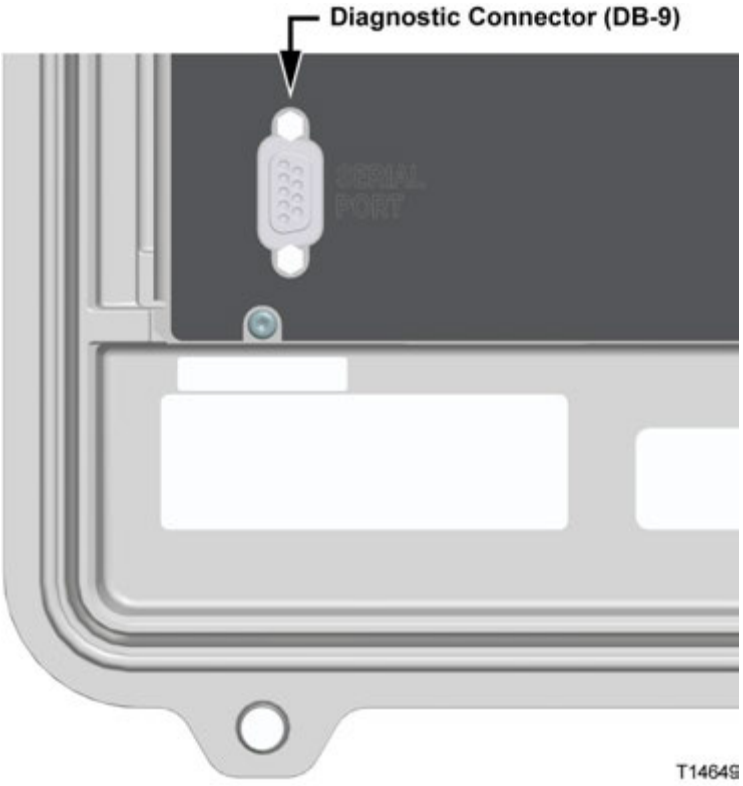

2 Connect a DB-9 serial cable from the laptop serial port to the DSAN diagnostic connector.

3 Power up the PC laptop, open a serial communications utility, and make the following settings:
   - 115.2 kbps
   - 8 data bits
   - 1 stop bit
   - No parity
   - Flow Control = None

To Log In to the DSAN CLI

Complete the following steps to log in to the DSAN CLI.

1 Apply power to the DSAN and allow up to 2 minutes for the following prompt to appear on the PC laptop screen.

```
dsan login:
```

2 At the login prompt, type **dsan** and then press **Enter**. The following prompt appears:

```
password:
```

3 At the password prompt, type **dsan1234** and then press **Enter**. The following prompt appears:

```
DSAN>
```

Using CLI Commands

This section describes the commands you can enter at the **DSAN>** prompt to learn about the current state and configuration of the DSAN.

Basic Commands

The following commands are available whether Test Mode is enabled or disabled.

diagnostics

Use the **diagnostics** (or simply **diag**) command to display diagnostic screens containing information about the current status and configuration of the DSAN.

You can enter **diag** by itself to go to page 1 of the diagnostic screens, shown below.

```
--------------------------------- DSAN Status ----------------------------------

POST Results        Pass                (p. 2.0)
Current Alarms:     0                   (p. 3.0)

DOCSIS State:             Connected - Idle
Provisioning State:       Idle
Remap State:              Channel Remapped

RF Summary
  Tuner A:          Locked              (p. 5.0)
  Tuner B:          Locked              (p. 5.0)
  Tuner C:          Locked              (p. 5.0)

  Demods:           In Use:      10     Locked: 10          (p. 7.0)
  Channels:         Provisioned: 82     Errors:  0          (p. 9.1 - 9.6)

Time of Service:    80 hours            Temperature:        41.5 C

Current Date/Time:        02-01-2010  20:17:38 UTC
Boot Time:                02-01-2010  20:07:24 UTC

------------- Pg:  1.0   <CR>:Refresh   n<CR>:Pg 2.0   x<CR>:Exit --------------
>>>
```

Or, you can enter **diag** followed by a valid page number to go directly to the designated page of the diagnostic screens.

The main diag pages are numbered 1-13. Some diag pages also have subpages. Entering **diag** followed by a valid subpage number (e.g., 9.1) takes you to the designated subpage.

Notes:

- All diag pages have a **>>>** prompt at the bottom that lets you navigate directly to any other diag page by entering the desired page number. This prompt also recognizes the navigation commands **p** (previous), **n** (next), and **s** (subpage), when appropriate.

- All diag pages may be refreshed by typing **Enter**.
- To exit diagnostics from any diag page, type **x** at the **>>>** prompt.

help

Enter the **help** command to display a list of the available diagnostic screens and CLI commands.

manual

Enter the command **manual** or the simpler **man** followed by the command name to display more detailed information about a particular CLI command.

For example, entering **manual diag** displays a brief description of the diag command.

exit

Enter the **exit** command to log out of the CLI.

Additional Commands

The following commands are only available when Test Mode is enabled.

sysreset

Use the **sysreset** command to force a reset of the DSAN unit.

reset factory defaults

Entering the command **reset factory defaults** resets the DSAN to its factory default configuration. It:

- Removes the stored (cached) configuration file and all log files.
- Clears all dynamic configuration settings, such as SNMP manager IP addresses and ports.
- Resets all event logging to the default (terse) mode for all categories.
- Deletes all saved DOCSIS settings, such as last known downstream and upstream frequencies and software download history.

Use this command to return the unit to a known operating state for testing or troubleshooting purposes.

Note: After executing this command, the DSAN unit will be configured to operate on the plant.

rev wink

Entering the command **rev wink** displays the current status of the reverse wink control. This control lets you enable, disable, or attenuate the DSAN reverse path.

You can change the status of the reverse wink control as follows:

- Enter the command **rev wink low** to remove all attenuation from the reverse path.
- Enter the command **rev wink pad** to add 6 dB of attenuation to the reverse path.
- Enter the command **rev wink off** to completely disable the reverse path.

You may find these control options useful as an aid to troubleshooting possible ingress on the reverse path.

Viewing DSAN Status

The DSAN Status screen summarizes the results of the power-on self test (POST), including any alarms discovered. It reports the current state of the DSAN and the status of its tuners, demodulators, and channels, and indicates the current time and temperature.

```
--------------------------------- DSAN Status ----------------------------------

POST Results        Pass                (p. 2.0)
Current Alarms:     0                   (p. 3.0)

DOCSIS State:             Connected - Idle
Provisioning State:       Idle
Remap State:              Channel Remapped

RF Summary
  Tuner A:          Locked              (p. 5.0)
  Tuner B:          Locked              (p. 5.0)
  Tuner C:          Locked              (p. 5.0)

  Demods:           In Use:      10     Locked: 10          (p. 7.0)
  Channels:         Provisioned: 82     Errors:  0          (p. 9.1 - 9.6)

Time of Service:    80 hours            Temperature:        41.5 C

Current Date/Time:        02-01-2010  20:17:38 UTC
Boot Time:                02-01-2010  20:07:24 UTC

------------- Pg:  1.0   <CR>:Refresh   n<CR>:Pg 2.0   x<CR>:Exit --------------
>>>
```

Field Descriptions

Field Name	Description
POST Results	Displays Pass or Fail to summarize results reported on diag page 2.0
Current Alarms	Displays a count of alarms displayed on diag page 3.0

Field Name	Description
DOCSIS State	Displays one of the following states: ■ Initialization ■ Start Registration ■ Registering ■ Registered ■ Registration Error ■ Start Parser ■ Parser Start Error ■ Start DHCP Request ■ Wait for SI Tables ■ DHCP Request Error ■ Config File Request ■ Config File Request Error ■ Connected - Idle ■ Connectivity Lost ■ Waiting for Connection ■ Connection Found
Provisioning State	Displays one of the following states: ■ Initialization ■ Check for Cache ■ Wait for Config ■ Process Config ■ Setup SI ■ Processing SI ■ Waiting for SI ■ Config File Error ■ Idle

Field Name	Description
Remap State	Displays one of the following states: ■ Initialization ■ Waiting for Config SI ■ Processing Config SI ■ Validating Config File ■ Starting Channel Remap ■ BL12K Setup ■ BL12K Setup Failed ■ Remap In Progress ■ Remap Send ■ Channel Remapped ■ Channel Remap Failed ■ Validating EAS Remap ■ Invalid EAS Remap ■ EAS Remap In Progress ■ EAS Remapped ■ EAS Remap Failed ■ Stopping EAS Remap ■ EAS Remap Send
RF Summary / Tuner A / Tuner B / Tuner C	Tuner status - displays one of the following states: ■ Locked - Tuner locked on the configured frequency ■ Unlocked - Tuner not locked on configured frequency ■ N/A - there was an error communicating with the tuner
Demods: In Use	Number of demodulators configured
Demods: Locked	Number of demodulators locked (no errors)
Channels: Provisioned	Number of channels provisioned
Channels: Errors	Number of channels in error
Time of Service	Total time the DSAN has been in operation
Temperature	DSAN temperature
Current Date/Time	Current UTC date and time
Boot Time	Time of last bootup (also UTC)

Basic Navigation

From this screen, you can:

- Press **Enter** to redraw the screen and update its information.
- Type **p** and then press **Enter** to redraw the screen and update its information.
- Type **n** and then press **Enter** to go to the Page 2.0 diagnostic screen.
- Type **x** and then press **Enter** to exit and return to the DSAN> prompt.
- At the **>>>** prompt, type any screen number decimal format (e.g., 3.0) and then press **Enter** to go directly to that screen.

Viewing CLI POST and Boot Results

The DSAN POST and Boot Results screen summarizes the results of the power-on memory checks and load tests. It also reports the last known reboot. Test status information is also displayed on this screen, indicating test mode and reverse wink switch status.

```
---------------------------- POST and Boot Results -----------------------------

Host CPU Memory:          Pass
Host NVM:                 Pass
Video Processor Memory:   Pass
Video Processor:          Pass
Video Processor Status:   Running
FPGA Load:                Pass
FPGA:                     Pass
Peripheral Hardware:      Pass
Last Boot Type:           PowerUpReboot
Secure Micro:             Pass

--------------------------------- Test Status ----------------------------------

Test Mode:                Enabled
Reverse Wink Switch:      Low




------ Pg:  2.0   <CR>:Refresh   p<CR>:Pg 1.0   n<CR>:Pg 3.0   x<CR>:Exit ------
>>>
```

Field Descriptions

Field Name	Description
Host CPU Memory	Displays Pass or Fail, or N/A if the test has not executed
Host NVM	Displays Pass or Fail, or N/A if the test has not executed
Video Processor Memory	Displays Pass or Fail, or N/A if the test has not executed
Video Processor	Displays Pass or Fail, or N/A if the test has not executed
Video Processor Status	Not Booted, Boot Failed, Running, Crashed, or N/A
FPGA Load	Displays Pass or Fail, or N/A if the test has not executed
FPGA	Displays Pass or Fail, or N/A if the test has not executed
Peripheral Hardware	Displays Pass or Fail, or N/A if the test has not executed

Field Name	Description
Last Boot Type	Displays one of the following values: ■ UnknownReboot ■ DavicChange * ■ UserReboot * ■ SystemReboot ■ TrapReboot - usually indicates a software error ■ SilentReboot - usually indicates a software error ■ BootLdrReboot - usually indicates a hardware failure ■ PowerUpReboot ■ CodeChange * ■ HardwareReset ■ WatchdogInterrupt **Note:** Values marked with * are not usually displayed in the field.
Secure Micro	Displays Pass or Fail, or N/A if the test has not executed
Test Mode	Displays Enabled or Disabled
Reverse Wink Switch	Displays one of the following values indicating the state of the reverse wink switch: ■ Low ■ Padded (-6 dB) ■ Off

Basic Navigation

From this screen, you can:

- Press **Enter** to redraw the screen and update its information.
- Type **p** and then press **Enter** to go to the Page 1.0 diagnostic screen.
- Type **n** and then press **Enter** to go to the Page 3.0 diagnostic screen.
- Type **x** and then press **Enter** to exit and return to the DSAN> prompt.
- At the **>>>** prompt, type any screen number decimal format (e.g., 3.0) and then press **Enter** to go directly to that screen.

Viewing Alarm Status

The Alarm Status screen displays a listing of all currently active DSAN alarms, including the time of the alarm and the value that triggered the alarm.

```
--------------------------------- Alarm Status ---------------------------------
Current Alarms
Sev        ID         Date       Time       Description



------ Pg:  3.0   <CR>:Refresh   p<CR>:Pg 2.0   n<CR>:Pg 4.0   x<CR>:Exit ------
>>>
```

Field Descriptions

Field Name	Description
Sev	Severity of the alarm - one of the following values: ■ emergency (1) ■ alert (2) ■ critical (3) ■ error (4) ■ warning (5) ■ notice (6) ■ information (7) ■ debug (8)
ID	Alarm or trap index (see trap list)
Date	Date of the alarm
Time	Time of the alarm in UTC

Field Name	Description
Description	Description of the alarm. For a list of possible alarms, see DSAN SNMP Alarms and Traps.

Basic Navigation

From this screen, you can:

- Press **Enter** to redraw the screen and update its information.
- Type **p** and then press **Enter** to go to the Page 2.0 diagnostic screen.
- Type **n** and then press **Enter** to go to the Page 4.0 diagnostic screen.
- Type **x** and then press **Enter** to exit and return to the DSAN> prompt.
- At the **>>>** prompt, type any screen number decimal format (e.g., 3.0) and then press **Enter** to go directly to that screen.

Viewing Network Status

The Network Status screen displays information about current IP network configuration in four pages:

- Network Configuration page (4.0)
- eCM Rx/Tx Details page (4.1)
- eCM Status Log page (4.2)
- eCM Available Flows based on ADSG Tunnels page (4.3)
- Out-of-Band (OOB) Receiver Information Page (4.4)

Network Configuration Page

The Network Configuration page appears as shown in the example below.

```
-------------------------------- Network Status --------------------------------

                    MAC Address         IP Address          Subnet Mask
eHost:              f4:5f:d4:48:95:12   192.168.23.6        255.255.254.0
eCM (DOCSIS):       f4:5f:d4:48:95:13   192.168.18.250      255.255.255.0

VCT ID (Hub ID):          1
eCM State:                Two Way


TFTP Server Name:         192.168.10.4
Config File Name:         dsan-f45fd4489512.cfg
Config File Status:       File loaded


eHost DHCP Lease Exp:     03-26-2012  22:17:12 UTC
Current Date/Time:        03-26-2012  19:21:54 UTC

eCM Rx/Tx Details  (p. 4.1)            eCM Status Log      (p. 4.2)
eCM OOB Flows      (p. 4.3)            OOB RX Info         (p. 4.4)
Davic Rx Details   (p. 4.5)            Davic Status Log    (p. 4.6)
Davic OOB Flows    (p. 4.7)
------ Pg:  4.0   s<CR>:Pg 4.1   p<CR>:Pg 3.0   n<CR>:Pg 5.0   x<CR>:Exit ------
>>>
```

Field Descriptions

Field Name	Description
Host	Displays host MAC address, IP address, and subnet mask
eCM (DOCSIS)	Displays eCM MAC address, IP address, and subnet mask
VCT ID (Hub ID)	Identifies the channel map to use in SCTE-65 SI tables
eCM State	Displays one of the following values: ■ Scanning for DOCSIS Downstream Channel ■ Downstream Scanning Complete ■ One Way ■ Two Way ■ Lost Communication - Scan restarted ■ Uninitialized
TFTP Server Name	Name of the TFTP server from which the config file is to be downloaded
Config File Name	Displays the name of file to be loaded from the TFTP server along with the config file status. Config file status message will be based on one of the following scenarios: **1** File not loaded, config file caching enabled – File not currently available; using previously saved configuration OR – File not currently available; no previously saved configuration available **2** File not loaded, config file caching disabled – File not currently available; saved configuration disabled **3** File loaded successfully – File loaded **4** Invalid file loaded, config file caching enabled – File invalid; using previously saved configuration **5** Invalid file loaded, config file caching disabled – File invalid; saved configuration disabled
eMDTA DHCP Lease Exp	UTC date and time of eMDTA DHCP lease expiration
Current Date/Time	Current UTC date and time

Note: All fields display N/A during initialization and registration.

Basic Navigation

From this screen, you can:

- Press **Enter** to redraw the screen and update its information.
- Type **p** and then press **Enter** to go to the Page 3.0 diagnostic screen.
- Type **s** and then press **Enter** to go to the first subpage (4.1), shown below.
- Type **n** and then press **Enter** to go to the Page 5.0 diagnostic screen.
- Type **x** and then press **Enter** to exit and return to the DSAN> prompt.
- At the **>>>** prompt, type any screen number decimal format (e.g., 3.0) and then press **Enter** to go directly to that screen.

eCM Rx/Tx Details Page

The eCM Rx/Tx Details page appears as shown in the example below.

```
-------------------------------- Network Status --------------------------------

eCM Rx/Tx Details

    Docsis Version Supported = 2.0

    Downstream Freq          = 555000000 Hz
    Downstream Channel Width = 6000000 Hz
    Downstream Power Level   = +6.70 dBmV
    Downstream S/N Level     = 32.10 dB
    Downstream QAM Mode      = QAM256
    Downstream Annex         = annexB
    QAM Interleave           = 8 (I8, J16)

    UnErrored Counter ------------> 46173108
    Correctable Errors Counter ---> 23
    UnCorrectable Errors Counter -> 5

    Upstream Frequency      = 38800000 Hz
    Upstream Channel Width  = 6400000 Hz
    Upstream Power Level    = +45.50 dBmV

------ Pg:  4.1   <CR>:Refresh   p<CR>:Pg 4.0   n<CR>:Pg 4.2   x<CR>:Exit ------
>>>
```

Field Descriptions

Field Name	Description
Docsis Version Supported	DOCSIS specification version
Downstream Freq	DOCSIS Receiver tuner frequency in Hz
Downstream Channel Width	Receiver bandwidth in Hz
Downstream Power Level	Receiver power level in dBmV **Note:** This value represents the downstream power level present at the embedded cable modem on the digital board, which is 9.5 dB lower than the power level at the DSAN input port. For example, the 6.7 dBmV value shown here implies (6.7 + 9.5 =) 16.2 dBmV at the DSAN input port.
Downstream S/N Level	Receiver signal-to-noise ratio in dB
Downstream QAM Mode	Modulation mode - QAM64 or QAM256
Downstream Annex	Annex type - A, B, or C
QAM Interleave	QAM modulation interleave value
UnErrored Counter	Number of packets received without errors

Field Name	Description
Correctable Errors Counter	Number of packets with errors that were correctable
Uncorrectable Errors Counter	Number of packets with errors that were not correctable
Upstream Frequency	Transmitter frequency in Hz
Upstream Channel Width	Transmitter bandwidth in Hz
Upstream Power Level	Transmitter power level in dBmV **Note:** This value represents the upstream power level present at the embedded cable modem on the digital board, which is 13.7 dB higher than the power level at the DSAN input port. For example, the 45.5 dBmV value shown here implies (45.5 - 13.7 =) 31.8 dBmV at the DSAN input port.

Basic Navigation

From this screen, you can:

- Press **Enter** to redraw the screen and update its information.
- Type **p** and then press **Enter** to go to the Page 4.0 diagnostic screen.
- Type **n** and then press **Enter** to go to the next subpage (4.2), shown below.
- Type **x** and then press **Enter** to exit and return to the DSAN> prompt.
- At the **>>>** prompt, type any screen number decimal format (e.g., 3.0) and then press **Enter** to go directly to that screen.

eCM Status Log Page

The eCM Status Log page appears as shown in the example below.

```
-------------------------------- Network Status --------------------------------

eCM Status Log

  Current Date/Time:  06-02-2010  20:27:40 UTC

    Empty
    06-02 20:12:53 - Rx Freq scanning started
    06-02 20:12:55 - scanning completed, freq = 555000000 Hz, qamMode = 256
    06-02 20:12:55 - Downstream Locked, freq = 555000000, power = -0.30 dBmV
    06-02 20:12:56 - Acquired OOB Data Connectivity
    06-02 20:12:57 - OOB Data Directory Ver Changed OLD = 0x00000000, New = 0x01000000
    06-02 20:13:00 - started Tx ranging, UCID = 4
    06-02 20:13:00 - completed Tx ranging successfully, UCID = 4
    06-02 20:13:01 - started DHCP
    06-02 20:13:01 - eCM DHCP completed, IP = 192.168.19.61
    06-02 20:13:01 - started TFTP of eCM config file
    06-02 20:13:02 - completed TFTP of eCM config file
    06-02 20:13:02 - CMTS Registration Complete
    06-02 20:13:02 - in Two-Way operational state, UCID = 4
    06-02 20:13:03 - Acquired Interactive Status

------ Pg:  4.2   <CR>:Refresh   p<CR>:Pg 4.1   n<CR>:Pg 4.3   x<CR>:Exit ------
>>>
```

Field Descriptions

This page displays a running log of the last 15 status messages provided by the eCM. As more than 15 messages are received, earlier messages scroll off the page and are no longer available for viewing.

Basic Navigation

From this screen, you can:

- Press **Enter** to redraw the screen and update its information.
- Type **p** and then press **Enter** to go to the Page 4.1 diagnostic screen.
- Type **n** and then press **Enter** to go to the next subpage (4.3), shown below.
- Type **x** and then press **Enter** to exit and return to the DSAN> prompt.
- At the **>>>** prompt, type any screen number decimal format (e.g., 3.0) and then press **Enter** to go directly to that screen.

eCM Available Flows based on ADSG Tunnels Page

The eCM Available Flows based on ADSG Tunnels page appears as shown in the example below.

```
-------------------------------- Network Status --------------------------------

eCM Available Flows based on ADSG Tunnels

     Flow - Client ID --------- Dst IP ---------- Src IP ---------- Port[min,max]
       1    00:01:A6:D0:0B:1E   127.1.0.1        192.168.10.253     [2000,13821]
       2    0E:00               127.1.0.2        192.168.10.253     [2000,2000]
       3    0E:00               127.1.0.3        192.168.10.253     [2001,2001]
       4    0E:00               127.1.0.4        192.168.10.253     [2002,13817]
       5    0E:00               127.1.0.5        192.168.10.253     [13818,13821]
       6    00:01               127.1.0.6        192.168.10.253     [3001,3001]
       7    00:02               127.1.0.7        0.0.0.0            [4098,4098]









------ Pg:  4.3   <CR>:Refresh   p<CR>:Pg 4.2   n<CR>:Pg 4.4   x<CR>:Exit ------
>>>
```

Field Descriptions

Field Name	Description
Flow	Identifier assigned by the eCM to denote a range of destination port addresses that data packets can be received using an associated IP socket interface
Client ID	Client ID associated with the flow specified in the ADSG DCD tables
Dst IP	Internal destination IP address that this part of the data flow is remapped to use. The application opens a socket for this interface to receive data.
Src IP	Source IP address of the data flow being received
Port[min,max]	Destination IP port address range mapped to this data flow. Most port numbers are associated with a well-known data type.

Basic Navigation

From this screen, you can:

- Press **Enter** to redraw the screen and update its information.
- Type **p** and then press **Enter** to go to the Page 4.2 diagnostic screen.
- Type **n** and then press **Enter** to go to the next subpage (4.4), shown below.
- Type **x** and then press **Enter** to exit and return to the DSAN> prompt.
- At the **>>>** prompt, type any screen number decimal format (e.g., 3.0) and then press **Enter** to go directly to that screen.

OOB Receiver Information Page

The OOB Receiver Information page appears as shown in the example below.

```
-------------------------------- Network Status --------------------------------

OOB RX Info

    OOB Parser Name     State        Packets     OOB Source
    -------------------------------------------------------
    SI Parser --------> Running         5111       DOCSIS
    EAS Parser -------> Running            1       DOCSIS
    DSMCC Parser -----> Running           59       DOCSIS
    ...UNCONFIG ------> Running           22       DOCSIS
    ...UNPASSTHRU ----> Running           37       DOCSIS
    EMM Parser -------> Running            0       DOCSIS
    ...EMMs Pending Processing ---------->  0 <--









------ Pg:  4.4   <CR>:Refresh   p<CR>:Pg 4.3   n<CR>:Pg 4.5   x<CR>:Exit ------
>>>
```

Field Descriptions

Field Name	Description
SI Parser	Number of packets parsed by the SCTE-65 SI parser thread
EAS Parser	Number of packets parsed by the SCTE-18 EAS parser thread
DSMCC Parser	Number of DSMCC packets parsed by the DSMCC parser. This is further broken down into the number of UNCONFIG and UNPASSTHRU messages parsed.
EMM Parser	Number of OOB PowerKEY EMM Conditional Access packets received to be processed by the Secure Micro. "In queue" represents the number of packets waiting to be processed by the Secure Micro.

Basic Navigation

From this screen, you can:

- Press **Enter** to redraw the screen and update its information.
- Type **p** and then press **Enter** to go to the Page 4.3 diagnostic screen.
- Type **n** and then press **Enter** to go to the next subpage (4.5), shown below.
- Type **x** and then press **Enter** to exit and return to the DSAN> prompt.
- At the **>>>** prompt, type any screen number decimal format (e.g., 3.0) and then press **Enter** to go directly to that screen.

DAVIC Rx Details Page

The DAVIC Rx Details page appears as shown in the example below.

Note: As indicated by the message on this page, DAVIC is not supported by the DSAN 8200.

```
-------------------------------- Network Status --------------------------------

DAVIC Rx Details not available on this platform.









------ Pg:  4.5   <CR>:Refresh   p<CR>:Pg 4.4   n<CR>:Pg 4.6   x<CR>:Exit ------
>>>
```

Basic Navigation

From this screen, you can:

- Press **Enter** to redraw the screen and update its information.
- Type **p** and then press **Enter** to go to the Page 4.4 diagnostic screen.
- Type **n** and then press **Enter** to go to the next subpage (4.6), shown below.
- Type **x** and then press **Enter** to exit and return to the DSAN> prompt.
- At the **>>>** prompt, type any screen number decimal format (e.g., 3.0) and then press **Enter** to go directly to that screen.

DAVIC Status Page

The DAVIC Status page appears as shown in the example below.

Note: As indicated by the message on this page, DAVIC is not supported by the DSAN 8200.

```
-------------------------------- Network Status --------------------------------

DAVIC Status not available on this platform.









------ Pg:  4.6   <CR>:Refresh   p<CR>:Pg 4.5   n<CR>:Pg 4.7   x<CR>:Exit ------
>>>
```

Basic Navigation

From this screen, you can:

- Press **Enter** to redraw the screen and update its information.
- Type **p** and then press **Enter** to go to the Page 4.5 diagnostic screen.
- Type **n** and then press **Enter** to go to the next subpage (4.7), shown below.
- Type **x** and then press **Enter** to exit and return to the DSAN> prompt.
- At the **>>>** prompt, type any screen number decimal format (e.g., 3.0) and then press **Enter** to go directly to that screen.

DAVIC OOB Flows Page

The DAVIC OOB Flows page appears as shown in the example below.

Note: As indicated by the message on this page, DAVIC is not supported by the DSAN 8200.

```
-------------------------------- Network Status --------------------------------

DAVIC OOB Flows not available on this platform.









------ Pg:  4.7   <CR>:Refresh   p<CR>:Pg 4.6   n<CR>:Pg 5.0   x<CR>:Exit ------
>>>
```

Basic Navigation

From this screen, you can:

- Press **Enter** to redraw the screen and update its information.
- Type **p** and then press **Enter** to go to the Page 4.6 diagnostic screen.
- Type **n** and then press **Enter** to go to the Page 5.0 diagnostic screen.
- Type **x** and then press **Enter** to exit and return to the DSAN> prompt.
- At the **>>>** prompt, type any screen number decimal format (e.g., 3.0) and then press **Enter** to go directly to that screen.

Viewing Tuner Status

The Tuner Status screen displays the power state, PLL status, center frequency, and demodulator status of each of the three tuners in the DSAN.

```
--------------------------------- Tuner Status ---------------------------------
                    Tuner A             Tuner B             Tuner C
Power State:        On                  On                  On
PLL Status:         Locked              Locked              Locked
Center Freq:        528000000           750000000           810000000
Demod Status: (L=Locked, U=Unlocked)
  0                   L
  1                   L
  2                   L
  3                   L
  4                   L
  5                                       L
  6                                       L
  7                                                           L
  8                                                           L
  9                                                           L
 10
 11
 12
 13
 14
 15
------ Pg:  5.0   <CR>:Refresh   p<CR>:Pg 4.0   n<CR>:Pg 6.0   x<CR>:Exit ------
>>>
```

Field Descriptions

Field Name	Description
Power State	State of Tuner A, B, or C - On, Off, or N/A if there is a problem communicating with the tuner
PLL Status	Displays Not Used, Locked, Unlocked, or N/A as appropriate
Center Freq	Displays wideband tuner center frequency in Hz

Basic Navigation

From this screen, you can:

- Press **Enter** to redraw the screen and update its information.
- Type **p** and then press **Enter** to go to the Page 4.0 diagnostic screen.
- Type **n** and then press **Enter** to go to the Page 6.0 diagnostic screen.
- Type **x** and then press **Enter** to exit and return to the DSAN> prompt.
- At the **>>>** prompt, type any screen number decimal format (e.g., 3.0) and then press **Enter** to go directly to that screen.

Viewing Demodulator Configuration

The Demodulator Configuration screen lists the 16 demodulators in the DSAN with their current status and associated frequency, QAM mode, symbol rate, and tuner allocation.

```
-------------------------- Demodulator Configuration ---------------------------

Demod        State        Tuner        Freq(kHz)    QAM Mode     Sym Rate
  0          Enabled        A            507000       256         5360537
  1          Enabled        A            513000       256         5360537
  2          Enabled        A            519000       256         5360537
  3          Enabled        A            525000       256         5360537
  4          Enabled        A            531000       256         5360537
  5          Enabled        B            729000        64         5056941
  6          Enabled        B            735000       256         5360537
  7          Enabled        C            789000       256         5360537
  8          Enabled        C            795000       256         5360537
  9          Enabled        C            807000       256         5360537
 10          Disabled      N/A           N/A          N/A          N/A
 11          Disabled      N/A           N/A          N/A          N/A
 12          Disabled      N/A           N/A          N/A          N/A
 13          Disabled      N/A           N/A          N/A          N/A
 14          Disabled      N/A           N/A          N/A          N/A
 15          Disabled      N/A           N/A          N/A          N/A


------ Pg:  6.0   <CR>:Refresh   p<CR>:Pg 5.0   n<CR>:Pg 7.0   x<CR>:Exit ------
>>>
```

Field Descriptions

Field Name	Description
Demod	Indicates the demodulator number (0-15)
Enable	Current demodulator status - Enabled or Disabled
Tuner	Identifies the tuner associated with the demodulator - A, B, or C
Freq(kHz)	Demodulator frequency (not wideband tuner frequency) in kHz, or N/A if not used
QAM Mode	Indicates the demodulator QAM mode - 64, 256, or N/A if not in use
Sym Rate	Indicates the demodulator symbol rate, or N/A if not in use

Basic Navigation

From this screen, you can:

- Press **Enter** to redraw the screen and update its information.
- Type **p** and then press **Enter** to go to the Page 5.0 diagnostic screen.
- Type **n** and then press **Enter** to go to the Page 7.0 diagnostic screen.
- Type **x** and then press **Enter** to exit and return to the DSAN> prompt.
- At the **>>>** prompt, type any screen number decimal format (e.g., 3.0) and then press **Enter** to go directly to that screen.

Viewing Demodulator Status

The Demodulator Status screen lists the 16 demodulators in the DSAN with their current status and corresponding power level and data statistics.

```
------------------------------ Demodulator Status ------------------------------

Demod      Status       PwrLvl        RS Tot      RS Cor     RS Uncor     RS Err
                        (dBmV)         Blks        Blks        Blks         (%)
  0        Locked       33.39       4533389           0           0           0
  1        Locked       34.69       4532947           0           0           0
  2        Locked       35.52       4533001           0           0           0
  3        Locked       36.68       4533963           0           0           0
  4        Locked       37.17       4532986           0           0           0
  5        Locked       34.93       3150437           0           0           0
  6        Locked       35.67       4533902          10           0           0
  7        Locked       36.23       4522045           0           0           0
  8        Locked       36.92       4521631           0           0           0
  9        Locked       37.63       4521407           0           0           0
 10        Disabled      N/A            N/A         N/A         N/A         N/A
 11        Disabled      N/A            N/A         N/A         N/A         N/A
 12        Disabled      N/A            N/A         N/A         N/A         N/A
 13        Disabled      N/A            N/A         N/A         N/A         N/A
 14        Disabled      N/A            N/A         N/A         N/A         N/A
 15        Disabled      N/A            N/A         N/A         N/A         N/A


------ Pg:  7.0   <CR>:Refresh   p<CR>:Pg 6.0   n<CR>:Pg 8.0   x<CR>:Exit ------
>>>
```

Field Descriptions

Field Name	Description
Demod	Indicates the demodulator number (0-15)
Status	Indicates current demodulator status - Locked or Unlocked (indicating presence of signal), or Disabled (if not in use)
PwrLvl (dBmV)	Indicates demodulator power level in dBmV
RS Tot Blks	Indicates Reed-Solomon Error Correction Statistics - Total Blocks
RS Cor Blks	Indicates Reed-Solomon Error Correction Statistics - Corrected Blocks
RS Uncor Blks	Indicates Reed-Solomon Error Correction Statistics - Uncorrectable Blocks
RS Err	Indicates Reed-Solomon Error Correction Statistics - Total Error percentage, calculated as follows: 100 * ((RS Cor Blocks + RS Uncor Blocks) / RS Tot Blocks)

Basic Navigation

From this screen, you can:

- Press **Enter** to redraw the screen and update its information.
- Type **p** and then press **Enter** to go to the Page 6.0 diagnostic screen.
- Type **n** and then press **Enter** to go to the Page 8.0 diagnostic screen.
- Type **x** and then press **Enter** to exit and return to the DSAN> prompt.
- At the **>>>** prompt, type any screen number decimal format (e.g., 3.0) and then press **Enter** to go directly to that screen.

Viewing Demodulator Channel Assignments

The Demodulator Channel Assignments screen lists the channel assignments for each demodulator in the DSAN.

```
----------------------- Demodulator Channel Assignments ------------------------

Channel Assignments Per Demodulator:

00  01   02   03   04   05   06   07   08   09   10   11   12   13   14   15
 2  17   32   48   57   65   67   72   77   97
 3  18   33   49   58   66   68   73   78   98
 4  19   34   50   59        69   74   95   99
 5  20   35   51   60        70   75   96
 6  21   36   52   61        71   76
 7  22   37   53   62
 8  23   38   54   63
 9  24   39   55   64
10  25   40   56
11  26   41
12  27   42
13  28   43
14  29   44
15  30   45
16  31   46
         47

------ Pg:  8.0   <CR>:Refresh   p<CR>:Pg 7.0   n<CR>:Pg 9.0   x<CR>:Exit ------
>>>
```

Field Descriptions

In this screen, the channels assigned to each demodulator are listed in columns under the corresponding demodulator number (00-15).

Basic Navigation

From this screen, you can:

- Press **Enter** to redraw the screen and update its information.
- Type **p** and then press **Enter** to go to the Page 7.0 diagnostic screen.
- Type **n** and then press **Enter** to go to the Page 9.0 diagnostic screen.
- Type **x** and then press **Enter** to exit and return to the DSAN> prompt.
- At the **>>>** prompt, type any screen number decimal format (e.g., 3.0) and then press **Enter** to go directly to that screen.

Viewing Service Map Status

The Service Map Status screen provides access to subpages that list the full channel lineup for the service offering and identify the source and status of each channel. The list includes references to diagnostic screens that contain configuration details for each channel. See ***Viewing Channel Configuration*** (on page 110) for more information.

```
------------------------------ Service Map Status ------------------------------

The following sub-pages will display the Service Mapping Summary Tables.
Select "s" to enter the sub-pages, "n" to proceed to the next page, or
"p" to proceed to the previous page.



----- Pg:  9.0   s<CR>:Pg 9.1   p<CR>:Pg 8.0   n<CR>:Pg 10.0   x<CR>:Exit ------
>>>
```

Type **s** and then press **Enter** to navigate to the first subpage, shown below. This sample screen (page 9.1) shows an encrypted portion of the channel lineup (Encrypt = Y).

```
------------------------------ Service Map Status ------------------------------

EIA CH     Source      Provis      Encrypt     Src ID      Status      Ref Page
   2        QAM          Y           Y          2130        OK          10.2
   3        QAM          Y           Y          2131        OK          10.3
   4        QAM          Y           Y          2132        OK          10.4
   5        QAM          Y           Y          2133        OK          10.5
   6        QAM          Y           Y          2134        OK          10.6
   7        QAM          Y           Y          2135        OK          10.7
   8        QAM          Y           Y          2136        OK          10.8
   9        QAM          Y           Y          2137        OK          10.9
  10        QAM          Y           Y          2138        OK          10.10
  11        QAM          Y           Y          2139        OK          10.11
  12        QAM          Y           Y          2140        OK          10.12
  13        QAM          Y           Y          2141        OK          10.13
  14        QAM          Y           Y          2142        OK          10.14
  15        QAM          Y           Y          2143        OK          10.15
  16        QAM          Y           Y          2144        OK          10.16
  17        QAM          Y           Y          2145        OK          10.17


------ Pg:  9.1   <CR>:Refresh   p<CR>:Pg 9.0   n<CR>:Pg 9.2   x<CR>:Exit ------
>>>
```

Type **s** and then press **Enter** to navigate to the next subpage, and so on to page through the entire channel lineup. The following screen (page 9.5) shows a non-encrypted portion of the channel lineup (Encrypt = N).

```
------------------------------ Service Map Status ------------------------------

EIA CH     Source      Provis      Encrypt     Src ID      Status      Ref Page
  66        QAM          Y           N          1290        OK          10.66
  67        QAM          Y           N          1291        OK          10.67
  68        QAM          Y           N          1292        OK          10.68
  69        QAM          Y           N          1293        OK          10.69
  70        QAM          Y           N          1294        OK          10.70
  71        QAM          Y           N          1295        OK          10.71
  72        QAM          Y           N          1213        OK          10.72
  73        QAM          Y           N          1214        OK          10.73
  74        QAM          Y           N          1215        OK          10.74
  75        QAM          Y           N          1216        OK          10.75
  76        QAM          Y           N          1217        OK          10.76
  77        QAM          Y           N          1218        OK          10.77
  78        QAM          Y           N          1219        OK          10.78



------ Pg:  9.5   <CR>:Refresh   p<CR>:Pg 9.4   n<CR>:Pg 9.6   x<CR>:Exit ------
>>>
```

Field Descriptions

Field Name	Description
EIA CH	Indicates the EIA output channel number - 2-78 and 95-99
Source	Indicates the program source for the channel - QAM, DAXI, USER, or N/A if not in use
Provis	Indicates whether the channel is provisioned - Y or N
Src ID	Source ID, a unique service on a given hub
Status	Indicates the current channel status - OK, Not Authorized, Error, or Not Used
Ref Page	Identifies the diag subpage containing channel details

Basic Navigation

From each subpage, you can:

- Press **Enter** to redraw the screen and update its information.
- Type **p** and then press **Enter** to go to the Page 9.(x-1) diagnostic screen.
- Type **n** and then press **Enter** to go to the Page 9.(x+1) diagnostic screen.
- Type **x** and then press **Enter** to exit and return to the DSAN> prompt.
- At the **>>>** prompt, type any screen number in decimal format (e.g., 3.0) and then press **Enter** to go directly to that screen.

Viewing Channel Configuration

The Channel Configuration screen provides access to subpages for the individual channels that make up the service offering. Each subpage identifies the channel by channel number and frequency and summarizes key details, as shown in the following examples.

```
---------------------------- Channel Configuration -----------------------------

The following sub-pages will display the Channel Map Details.
Select "s" to enter the sub-pages, "n" to proceed to the next page, or
"p" to proceed to the previous page.

----- Pg: 10.0   s<CR>:Pg 10.2   p<CR>:Pg 9.0   n<CR>:Pg 11.0   x<CR>:Exit -----
>>>
```

Type **s** and then press **Enter** to navigate to the first subpage, and so on to page through the entire channel lineup. The following screen (page 10.2) shows an example of a channel with no errors.

```
---------------------------- Channel Configuration -----------------------------

EIA Ch Num:        2
Status:            OK                  Program Num:        17
Source ID:         2144                Video PID:          0x1041
QAM Mode:          256                 Audio PID:          0x1042
QAM Frequency:     507000000           Second Audio PID:   0x1043
Carrier ID:        0                   CA PID:             0x104d

CA Status:         Ready
Late Key Status:   OK                  ECM Count:          16
Late Keys/24 hr:   0                   ECM Avg Proc Time:  9 ms

ECM Last 6 Error Reasons               ECM Error Count:    0



ECM LastError Time:N/A

----- Pg: 10.2   <CR>:Refresh   p<CR>:Pg 10.0   n<CR>:Pg 10.3   x<CR>:Exit -----
>>>
```

The following screen (page 10.8) shows an example of a channel with several errors. As shown in this example, this page displays the most recent six errors for the channel in question.

```
---------------------------- Channel Configuration -----------------------------

EIA Ch Num:        8
Status:            OK                  Program Num:        9
Source ID:         2136                Video PID:          0x0fc2
QAM Mode:          256                 Audio PID:          0x0fc1
QAM Frequency:     507000000           Second Audio PID:   0x0000
Carrier ID:        0                   CA PID:             0x0fcd

CA Status:         OK
Late Key Status:   N/A                 ECM Count:          11
Late Keys/24 hr:   N/A                 ECM Avg Proc Time:  4.862 ms


ECM Last 6 Error Reasons               ECM Error Count:    12
1                  Bad Length          2                   Bad Length
3                  Bad Length          4                   Bad Length
5                  Bad Length          6                   OK

ECM LastError Time:02-03-2010  15:56:54 UTC


----- Pg: 10.8   <CR>:Refresh   p<CR>:Pg 10.7   n<CR>:Pg 10.9   x<CR>:Exit -----
>>>
```

Field Descriptions

Field Name	Description
EIA Ch Num	Indicates the EIA output channel number - 2-78 and 95-99
Status	Displays one of the following values: ■ OK ■ Config Entry Invalid ■ Source ID Not Found ■ QAM Carrier Overflow ■ AUX Port Not Valid ■ Wideband Frequency Remap Error ■ Unknown QAM Mode ■ Duplicate Config Entry ■ PSI Error ■ Service Unavailable ■ QAM Demod Not Locked ■ Unknown Error ■ AUX Input Invalid ■ AUX Stream Lock Error ■ AUX Loss of Source ■ AUX Loss of Stream ■ Invalid Video Resolution ■ AUX Comm Error ■ Not Staged ■ Not Initialized ■ Not Authorized ■ CA Communication Error ■ Late Keys
Source ID	Source ID, a unique service on a given hub
QAM Mode	Displays 64, 256, or Invalid QAM Mode nnn
QAM Frequency	QAM frequency in Hz
Carrier ID	Maps to Demodulator Number or displays No QAM Demod Assigned
Program Num	Program number

Field Name	Description
Video PID	Video PID
Audio PID	Audio PID
Second Audio PID	Second Audio PID
CA PID	Conditional Access PID
CA Status	Displays one of the following values: OK, Not Staged, Not Initialized, Not Authorized, CA Comm Error, Channel Error, Other CA Error, CA Unknown Error
Late Key Status	Displays one of the following values: OK, Intermittent, or Late Key Error
Late Keys/24 hr	Number of late keys counted in the last 24 hours
ECM Count	Total ECM count
ECM Avg Proc Time	Average ECM processing time
ECM Last 6 Error Reasons	Listing of the most recent six ECM errors for the channel
ECM Error Count	Total count of ECM errors
ECM LastError Time	Day and time when the last error occurred

Basic Navigation

From each subpage, you can:

- Press **Enter** to redraw the screen and update its information.
- Type **p** and then press **Enter** to go to the Page 10.(x-1) diagnostic screen.
- Type **n** and then press **Enter** to go to the Page 10.(x+1) diagnostic screen.
- Type **x** and then press **Enter** to exit and return to the DSAN> prompt.
- At the **>>>** prompt, type any screen number in decimal format (e.g., 3.0) and then press **Enter** to go directly to that screen.

Viewing Auxiliary Input Status

The Auxiliary Input Status screen displays the current status and EIA channel assignment for up to eight channels on Auxiliary Ports 1 and 2.

```
-------------------------- Auxiliary Input Status --------------------------

Aux ID          Port            Type            EIA Ch          Status
  1              A1             DAXI                6           OK
  2              A1             DAXI               95           OK
  3              A1             DAXI               96           OK
  4              A1             DAXI               97           OK
  5              A2             DAXI               98           OK
  6              A2             DAXI               99           OK
  7              A2             DAXI               14           OK
  8              A2             DAXI               15           OK

PORT A1             OK
SW: 1.0.0.37        Temp: 25 deg C      Fan1: OK            Fan2: OK
Model: 2            Serial: AAJAHEB     Mfg Date: 03/01/11  TOS: 195 hours
Uptime:    5 days   7 hr  2 min 27 sec

PORT A2             OK
SW: 1.0.0.37        Temp: 25 deg C      Fan1: OK            Fan2: OK
Model: 2            Serial: ABHEAJH     Mfg Date: 12/01/10  TOS: 302 hours
Uptime:    0 days   3 hr  2 min 27 sec

--- Pg: 11.0   <CR>:Refresh   p<CR>:Pg 10.0   n<CR>:Pg 12.0   x<CR>:Exit ---
>>>
```

Field Descriptions

Field Name	Description
PORT A1	Indicates Aux Port 1 status (OK or gives other information regarding the port)
PORT A2	Indicates Aux Port 2 status (OK or gives other information regarding the port)
Aux In 1 - Aux In 8	Identifies 1 of 8 possible Aux channels
Port	Aux port assignment for the channel
Type	DAXI if the Cisco DAXI box is attached, or USER if another type of auxiliary box is attached
EIA Ch	EIA output channel assignment for the channel
Status	Displays one of the following values: OK, Loss of Source, Loss of Stream, Stream Lock Error, Comm Error, Unknown, Not Provisioned

Basic Navigation

From this screen, you can:

- Press **Enter** to redraw the screen and update its information.
- Type **p** and then press **Enter** to go to the Page 10.0 diagnostic screen.
- Type **n** and then press **Enter** to go to the Page 12.0 diagnostic screen.
- Type **x** and then press **Enter** to exit and return to the DSAN> prompt.
- At the **>>>** prompt, type any screen number decimal format (e.g., 3.0) and then press **Enter** to go directly to that screen.

Viewing Version Information

The Version Information screen displays the current DSAN system release version and related information, as shown in the example below.

```
----------------------------- Version Information ------------------------------

System Release Version:                1.1.52
Video Processor SW Version:            1.1.52
FPGA Version (main):                   006b (10/06/2011)
FPGA Version (cp):                     0007 (09/22/2009)
Bootloader Version:                    00.08
Hardware Revision:                     7.4
   Digital Board Rev:                  7
   RF Board Rev:                       4
Hardware ID:                           0654
Model Number:                          8200
Serial Number:                         DSBBBBBWK
Test Mode:                             Enabled

Software Download Status:              Success




----- Pg: 12.0   <CR>:Refresh   p<CR>:Pg 11.0   n<CR>:Pg 13.0   x<CR>:Exit -----
>>>
```

Field Descriptions

The names of the fields shown on this page are self-explanatory, with the following exceptions.

Test Mode displays one of the following values:

- Enabled
- Disabled

Software Download Status displays one of the following values:

- Success (last download successful)
- Unreachable
- Incomplete
- In Progress
- Invalid Image

Also, when the Software Download Status field displays In Progress, the following lines appear:

- Image Size: 25,100,200
- Downloaded: 10,500,600
- Written: 10,500,600

Basic Navigation

From this screen, you can:

- Press **Enter** to redraw the screen and update its information.
- Type **p** and then press **Enter** to go to the Page 11.0 diagnostic screen.
- Type **n** and then press **Enter** to go to the Page 13.0 diagnostic screen.
- Type **x** and then press **Enter** to exit and return to the DSAN> prompt.
- At the **>>>** prompt, type any screen number decimal format (e.g., 3.0) and then press **Enter** to go directly to that screen.

Viewing PowerKEY Information

The PowerKEY Information screen displays the current PowerKEY release number, status, and recent communications activity.

```
----------------------------- Powerkey Information -----------------------------

System Id:                                0xe00
PAK Status:                               Ready
Secure Micro Serial Number:               02:04:00:28:e2:20
PAK Version:                              01.00.02
Secure Micro Revision:                    C
Secure Micro Status:                      OK
Communication Status:                     Ready

Encrypted Channels:
   Provisioned:  63                        In Error:  9

EMM Process Status:                       OK
EMM Last Process Time:                    08-12-2010  16:54:05 UTC
EMM Last Received Time:                   08-12-2010  16:54:04 UTC




------------- Pg: 13.0   <CR>:Refresh   p<CR>:Pg 12.0   x<CR>:Exit -------------
>>>
```

Field Descriptions

Field Name	Description
System ID	Secure Micro system identifier
Status	Secure Micro status; displays one of the following values: Ready, Not Initialized, Not Authorized, Not Staged
Secure Micro Serial Number	Serial number set in the factory
PAK Version	Version of software that interacts with the Secure Micro
Communication Status	State of application and Secure Micro interaction
Encrypted Channels: Prov	Number of encrypted channels currently provisioned
Encrypted Channels: In Error	Number of currently provisioned encrypted channels that have errors
EMM Process Status	Current state of EMMs being processed; displays one of the following values: OK, In-Process, Pending
EMMs Processed/30 days	Total number of valid EMMs processed in the last 30 days
EMM Valid Count	Total number of valid EMMs processed since bootup
EMM Error Count	Number of EMMs with errors

Field Name	Description
EMM Last Error Time	Time stamp of the last EMM error
EMM Last Process Time	Time stamp of the last time that EMMs were processed
EMM Last Received Time	Time stamp of the last time that a burst of EMMs was received from the headend
EMMs Pending	Number of EMMs waiting to be processed

Basic Navigation

From this screen, you can:

- Press **Enter** to redraw the screen and update its information.
- Type **p** and then press **Enter** to go to the Page 12.0 diagnostic screen.
- Type **n** and then press **Enter** to go to the Page 14.0 diagnostic screen.
- Type **x** and then press **Enter** to exit and return to the DSAN> prompt.
- At the **>>>** prompt, type any screen number decimal format (e.g., 3.0) and then press **Enter** to go directly to that screen.

Viewing EAS Status

The EAS screen displays the current EAS event, if active, as well as a history of EAS events.

```
---------------------------------- EAS Status ----------------------------------

EAS Status:        Active              Event ID:           20176
Start Time:        03/26/12 18:49:51   Duration (secs):    120
Output Channel:    99                  Priority:           11
Source ID:         1295                Maj:Min Ch:         0:0

Exception Channels (SrcId:Maj:Min): 1286:0:0 1291:0:0 1701:0:0

-------------------------------EAS Event History--------------------------------
Status        ID    Priority  Start Time          Duration  SourceID  Major:Minor
Active        20176   11      03/26/12 18:49:51     120       1295      0 : 0
Complete      20175   11      03/26/12 18:43:28     120       1286      0 : 0
Complete      20174   11      03/26/12 18:43:19     120       1295      0 : 0





------------- Pg: 14.0   <CR>:Refresh   p<CR>:Pg 13.0   x<CR>:Exit -------------
>>>
```

Field Descriptions

Field Name	Description
EAS Status	Indicates whether an EAS event is active or inactive
Event ID	EAS Event ID number specified in the SCTE-18 message
Start Time	Event start time specified in the SCTE-18 message
Duration	Length of the EAS event in seconds specified in the SCTE-18 message
Output Channel	Actual force tune output channel corresponding to the source ID, or if the source ID is invalid, the default output channel
Priority	EAS priority specified in the SCTE-18 message
Source ID	Details channel source ID specified in the SCTE-18 message
Maj:Min Ch	Major and Minor channel numbers for the force tune details channel **Note:** This applies only to in-band EAS, which is not used in the DSAN 8200. These will report as 0.

Field Name	Description
Exception Channels	List of channels excluded from the force tune specified in the SCTE-18 message. These are in the form of: Source ID:Major Channel:Minor Channel **Note:** In the DSAN 8200, only Source ID is populated for out-of-band EAS messages. Major and minor channel numbers will report as 0.

Basic Navigation

From this screen, you can:

- Press **Enter** to redraw the screen and update its information.
- Type **p** and then press **Enter** to go to the Page 13.0 diagnostic screen.
- Type **n** and then press **Enter** to redraw the screen and update its information.
- Type **x** and then press **Enter** to exit and return to the DSAN> prompt.
- At the **>>>** prompt, type any screen number decimal format (e.g., 3.0) and then press **Enter** to go directly to that screen.

Troubleshooting

The following tables list problem conditions that are expected to occur most often, and for each condition, the diag screen field values that uniquely identify them.

Note: All field values shown below reflect bootup conditions following a power cycle. These results may differ from those obtained using dynamic reconfiguration.

Field Name	**No Error on Bootup**			**Error on Bootup**	
	No Config File Change	**Config File Change with Cache On**	**Config File Change with Cache Off**	**Config File Missing with Cache On**	**Config File Missing with Cache Off**
	Diag Page 1: DSAN Status				
Current Alarms	0	0	0	1	1
DOCSIS State	Connected - Idle	Connected - Idle	Connected - Idle	Config File Request Error	Config File Request Error
Provisioning State	Idle	Idle	Idle	Wait for Config	Wait for Config
Remap State	Channel Remapped	Channel Remapped	Channel Remapped	Remap Send	Waiting for Config SI
Tuner A	Locked or N/A *	Locked or N/A *	Locked or N/A *	Locked or N/A *	Locked or N/A *
Tuner B	Locked or N/A *	Locked or N/A *	Locked or N/A *	Locked or N/A *	Locked or N/A *
Tuner C	Locked or N/A *	Locked or N/A *	Locked or N/A *	Locked or N/A *	Locked or N/A *
Demods In Use	Expected Number (e.g. 16)	Expected Number (e.g. 16)	Expected Number (e.g. 16)	Expected Number (e.g. 16)	0
Demods Locked	Same as Demods in Use	Same as Demods in Use	Same as Demods in Use	Same as Demods in Use	0
Channels Provisioned	Expected Number (e.g. 82)	Expected Number (e.g. 82)	Expected Number (e.g. 82)	Expected Number (e.g. 82)	0
Channels Errors	0	0	0	0	0
	Diag Page 3: Alarm Status				
Alarm Description	-	-	-	Config File Retrieval Error	Config File Retrieval Error
	Diag Page 4: Network Status				
eMDTA IP Address	eMDTA Address	eMDTA Address	eMDTA Address	eMDTA Address	eMDTA Address
eCM (DOCSIS) IP Address	eCM Address	eCM Address	eCM Address	eCM Address	eCM Address
VCT ID (Hub ID)	Expected Hub ID (e.g. 0x0001)	Expected Hub ID (e.g. 0x0001)	Expected Hub ID (e.g. 0x0001)	Not Available	Not Available

Field Name	No Error on Bootup			Error on Bootup	
	No Config File Change	**Config File Change with Cache On**	**Config File Change with Cache Off**	**Config File Missing with Cache On**	**Config File Missing with Cache Off**
eCM State	Two Way	Two Way	Two Way	Two Way	Two Way
TFTP Server Name [an IP Address]	TFTP Address	TFTP Address	TFTP Address	TFTP Address	TFTP Address
Config File Name	Expected Name - "Loaded"	Expected Name - "Loaded"	Expected Name - "Loaded"	Old Config File Name - "Using Cached Copy"	Expected Name - "Not Loaded"

* N/A if not used.

Field Name	Error on Bootup				
Field Name	**Mandatory TLV Missing from Config File - Cache On**	**RF Input Disconnected from DSAN ****	**RF Tuner Jumper Disconnected inside DSAN**	**More than 3 RF Bands Defined in Config File**	**Invalid Source ID in Config File**
	Diag Page 1: DSAN Status				
Current Alarms	1	1	1	1	1
DOCSIS State	Connected - Idle	Waiting for Connection	Connected - Idle	Connected - Idle	Connected - Idle
Provisioning State	Wait for Config	Idle	Idle	Idle	Idle
Remap State	Channel Remapped	Channel Remapped	Channel Remapped	Channel Remapped	Channel Remapped
Tuner A	Locked or N/A *	Locked or N/A *	Locked or N/A *	Locked or N/A *	Locked or N/A *
Tuner B	Locked or N/A *	Locked or N/A *	Locked or N/A *	Locked or N/A *	Locked or N/A *
Tuner C	Locked or N/A *	Locked or N/A *	Locked or N/A *	Locked or N/A *	Locked or N/A *
Demods in Use	Expected Number (e.g. 16)	Expected Number (e.g. 16)	Expected Number (e.g. 16)	Expected Number (e.g. 16)	Expected Number (e.g. 16)
Demods Locked	Same as Demods in Use	0	Lower than Expected Number	Same as Demods in Use	Same as Demods in Use
Channels Provisioned	Expected Number (e.g. 82)	Expected Number (e.g. 82)	Expected Number (e.g. 82)	Expected Number (e.g. 82)	Expected Number (e.g. 82)
Channels Errors	0	Same as Channels Provisioned	Greater than 0	Greater than 0	Greater than 0
	DIAG Page 3: Alarm Status				
Alarm Description	Mandatory TLV is missing	QAM Lock Failed	QAM Lock Failed	Not all channels can be mapped by the three wideband tuners	Source ID not present in SI
	Diag Page 4: Network Status				
eMDTA IP Address	eMDTA Address	eMDTA Address	eMDTA Address	eMDTA Address	eMDTA Address

Field Name	Error on Bootup				
eCM (DOCSIS) IP Address	eCM Address	eCM Address	eCM Address	eCM Address	eCM Address
VCT ID (Hub ID)	Not Available	Expected Hub ID (e.g. 0x0001)	Expected Hub ID (e.g. 0x0001)	Expected Hub ID (e.g. 0x0001)	Expected Hub ID (e.g. 0x0001)
eCM State	Two Way	Lost Communication Scanning for DOCSIS Downstream Channel	Two Way	Two Way	Two Way
TFTP Server Name [an IP Address]	TFTP Address	TFTP Address	TFTP Address	TFTP Address	TFTP Address
Config File Name	Expected Name - "Loaded"	Expected Name - "Loaded"	Expected Name - "Loaded"	Expected Name - "Loaded"	Expected Name - "Loaded"
	Diag Page 5: Tuner Status				
Tuner Locked	"Locked" for all demodulators	"U" (Unlocked) for all demodulators	"U" (Unlocked) for a block of demodulators	"Locked" for all demodulators	"Locked" for all demodulators
	Diag Page 7: Demodulator Status				
Status	"Locked" for all demodulators	"Unlocked" for all demodulators	"Unlocked" for a block of demodulators	"Locked" for all demodulators	"Locked" for all demodulators
	Diag Page 9.x: Service Map Status				
Status	"OK" for all channels	"Error" for all channels	"Error" for one or more channels	"Error" for one or more channels	"Error" for one or more channels
	Diag page 10.x: Channel Configuration				
Status	"OK" for all channels	"QAM Demod Not Locked" for all channels	"QAM Demod Not Locked" for all channels in error	"Wideband Frequency Remap Error" for all channels in error	"Source ID Not Found" for all channels in error; QAM Mode field states "Invalid QAM Mode 0"

* N/A if not used.

** Error conditions will persist in CLI for several minutes after RF cable connection is restored.

	Error on Bootup
Field Name	**More than 16 QAMs Defined**
	Diag Page 1: DSAN Status
Current Alarms	1
DOCSIS State	Connected - Idle
Provisioning State	Idle
Remap State	Channel Remapped
Tuner A	Locked or N/A *

	Error on Bootup
Tuner B	Locked or N/A *
Tuner C	Locked or N/A *
Demods in Use	Expected Number (e.g. 16)
Demods Locked	Same as Demods in Use
Channels Provisioned	Expected Number (e.g. 82)
Channels Errors	Greater than 0
	Diag Page 3: Alarm Status
Alarm Description	Not all channels can be mapped by the three wideband tuners
	Diag Page 4: Network Status
eMDTA IP Address	eMDTA Address
eCM (DOCSIS) IP Address	eCM Address
VCT ID (Hub ID)	Expected Hub ID (e.g. 0x0001)
eCM State	Two Way
TFTP Server Name [an IP Address]	TFTP Address
Config File Name	Expected Name - "Loaded"
	Diag Page 5: Tuner Status
Tuner Locked	"Locked" for all demodulators
	Diag Page 7: Demodulator Status
Status	"Locked" for all demodulators
	Diag Page 9.x: Service Map Status
Status	"Error" for one or more channels
	Diag Page 10.x: Channel Configuration
Status	"QAM Carrier Overflow" for all channels in error

* N/A if not used.

6

SNMP Management

Introduction

This chapter provides information about using Simple Network Management Protocol (SNMP) commands for remote system monitoring and control. The system recognizes SNMP v1 and v2c commands, but only sends SNMP v1 traps to ensure backward compatibility.

In This Chapter

Introduction

Simple network management protocol (SNMP) is an ISO standard communication protocol often used by network and element management systems to monitor network devices for alarms and other significant conditions.

SNMP accesses information about network devices through management information base (MIB) objects. MIBs are hierarchical tree-structured descriptions used to define database elements. SNMP is used to manage individual data elements and the values assigned to MIB objects.

SNMP addresses a single MIB object using a numeric string called an object identifier (OID). The OID defines a branching path through the hierarchy to the location of the object. In addition to the OID, a MIB object is known by its object descriptor, a text string intended to be more meaningful to a human operator. The OID and object descriptor are unique to each MIB object.

Also defined for each MIB object is the access that SNMP can afford to the object data value. For example, if a MIB object has read-write access, SNMP can be used to both get (retrieve) and set (define or change) the value of the object. If an object is read-only, SNMP can be used to get the object value, but not to change it.

Proprietary DSAN MIB

The proprietary DSAN MIB allows easy access to DSAN hardware, software, alarm, and troubleshooting information. This information is grouped as follows:

- Manufacturing
- Administration
- Status
- Diagnostics
- Configuration
- Enhanced Channel Map
- Software image
- Wideband tuner
- Wideband receiver
- MPEG
- Alarms
- DTA
- Manual Configuration

Each group is represented by a table containing one or more MIB elements. Most MIB elements have names that identify their functions. The following sections provide details of the DSAN MIB elements by group.

Manufacturing Group

The Manufacturing group contains elements for reading the manufacturing serial number, model number, date code, time of service (TOS, or number of hours in operation), Secure Micro information, and DSAN board revision numbers.

saDsanMfgSerialNumber

The value in this object represents the manufacturing serial number of the unit.

Access: Read-only

Syntax: DisplayString

OID: 1.3.6.1.4.1.1429.1.10.2.1.1.1

saDsanMfgModel

The value in this object represents the model number of the unit.

Note: The model number for this product is 8200.

Access: Read-only

Syntax: DisplayString

OID: 1.3.6.1.4.1.1429.1.10.2.1.1.2

saDsanMfgDateCode

This object holds a string of three characters representing the manufacturing date of the unit. A letter specifying the month is followed by two digits indicating the year that the unit was built and tested.

The following letters are used to specify the month:

Letter	Month
A	January
B	February
C	March
D	April
E	May
F	June
G	July
H	August
J	September
K	October

Letter	Month
L	November
M	December

Example: J10 = September 2010

Access: Read-only

Syntax: DisplayString

OID: 1.3.6.1.4.1.1429.1.10.2.1.1.3

saDsanMfgTOS

The value in this object represents the time of service for the unit; that is, the number of hours it has been in operation.

Access: Read-only

Syntax: Integer32

OID: 1.3.6.1.4.1.1429.1.10.2.1.1.4

saDsanMfgSecMicroSystemID

The value in this object represents the PowerKEY Secure Micro system identification.

Access: Read-only

Syntax: DisplayString

OID: 1.3.6.1.4.1.1429.1.10.2.1.1.5.1

saDsanMfgSecMicroSerialNum

The value in this object represents the PowerKEY Secure Micro serial number.

Access: Read-only

Syntax: MACAddress

OID: 1.3.6.1.4.1.1429.1.10.2.1.1.5.2

saDsanMfgDigitalBoardRev

This object reports the revision number of the DSAN digital board.

Access: Read-only

Syntax: DisplayString

OID: 1.3.6.1.4.1.1429.1.10.2.1.1.6

saDsanMfgRfBoardRev

This object reports the revision number of the DSAN RF board.

Access: Read-only

Syntax: DisplayString

OID: 1.3.6.1.4.1.1429.1.10.2.1.1.7

Administration Group

Use the elements in the Administration group to perform a variety of DSAN administrative tasks involving hardware, software configuration, and communication with the network management system.

saDsanAdminReset

The reset value will trigger a reset. The reconfiguration will trigger an application state machine reset, which will reconfigure DSAN by getting a new configuration file.

The following values can be used for a write operation:

- 1 (normal) - The value returned for a "get" performed on this OID.
- 2 (eHostReset) - The eHost entity will be reset. This will consist of a reconfiguration of the eHost, but not a reset of the eCM.
- 3 (sysreset) - The eCM and eHost will be completely reset.

Access: Read-write

Syntax: Integer

OID: 1.3.6.1.4.1.1429.1.10.2.1.2.1

saDsanAdminSession

The value normal (1) will be reported by default. The values killLocalSessions (2) and killRemoteSessions (3) will terminate all such sessions.

Access: Read-write

Syntax: Integer

OID: 1.3.6.1.4.1.1429.1.10.2.1.2.2

saDsanAdminConfigFileOnBoot

The possible values for this object are useStoredMap (1) and waitForMap (2). This configuration will be used during the boot-up stage. The default is useStoredMap.

Access: Read-write

Syntax: Integer

OID: 1.3.6.1.4.1.1429.1.10.2.1.2.4

saDsanAdminEmmAlarmNumberOfDays

This object defines the number of days that elapse before the DSAN sends a trap warning that an entitlement management message (EMM) is due.

EMMs authorize specific cable services for a particular DSAN. On a cyclical basis (every 10 days, for example), new EMMs are sent from the headend to DSAN. If the cycle lapses without receiving an EMM, the customer should receive a trap warning that it has been a full cycle since the last EMM was processed. This object allows the customer to set the duration of the cycle in days that triggers an EMM alarm trap. The range of possible values is 1 to 60; the default value is 10.

Access: Read-write

Syntax: Integer

OID: 1.3.6.1.4.1.1429.1.10.2.1.2.9

Event Log

The event log contains information about devices on the host. Use the elements described in this section to specify the IP address, path, and name of the event log file and to upload, clear, or query the status of the event log.

saDsanEventLogIpAddress

This object specifies the IP address of the destination machine to which you will upload the event log. The address format is xxx.xxx.xxx.xxx, where the value of each element (xxx) in the address ranges from 0 to 255.

Access: Read-write

Syntax: IpAddress

OID: 1.3.6.1.4.1.1429.1.10.2.1.2.6.1

saDsanEventLogPath

This object defines the path to the event log file within the file structure of the device specified by the event log IP address. The event log path string can be up to 127 characters in length. By default, an empty string implies a path of /var/tftpboot.

Access: Read-write

Syntax: DisplayString

OID: 1.3.6.1.4.1.1429.1.10.2.1.2.6.2

saDsanEventLogFilename

This object identifies the name of the event log file. The event log file name can be up to 63 characters in length, and must conform to standard naming conventions for the operating system of the TFTP server.

Access: Read-write

Syntax: DisplayString

OID: 1.3.6.1.4.1.1429.1.10.2.1.2.6.3

saDsanEventLogUpload

This object initiates an upload of the event log file. Possible values are normal (1) and trigger (2).

Access: Read-write

Syntax: Integer

OID: 1.3.6.1.4.1.1429.1.10.2.1.2.6.4

saDsanEventLogClear

This object clears the event log. Possible values are normal (1) and trigger (2).

Access: Read-write

Syntax: Integer

OID: 1.3.6.1.4.1.1429.1.10.2.1.2.6.5

saDsanEventLogLastUploadStatus

The value in this object indicates the current status of the current or most recent event log file transfer operation.

Possible values for this object are:

- idle (1)
- inProgress (2)
- success (3)
- failed (4)

Access: Read-only

Syntax: Integer

OID: 1.3.6.1.4.1.1429.1.10.2.1.2.6.6

Event Log Level Table

Use the Event Log Level table to define one of three levels of detail for each category of information (event or alarm) written to the DSAN event log.

You can choose one of the following levels for each category of information:

- Terse - Only enough information to uniquely identify the event or alarm
- Verbose - More detailed information to better describe the event or alarm
- Debug - As much information as is available regarding the event or alarm

Note: For more information about the DSAN event log, see ***Event Log*** (on page 185).

saDsanEventLogLevelEntry

Row of table, indexed by the entry number.

Access: N/A

Syntax: Integer

OID: 1.3.6.1.4.1.1429.1.10.2.1.2.6.7.1

saDsanEventLogLevelCategoryIndex

Event Log Level table index; sequential entry number.

Access: Read-only

Syntax: Integer

OID: 1.3.6.1.4.1.1429.1.10.2.1.2.6.7.1.1

saDsanEventLogLevelCategory

This object identifies the DSAN feature category that is affected by the Event Log Level assignment.

Access: Read-only

Syntax: DisplayString

OID: 1.3.6.1.4.1.1429.1.10.2.1.2.6.7.1.2

saDsanEventLogLevel

This object initiates the level of information written to the event log.

Possible values for this object are:

- terse (1)
- verbose (2)
- debug (3)

The default logging level is terse (1).

Access: Read-write

Syntax: Integer

OID: 1.3.6.1.4.1.1429.1.10.2.1.2.6.7.1.3

SNMP Manager Table

Use the SNMP Manager table to enable traps to be sent to the IP addresses of up to three different receivers or targets. The index into the table represents one of three rows, designated 0 through 2.

Complete the following steps to receive traps.

1. Set **saDsanSnmpMgrEnable** to enable (2).
2. Set **saDsanSnmpMgrIP** (in xxx.xxx.xxx.xxx format) to the IP address of the remote entity to receive traps.
3. Set **saDsanSnmpMgrTrapPort** to a valid available port.

The objects used in each of these steps are described below along with other related objects.

saDsanSnmpMgrCount

This object holds the number of SNMP Manager IP addresses that are allowed to be set at one time. A get on this object always returns the value 3.

Access: Read-only

Syntax: Integer

OID: 1.3.6.1.4.1.1429.1.10.2.1.2.7.1

saDsanSnmpMgrEntry

This object holds a unique value that indicates the row of the SNMP Manager table in which the corresponding entry is stored. Its value ranges from 1 to 3 (the value of admSnmpMgrCount).

Access: N/A

Syntax: Integer

OID: 1.3.6.1.4.1.1429.1.10.2.1.2.7.2.1

saDsanSnmpMgrIndex

This object holds a unique value for each SNMP Manager IP address entry. Its value ranges from 1 to 3 (the value of admSnmpMgrCount).

Access: N/A

Syntax: Integer

OID: 1.3.6.1.4.1.1429.1.10.2.1.2.7.2.1.1

saDsanSnmpMgrIP

This object holds the SNMP manager IP address. Once this is set, the traps are sent to all specified IP addresses.

Access: Read-write

Syntax: IpAddress

OID: 1.3.6.1.4.1.1429.1.10.2.1.2.7.2.1.2

saDsanSnmpMgrEnable

The value in this object specifies whether the corresponding SNMP Manager entry is enabled or disabled. Possible values are disable (1) and enable (2).

Access: Read-write

Syntax: Integer

OID: 1.3.6.1.4.1.1429.1.10.2.1.2.7.2.1.3

saDsanSnmpMgrTrapPort

This object specifies the port used for the traps. Its value ranges from 0 to 255. The default value is 162.

Access: Read-write

Syntax: Integer

OID: 1.3.6.1.4.1.1429.1.10.2.1.2.7.2.1.4

User Configuration

The user configuration objects are not supported in the DSAN 8200. They are included here for reference only.

saDsanAdminUserConfigStatus

This object is not supported in the DSAN 8200.

OID: 1.3.6.1.4.1.1429.1.10.2.1.2.10.1

saDsanAdminUcEasOutputEiaCh

This object is not supported in the DSAN 8200.

OID: 1.3.6.1.4.1.1429.1.10.2.1.2.10.2

saDsanAdminUcEasPriority

This object is not supported in the DSAN 8200.

OID: 1.3.6.1.4.1.1429.1.10.2.1.2.10.3

saDsanAdminUcScte127OutputEiaCh

This object is not supported in the DSAN 8200.

OID: 1.3.6.1.4.1.1429.1.10.2.1.2.10.4

saDsanAdminUcTelnet

This object is not supported in the DSAN 8200.

OID: 1.3.6.1.4.1.1429.1.10.2.1.2.10.5

saDsanAdminUcCraft

This object is not supported in the DSAN 8200.

OID: 1.3.6.1.4.1.1429.1.10.2.1.2.10.6

User Config Aux Table

The User Config Aux Table objects are not supported in the DSAN 8200. They are included here for reference only.

saDsanAdminUcAuxEntry

This object is not supported in the DSAN 8200.

OID: 1.3.6.1.4.1.1429.1.10.2.1.2.10.7.1

saDsanAdminUcAuxIndex

This object is not supported in the DSAN 8200.

OID: 1.3.6.1.4.1.1429.1.10.2.1.2.10.7.1.1

saDsanAdminUcAuxInput

This object is not supported in the DSAN 8200.

OID: 1.3.6.1.4.1.1429.1.10.2.1.2.10.7.1.2

saDsanAdminUcAuxOutputChannel

This object is not supported in the DSAN 8200.

OID: 1.3.6.1.4.1.1429.1.10.2.1.2.10.7.1.3

Status Group

Use the objects in the Status group to view the state of various DSAN operating parameters. The name of each object in this table identifies the parameter it reports.

saDsanStatusLastReset

The value in this object indicates the status of the last reset of the DSAN system.

Possible values are:

- unknown (1)
- eHostReset (2)
- sysreset (3)

Access: Read-only

Syntax: Integer

OID: 1.3.6.1.4.1.1429.1.10.2.1.3.1

saDsanStatusRebootReason

This object specifies the reason for the system reboot.

Access: Read-only

Syntax: DisplayString

OID: 1.3.6.1.4.1.1429.1.10.2.1.3.2

saDsanStatusDocsisState

This object reports the current state of the DOCSIS state machine.

Possible values are listed below with their descriptions.

Value	Description
1	initialState
2	performRegistration
3	waitforOOBtunnels
4	performLaunchParserThreads
5	launchParserThreadsError
6	registrationInProgress
7	registered
8	registrationError

Value	Description
9	waitForSiTime
10	performDhcpRequest
11	DhcpRequestError
12	performConfigFileRequest
13	configFileRequestError
14	connectivityLost
15	waitingForConnectivity
16	connectionFound
17	connectedIdle

Access: Read-only

Syntax: Integer

OID: 1.3.6.1.4.1.1429.1.10.2.1.3.3

saDsanStatusProvisioningState

This object reports the current state of the Provisioning state machine.

Possible values are listed below along with their descriptions.

Value	Description
0	unknownState
1	initDState
2	checkForCache
3	waitForConfigState
4	processConfigState
5	setupSiState
6	processSiState
7	waitForSiState
8	configFileError
9	idleState
10	sendConfigSiFile
11	setupDtaState
12	waitForDtaSiState
13	processDtaSiState

Access: Read-only

Syntax: Integer

OID: 1.3.6.1.4.1.1429.1.10.2.1.3.4

saDsanStatusTemperature

This object reports the current DSAN temperature in degrees Celsius.

Access: Read-only

Syntax: String Units deg C

OID: 1.3.6.1.4.1.1429.1.10.2.1.3.6

saDsanStatusTamper

This object reports the current status of the DSAN tamper switch.

Access: Read-only

Syntax: Integer

OID: 1.3.6.1.4.1.1429.1.10.2.1.3.7

saDsanStatusTsr

This object reports the time interval since the last DSAN reset.

Access: Read-only

Syntax: Seconds

OID: 1.3.6.1.4.1.1429.1.10.2.1.3.8

saDsanStatusClock

This object reports the current clock time on the node.

Access: Read-only

Syntax: DisplayString

OID: 1.3.6.1.4.1.1429.1.10.2.1.3.9

saDsanStatusPowerKeyPak

This object reports the current PAK system status.

Possible values are:

- unknown (1)
- notStaged (2)
- notInitialized (3)

- ready (4)
- commError (5)

Access: Read-only

Syntax: Integer

OID: 1.3.6.1.4.1.1429.1.10.2.1.3.12.1

saDsanStatusPowerKeyPal

This object reports the current PAL system status.

Possible values are:

- unknown (1)
- ready (2)
- waitingForDemodConfig (3)
- ecmDriverFailed (4)
- pakNotStaged (5)
- pakFailed (6)
- unknownError (7)
- commError (8)

Access: Read-only

Syntax: Integer

OID: 1.3.6.1.4.1.1429.1.10.2.1.3.12.2

Aux Table

Use the objects in the Aux table to view the Auxiliary port configuration parameters and status. The name of each object in the table identifies the parameter it reports.

saDsanAuxEntry

Row of table, indexed by the entry number.

Access: N/A

Syntax: Integer

OID: 1.3.6.1.4.1.1429.1.10.2.1.3.10.1

saDsanAuxIndex

Index used for displaying the table.

Access: N/A

Syntax: Integer

OID: 1.3.6.1.4.1.1429.1.10.2.1.3.10.1.1

saDsanAuxInput

This object shows the port number of the configured auxiliary port.

Possible values are:

- 1 through 4 from ASI port 1
- 5 through 8 from ASI port 2

Access: N/A

Syntax: Integer

OID: 1.3.6.1.4.1.1429.1.10.2.1.3.10.1.2

saDsanAuxCarrierIndex

This object shows the QAM index of the configured auxiliary port.

The values are 31 for ASI port 1 and 30 for ASI port 2.

Access: Read-only

Syntax: Integer

OID: 1.3.6.1.4.1.1429.1.10.2.1.3.10.1.3

saDsanAuxVideoPid

This object shows the video PID associated with the configured auxiliary port.

Possible values are:

- 120 for index 1 and 5
- 220 for index 2 and 6
- 320 for index 3 and 7
- 420 for index 4 and 8

Access: Read-only

Syntax: Integer

OID: 1.3.6.1.4.1.1429.1.10.2.1.3.10.1.4

saDsanAuxAudioPid

This object shows the audio PID associated with the configured auxiliary port.

Possible values are:

- 140 for index 1 and 5
- 240 for index 2 and 6
- 340 for index 3 and 7
- 440 for index 4 and 8

Access: Read-only

Syntax: Integer

OID: 1.3.6.1.4.1.1429.1.10.2.1.3.10.1.5

saDsanAuxStatus

This object shows the current status of the configured auxiliary port.

Possible values are:

- present (1)
- lossOfSource (2)
- portLossOfStream (3)
- portStreamLockError (4)
- auxCommunicationError (5)
- unknown (6)
- notProvisioned (7)

Access: Read-only

Syntax: Integer

OID: 1.3.6.1.4.1.1429.1.10.2.1.3.10.1.6

Session Table

Use the Session table to examine session information for the users currently logged into the unit. The name of each object in the table identifies the parameter it reports.

saDsanSessionEntry

Row of table, indexed by the entry number.

Access: N/A

Syntax: Integer

OID: 1.3.6.1.4.1.1429.1.10.2.1.3.11.1

saDsanSessionIndex

Sequential entry number.

Access: N/A

Syntax: Integer

OID: 1.3.6.1.4.1.1429.1.10.2.1.3.11.1.1

saDsanSessionLoginId

This object shows the login name of the opened session.

Access: Read-only

Syntax: DisplayString

OID: 1.3.6.1.4.1.1429.1.10.2.1.3.11.1.2

saDsanSessionType

This object shows the session type for the opened session. Possible values are local (1) and remote (2).

Access: Read-only

Syntax: Integer

OID: 1.3.6.1.4.1.1429.1.10.2.1.3.11.1.3

saDsanSessionTimestamp

This object shows the date and time that the session was opened.

Access: Read-only

Syntax: DateAndTime

OID: 1.3.6.1.4.1.1429.1.10.2.1.3.11.1.4

DAXI Box Table

Use the objects in the DAXI Box table to view the status and functions of up to two attached DAXI boxes. The name of each object in the table identifies the parameter it reports.

saDsanDaxiBoxEntry

Row of table, indexed by the entry number.

Access: N/A

Syntax: Integer

OID: 1.3.6.1.4.1.1429.1.10.2.1.3.13.1

saDsanDaxiBoxIndex

Index used for displaying the table.

Access: N/A

Syntax: Integer

OID: 1.3.6.1.4.1.1429.1.10.2.1.3.13.1.1

saDsanDaxiBoxPort

This object identifies the DAXI by its associated DSAN Aux port number.

- The value 1 represents the DAXI Box connected to DSAN port 1.
- The value 2 represents the DAXI Box connected to DSAN port 2.

Access: Read-only

Syntax: Integer

OID: 1.3.6.1.4.1.1429.1.10.2.1.3.13.1.2

saDsanDaxiBoxTemp

This object indicates the temperature of the DAXI box in degrees Celsius.

Access: Read-only

Syntax: Integer

OID: 1.3.6.1.4.1.1429.1.10.2.1.3.13.1.3

saDsanDaxiBoxFan1

This object indicates the operational status of the first of two fans in the DAXI box. Possible values are unknown (1), ok (2), and fault (3).

Access: Read-only

Syntax: Integer

OID: 1.3.6.1.4.1.1429.1.10.2.1.3.13.1.4

saDsanDaxiBoxFan2

This object indicates the operational status of the second of two fans in the DAXI box. Possible values are unknown (1), ok (2), and fault (3).

Access: Read-only

Syntax: Integer

OID: 1.3.6.1.4.1.1429.1.10.2.1.3.13.1.5

saDsanDaxiBoxUptime

This object gives the time in seconds that the DAXI box has been operating since the last reset.

Access: Read-only

Syntax: Integer

OID: 1.3.6.1.4.1.1429.1.10.2.1.3.13.16

saDsanDaxiBoxTOS

This object gives the time in hours that the DAXI box has been operating since manufacture.

Access: Read-only

Syntax: Integer

OID: 1.3.6.1.4.1.1429.1.10.2.1.3.13.1.7

saDsanDaxiBoxSWver

This object shows the version number of the software installed in the DAXI box.

Access: Read-only

Syntax: DisplayString

OID: 1.3.6.1.4.1.1429.1.10.2.1.3.13.1.8

saDsanDaxiBoxModelNum

This object indicates the model number of the DAXI box.

Access: Read-only

Syntax: Integer

OID: 1.3.6.1.4.1.1429.1.10.2.1.3.13.1.9

saDsanDaxiBoxSerialNum

This object indicates the model number of the DAXI box.

Access: Read-only

Syntax: DisplayString

OID: 1.3.6.1.4.1.1429.1.10.2.1.3.13.1.10

saDsanDaxiBoxDateCode

This object indicates the manufacture date of the DAXI box.

Access: Read-only

Syntax: DateAndTime

OID: 1.3.6.1.4.1.1429.1.10.2.1.3.13.1.11

Other Status Objects

The DSAN 8200 supports the following additional Status objects.

saDsanStatusTestMode

This object indicates wither DSAN Test Mode has been disabled via the configuration file. The possible values for this object are enabled (1) and disabled (2).

Access: Read-only

Syntax: Integer

OID: 1.3.6.1.4.1.1429.1.10.2.1.3.14

saDsanStatusStatusWinkSwitch

This object reports the current state of the wink switch. Possible values are:

- reverseWinkLow (1) - causes no loss (0 dB) on the reverse RF path
- reverseWinkPad (2) - attenuates the reverse RF path by -6 dB
- reverseWinkOff (3) - turns off the reverse RF path

Access: Read-only

Syntax: Integer

OID: 1.3.6.1.4.1.1429.1.10.2.1.3.15

Diagnostic Group

The Diagnostic group includes subgroups that contain information about the DSAN that can be useful in monitoring and troubleshooting the unit. These information subgroups include the following:

- EHost - information about the embedded set-top box, a virtual device used in network communication and DSAN provisioning
- eCM - information about the embedded cable modem, a physical device used in DOCSIS communication
- CPU - information about the internal microprocessor host device
- Mem - information about internal host memory
- PowerKEY - information about DSAN PowerKEY setup and Channel Statistics
- DAVIC - information about DAVIC communication (not applicable to the DSAN 8200)

The elements used to access each information subgroup are described below.

EHost

This subgroup contains information about the DSAN embedded virtual set-top box. The name of each object in the subgroup identifies the parameter it reports.

saDsanEHostInterfaceMAC

This object holds the MAC address for the embedded DSAN object. The value of the object is expressed as xxx.xxx.xxx.xxx, where each xxx element is a value in the range 0 to 255.

Access: Read-only

Syntax: MAC Address

OID: 1.3.6.1.4.1.1429.1.10.2.1.4.1.1

saDsanEHostInterfaceIPAddress

This object holds the assigned IP address for the embedded DSAN object. The value of the object is expressed as xxx.xxx.xxx.xxx, where each xxx element is a value in the range 0 to 255.

Access: Read-only

Syntax: IpAddress

OID: 1.3.6.1.4.1.1429.1.10.2.1.4.1.2

saDsanEHostInterfaceLeaseExpiration

The value in this object represents the date and time of the expiration of the DHCP lease, expressed in time stamp format.

Access: Read-only

Syntax: Integer

OID: 1.3.6.1.4.1.1429.1.10.2.1.4.1.3

eCM

This subgroup contains information about the DSAN embedded cable modem. The name of each object in the subgroup identifies the parameter it reports.

saDsanEcmInterfaceMAC

This object holds the MAC address for the embedded DSAN cable modem. The value of the object is expressed as ##:##:##:##:##:##, where each ## element is a value in the range 0 to FF.

Access: Read-only

Syntax: MAC Address

OID: 1.3.6.1.4.1.1429.1.10.2.1.4.2.1

saDsanEcmInterfaceIPAddress

This object holds the IP address for the embedded cable modem in the DSAN. The value of the object is xxx.xxx.xxx.xxx, where each element (xxx) ranges from 0 to 255.

Access: Read-only

Syntax: IpAddress

OID: 1.3.6.1.4.1.1429.1.10.2.1.4.2.2

CPU

This subgroup contains information about the DSAN internal microprocessor. The name of each object in the subgroup identifies the parameter it reports.

saDsanCpuUsage

This object reports current DSAN CPU usage as a percentage of utilization. Possible values range from 0 to 100.

Access: Read-only

Syntax: Integer

OID: 1.3.6.1.4.1.1429.1.10.2.1.4.3.1

saDsanCpuIdleTime

This object reports the DSAN CPU idle time as a percentage of no utilization. Possible values range from 0 to 100.

Access: Read-only

Syntax: Integer

OID: 1.3.6.1.4.1.1429.1.10.2.1.4.3.2

MEM

This subgroup contains information about DSAN internal memory. The name of each object in the subgroup identifies the parameter it reports.

saDsanMemTotalMemory

This object reports the total memory installed in the DSAN in kilobytes. Possible values range from 0 to 237884.

Access: Read-only

Syntax: Integer

OID: 1.3.6.1.4.1.1429.1.10.2.1.4.4.1

saDsanMemFreeMemory

This object reports the current total unused memory in the DSAN in kilobytes. Possible values range from 0 to 237884.

Access: Read-only

Syntax: Integer

OID: 1.3.6.1.4.1.1429.1.10.2.1.4.4.2

PowerKEY

This subgroup contains information about the DSAN PowerKEY setup.

saDsanPowerKeyLastReceivedTime

This object reports the time that the last burst of EMMs was received from the headend.

Access: Read-only

Syntax: DateAndTime

OID: 1.3.6.1.4.1.1429.1.10.2.1.4.5.6

PowerKEY Channel Statistics Table

Use the objects in the PowerKEY Channel Statistics table to view the statistics gathered for each PowerKEY encrypted channel. The name of each object in the table identifies the parameter it reports.

saDsanPowerKeyStatsEntry

Row of table, indexed by the entry number.

Access: N/A

Syntax: Integer

OID: 1.3.6.1.4.1.1429.1.10.2.1.4.5.8.1

saDsanPowerKeyChannelIndex

Index used for displaying the table. Each index identifies a possible PowerKEY encrypted channel. Possible index values are 1 to 82.

Access: N/A

Syntax: Integer

OID: 1.3.6.1.4.1.1429.1.10.2.1.4.5.8.1.1

saDsanPowerKeyDemodIndex

This object identifies the demodulator assignment for the channel. Possible values are -1 to 31, where:

- -1 is undefined
- 1-15 are for normal channels
- 16-18 are for EAS channels

Access: Read-only

Syntax: Integer

OID: 1.3.6.1.4.1.1429.1.10.2.1.4.5.8.1.2

saDsanPowerKeyCaPid

This object shows the conditional access packet identifier (CA PID) for the channel.

Access: Read-only

Syntax: Integer

OID: 1.3.6.1.4.1.1429.1.10.2.1.4.5.8.1.3

saDsanPowerKeyChannelEia

This object identifies the EIA output channel number assignment for the channel.

Access: Read-only

Syntax: Integer

OID: 1.3.6.1.4.1.1429.1.10.2.1.4.5.8.1.4

saDsanPowerKeyEcmCount

This object reports the total number of entitlement control messages (ECMs) processed for the channel. ECMs are the messages used to decrypt a particular service.

Access: Read-only

Syntax: Integer

OID: 1.3.6.1.4.1.1429.1.10.2.1.4.5.8.1.5

saDsanPowerKeyEcmErrorCount

This object reports the total number of ECMs for the channel that have failed.

Access: Read-only

Syntax: Integer

OID: 1.3.6.1.4.1.1429.1.10.2.1.4.5.8.1.6

saDsanPowerKeyEcmErrorReason

This object reports the reason for the most recent ECM failure for the channel.

Possible values are:

- noError (1)
- notAuthorized (2)
- notStaged (3)
- badDemodIndex (4)
- badCaPid (5)
- badLength (6)
- nullPointer (7)
- timeOut (8)
- fpgaProcessingError (9)
- unknownError (10)

Access: Read-only

Syntax: Integer

OID: 1.3.6.1.4.1.1429.1.10.2.1.4.5.8.1.7

saDsanPowerKeyEcmErrorTime

This object reports the time that the most recent ECM error for the channel occurred.

Access: Read-only

Syntax: DateAndTime

OID: 1.3.6.1.4.1.1429.1.10.2.1.4.5.8.1.8

saDsanPowerKeyEcmAveProcTime

This object reports the average time in microseconds that it takes to process one ECM for the channel.

Access: Read-only

Syntax: Integer

OID: 1.3.6.1.4.1.1429.1.10.2.1.4.5.8.1.9

saDsanPowerKeyLateKeys

This object reports the number of times that a program key decryption operation occurred long enough after the program data arrived at the DSAN to possibly cause macroblocking or other image artifacts.

Access: Read-only

Syntax: Integer

OID: 1.3.6.1.4.1.1429.1.10.2.1.4.5.8.1.10

DAVIC Information

The DAVIC Information Group and its corresponding objects are not supported in the DSAN 8200. They are included here for reference only.

saDsanDavicHostType

This object is not supported in the DSAN 8200.

OID: 1.3.6.1.4.1.1429.1.10.2.1.4.6.1

saDsanDavicVersion

This object is not supported in the DSAN 8200.

OID: 1.3.6.1.4.1.1429.1.10.2.1.4.6.2

saDsanRx

This object is not supported in the DSAN 8200.

OID: 1.3.6.1.4.1.1429.1.10.2.1.4.6.3

saDsanRxFrequency

This object is not supported in the DSAN 8200.

OID: 1.3.6.1.4.1.1429.1.10.2.1.4.6.3.1

saDsanRxChannelWidth

This object is not supported in the DSAN 8200.

OID: 1.3.6.1.4.1.1429.1.10.2.1.4.6.3.2

saDsanRxPowerLevel

This object is not supported in the DSAN 8200.

OID: 1.3.6.1.4.1.1429.1.10.2.1.4.6.3.3

saDsanRxDataRate

This object is not supported in the DSAN 8200.

OID: 1.3.6.1.4.1.1429.1.10.2.1.4.6.3.4

saDsanRxSnr

This object is not supported in the DSAN 8200.

OID: 1.3.6.1.4.1.1429.1.10.2.1.4.6.3.5

saDsanRxTotalCounter

This object is not supported in the DSAN 8200.

OID: 1.3.6.1.4.1.1429.1.10.2.1.4.6.3.6

saDsanRxRsCorrErrorCount

This object is not supported in the DSAN 8200.

OID: 1.3.6.1.4.1.1429.1.10.2.1.4.6.3.7

saDsanRxRsUnCorrErrorCount

This object is not supported in the DSAN 8200.

OID: 1.3.6.1.4.1.1429.1.10.2.1.4.6.3.8

saDsanRxStatus

This object is not supported in the DSAN 8200.

OID: 1.3.6.1.4.1.1429.1.10.2.1.4.6.3.9

Configuration Group

The Configuration group includes two tables. The Configuration File table contains information about the DSAN configuration file. The Master Configuration table contains information about each channel assignment in the lineup.

Configuration File Table

The Configuration File table contains information about the DSAN configuration file. The name of each object in the table identifies the parameter it reports.

saDsanConfigFileHash

This object holds the calculated hash value of the last configuration file that was loaded. Each hash is a string of 40 characters used to verify proper transmission of the file.

Access: Read-only

Syntax: DisplayString

OID: 1.3.6.1.4.1.1429.1.10.2.1.5.1.1

saDsanConfigFileRevision

This object holds the revision number of the last configuration file to be loaded. The revision number is an integer that is incremented to signify a change in the configuration file format.

Access: Read-only

Syntax: Integer

OID: 1.3.6.1.4.1.1429.1.10.2.1.5.1.2

saDsanConfigFileName

This object holds the complete name of the configuration file, including the MAC address from the DHCP server.

The naming format is not enforced. One example of a file naming scheme is "DSAN_aabbccddeeff.cfg," where aabbccddeeff is the MAC address of the DSAN unit expressed in hexadecimal.

Access: Read-only

Syntax: DisplayString

OID: 1.3.6.1.4.1.1429.1.10.2.1.5.1.3

saDsanConfigScte127SourceId

This object is not supported in the DSAN 8200.

OID: 1.3.6.1.4.1.1429.1.10.2.1.5.1.4

saDsanConfigFileAuxChannelEasAction

This object defines the action taken with respect to the Aux channel emergency alert system (EAS) configuration. Possible values are force (1) and ignore (2).

Access: Read-write

Syntax: Integer

OID: 1.3.6.1.4.1.1429.1.10.2.1.5.1.5

saDsanConfigFileVctId

This object holds the virtual channel table (VCT) ID. The format is a positive integer.

Access: Read-only

Syntax: Integer

OID: 1.3.6.1.4.1.1429.1.10.2.1.5.1.6

Master Configuration Table

Use the objects in the Master Configuration table to read DSAN configuration information.

saDsanMasterConfigEntry

Row of table, indexed by the entry number.

Access: N/A

Syntax: Integer

OID: 1.3.6.1.4.1.1429.1.10.2.1.5.2.1

saDsanConfigChannelIndex

This object holds the channel number. Possible values are in the range 1 to 82.

Access: N/A

Syntax: Integer

OID: 1.3.6.1.4.1.1429.1.10.2.1.5.2.1.1

saDsanConfigTunerAssignment

This object reports the tuner assigned to the channel.

Possible values are:

- bandA (1)
- bandB (2)
- bandC (3)

Access: Read-only

Syntax: Integer

OID: 1.3.6.1.4.1.1429.1.10.2.1.5.2.1.2

saDsanConfigEasChannelState

This object reports the EAS current or last provisioned state.

Possible values are:

- forceTune (1)
- exception (2)
- unknown (3)

Access: Read-only

Syntax: Integer

OID: 1.3.6.1.4.1.1429.1.10.2.1.5.2.1.3

saDsanConfigChannelType

This object identifies the channel as either a QAM or an auxiliary channel.

Possible values are:

- auxChannel (1)
- qamChannel (2)
- pkeyChannel (3)
- dtaChannel (4)
- ccardChannel (5)

Access: Read-only

Syntax: Integer

OID: 1.3.6.1.4.1.1429.1.10.2.1.5.2.1.4

saDsanConfigSourceId

This object identifies the source for the channel. The format is a positive integer.

Access: Read-only

Syntax: Integer

OID: 1.3.6.1.4.1.1429.1.10.2.1.5.2.1.5

saDsanConfigQamFrequency

This object reports the frequency assignment for the QAM channel in Hz.

Access: Read-only

Syntax: Integer

OID: 1.3.6.1.4.1.1429.1.10.2.1.5.2.1.6

saDsanConfigQamModulation

This object reports the modulation scheme used by the channel.

Possible values are:

- notApplicable (1) - no modulation
- q64 (2) - 64 QAM
- q256 (3) - 256 QAM

Access: Read-only

Syntax: Integer

OID: 1.3.6.1.4.1.1429.1.10.2.1.5.2.1.7

saDsanConfigDemodIndex

This object reports the demodulation index for the channel. The aux channels do not have demodulation indices. However, 30-31 indicate aux channels in this table.

Possible values are:

- -1 (undefined)
- 0-15 for normal channels
- 16-18 for EAS
- 30-31 for aux channels

Access: Read-only

Syntax: Integer

OID: 1.3.6.1.4.1.1429.1.10.2.1.5.2.1.8

saDsanConfigProgramNumber

This object reports the program number assigned to the multi-program transport stream (MPTS) stream for a particular QAM in positive integer format.

Access: Read-only

Syntax: Integer

OID: 1.3.6.1.4.1.1429.1.10.2.1.5.2.1.9

saDsanConfigVideoPid

This object reports the elementary stream video PID for the MPEG stream associated with a particular program number in positive integer format.

Access: Read-only

Syntax: Integer

OID: 1.3.6.1.4.1.1429.1.10.2.1.5.2.1.10

saDsanConfigAudioPid

This object reports the elementary stream audio PID for the MPEG stream associated with a particular program number in positive integer format.

Access: Read-only

Syntax: Integer

OID: 1.3.6.1.4.1.1429.1.10.2.1.5.2.1.11

saDsanConfigSaudioPid

This object reports the elementary stream second audio PID for the MPEG stream associated with a particular program number in positive integer format.

Access: Read-only

Syntax: Integer

OID: 1.3.6.1.4.1.1429.1.10.2.1.5.2.1.12

saDsanConfigCaPid

This object reports the elementary stream conditional access PID for the MPEG stream associated with a particular program number in positive integer format.

Access: Read-only

Syntax: Integer

OID: 1.3.6.1.4.1.1429.1.10.2.1.5.2.1.13

saDsanConfigChannelEia

This object reports the EIA output channel number assigned to the program number in the DSAN configuration file in positive integer format.

Access: Read-only

Syntax: Integer

OID: 1.3.6.1.4.1.1429.1.10.2.1.5.2.1.14

saDsanConfigChannelStatus

This object reports the current error status of the channel.

Possible values are:

- unknown (1)
- noError (2)
- error (3)

Access: Read-only

Syntax: Integer

OID: 1.3.6.1.4.1.1429.1.10.2.1.5.2.1.15

saDsanConfigChannelStatusInfo

This object provides additional information on channel status.

Possible values are listed below along with their descriptions.

Value	Description
1	remapNoError
2	configEntryInvalidError
3	srcidNotFoundError
4	qamCarriersOverflowError
5	auxPortNotValidError
6	wbFreqRemapError
7	unknownQamModeError
8	configEntryDuplicate
9	psiError
10	serviceUnavailable
11	qamDemodNoLockError

Value	Description
12	unknown
13	auxOutOfRangeError
14	auxPortStreamLockError
15	auxLossOfSource
16	auxLossOfStreamError
17	invalidVideoResolution
18	auxCommunicationError
19	caUnknownError
20	caNotStaged
21	caNotInitialized
22	channelNotAuthorized
23	caCommunicationError
24	lateKeysError
25	caChannelError
26	caOtherError

Access: Read-only

Syntax: Integer

OID: 1.3.6.1.4.1.1429.1.10.2.1.5.2.1.16

saDsanConfigEncryption

This object serves as an indicator of channel encryption.

Possible values are:

- unknown (1)
- clear (2)
- encrypted (3)

Access: Read-only

Syntax: Integer

OID: 1.3.6.1.4.1.1429.1.10.2.1.5.2.1.17

saDsanConfigCaStatus

This object indicates the state of the conditional access channel.

Possible values are:

- ok (1)
- unknown (2)
- notStaged (3)
- notInitialized (4)
- ready (5)
- notAuthorized (6)
- communicationError (7)
- channelError (8)
- otherError (9)
- na (10)

Access: Read-only

Syntax: Integer

OID: 1.3.6.1.4.1.1429.1.10.2.1.5.2.1.18

saDsanConfigLateKeyStatus

This object reports the late key status.

Possible values are:

- na (1)
- unknown (2)
- ok (3)
- fail (4)
- intermittent (5)

Access: Read-only

Syntax: Integer

OID: 1.3.6.1.4.1.1429.1.10.2.1.5.2.1.19

Enhanced Channel Map Group

The Enhanced Channel Map group and its corresponding objects are not supported in the DSAN 8200. They are included here for reference only.

saDsanBfsAvailable

This object is not supported in the DSAN 8200.

OID: 1.3.6.1.4.1.1429.1.10.2.1.5.3.1

saDsanBfsLoaded

This object is not supported in the DSAN 8200.

OID: 1.3.6.1.4.1.1429.1.10.2.1.5.3.2

saDsanGdfRuleAction

This object is not supported in the DSAN 8200.

OID: 1.3.6.1.4.1.1429.1.10.2.1.5.3.3

saDsanGdfLastLoadTime

This object is not supported in the DSAN 8200.

OID: 1.3.6.1.4.1.1429.1.10.2.1.5.3.4

saDsanGdfLoadError

This object is not supported in the DSAN 8200.

OID: 1.3.6.1.4.1.1429.1.10.2.1.5.3.5

saDsanEnhPhyHubId

This object is not supported in the DSAN 8200.

OID: 1.3.6.1.4.1.1429.1.10.2.1.5.3.6

saDsanEnhVirHubId

This object is not supported in the DSAN 8200.

OID: 1.3.6.1.4.1.1429.1.10.2.1.5.3.7

saDsanEnhLugId

This object is not supported in the DSAN 8200.

OID: 1.3.6.1.4.1.1429.1.10.2.1.5.3.8

saDsanActiveGdfStatement

This object is not supported in the DSAN 8200.

OID: 1.3.6.1.4.1.1429.1.10.2.1.5.3.9

Software Image Group

Use the Software Image group to view information about current DSAN software.

saDsanSwImageVersion

This object reports the current software image version number in release.major.minor format; for example, 1.2.3.

Access: Read-only

Syntax: DisplayString

OID: 1.3.6.1.4.1.1429.1.10.2.1.6.1

saDsanSwImageBootLoaderVersion

This object reports the current software image bootloader version number in major.minor format; for example, 1.2.

Access: Read-only

Syntax: DisplayString

OID: 1.3.6.1.4.1.1429.1.10.2.1.6.2

saDsanSwImageFpga0Version

This object reports the DSAN FPGA (FPGA 0) software image version number in positive integer format; for example, 11.

Access: Read-only

Syntax: DisplayString

OID: 1.3.6.1.4.1.1429.1.10.2.1.6.3

saDsanSwImageFpga1Version

This object reports the DSAN co-processor (FPGA 1) software image version number in positive integer format; for example, 9.

Access: Read-only

Syntax: DisplayString

OID: 1.3.6.1.4.1.1429.1.10.2.1.6.4

saDsanSwImageDaVinciVersion

This object reports the current DaVinci software image version number in release.major.minor format; for example, 1.2.3.

Access: Read-only

Syntax: DisplayString

OID: 1.3.6.1.4.1.1429.1.10.2.1.6.5

saDsanSwImageDownloadStatus

This object reports one of the defined values for the status of the image download operation.

Possible values are:

- successful (1)
- unreachable (2)
- incomplete (3)
- inProgress (4)
- invalidImage (5)

Access: Read-only

Syntax: Integer

OID: 1.3.6.1.4.1.1429.1.10.2.1.6.6

saDsanSwImagePakVersion

This object reports the software version number of the PAK library.

Access: Read-only

Syntax: DisplayString

OID: 1.3.6.1.4.1.1429.1.10.2.1.6.8

saDsanSwImageDtaVersion

This object reports the software version number of the DTA image.

Access: Read-only

Syntax: DisplayString

OID: 1.3.6.1.4.1.1429.1.10.2.1.6.9

Wideband Tuner Group

The Wideband Tuner group consists mainly of the Wideband Tuner table. Use this table to view current DSAN tuner information.

saDsanWbTunerEntry

Row of table, indexed by the entry number.

Access: N/A

OID: 1.3.6.1.4.1.1429.1.10.2.1.7.1.1

saDsanWbTunerId

This object reports the identifier for each wideband tuner.

Possible values are:

- bandA (1)
- bandB (2)
- bandC (3)

Access: N/A

Syntax: Integer

OID: 1.3.6.1.4.1.1429.1.10.2.1.7.1.1.1

saDsanWbTunerFrequency

This object reports the wideband tuner frequency in Hz.

Access: Read-only

Syntax: Unsigned

OID: 1.3.6.1.4.1.1429.1.10.2.1.7.1.1.2

saDsanWbTunerPowerState

This object reports the current state of the wideband tuner power supply. Possible values are on (1) and off (2).

Access: Read-only

Syntax: Integer

OID: 1.3.6.1.4.1.1429.1.10.2.1.7.1.1.3

Wideband Receiver Group

The Wideband Receiver group consists mainly of the Wideband Receiver Demod table. Use this table to view current DSAN wideband receiver operating parameters.

saDsanWbRcvrDemodEntry

Row of table, indexed by the entry number.

Access: N/A

OID: 1.3.6.1.4.1.1429.1.10.2.1.8.4.1

saDsanWbRcvrDemodId

This object reports the identifier for each of the demodulators in the BL12K. Possible values are in the range 1 to 16.

Access: Read-only

Syntax: Integer

OID: 1.3.6.1.4.1.1429.1.10.2.1.8.4.1.1

saDsanWbRcvrDemodFrequency

This object reports the current demodulator frequency in Hz.

Access: Read-only

Syntax: Integer

OID: 1.3.6.1.4.1.1429.1.10.2.1.8.4.1.2

saDsanWbRcvrDemodPowerLevel

This object reports the current demodulator power level in dBmV.

Access: Read-only

Syntax: Integer

OID: 1.3.6.1.4.1.1429.1.10.2.1.8.4.1.3

saDsanWbRcvrDemodEnable

This object indicates the current operating state of the demodulator. Possible values are enable (1) and disable (2).

Access: Read-only

Syntax: Integer

OID: 1.3.6.1.4.1.1429.1.10.2.1.8.4.1.4

saDsanWbRcvrDemodRsUncorrErrorCount

This object reports the number of uncorrected errors for the demodulator.

Access: Read-only

Syntax: Counter

OID: 1.3.6.1.4.1.1429.1.10.2.1.8.4.1.5

saDsanWbRcvrDemodRsBlockCount

This object reports the current RS block count, which is the total number of blocks transmitted per demodulator.

Access: Counter

Syntax: Integer

OID: 1.3.6.1.4.1.1429.1.10.2.1.8.4.1.6

saDsanWbRcvrDemodRsCorrErrorCount

This object reports the current RS corrected error count, which is the total number of corrected blocks per demodulator.

Access: Read-only

Syntax: Counter

OID: 1.3.6.1.4.1.1429.1.10.2.1.8.4.1.7

saDsanWbRcvrDemodFecStatus

This object reports the current demodulator forward error correction (FEC) status.

Possible values are:

- unknown (1)
- unlocked (2)
- locked (3)

Access: Read-only

Syntax: Integer

OID: 1.3.6.1.4.1.1429.1.10.2.1.8.4.1.8

MPEG Group

The MPEG group consists mainly of the Channel Map, which you can use to view EAS channel source program information.

saDsanEasChannelSrcQam

This object reports the QAM index location of the forced tuned EAS source channel in positive integer format.

Access: Read-only

Syntax: Integer

OID: 1.3.6.1.4.1.1429.1.10.2.1.9.1.1

saDsanEasChannelSrcProgramNum

This object reports the program number of the forced tuned EAS source channel in positive integer format.

Access: Read-only

Syntax: Integer

OID: 1.3.6.1.4.1.1429.1.10.2.1.9.1.2

Alarm Group

The Alarm group consists mainly of the following tables, which report the details of all defined alarms for the system:

- Alarm Info
- Current Alarm
- Alarm Traps

The following pages describe the elements used to investigate DSAN alarms and access the information in these tables.

saDsanAlarmLastTimeStamp

This object reports the time of the last alarm in date/time format.

Access: Read-only

Syntax: DateAndTime

OID: 1.3.6.1.4.1.1429.1.10.2.1.10.1.1

Alarm Info Table

The Alarm Info table provides details on each alarm by alarm ID, including alarm type, severity, category, and alarm threshold values.

saDsanAlarmInfoEntry

Row of table, indexed by the entry number.

OID: 1.3.6.1.4.1.1429.1.10.2.1.10.2.1

saDsanAlarmId

This object reports the alarm identifier in sequential positive integer format. Possible values are in the range 1 to 2,147,483,647.

Access: N/A

Syntax: Integer

OID: 1.3.6.1.4.1.1429.1.10.2.1.10.2.1.1

saDsanAlarmDescription

This object contains the alarm description.

Access: Read-only

Syntax: DisplayString

OID: 1.3.6.1.4.1.1429.1.10.2.1.10.2.1.2

saDsanAlarmCategory

This object reports the category of the alarm.

Possible values are:

- security (1)
- transport (2)
- hardware (3)
- auxiliary (4)
- communication (5)
- software (6)
- powerkey (7)
- dta (8)

Access: Read-only

Syntax: Integer

OID: 1.3.6.1.4.1.1429.1.10.2.1.10.2.1.3

saDsanAlarmSeverity

This object reports the severity level of the alarm.

Possible values are:

- emergency (1)
- alert (2)
- critical (3)
- error (4)
- warning (5)
- notice (6)
- information (7)
- debug (8)

Access: Read-write

Syntax: Integer

OID: 1.3.6.1.4.1.1429.1.10.2.1.10.2.1.4

saDsanAlarmLowThreshold

This object reports the low threshold setting for the alarm. If a low threshold setting is not relevant to the alarm, a default value of -1 is reported.

Access: Read-only

Syntax: Integer

OID: 1.3.6.1.4.1.1429.1.10.2.1.10.2.1.5

saDsanAlarmHighThreshold

This object reports the high threshold setting for the alarm. If a high threshold setting is not relevant to the alarm, a default value of -1 is reported.

Access: Read-only

Syntax: Integer

OID: 1.3.6.1.4.1.1429.1.10.2.1.10.2.1.6

Current Alarm Table

The Current Alarm table provides details on each alarm by alarm ID, including alarm type, severity, category, and alarm threshold values.

saDsanCurrentAlarmEntry

Row of table, indexed by the entry number.

OID: 1.3.6.1.4.1.1429.1.10.2.1.10.3.1

saDsanAlarmObjectId

This object reports the OID of the affected object or device.

Access: Read-only

Syntax: Object Identifier

OID: 1.3.6.1.4.1.1429.1.10.2.1.10.3.1.1

saDsanAlarmTimeStamp

This object reports the date and time of the alarm event in date/time format.

Access: Read-only

Syntax: DateAndTime

OID: 1.3.6.1.4.1.1429.1.10.2.1.10.3.1.2

saDsanAlarmDetails

This object contains a text string that provides additional information about the alarm event.

Access: Read-only

Syntax: DisplayString

OID: 1.3.6.1.4.1.1429.1.10.2.1.10.3.1.3

saDsanAlarmSequenceNumber

This object reports the sequence number for the current alarm. Use this value to detect any missed traps.

Access: Read-only

Syntax: Integer

OID: 1.3.6.1.4.1.1429.1.10.2.1.10.3.1.4

Alarm Traps Table

The Alarm Traps table contains information on traps sent by DSAN alarms.

saDsanAlarmStatus

This object reports a status for the alarm to indicate whether the alarm has been set or cleared. Possible values are set (1) or clear (2).

Access: Read-only

Syntax: Integer

OID: 1.3.6.1.4.1.1429.1.10.2.1.10.4.1

saDsanAlarmTrapInfo

This object contains the information sent by a corresponding SNMP v2c alarm trap.

Possible contents include:

- alarmId
- alarmCategory
- alarmSeverity
- alarmStatus
- alarmDescription
- alarmDetails

- alarmTimeStamp
- alarmObjectId
- AlarmSequenceNumber

Access: Notification Type

OID: 1.3.6.1.4.1.1429.1.10.2.1.10.4.2.1

DTA Group

The DTA Group and its corresponding objects are not supported in the DSAN 8200. They are included here for reference only.

saDsanDtaProcessorStatus

This object is not supported in the DSAN 8200.

OID: 1.3.6.1.4.1.1429.1.10.2.1.11.1

saDsanDtaState

This object is not supported in the DSAN 8200.

OID: 1.3.6.1.4.1.1429.1.10.2.1.11.2

saDsanDtaCiscoMac

This object is not supported in the DSAN 8200.

OID: 1.3.6.1.4.1.1429.1.10.2.1.11.3

saDsanMotId

This object is not supported in the DSAN 8200.

OID: 1.3.6.1.4.1.1429.1.10.2.1.11.4

saDsanDtaSwVersion

This object is not supported in the DSAN 8200.

OID: 1.3.6.1.4.1.1429.1.10.2.1.11.5

Manual Configuration Group

The Manual Configuration group and its corresponding objects are not supported in this DSAN model. They are included here for reference only.

saDsanManCfgServerName

This object is not supported in this DSAN model.

OID: 1.3.6.1.4.1.1429.1.10.2.1.14.1.1.1

saDsanManCfgServerIpAddress

This object is not supported in this DSAN model.

OID: 1.3.6.1.4.1.1429.1.10.2.1.14.1.1.2

saDsanManCfgHostFilePath

This object is not supported in this DSAN model.

OID: 1.3.6.1.4.1.1429.1.10.2.1.14.1.1.3

saDsanManCfgSiDataFilePath

This object is not supported in this DSAN model.

OID: 1.3.6.1.4.1.1429.1.10.2.1.14.1.1.4

saDsanManCfgDownloadTrigger

This object is not supported in this DSAN model.

OID: 1.3.6.1.4.1.1429.1.10.2.1.14.1.1.5

saDsanManCfgDownloadStatus

This object is not supported in this DSAN model.

OID: 1.3.6.1.4.1.1429.1.10.2.1.14.1.1.6

saDsanManCfgDownloadString

This object is not supported in this DSAN model.

OID: 1.3.6.1.4.1.1429.1.10.2.1.14.1.1.7

saDsanManCfgDownloadString2

This object is not supported in this DSAN model.

OID: 1.3.6.1.4.1.1429.1.10.2.1.14.1.1.8

saDsanManCfgLastSuccessfulServerName

This object is not supported in this DSAN model.

OID: 1.3.6.1.4.1.1429.1.10.2.1.14.1.1.9

saDsanManCfgLastSuccessfulServerIpAddress

This object is not supported in this DSAN model.

OID: 1.3.6.1.4.1.1429.1.10.2.1.14.1.1.10

saDsanManCfgLastSuccessfulHostFile

This object is not supported in this DSAN model.

OID: 1.3.6.1.4.1.1429.1.10.2.1.14.1.1.11

saDsanManCfgLastSuccessfulSiDataFile

This object is not supported in this DSAN model.

OID: 1.3.6.1.4.1.1429.1.10.2.1.14.1.1.12

saDsanManCfgDownloadError

This object is not supported in this DSAN model.

OID: 1.3.6.1.4.1.1429.1.10.2.1.14.1.1.13

DSAN SNMP Alarms and Traps

Shown below are all the SNMP traps available in DSAN.

Index	Description	Category	Level	Low	High	Notes
1	Aux loss of source	Auxiliary (4)	Error (4)	-1	-1	
2	Aux Input is invalid	Auxiliary (4)	Error (4)	-1	-1	
3	Aux stream not present	Auxiliary (4)	Error (4)	-1	-1	
4	Demod Errors Detected	Transport (2)	Warning (5)	10	1500	
5	Internal Temperature is not normal (Major)	Hardware (3)	Error (4)	-40	80	
6	Internal Temperature is not normal (Minor)	Hardware (3)	Warning (5)	-30	70	
7	Lid Opened	Security (1)	Warning (5)	-1	-1	
8	Config file is corrupt	Communication (5)	Critical (3)	-1	-1	
9	Config file has invalid EIA channels	Communication (5)	Error (4)	-1	-1	
10	Config file has Aux channel out of range	Communication (5)	Error (4)	-1	-1	
11	Source ID not present in SI	Communication (5)	Error (4)	-1	-1	
12	Not all channels can be mapped by the three wideband tuners	Communication (5)	Error (4)	-1	-1	
13	Mandatory TLV is Missing	Communication (5)	Critical (3)	-1	-1	
14	Software Upgrade Failed	Software (6)	Notice (6)	-1	-1	
15	Software Upgrade Performed Successfully	Software (6)	Information (7)	-1	-1	
16	Host is out of memory	Hardware (3)	Emergency (1)	-1	-1	
17	Unable to communicate with the Video Processor	Communication (5)	Emergency (1)	-1	-1	
18	Docsis Registered Successfully	Communication (5)	Information (7)	-1	-1	
19	Docsis Connectivity Lost	Communication (5)	Error (4)	-1	-1	
20	Docsis Rx Channel Not Found	Communication (5)	Error (4)	-1	-1	
21	Docsis Rx OOB Data Connection Lost	Communication (5)	Error (4)	-1	-1	
22	Docsis Tx Ranging Failed	Communication (5)	Error (4)	-1	-1	
23	Docsis eCM DHCP Failed	Communication (5)	Error (4)	-1	-1	
24	Docsis eCM Config File Retrieval Error	Communication (5)	Error (4)	-1	-1	
25	Docsis Tx Data Path Lost	Communication (5)	Error (4)	-1	-1	
26	Config File Retrieval Error	Communication (5)	Critical (3)	-1	-1	
27	SI Changed	Communication (5)	Information (7)	-1	-1	
28	SI is Available	Communication (5)	Information (7)	-1	-1	
29	Channel Map Changed	Communication (5)	Information (7)	-1	-1	

Index	Description	Category	Level	Low	High	Notes
30	QAM Lock Failed	Transport (2)	Error (4)	-1	-1	
31	PSI Error	Transport (2)	Error (4)	-1	-1	
32	EAS Channel not in SI	Transport (2)	Notice (6)	-1	-1	1
33	EAS Channel not in PSI	Transport (2)	Notice (6)	-1	-1	1
34	EAS Channel not one of the Prov. Channels	Transport (2)	Notice (6)	-1	-1	
35	Service Unavailable	Transport (2)	Error (4)	-1	-1	
36	Service Provisioning Warning	Communication (5)	Warning (5)	-1	-1	
37	Authentication failure during login	Security (1)	Notice (6)	-1	-1	
38	Log space near capacity	Software (6)	Notice (6)	-1	-1	
39	Login Successful	Security (1)	Information (7)	-1	-1	
40	Login Failed	Security (1)	Notice (6)	-1	-1	
41	Logged out	Security (1)	Information (7)	-1	-1	
42	Login Session timed out	Security (1)	Information (7)	-1	-1	
43	Download Started	Software (6)	Information (7)	-1	-1	
44	File Transfer Success	Software (6)	Information (7)	-1	-1	
45	File Transfer Failed	Software (6)	Notice (6)	-1	-1	
46	Reset	Software (6)	Notice (6)	-1	-1	
47	Log Destination Changed	Security (1)	Information (7)	-1	-1	
48	Log parameters were not set	Software (6)	Information (7)	-1	-1	
49	A Hardware error occurred	Hardware (3)	Emergency (1)	-1	-1	
50	eHost Has Not Received a Valid DHCP Offer	Communication (5)	Error (4)	-1	-1	
51	Invalid Video Resolution	Transport (2)	Error (4)	-1	-1	
52	Aux Communication Error	Auxiliary (4)	Error (4)	-1	-1	
53	DAXI Fan Fault	Auxiliary (4)	Error (4)	-1	-1	
54	DAXI Temperature out of range	Auxiliary (4)	Error (4)	-1	-1	
55	DSAN Configuration Failed	Communication (5)	Alert (2)	-1	-1	
56	Channel Not Authorized	PowerKey (7)	Error (4)	-1	-1	
57	Conditional Access Error	PowerKey (7)	Error (4)	-1	-1	
58	Late Key Error	PowerKey (7)	Error (4)	-1	-1	
59	Secure Micro Failed to Initialize	PowerKey (7)	Error (4)	-1	-1	
60	PowerKEY Communication Error	PowerKey (7)	Error (4)	-1	-1	
61	PowerKEY EMM Last Received Threshold	PowerKey (7)	Warning (5)	-1	-1	
62	DSMCC OOB data parser stopped	Communication (5)	Error (4)	-1	-1	
63	PKEY OOB data parser stopped	Communication (5)	Error (4)	-1	-1	
64	SI OOB data parser stopped	Communication (5)	Error (4)	-1	-1	
65	EAS OOB data parser stopped	Communication (5)	Error (4)	-1	-1	

Index	Description	Category	Level	Low	High	Notes
66	Up/Dn Converter PLL lock fail	Transport (2)	Error (4)	-1	-1	
67	Boot Error: Booted old image	Software (6)	Notice (6)	-1	-1	2
68	SCTE-127 output channel not set	Communication (5)	Notice (6)	-1	-1	2
69	No UNConfig Received	Communication (5)	Error (4)	-1	-1	2
70	Davic Rx Channel Not Found	Communication (5)	Error (4)	-1	-1	2
71	Davic Rx OOB Data Lost	Communication (5)	Error (4)	-1	-1	2
72	EAS output channel not set	Communication (5)	Error (4)	-1	-1	2
73	Cannot tune to EAS output chan	Communication (5)	Critical (3)	-1	-1	2
74	BFS Not Available	Communication (5)	Error (4)	-1	-1	2
75	First GDF Match Channel Map File Not Present in BFS	Communication (5)	Error (4)	-1	-1	2
76	Davic Registered Successfully	Communication (5)	Information (7)	-1	-1	2
77	EAS output channel invalid	Communication (5)	Error (4)	-1	-1	2
78	SI Data Not Available	Communication (5)	Error (4)	-1	-1	
79	EAS force tune channel errored	Communication (5)	Notice (6)	-1	-1	2
80	SI Data Packet Loss detected	Communication (5)	Warning (5)	-1	-1	

Note:

1 The alarm severity level for this trap is set to Notice as no Clear Alarm trap is provided for this trap. The associated Event Log level is set to Error.

2 This trap is not supported in the DSAN 8200.

7

Event Log

The event log records certain events in the DSAN system for later reference. This chapter describes the structure of the event log and identifies actions that it may record. Instructions are provided for viewing and clearing the event log using SNMP.

In This Chapter

Introduction

The DSAN maintains a log of certain events that occur in the system. You can view this *event log* by retrieving it via TFTP using SNMP.

The event log cannot be viewed locally at the DSAN. It can only be viewed by transferring the log via SNMP and opening the log file with a text editor or spreadsheet application. The log file is comma-delimited, so it can be viewed easily as a spreadsheet.

The event log holds up to 3 megabytes of data, which is enough to store over 5,000 events. If a new event is recorded after the log becomes full, the oldest third of the events in the log are removed automatically so that new events can be added.

To avoid loss of event data, we recommend that the event log be saved and emptied before it reaches full capacity. To help manage this activity, several traps are sent to indicate that the log is nearing capacity, and one trap is sent to indicate that the log is full.

To save and empty the event log, you first use SNMP to upload the log file from the DSAN to a TFTP server. Then, again using SNMP, you clear the event log file on the DSAN for new events.

This chapter describes the event log and provides instructions for uploading and clearing the event log using SNMP.

Event Log Fields

Each event in the event log contains the following six fields.

Date and Time (Timestamp)

This field records the date and time that the event was logged.

System Name

This field records the system in which the event occurred. It always contains the value **dsan**.

Application Name

This field records the application in which the event occurred. It contains one of the following possible values:

- dsanapp
- dsandiag
- dsanpal

Event Source (Process)

This field records the process in which the event occurred. It contains one of the following possible values:

- APPLICATION
- DIAGNOSTICS
- PAL APPLICATION

Event Category (SubProcess)

This field records the category of the event. It contains one of the following possible values:

- CONFIGURATION
- SI
- TUNER
- EAS
- LOGGING
- AUX
- TEMPERATURE
- SECURITY
- DOWNLOAD
- MEMORY
- VIDEO PROCESSOR
- DOCSIS
- TRANSPORT
- LOGIN
- SNMP
- REBOOT
- SYSTEM
- CLI
- PKEY
- PAL
- DTA PROCESSOR

Event Level (Severity)

This field records the severity of the event. It contains one of the following possible values:

- Emergency event (0) - "Fatal" hardware or software errors.
- Alert event (1) - A serious failure, either hardware or software malfunctioning.
- Critical event (2) - A serious failure that prevents the device from transmitting data, but could be recovered without rebooting the system.
- Error event (3) - A failure that could interrupt the normal data flow, but does not cause device to reboot. Error events can be reported in real time by using the Trap mechanism.
- Warning event (4) - A failure that could interrupt the normal data flow.
- Notice event (5) - An event of importance that is not a failure.
- Information event (6)
- Debug event (7)

Event Description

This field contains text describing the event in more detail.

Event ID (Counter)

This field contains a unique numerical assignment for each log entry.

Events

The table below lists the events and identifies their respective event categories.

Source	Category	Level	Description
Application	AUX	Error (3)	Aux Invalid Error: Aux Input Invalid
Application	AUX	Error (3)	Aux Port Error: Aux Invalid Input Cleared
Application	AUX	Error (3)	Aux Port Error: Loss of Source
Application	AUX	Error (3)	Aux Port Error: Source Present
Application	AUX	Error (3)	Aux Port Error: Communication Error
Application	AUX	Error (3)	Aux Port Error: Communicating
Application	AUX	Error (3)	Aux Port Error: Loss of Stream
Application	AUX	Error (3)	Aux Port Error: Stream Restored
Application	AUX	Error (3)	Aux Error: DAXI Fan Fault
Application	AUX	Error (3)	Aux Error: DAXI Fan OK

Source	Category	Level	Description
Application	AUX	Error (3)	Aux Error: Temperature out of range on DAXI Port A1/A2 <temperature> degC
Application	AUX	Error (3)	Aux Error: DAXI Temperature out of range
Application	AUX	Error (3)	Aux Error: DAXI Temperature within range
Application	CLI	Information (6)	CLI command > [cmdStatus = <value>]
Application	Configuration	Error (3)	Bad Config File. SrcId: <number> OutputCh: <number> Unknown Qammode: <number> For Freq: <number>
Application	Configuration	Error (3)	SrcId Not Found. SrcId: <number> OutputCh: <number>
Application	Configuration	Error (3)	Plant Config Error. Cannot reach SrcId: <number> QAMFreq: <number> ProgNo: <number> OutputCh: <number> isAux: <number>
Application	Configuration	Error (3)	Plant Config Error. QAM Carriers overflowed. SrcId: <number> QAMFreq: <number> ProgNo: <number> OutputCh: <number> isAux: <number>
Application	Configuration	Error (3)	Configuration File Error: SHA1 Checksum failed
Application	Configuration	Error (3)	Configuration File Error: Invalid EIA channels present in config file.
Application	Configuration	Error (3)	Configuration File Error: Out of range Aux channel(s) present in config file.
Application	Configuration	Warning (4)	Config File Error: Ran out of space for Output Channel Map TLV entries Ch: <number>
Application	Configuration	Warning (4)	Service Provisioning Warning: Output Map Channel <number> outside of 2-78, 95-99 range
Application	Configuration	Warning (4)	Config File Error: Ran out of space for Aux Output Channel Map TLVs: Ch <number>
Application	Configuration	Warning (4)	Service Provisioning Warning: Aux Output Map Channel <number> outside of 2-78, 95-99 range

Source	Category	Level	Description
Application	Configuration	Warning (4)	Service Provisioning Warning: Aux Input Map Channel <number> outside of 1-8 range
Application	Configuration	Warning (4)	Service Provisioning Warning: Ch <number> Present more than once in Configuration File
Application	Configuration	Warning (4)	Service Provisioning Warning: Ch <number> and <number> using the same Source ID: <number>
Application	Configuration	Warning (4)	Service Provisioning Warning: Aux Ch <number> Present more than once in Configuration File
Application	Configuration	Warning (4)	Service Provisioning Warning: Aux Ch <number> and <number> using the same Aux Input Source: <number>
Application	Configuration	Error (3)	Configuration File Error: Required Version TLV 217.20 Not Present
Application	Configuration	Error (3)	Configuration File Error: Required VCT_ID TLV 217.25 Not Present
Application	Configuration	Error (3)	Configuration File Error: Required SNMP Community String TLV 217.53 Not Present
Application	Configuration	Information (6)	ConfigFileValidation: New Remap requires Wideband tuners to move, complete teardown in progress
Application	Configuration	Information (6)	ConfigFileValidation: New Remap requires a demod change or a tuner addition/subtraction
Application	Configuration	Information (6)	ConfiFileValidation: New Remap Requires only individual channel changes
Application	Configuration	Information (6)	ConfigFileValidation: Map is the same as previous ignoring...
Application	Configuration	Information (6)	Channel remap Started, DSAN Reconfiguring...
Application	Configuration	Information (6)	Invalid EIA Channel in EAS. Found EIA <channel>
Application	Configuration	Information (6)	EAS force tune channel: <channel> failed due to errored provisioned channel
Application	Configuration	Error (3)	Cannot tune to EAS output channel. EAS src ID: <source ID> Output Channel: <channel>

Source	Category	Level	Description
Application	DOCSIS	Information (6)	Docsis eCM Registration Complete.
Application	DOCSIS	Error (3)	DOCSIS Failed to attempt to register
Application	DOCSIS	Information (6)	DOCSIS Registration Successful
Application	DOCSIS	Error (3)	Failed to TFTP MDTA Configuration File
Application	DOCSIS	Information (6)	TFTP MDTA Configuration File Successful
Application	DOCSIS	Information (6)	DOCSIS Connectivity Lost
Application	DOCSIS	Information (6)	DOCSIS Connectivity Found
Application	DOCSIS	Error (3)	All DOCSIS OOB Data Flows Stopped
Application	DOCSIS	Error (3)	All DOCSIS OOB Data Flows Lost
Application	DOCSIS	Information (6)	DOCSIS Acquired OOB Data Tunnel Connectivity
Application	DOCSIS	Information (6)	DOCSIS Lost OOB Data Tunnel Connectivity
Application	DOCSIS	Information (6)	DOCSIS Rx Scan Started
Application	DOCSIS	Information (6)	DOCSIS Rx Scan Completed Successfully
Application	DOCSIS	Information (6)	DOCSIS Rx Scan Failed
Application	DOCSIS	Information (6)	DOCSIS eCM Lost Reverser Data Connectivity (entered One-Way Operation)
Application	DOCSIS	Information (6)	DOCSIS eCM entered Two-Way Operational State
Application	DOCSIS	Information (6)	DOCSIS eCM Ranging Started
Application	DOCSIS	Information (6)	DOCSIS eCM Ranging Completed Successfully
Application	DOCSIS	Information (6)	DOCSIS eCM Ranging Failed
Application	DOCSIS	Information (6)	DOCSIS eCM DHCP Started
Application	DOCSIS	Information (6)	DOCSIS eCM DHCP Completed
Application	DOCSIS	Information (6)	DOCSIS eCM DHCP Failed
Application	DOCSIS	Information (6)	DOCSIS Config File TFTP Started
Application	DOCSIS	Information (6)	DOCSIS Config File TFTP Succeeded
Application	DOCSIS	Information (6)	DOCSIS Config File TFTP Failed
Application	DOCSIS	Information (6)	DOCSIS Software Upgraded Started
Application	DOCSIS	Information (6)	DOCSIS Software Upgrade Completed

Source	Category	Level	Description
Application	DOCSIS	Information (6)	DOCSIS Software Upgrade Failed
Application	DOCSIS	Error (3)	FATAL ERROR: Unable to Allocate <num> bytes to hold <num> OOB Dir Flow Lists
Application	DOCSIS	Error (3)	DOCSIS ADSG mode supported by this model
Application	DOCSIS	Error (3)	DOCSIS ADSG mode is not supported by this model, operating in a non-DSG mode
Application	DOCSIS	Error (3)	All DOCSIS OOB Parser Alarms are set until the parsers threads are activated
Application	DOCSIS	Error (3)	DOCSIS SubSystem reset required
Application	DOCSIS	Error (3)	Unable to add filter for UNConfig Data to Cisco CA Tunnel
Application	DOCSIS	Error (3)	Unable to add filter for UNPassthru Data to Cisco CA Tunnel
Application	DOCSIS	Error (3)	Unable to add filter for PowerKey Data to Cisco CA Tunnel
Application	DOCSIS	Error (3)	ERROR: Unable to find the Cisco CA Tunnel for PowerKey and DNCS DSM-CC Data
Application	DOCSIS	Error (3)	Unable to add filter for SCTE-65 SI Data Broadcast Tunnel
Application	DOCSIS	Error (3)	ERROR: Unable to find the Broadcast Tunnel for SCTE-65 SI Data
Application	DOCSIS	Error (3)	Unable to add filter for SCTE-18 EAS Data Broadcast Tunnel
Application	DOCSIS	Error (3)	ERROR: Unable to find the Broadcast Tunnel for SCTE-18 EAS Data
Application	DOCSIS	Error (3)	DSMCC Parser Stopped
Application	DOCSIS	Error (3)	SCTE-18 EAS Parser Stopped
Application	DOCSIS	Error (3)	SCTE-65 SI Parser Stopped
Application	DOCSIS	Error (3)	POWERKEY EMM Parser Stopped
Application	Download	Information (6)	Software Upgrade Success - Filename: goqam
Application	Download	Information (6)	Software Upgrade Failed - Invalid Image
Application	Download	Information (6)	Software Download Started
Application	Download	Information (6)	File Transfer Success - Filename: goqam

Source	Category	Level	Description
Application	Download	Information (6)	File Transfer Success
Application	Download	Information (6)	File Transfer Failed - Filename: goqam
Application	Download	Information (6)	File Transfer Failed
Application	Download	Information (6)	Software Upgrade Failed - Filename: goqam - Invalid Image
Application	Download	Information (6)	Software Upgrade Failed - Invalid Image
Application	EAS	Error (3)	EAS Force Tune not one of 82 provision channels but its present in SI SrcId: <srcId>
Application	EAS	Error (3)	EAS Force Tune not one of 82 provision channels AND force tune info NOT in SI SrcId: <srcId>
Application	EAS	Error (3)	EAS Event Code Length invalid in EAS message Id: <msg ID> Length of Event Code:<length>
Application	EAS	Information (6)	EAS Event: <eventId> Priority: <priority> is low
Application	EAS	Information (6)	do_EASRemapInProgress:
Application	Logging	Information (6)	CHG_LOG_DESTINATION. Log destination was changed to <ip address>.
Application	Logging	Information (6)	LOG_PARAMS_NOT_SET. Log Parameters were not set.
Application	Logging	Information (6)	LOG_CLEARED. Event Log was Cleared.
Application	Logging	Information (6)	TEST LOG ENTRY. Filling with test data....
Application	Login	Information (6)	Login Success
Application	Login	Information (6)	Login Authentication Failed
Application	Login	Information (6)	Login session timeout
Application	Login	Information (6)	Login Failed: Max number of sessions <Value> exceeded
Application	Login	Information (6)	Login Failed: Serial port login disabled
Application	Login	Information (6)	Log off Success
Application	Memory	Information (6)	Host memory available: <Value>%
Application	PKEY	Error (3)	CA Keys Late or Intermittent
Application	PKEY	Error (3)	CA Keys OK

Source	Category	Level	Description
Application	PKEY	Error (3)	PowerKey Communication Error
Application	PKEY	Error (3)	PowerKey Communication Restored
Application	PKEY	Error (3)	Conditional Access Channel Error
Application	PKEY	Error (3)	Conditional Access OK
Application	PKEY	Error (3)	Channel Not Authorized
Application	PKEY	Error (3)	Channel Authorized
Application	PKEY	Error (3)	EMMs have not been received for <number> days
Application	PKEY	Error (3)	EMMs Received [date]
Application	PKEY	Error (3)	EMMs Processed [date]
Application	PKEY	Error (3)	Secure Micro Not Initialized
Application	PKEY	Error (3)	Secure Micro Initialized
Application	Reboot	Emergency (0)	System Error: <reason>, Rebooting
Application	Reboot	Emergency (0)	<Hardware Block> Initialization Retry <count>, Rebooting
Application	Reboot	Information (6)	Reboot type: <Type>
Application	Reboot	Information (6)	Reboot type: Unknown
Application	Reboot	Information (6)	Primary software image boot failed - booted old image.
Application	Reboot	Information (6)	DSAN System Reboot Requested
Application	SI	Information (6)	VC # <Value> is Not Defined, DCM/VCM mismatch error in SI data
Application	SI	Information (6)	SI Available, All Virtual Channel Records are available
Application	SI	Information (6)	SI Table is READY, but not all Virtual Channel Records were received
Application	SI	Information (6)	SI Table is READY, missing records have now been received
Application	SI	Information (6)	SI Table has changed, delaying one minute minimum before declaring the table ready
Application	SI	Information (6)	SI Table Changed, All Virtual Channel Records are available
Application	SI	Information (6)	SI Table Changed, but not all Virtual Channel Records were received

Source	Category	Level	Description
Application	SI	Information (6)	SI Table is READY, Virtual Channels were dropped from the SI Table.
Application	SI	Information (6)	SI Table is NOT READY, Virtual Channels were dropped from the SI Table.
Application	SI	Information (6)	SI Parser has been reset. SI table has been cleared
Application	SI	Information (6)	SI Table Error, VCT Info is invalid for SourceID = <srcId>
Application	SI	Information (6)	Source ID = <srcId> is out of range. range is 0x00000000-0x0000ffff.
Application	SI	Error (3)	Excessive Packet Loss detected in SI Tunnel, Alarm Set
Application	SI	Error (3)	Clearing Alarm for Excessive Packet Loss detected in SI Tunnel
Application	SNMP	Warning (4)	Inactive SNMPD found. Restart SNMPD
Application	System	Emergency (0)	Self Test Failed
Application	System	Emergency (0)	Self Test Alarm Cleared
Application	System	Emergency (0)	Self Test Failed - Hardware Init
Application	System	Emergency (0)	Host Memory Error
Application	System	Emergency (0)	Host NVRAM Self Test Error
Application	System	Emergency (0)	FPGA Response Failed
Application	System	Emergency (0)	I2C Hardware Init Attempted - Retry Required
Application	System	Emergency (0)	NVM Init Attempted - Retry Required
Application	System	Emergency (0)	FPGA Init Attempted - Retry Required
Application	System	Emergency (0)	Thermometer Init Attempted - Retry Required
Application	System	Emergency (0)	RF NVM Init Attempted - Retry Required
Application	System	Emergency (0)	BL12K Init Attempted - Retry Required
Application	System	Emergency (0)	ATTEN Software Init Attempted - Retry Required
Application	System	Emergency (0)	WB Tuner Init Attempted - Retry Required
Application	System	Emergency (0)	Upconverter Init Attempted - Retry Required

Source	Category	Level	Description
Application	System	Emergency (0)	RFIOEXP Init Attempted - Retry Required
Application	System	Error (3)	Failed to program RF Board Attenuators
Application	System	Error (3)	Failed to program RF Board Upconverters
Application	System	Error (3)	Failed to initialize RF board NVM
Application	System	Error (3)	/proc/bus/usb/devices files are missing
Application	System	Error (3)	Can not communicate with BL12K
Application	System	Error (3)	NAND Flash Reinitialized
Application	System	Emergency (0)	FPGA Failed to Load
Application	System	Error (3)	Upconverter monitor: incompatible RF/digital boards combination
Application	System	Error (3)	Upconverter monitor: compatible RF/digital boards combination
Application	System	Error (3)	Upconverter monitor: persistent PLL lock loss
Application	System	Error (3)	Upconverter monitor: recovered PLL lock
Application	System	Error (3)	SI Parser Not Receiving Data, setting SI_LOST_ALARM alarm
Application	System	Error (3)	SI Parser Receiving Data, clearing SI_LOST_ALARM alarm
Application	System	Information (6)	DSAN Serial Number: <number>, Digital Board Rev: <number>, RF Board Rev: <number>, SW Revision: <number>
Application	Temperature	Warning (4)	Temperature <value> Exceeded Major High Threshold
Application	Temperature	Warning (4)	Temperature <value> Exceeded Major Low Threshold
Application	Temperature	Notice (5)	Temperature <value> Exceeded Minor High Threshold
Application	Temperature	Notice (5)	Temperature <value> Exceeded Minor Low Threshold
Application	Temperature	Notice (5)	Temperature <value> within Minor Thresholds
Application	Temperature	Notice (5)	Temperature <value> within Major Threshold
Application	Temperature	Warning (4)	Temperature <value> outside temp compensation range; using settings for <value> degrees

Source	Category	Level	Description
Application	Tuner	Emergency (0)	BL12k Reset <count> Times to Clear QAM Lock
Application	Tuner	Information (6)	RS Statistics: Block count rolled over for QAM Demod: <number>
Application	Tuner	Information (6)	RS Statistics: Last data before rollover: Total Blocks: <count> Corrected Blocks: <count> Uncorrectable Blocks: <count> Pct error: <percentage%>
Application	Tuner	Error (3)	Cannot communicate with the BL12K
Application	Tuner	Error (3)	QAM Tuner Lock obtained for Demod: <number>
Application	Tuner	Error (3)	QAM Tuner Lock Lost for Demod: <number>
Application	Tuner	Error (3)	QAM Tuner Lock Failed for Demod <number>
Application	Video Processor	Information (6)	System Failure: Video Processor Failed to Boot
Application	Video Processor	Information (6)	Video Processor Error: Communication Lost
Application	Video Processor	Information (6)	Video Processor Error: Unrecoverable PCI Error
Application	Video Processor	Information (6)	Video Processor Error: Unrecoverable SPI Error
Application	Video Processor	Emergency (0)	Video Processor Failed to Load
Application	Video Processor	Emergency (0)	Video Processor Load Failed
Application	Video Processor	Emergency (0)	Video Processor Not Ready
Application	Video Processor	Emergency (0)	Video Processor Memory Error
Application	Video Processor	Emergency (0)	Unrecoverable Error: BackEnd Data Error
Application	Video Processor	Emergency (0)	Unrecoverable Error: BackEnd Link Error
Application	Video Processor	Emergency (0)	Unrecoverable Error: BackEnd Timeout Error

Source	Category	Level	Description
Application	Video Processor	Emergency (0)	Unrecoverable Error: FrontEnd Link0 Error
Application	Video Processor	Emergency (0)	Unrecoverable Error: FrontEnd Link2 Error
Application	Video Processor	Emergency (0)	Unrecoverable Error: Decoder Dead Error
Application	Video Processor	Emergency (0)	Unrecoverable Error: PCI Bus Error
Application	Video Processor	Critical (2)	Recoverable Error: reset #<count>: BackEnd Data Error
Application	Video Processor	Critical (2)	Recoverable Error: reset #<count>: BackEnd Link Error
Application	Video Processor	Critical (2)	Recoverable Error: reset #<count>: BackEnd Timeout Error
Application	Video Processor	Critical (2)	Recoverable Error: reset #<count>: FrontEnd Link0 Error
Application	Video Processor	Critical (2)	Recoverable Error: reset #<count>: FrontEnd Link2 Error
Application	Video Processor	Critical (2)	Recoverable Error: reset #<count>: Decoder Dead Error
Application	Video Processor	Error (3)	Individual Decoder Reset Ch <number>
Application	Video Processor	Error (3)	Service Available Ch <number>
Application	Video Processor	Error (3)	Service Unavailable Ch <number>
Application	Video Processor	Error (3)	Invalid Video Resolution Ch <number>
Application	Video Processor	Error (3)	Invalid Video Resolution Ch <number> cleared
Application	Video Processor	Error (3)	PSI Error: Program Missing for Ch <number> missing from PAT
Application	Video Processor	Error (3)	PSI Error: Program Missing for Ch <number> missing from PAT cleared
Application	Video Processor	Error (3)	PSI Error: PMT Missing for Ch <number>
Application	Video Processor	Error (3)	PSI Error: PMT Missing for Ch <number> cleared

Source	Category	Level	Description
Application	Video Processor	Information (6)	PSI Error: PAT Missing on Demod <number>
Application	Video Processor	Information (6)	PSI Error: PAT Missing on Demod <number> cleared
Application	Video Processor	Information (6)	Failed to set BL81K DAC Gain
Application	Video Processor	Information (6)	Failed to enable BL81K DRC.
Application	Video Processor	Information (6)	Failed to disable BL81K DRC.
Application	Video Processor	Information (6)	Failed to read BL81K DAC gain settings from NVM. Using defaults.
PAL Application	PAL	Error (3)	Late Key(1): QAM#=<qam>, PID#=<pid>, TotTime=<time>, FPGATime=<time>, PALTime=<time>, PAKTime=<time>, RNGBuffPos=<val>, RNGBuffMin=<val>, RNGBuffAvg=<val>, RNGBuffMax=<val>, ISRMax=<val>
PAL Application	PAL	Information (6)	Launching PAL
PAL Application	PAL	Error (3)	Late Key(2): QAM#=<qam>, PID#=<pid>, TotTime=<time>, FPGATime=<time>, PALTime=<time>, PAKTime=<time>, RNGBuffPos=<val>, RNGBuffMin=<val>, RNGBuffAvg=<val>, RNGBuffMax=<val>, ISRMax=<val>, ecmGap=<val>

Source	Category	Level	Description
PAL Application	PAL	Error (3)	Late Key(3): QAM#=<qam>, PID#=<pid>, TotTime=<time>, FPGATime=<time>, PALTime=<time>, PAKTime=<time>, RNGBuffPos=<val>, RNGBuffMin=<val>, RNGBuffAvg=<val>, RNGBuffMax=<val>, ISRMax=<val>
PAL Application	PAL	Error (3)	Late Key(4): QAM#=<qam>, PID#=<pid>, TotTime=<time>, FPGATime=<time>, PALTime=<time>, PAKTime=<time>, RNGBuffPos=<val>, RNGBuffMin=<val>, RNGBuffAvg=<val>, RNGBuffMax=<val>, ISRMax=<val>, crypto/key=<key>
PAL Application	PAL	Error (3)	Late Key(5): QAM#=<qam>, PID#=<pid>, TotTime=<time>, FPGATime=<time>, PALTime=<time>, PAKTime=<time>, RNGBuffPos=<val>, RNGBuffMin=<val>, RNGBuffAvg=<val>, RNGBuffMax=<val>, ISRMax=<val>, ECMStatus=<status>

Source	Category	Level	Description
PAL Application	PAL	Error (3)	Late Key(6): QAM#=<qam>, PID#=<pid>, TotTime=<time>, FPGATime=<time>, PALTime=<time>, PAKTime=<time>, RNGBuffPos=<val>, RNGBuffMin=<val>, RNGBuffAvg=<val>, RNGBuffMax=<val>, ISRMax=<val>, ECMStatus=<status>
PAL Application	PAL	Error (3)	Delayed Key: QAM#=<qam>, PID#=<pid>, TotTime=<time>, FPGATime=<time>, PALTime=<time>, PAKTime=<time>, RNGBuffPos=<val>, RNGBuffMin=<val>, RNGBuffAvg=<val>, RNGBuffMax=<val>, ISRMax=<val>

Note: The events listed above are those that will be added to the event log when the logging level is set to "terse." Additional events may be logged by setting the log level to "verbose" or "debug" via SNMP when additional information is required.

Uploading and Viewing the Event Log

The event log can be uploaded from the DSAN to a TFTP server at any time. We recommend uploading the file before it reaches capacity to avoid losing the oldest events in the log as new events are added.

Transfer of the event log file is initiated using SNMP via the saDsanEventLog MIB group. For additional information on specific MIB element descriptions, refer to ***SNMP Management*** (on page 127).

To Upload the Event Log File

Complete the following steps in SNMP to initiate the event log file upload.

1. Set **saDsanEventLogIpAddress** to the IP address of the TFTP server.
2. Set **saDsanEventLogPath** to the path of the destination file on the TFTP server.
3. Set **saDsanEventLogFilename** to the destination file name on the TFTP server.
4. Set **saDsanEventLogUpload** to trigger (2).

In response to these commands, the DSAN will transfer the event log file.

To monitor the status of the event log upload, get the **saDsanEventLogLastUploadStatus** object.

Reviewing the Event Log File

The event log file is a comma-delimited text file that is readily viewable by text editors or spreadsheet applications.

The following shows a sample portion of the event log file as downloaded from the DSAN to a TFTP server.

```
Aug 15 12:54:37 dsan dsanapp: APPLICATION, TUNER, 3, QAM Tuner Lock Lost for
Demod:8 , 119

Aug 15 12:54:37 dsan dsanapp: APPLICATION, TUNER, 3, QAM Tuner Lock Lost for
Demod:9 , 120

Aug 15 12:54:37 dsan dsanapp: APPLICATION, TUNER, 3, QAM Tuner Lock Lost for
Demod:10 , 121

Aug 15 12:54:38 dsan dsanapp: APPLICATION, TUNER, 3, QAM Tuner Lock Lost for
Demod:11 , 122

Aug 15 12:54:38 dsan dsanapp: APPLICATION, TUNER, 3, QAM Tuner Lock Lost for
Demod:12 , 123

Aug 15 12:54:38 dsan dsanapp: APPLICATION, TUNER, 3, QAM Tuner Lock Lost for
Demod:13 , 124

Aug 15 12:54:38 dsan dsanapp: APPLICATION, TUNER, 3, QAM Tuner Lock Lost for
Demod:14 , 125

Aug 15 12:54:39 dsan dsanapp: APPLICATION, TUNER, 3, QAM Tuner Lock Lost for
Demod:15 , 126
```

```
Aug 15 12:54:39 dsan dsanapp: APPLICATION, TUNER, 3, QAM Tuner Lock Lost for
Demod:0 , 127

Aug 15 12:54:40 dsan dsanapp: APPLICATION, TUNER, 3, QAM Tuner Lock Lost for
Demod:1 , 128

Aug 15 12:54:40 dsan dsanapp: APPLICATION, TUNER, 3, QAM Tuner Lock Lost for
Demod:2 , 129

Aug 15 12:54:40 dsan dsanapp: APPLICATION, TUNER, 3, QAM Tuner Lock Lost for
Demod:3 , 130

Aug 15 12:54:40 dsan dsanapp: APPLICATION, TUNER, 3, QAM Tuner Lock Lost for
Demod:4 , 131

Aug 15 12:54:41 dsan dsanapp: APPLICATION, TUNER, 3, QAM Tuner Lock Lost for
Demod:5 , 132

Aug 15 12:54:41 dsan dsanapp: APPLICATION, TUNER, 3, QAM Tuner Lock Lost for
Demod:6 , 133

Aug 15 12:54:41 dsan dsanapp: APPLICATION, TUNER, 3, QAM Tuner Lock Lost for
Demod:7 , 134

Aug 15 12:55:26 dsan dsanapp: APPLICATION, TUNER, 3, QAM Tuner Lock obtained for
Demod:8 , 135

Aug 15 12:55:27 dsan dsanapp: APPLICATION, TUNER, 3, QAM Tuner Lock obtained for
Demod:11 , 136

Aug 15 12:55:28 dsan dsanapp: APPLICATION, TUNER, 3, QAM Tuner Lock obtained for
Demod:15 , 137

Aug 15 12:55:29 dsan dsanapp: APPLICATION, TUNER, 3, QAM Tuner Lock obtained for
Demod:0 , 138

Aug 15 12:55:29 dsan dsanapp: APPLICATION, TUNER, 3, QAM Tuner Lock obtained for
Demod:1 , 139

Aug 15 12:55:29 dsan dsanapp: APPLICATION, TUNER, 3, QAM Tuner Lock obtained for
Demod:2 , 140

Aug 15 12:55:30 dsan dsanapp: APPLICATION, TUNER, 3, QAM Tuner Lock obtained for
Demod:3 , 141

Aug 15 12:55:30 dsan dsanapp: APPLICATION, TUNER, 3, QAM Tuner Lock obtained for
Demod:4 , 142

Aug 15 12:55:30 dsan dsanapp: APPLICATION, TUNER, 3, QAM Tuner Lock obtained for
Demod:5 , 143

Aug 15 12:55:30 dsan dsanapp: APPLICATION, TUNER, 3, QAM Tuner Lock obtained for
Demod:6 , 144

Aug 15 12:55:31 dsan dsanapp: APPLICATION, TUNER, 3, QAM Tuner Lock obtained for
Demod:7 , 145

Aug 15 12:55:31 dsan dsanapp: APPLICATION, TUNER, 3, QAM Tuner Lock obtained for
Demod:9 , 146

Aug 15 12:55:31 dsan dsanapp: APPLICATION, TUNER, 3, QAM Tuner Lock obtained for
Demod:10 , 147

Aug 15 12:55:32 dsan dsanapp: APPLICATION, TUNER, 3, QAM Tuner Lock obtained for
Demod:12 , 148

Aug 15 12:55:32 dsan dsanapp: APPLICATION, TUNER, 3, QAM Tuner Lock obtained for
Demod:13 , 149

Aug 15 12:55:33 dsan dsanapp: APPLICATION, TUNER, 3, QAM Tuner Lock obtained for
Demod:14 , 150

Aug 15 15:29:19 dsan dsanapp: APPLICATION, LOGIN, 6, Login Success , 152
```

```
Aug 15 15:58:50 dsan dsanapp: APPLICATION, LOGIN, 6, Log off Success , 153
```

Note: This example shows what happens when all the QAMs were rebooted.

To Clear the Event Log

To prevent event wrapping when the log gets full, the log must be periodically cleared of events. Typically, the log is uploaded to a TFTP server before it is cleared from DSAN memory.

To clear the event log file on the DSAN, set **saDsanEventLogClear** to trigger (2) via SNMP.

Event Log-Related Traps

To alert the network management system of possible lost event log entries due to wrapping, the DSAN sends a trap as the log nears 80% capacity. When the log reaches 100% full and begins wrapping, the oldest 33% of the logs will be cleared. No trap notification is made when the log reaches 100% and the automatic clearing is performed.

The trap states "Log space near capacity." For more information, see DSAN SNMP Alarms and Traps.

8

Software Upgrade

This chapter explains the process of upgrading DSAN software, describes the expected results at each stage of the process, and identifies the common issues and corresponding error messages encountered during each stage.

In This Chapter

Upgrading the DSAN Software

DSAN software upgrades are performed via the DOCSIS® channel using the embedded cable modem (eCM). The methods used for triggering and transferring the software images are a limited implementation of the CableLabs® Common Download 2.0 specification. These methods are initiated and completed in a manner similar to a cable modem software download.

Two methods are supported that initiate the download and upgrade. The first is initiated by entries in the eCM configuration file, and occurs automatically during bootup of the DSAN if the upgrade image name is different from the currently executing image on the DSAN. The second is initiated manually by an operator using SNMP. Both methods transfer the software image via TFTP.

The downloaded image is a single monolithic image that contains all software including the host processor image, eCM image, and FPGA image. Prior to release, the monolithic image is signed with the Cisco digital signature, and may also be cosigned with a CableLabs or MSO digital signature. The signatures are used for image validation. The image is downloaded to the host processor flash memory and, upon successful download, executed after the DSAN reboots.

Automatic Upgrade via eCM Configuration File

Automatic upgrades may be triggered whenever the DSAN retrieves its eCM configuration file. The eCM configuration file is retrieved whenever the eCM registers with the CMTS, such as after a reboot. The eCM configuration file contains four entries used by the DSAN eCM to determine if a download is required and for download verification:

- Software Upgrade Filename - Filename of the software upgrade image.
- Software Upgrade TFTP server - IP address of the TFTP server that contains the software upgrade image.
- Software Admin Status (docsDevSwAdminStatus) - SNMP MIB object specified in the eCM config file. (See detailed description in SNMP section below.)
- Code Verification Certificate (CVC) - The CVC contained in the eCM is verified by the DSAN eCM against the CableLabs CVC to enable its ability to accept software upgrade files. The CVC may be the manufacturer CVC or a cosigner (CableLabs or MSO) CVC. The CVC is also used for image signature validation.

Upgrade Process Steps

To enable automatic upgrade via the eCM configuration file, edit the file as follows:

1. Set the eCM configuration file entries for Code Verification Certificate to **one** of the following:

- Manufacturer CVC if the image is not cosigned (that is, signed only by Cisco).
- Cosigner CVC if the image is cosigned.

2. Set the eCM configuration file entry for **Software Upgrade Filename** to the desired software image filename.
3. Set the eCM configuration file entry for **Software Upgrade TFTP Server** to the IP address of the TFTP server that contains the file listed above.

   Note: If the IP address is 0.0.0.0 or is completely missing, the upgrade will be performed using a file location from the same address as the DHCP offer.
4. Set the eCM configuration file entry for "docsDevSwAdminStatus" to **allowProvisioningUpgrade(2)**.

On the next reboot of the DSAN or the next retrieval of the eCM configuration file, the DSAN will commence the download, provided that:

- The CVC in the eCM configuration file matches the expected CVC (CableLabs CVC or cosigner CVC).
- The software image file is found on the TFTP server.

You can manually trigger the reboot using the SNMP MIB object **saDsanAdminReset** with a value of **sysreset(3)**. A power cycle of the DSAN will also trigger the software upgrade after the eCM configuration file is retrieved.

Manual Upgrade via SNMP

You can manually initiate a software upgrade using SNMP. Prior to upgrading, the DSAN eCM must be registered with the CMTS, and must have received a valid eCM configuration file with valid CVC(s) as outlined above.

Three objects in the DOCSIS MIB (DOCS-CABLE-DEVICE-MIB/docsDev, OID: 1.3.6.1.2.1.69) are then used to control the upgrade. These objects are described below.

docsDevSwFilename

This object holds the filename of the software image to be downloaded via TFTP. Unless set via SNMP, this is the filename or abs_path on the TFTP server that is used retrieve the software image filename during the boot process. If unknown, the string **unknown** is returned.

OID: 1.3.6.1.2.1.69.1.3.2

Type: SnmpAdminString

Permission: read-write

Status: Current

MIB: DOCS-CABLE-DEVICE-MIB

docsDevSwServer

This object holds the address of the TFTP server used for software upgrades. If the TFTP server is unknown, it returns **0.0.0.0**.

OID: 1.3.6.1.2.1.69.1.3.1

Type: IpAddress

Permission: Read-write

Status: Current

MIB: DOCS-CABLE-DEVICE-MIB

docsDevSwAdminStatus

If the value of this object is set to upgradeFromMgt(1), the device will initiate a TFTP software image download. After successfully receiving an image, the device will set its state to ignoreProvisioningUpgrade(3) and reboot. If the download process is interrupted (e.g., by a reset or power failure), the device will load the previous image and, after re-initialization, continue to attempt loading the image specified in docsDevSwFilename.

If set to allowProvisioningUpgrade(2), the device will use the software version information supplied by the provisioning server when next rebooting (this does not cause a reboot).

When set to ignoreProvisioningUpgrade(3), the device will disregard software image upgrade information from the provisioning server.

OID: 1.3.6.1.2.1.69.1.3.3

Type: INTEGER

Permission: Read-write

Status: Current

Values:

1: upgradeFromMgt

2: allowProvisioningUpgrade

3: ignoreProvisioningUpgrade

MIB: DOCS-CABLE-DEVICE-MIB

Upgrade Process Steps

To manually initiate the software upgrade using SNMP, perform these steps:

1 Ensure that the eCM configuration file contains the proper CVC, which is either:

- The manufacturer CVC, if the image is not cosigned (signed only by Cisco).
- The cosigner CVC, if the image is cosigned.

2 Set the docsDevSw objects as follows:

- Set "docsDevSwFilename" to the desired software image filename.
- Set "docsDevSwServer" to the IP address of the TFTP server that contains the file listed above.
- Set "docsDevSwAdminStatus" to **upgradeFromMgt (1)**.

Approximately 30 seconds after receiving the upgradeFromMgt command, the DSAN will commence the download, provided that:

- The CVC in the eCM software image file matches the expected CVC (CableLabs CVC or cosigner CVC).
- The software image file is found on the TFTP server.

Verifying Expected Results

You can obtain the eCM download status via SNMP using the DOCSIS MIB object **docsDevSwOperStatus**. When the download completes, you can then verify that the new image is running in the DSAN by querying the MIB object **docsDevSwCurrentVers**. The steps for performing these procedures are described below.

1 Obtain the eCM download status via SNMP.

Use the **docsDevSwOperStatus** object to review the current status of the eCM download. Possible values for this object are:

- InProgress(1) - Indicates that a TFTP download is underway, either as a result of a version mismatch at provisioning or as a result of a upgradeFromMgt request.
- CompleteFromProvisioning(2) - Indicates that the last software upgrade was a result of version mismatch at provisioning, and that the upgrade was initiated using the eCM configuration file.
- CompleteFromMgt(3) - Indicates that the last software upgrade was a result of setting docsDevSwAdminStatus to upgradeFromMgt, and that the upgrade was initiated using SNMP.
- Failed(4) - Indicates that the last attempted download failed, ordinarily due to TFTP timeout.

Upon successful completion of the upgrade, **docsDevSwOperStatus** reports either CompleteFromProvisioning(2) or CompleteFromMgt(3) as explained above.

Note: The docsDevSwOperStatus object has the following attributes.

OID: 1.3.6.1.2.1.69.1.3.4

Type: INTEGER

Permission: Read-only

Status: Current

MIB: DOCS-CABLE-DEVICE-MIB

2 Verify that the new image is running in the DSAN.

Use the **docsDevSwCurrentVers** object to identify the software image version number (e.g., **1.1.45**).

Note: The docsDevSwCurrentVers object has the following attributes.

OID: 1.3.6.1.2.1.69.1.3.5

Type: SnmpAdminString

Permission: Read-only

Status: Current

MIB: DOCS-CABLE-DEVICE-MIB

3 Perform additional monitoring via CLI as needed.

To perform additional monitoring of the download and upgrade, open a CLI session and observe CLI diag page 12.0. This page displays the current download status, and while a download is in progress, also displays the byte count.

```
---------------------------- Version Information ------------------------------

System Release Version:                1.1.52
Video Processor SW Version:            1.1.52
FPGA Version (main):                   006b (10/06/2011)
FPGA Version (cp):                     0007 (09/22/2009)
Bootloader Version:                    00.08
Hardware Revision:                     7.4
   Digital Board Rev:                  7
   RF Board Rev:                       4
Hardware ID:                           0654
Model Number:                          8200
Serial Number:                         DSBBBBBWK
Test Mode:                             Enabled

Software Download Status:              In Progress
   Image Size:                         29709824
   Downloaded:                         1433536
   Written:                            1433536


----- Pg: 12.0   <CR>:Refresh   p<CR>:Pg 11.0   n<CR>:Pg 13.0   x<CR>:Exit -----
>>>
```

Note: Software download may take several minutes to complete, and is followed by an automatic DSAN reboot, which may take another several minutes.

After the download has completed, the DSAN has rebooted, and the upgrade has successfully completed, the following status will be displayed on CLI diag page 12.0.

```
---------------------------- Version Information ------------------------------

System Release Version:                1.1.52
Video Processor SW Version:            1.1.52
FPGA Version (main):                   006b (10/06/2011)
FPGA Version (cp):                     0007 (09/22/2009)
Bootloader Version:                    00.08
Hardware Revision:                     7.4
   Digital Board Rev:                  7
   RF Board Rev:                       4
Hardware ID:                           0654
Model Number:                          8200
Serial Number:                         DSBBBBBWK
Test Mode:                             Enabled

Software Download Status:              Success




----- Pg: 12.0   <CR>:Refresh   p<CR>:Pg 11.0   n<CR>:Pg 13.0   x<CR>:Exit -----
>>>
```

4 The download status shown on page 12.0 is also available in the DSAN SNMP MIB in the object **saDsanSwImageDownloadStatus**.

This object has one of the following possible values indicating image download status.

- successful(1)
- unreachable(2)
- incomplete(3)
- inProgress(4)
- invalidImage(5)

Note: The saDsanSwImageDownloadStatus object has the following attributes.

OID: 1.3.6.1.4.1.1429.1.10.2.1.6.6

Type: INTEGER

Permission: Read-only

Status: Current

MIB: SA-DSAN-MIB

5 Upon successful download and upgrade, the following messages will be logged to the file /mnt/app0/dsanlog:

```
dsan dsanapp: APPLICATION, DOWNLOAD, 6, Software Download Started , 142
dsan dsanapp: APPLICATION, DOWNLOAD, 6, File Transfer Success - Filename: ,
143
dsan dsanapp: APPLICATION, DOWNLOAD, 6, Software Upgrade Success - Filename:
DSAN_1_1_30_1725_PKEY_DOC.simg , 6
```

Resolving Software Download Issues

This section describes issues commonly encountered during software download, along with their associated causes and possible remedies.

Download Does Not Start

Several conditions may cause a download to be rejected by the eCM before the image transfer begins.

- Invalid eCM configuration file
- File not available on TFTP server
- TFTP server error or invalid TFTP server IP address
- Unsigned or incorrectly signed software image

When this occurs, the eCM will log error messages that can be viewed on CLI diag page 4.2, as shown in the following example.

```
-------------------------------- Network Status --------------------------------

eCM Status Log

  Current Date/Time:  01-01-1970  00:48:50 UTC

    Empty
    01-01 00:01:52 - DOCSIS Subsystem Enabled
    01-01 00:01:58 - Rx Freq scanning started
    01-01 00:01:59 - scanning completed, freq = 555000000 Hz, qamMode = 1
    01-01 00:02:01 - started Tx ranging, UCID = 1
    01-01 00:02:02 - completed Tx ranging successfully, UCID = 1
    01-01 00:02:02 - started DHCP
    01-01 00:02:04 - eCM DHCP completed, IP = 192.168.18.69
    01-01 00:02:04 - started TFTP of eCM config file
    01-01 00:02:04 - completed TFTP of eCM config file
    01-01 00:02:04 - CMTS Registration Complete
    01-01 00:02:04 - in Two-Way operational state, UCID = 1
    01-01 00:02:04 - Acquired Interactive Status
    01-01 00:44:41 - started Upgrade
    01-01 00:48:39 - Upgrade failed

------ Pg:  4.2   <CR>:Refresh   p<CR>:Pg 4.1   n<CR>:Pg 4.3   x<CR>:Exit ------
>>>
```

Additionally, the failure will be logged to /mnt/app0/dsanlog.

To correct these conditions, perform the following steps.

1. Verify that the CVC in the eCM configuration file is for either the CableLabs Manufacturer CVC (for normal signed images) or the cosigner CVC (for cosigned images).
2. Verify that the TFTP server address used in the eCM configuration file (for automatic upgrades) or in the SNMP message used to set the docsDevSwServer object (for manual upgrades) is correct.

Note: If the IP address is 0.0.0.0 or is completely missing, the upgrade will be performed using a file location from the same address as the DHCP offer.

3. Verify that the eCM configuration file for docsDevSwAdminStatus is set to allowProvisioningUpgrade (for automatic upgrades).
4. Verify that the file specified in the eCM configuration file (for automatic upgrades) or in the docsDevSwFilename MIB objects (for manual upgrades) is correct and present on the specified TFTP server.
5. Verify that the DSAN can reach the TFTP server by pinging the DSAN eCM IP address shown on CLI diag page 4.0 from the TFTP server. For example:

   ```
   # ping 192.168.18.69
   ```

6. Verify that the correct signed image is being used. The images provided by Cisco are signed with the manufacturer CVC. If cosigning is required, the subsequently cosigned image must be used.

Download Completes, Upgrade Fails

A download may successfully complete, but the actual upgrade may still fail. This can occur when:

- The downloaded image does not match the target DSAN model (i.e., software downloaded to an 8200 is for 8250).
- A CRC error occurs in the file, possibly as a result of an error during download or flash write.

The above conditions will cause the upgrade status to be reported as **Invalid Image** or **Upgrade Incomplete** on the CLI diag page 12.0 and in the saDsanSwImageDownloadStatus MIB object. Additionally, the error will be logged to dsanlog.

To correct these conditions, perform the following steps.

1. Verify that the file specified in the eCM configuration file (for automatic upgrades) or in the docsDevSwFilename MIB objects (for manual upgrades) is for the proper platform.

   8200 platforms should use a filename in the following format:

   ```
   DSAN_w_x_y_zzz_PKEY_DOC.simg
   ```

2. If you suspect a CRC error, retry the download.

Error Messages

Each of the following conditions lists the associated messages that will be saved to the log files.

- Incorrect CVC in eCM configuration file, file not available on TFTP server, or TFTP server error:

  /mnt/app0/dsanlog:

  ```
  dsan dsanapp: APPLICATION, DOCSIS, 6, DOCSIS Software Upgrade Started ,
  143
  dsan dsanapp: APPLICATION, DOCSIS, 6, DOCSIS Software Upgrade Failed , 151
  ```

- Downloaded image does not match the target DSAN model

  /mnt/app0/dsanlog:

  ```
  dsan dsanapp: APPLICATION, DOCSIS, 6, DOCSIS Software Upgrade Started , 2
  dsan dsanapp: APPLICATION, DOWNLOAD, 6, Software Download Started , 3
  dsan dsanapp: APPLICATION, DOWNLOAD, 6, File Transfer Failed - Filename:
  UDSAN_2_0_25_1214.simg , 6
  dsan dsanapp: APPLICATION, DOCSIS, 6, DOCSIS Software Upgrade Failed , 7
  ```

9

Customer Information

If You Have Questions

If you have technical questions, call Cisco Services for assistance. Follow the menu options to speak with a service engineer.

Access your company's extranet site to view or order additional technical publications. For accessing instructions, contact the representative who handles your account. Check your extranet site often as the information is updated frequently.

A

Technical Information

Introduction

Before you begin installing and using your new system, you should review the equipment technical specifications.

Important: Specifications are subject to change without notice.

In This Appendix

DSAN Operating Parameters

The following DSAN operating parameters can be changed by the user. For more information, refer to the appropriate section of this document as indicated below.

Parameter	Documented In...
Reset the system	***Using CLI Commands*** (on page 76)
Use the Reverse Wink control	***Using CLI Commands*** (on page 76)
Enable or disable Mixed Services port	**TFTP Server** in ***Confirming Headend Support*** (on page 59)
Enable or disable Bypass port	**TFTP Server** in ***Confirming Headend Support*** (on page 59)
Set up output channel map	**TFTP Server** in ***Confirming Headend Support*** (on page 59)
Enable or disable craft interface	**TFTP Server** in ***Confirming Headend Support*** (on page 59)
Set up VCT ID	**TFTP Server** in ***Confirming Headend Support*** (on page 59)
Modify seed for Password of the Day	**TFTP Server** in ***Confirming Headend Support*** (on page 59)
Enable or disable Text mode	**TFTP Server** in ***Confirming Headend Support*** (on page 59)
Modify SNMP v1/v2c community string	**TFTP Server** in ***Confirming Headend Support*** (on page 59)
Set up auxiliary output channel map	**TFTP Server** in ***Confirming Headend Support*** (on page 59)
Change SNMP Manager information	***SNMP Management*** (on page 127)
EAS Action on Aux channels	***SNMP Management*** (on page 127)
Set SNMP alarm security levels	***SNMP Management*** (on page 127)

DSAN LED Indicators

The DSAN includes a set of LED indicators visible inside the housing on the digital lid assembly. The states of the LEDs indicate different DSAN operating conditions, as described below.

Power

The Power LED indicates that power is applied to the digital board, as follows:

State	Description
Off	DSAN powered off
Solid yellow	DSAN powered on

Note: The Power LED color was green on some early units. A yellow Power LED does not indicate a warning or error condition.

DOCSIS Status

The DOCSIS Status LED indicates eCM status, as follows:

State	Description
Off	eCM registration not started
Blinking yellow	eCM scanning for CMTS
Solid yellow	eCM upstream ranging in progress
Blinking green	eCM acquiring IP address
Solid green	eCM fully provisioned and has acquired an IP address through DHCP

Provisioning Status

The Provisioning Status LED indicates the status of eMDTA configuration file loading, as follows:

State	Description
Off	No configuration file available
Blinking yellow	Configuration in progress
Solid yellow	Configured using cached data
Solid green	Configured using downloaded data

Alarm Status

The Alarm Status LED indicates the presence of Major or Minor alarms, as follows:

State	Description
Solid green	No alarms present
Solid red	Minor alarm present
Flashing red	Major alarm present

Note: The Alarm Status LED ignores the Tamper Switch alarm, which goes active when the DSAN lid is opened to view the LEDs.

Output Channel Video Carrier Frequencies

The following table lists the 82 EIA channel numbers and their corresponding DSAN output video carrier frequencies. These carrier frequencies meet the specifications for the Standard Channel plan, but may differ slightly from the nominal channel plan. To accurately measure the DSAN RF levels, you may need to calibrate power meters to the following frequency chart. Failure to do so may result in inaccurate level settings that could adversely affect downstream quality and performance.

EIA Channel	Video Carrier Frequency (MHz)
2	55.25
3	61.25
4	67.25
5	77.25
6	83.25
95	91.2750
96	97.2750
97	103.2750
98	109.2750
99	115.2750
14	121.2625
15	127.2625
16	133.2625
17	139.2625
18	145.2625
19	151.2625
20	157.2625
21	163.2625
22	169.2625
7	175.2625
8	181.2625
9	187.2625
10	193.2625
11	199.2625
12	205.2625
13	211.2625
23	217.2625
24	223.2625

EIA Channel	Video Carrier Frequency (MHz)
25	229.2625
26	235.2625
27	241.2625
28	247.2625
29	253.2625
30	259.2625
31	265.2625
32	271.2625
33	277.2625
34	283.2625
35	289.2625
36	295.2625
37	301.2625
38	307.2625
39	313.2625
40	319.2625
41	325.2625
42	331.2750
43	337.2625
44	343.2625
45	349.2625
46	355.2625
47	361.2625
48	367.2625
49	373.2625
50	379.2625
51	385.2625
52	391.2625

EIA Channel	Video Carrier Frequency (MHz)
53	397.2625
54	403.2625
55	409.2625
56	415.2625
57	421.2625
58	427.2625
59	433.2625
60	439.2625
61	445.2625
62	451.2625
63	457.2625
64	463.2625
65	469.2625
66	475.2625
67	481.2625
68	487.2625
69	493.2625
70	499.2625
71	505.2625
72	511.2625
73	517.2625
74	523.2625
75	529.2625
76	535.2625
77	541.2625
78	547.2625

“Linear” Tilt Charts

Amplifier Output “Linear” Tilt Chart for 1 GHz

The following chart can be used to determine the operating level at a particular frequency considering the operating linear tilt.

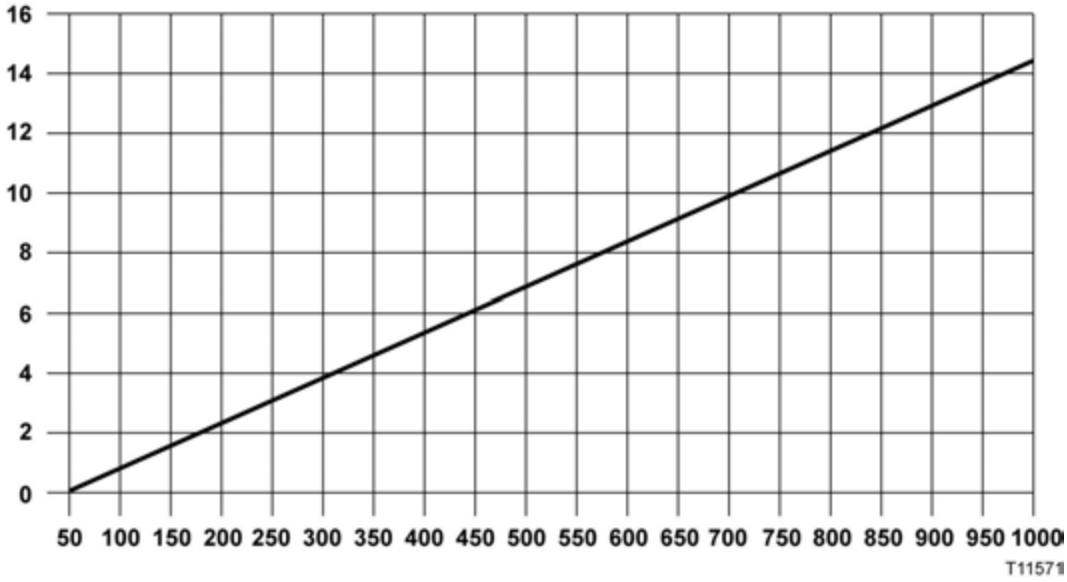

Example: If the amplifier’s 1 GHz output level is 49.0 dBmV with a linear operating tilt of 14.5 dB (from 50 to 1 GHz), the corresponding output level at 750 MHz would be 45.1 dBmV. This was found by taking the difference in tilt between 1 GHz and 750 MHz (14.5 – 10.6 = 3.9 dB). Then subtract the difference in tilt from the operating level (49.0 - 3.9 = 45.1 dBmV).

Amplifier Output "Linear" Tilt Chart for 870 MHz

The following chart can be used to determine the operating level at a particular frequency considering the operating linear tilt.

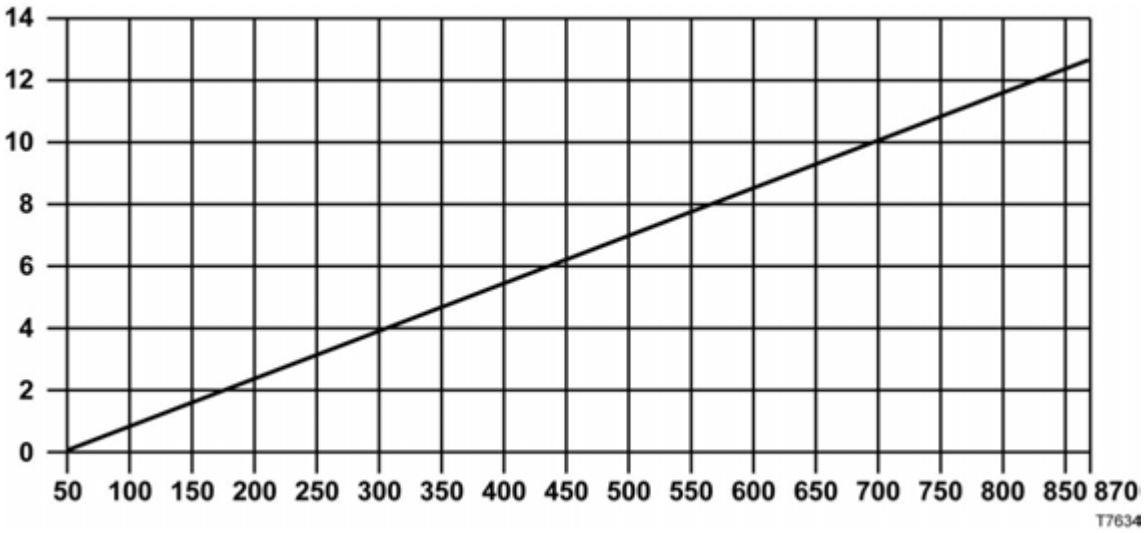

Example: If the amplifier's 870 MHz output level is 47.5 dBmV with a linear operating tilt of 12.5 dB (from 50 to 870 MHz), the corresponding output level at 650 MHz would be 44 dBmV. This was found by taking the difference in tilt between 870 and 650 MHz (12.5 - 9 = 3.5 dB). Then subtract the difference in tilt from the operating level (47.5 - 3.5 = 44 dBmV).

Forward Equalizer Loss Charts

1 GHz/870 MHz Forward Linear Equalizer Loss Chart

The following chart shows insertion loss for different EQ values at 1 GHz, 870 MHz, and various lower frequencies.

EQ Value	Insertion Loss at (MHz)									Total Tilt
(dB)	1000	870	750	650	600	550	86	70	52	(52-1000 MHz)
1.5	1.0	1.2	1.4	1.6	1.6	1.7	2.4	2.5	2.5	1.5
3.0	1.0	1.4	1.8	2.1	2.3	2.4	3.9	3.9	4.0	3.0
4.5	1.0	1.6	2.2	2.7	2.9	3.1	5.3	5.4	5.5	4.5
6.0	1.0	1.8	2.6	3.2	3.5	3.8	6.8	6.9	7.0	6.0
7.5	1.0	2.0	3.0	3.8	4.2	4.6	8.2	8.4	8.5	7.5
9.0	1.0	2.2	3.4	4.3	4.8	5.3	9.7	9.8	10.0	9.0
10.5	1.0	2.4	3.8	4.9	5.4	6.0	11.1	11.3	11.5	10.5
12.0	1.0	2.6	4.2	5.4	6.1	6.7	12.6	12.8	13.0	12.0
13.5	1.0	2.9	4.6	6.0	6.7	7.4	14.0	14.2	14.5	13.5
15.0	1.0	3.1	5.0	6.5	7.3	8.1	15.5	15.7	16.0	15.0
16.5	1.0	3.3	5.4	7.1	8.0	8.9	16.9	17.2	17.5	16.5
18.0	1.5	4.0	6.3	8.2	9.1	10.1	18.9	19.2	19.5	18.0
19.5	1.5	4.2	6.7	8.7	9.7	10.8	20.3	20.6	21.0	19.5
21.0	1.5	4.4	7.1	9.2	10.2	11.5	21.8	22.1	22.5	21.0

1 GHz/870 MHz Forward Inverse Cable Equalizer Loss Chart

The following table shows the 1 GHz and 870 MHz forward inverse cable equalizer loss.

Inv EQ Value (dB)		**Insertion Loss at (MHz)**									
1 GHz	**870 MHz**	**52**	**70**	**55**	**86**	**550**	**600**	**650**	**750**	**870**	**1000**
1.6	1.5	1.0	1.1	1.1	1.1	1.8	1.9	1.9	2.1	2.2	2.3
3.3	3.0	1.0	1.1	1.2	1.2	2.7	2.8	2.9	3.1	3.3	3.6
4.9	4.5	1.0	1.2	1.3	1.4	3.5	3.7	3.8	4.2	4.5	4.9
6.5	6.0	1.0	1.2	1.4	1.5	4.3	4.6	4.8	5.2	5.7	6.2
8.1	7.5	1.0	1.3	1.4	1.6	5.2	5.4	5.7	6.3	6.9	7.5
9.8	9.0	1.0	1.3	1.5	1.8	6.0	6.3	6.7	7.3	8.0	8.8
11.4	10.5	1.0	1.4	1.6	1.9	6.8	7.2	7.6	8.4	9.2	10.1
13.0	12.0	1.0	1.4	1.7	2.0	7.6	8.1	8.6	9.4	10.4	11.4
14.6	13.5	1.0	1.5	1.8	2.2	8.5	9.0	9.5	10.5	11.6	12.7
16.2	15.0	1.0	1.5	1.8	2.3	9.3	9.9	10.4	11.5	12.7	14.0

GainMaker Node Accessory Part Numbers

Attenuator Part Numbers

The following table provides part numbers and pad values for the GainMaker Node attenuators.

Attenuator Pad Value	Legacy Part Number	Current Part Number
0 dB - 870 MHz/1 GHz	589693	GM-PAD-1G-00=
0.5 dB - 870 MHz/1 GHz	589694	GM-PAD-1G-0.5=
1.0 dB - 870 MHz/1 GHz	589695	GM-PAD-1G-1.0=
1.5 dB - 870 MHz/1 GHz	589696	GM-PAD-1G-1.5=
2.0 dB - 870 MHz/1 GHz	589697	GM-PAD-1G-2.0=
2.5 dB - 870 MHz/1 GHz	589698	GM-PAD-1G-2.5=
3.0 dB - 870 MHz/1 GHz	589699	GM-PAD-1G-3.0=
3.5 dB - 870 MHz/1 GHz	589700	GM-PAD-1G-3.5=
4.0 dB - 870 MHz/1 GHz	589701	GM-PAD-1G-4.0=
4.5 dB - 870 MHz/1 GHz	589702	GM-PAD-1G-4.5=
5.0 dB - 870 MHz/1 GHz	589703	GM-PAD-1G-5.0=
5.5 dB - 870 MHz/1 GHz	589704	GM-PAD-1G-5.5=
6.0 dB - 870 MHz/1 GHz	589705	GM-PAD-1G-6.0=
6.5 dB - 870 MHz/1 GHz	589706	GM-PAD-1G-6.5=
7.0 dB - 870 MHz/1 GHz	589707	GM-PAD-1G-7.0=
7.5 dB - 870 MHz/1 GHz	589708	GM-PAD-1G-7.5=
8.0 dB - 870 MHz/1 GHz	589709	GM-PAD-1G-8.0=
8.5 dB - 870 MHz/1 GHz	589710	GM-PAD-1G-8.5=
9.0 dB - 870 MHz/1 GHz	589711	GM-PAD-1G-9.0=
9.5 dB - 870 MHz/1 GHz	589712	GM-PAD-1G-9.5=
10.0 dB - 870 MHz/1 GHz	589713	GM-PAD-1G-10.0=
10.5 dB - 870 MHz/1 GHz	589714	GM-PAD-1G-10.5=
11.0 dB - 870 MHz/1 GHz	589715	GM-PAD-1G-11.0=
11.5 dB - 870 MHz/1 GHz	589716	GM-PAD-1G-11.5=
12.0 dB - 870 MHz/1 GHz	589717	GM-PAD-1G-12.0=

Attenuator Pad Value	Legacy Part Number	Current Part Number
12.5 dB - 870 MHz/1 GHz	589718	GM-PAD-1G-12.5=
13.0 dB - 870 MHz/1 GHz	589719	GM-PAD-1G-13.0=
13.5 dB - 870 MHz/1 GHz	589720	GM-PAD-1G-13.5=
14.0 dB - 870 MHz/1 GHz	589721	GM-PAD-1G-14.0=
14.5 dB - 870 MHz/1 GHz	589722	GM-PAD-1G-14.5=
15.0 dB - 870 MHz/1 GHz	589723	GM-PAD-1G-15.0=
15.5 dB - 870 MHz/1 GHz	589724	GM-PAD-1G-15.5=
16.0 dB - 870 MHz/1 GHz	589725	GM-PAD-1G-16.0=
16.5 dB - 870 MHz/1 GHz	589726	GM-PAD-1G-16.5=
17.0 dB - 870 MHz/1 GHz	589727	GM-PAD-1G-17.0=
17.5 dB - 870 MHz/1 GHz	589728	GM-PAD-1G-17.5=
18.0 dB - 870 MHz/1 GHz	589729	GM-PAD-1G-18.0=
18.5 dB - 870 MHz/1 GHz	589730	GM-PAD-1G-18.5=
19.0 dB - 870 MHz/1 GHz	589731	GM-PAD-1G-19.0=
19.5 dB - 870 MHz/1 GHz	589732	GM-PAD-1G-19.5=
20.0 dB - 870 MHz/1 GHz	589733	GM-PAD-1G-20.0=
20.5 dB - 870 MHz/1 GHz	589734	GM-PAD-1G-20.5=

1 GHz/870 MHz Forward Linear Equalizer Part Numbers

The following table provides part numbers and corresponding EQ values for the forward linear equalizers available for 1 GHz/870 MHz GainMaker Node products.

Forward Linear EQ		**1 GHz EQ Value**	**870 MHz Equivalent EQ Value**
Legacy Part Number	**Current Part Number**		
4007228	GM-EQCBL-0-1G=	0 dB	0 dB
4008778	GM-EQCBL-1.5-1G=	1.5 dB	1.3 dB
4008779	GM-EQCBL-3-1G=	3.0 dB	2.6 dB
4008780	GM-EQCBL-4.5-1G=	4.5 dB	3.9 dB
4008781	GM-EQCBL-6-1G=	6.0 dB	5.2 dB
4008782	GM-EQCBL-7.5-1G=	7.5 dB	6.5 dB
4008783	GM-EQCBL-9-1G=	9.0 dB	7.8 dB
4008784	GM-EQCBL-10.5-1G=	10.5 dB	9.1 dB
4008785	GM-EQCBL-12-G=	12.0 dB	10.4 dB
4008786	GM-EQCBL-13.5-1G=	13.5 dB	11.6 dB
4008787	GM-EQCBL-15-1G=	15.0 dB	12.9 dB
4019258	GM-EQCBL-16.5-1G=	16.5 dB	14.2 dB
4019259	GM-EQCBL-18-1G=	18.0 dB	15.5 dB
4019260	GM-EQCBL-19.5-1G=	19.5 dB	16.8 dB
4019261	GM-EQCBL-21-1G=	21.0 dB	18.1 dB

1 GHz/870 MHz Forward Inverse Equalizer Part Numbers

The following table shows the part number and pad values for the GainMaker Node 1 GHz/870 MHz forward inverse equalizers.

Inverse EQ	Legacy Part Number	Current Part Number
1.6/1.5 dB – 1 GHz/870 MHz	4007486	GM-EQINV-1.6-1G=
3.3/3.0 dB - 1 GHz/870 MHz	4007487	GM-EQINV-3.3-1G=
4.9/4.5 dB - 1 GHz/870 MHz	4007488	GM-EQINV-4.9-1G=
6.5/6.0 dB - 1 GHz/870 MHz	4007489	GM-EQINV-6.5-1G=
8.1/7.5 dB - 1 GHz/870 MHz	4007490	GM-EQINV-8.1-1G=
9.8/9.0 dB - 1 GHz/870 MHz	4007491	GM-EQINV-9.8-1G=
11.4/10.5 dB - 1 GHz/870 MHz	4007492	GM-EQINV-11.4-1G=
13.0/12.0 dB - 1 GHz/870 MHz	4007493	GM-EQINV-13-1G=
14.6/13.5 dB - 1 GHz/870 MHz	4007494	GM-EQINV-14.6-1G=
16.2/15.0 dB - 1 GHz/870 MHz	4007495	GM-EQINV-16.2-1G=

Specifications

Torque Specifications

Fastener	Torque Specification	Illustration
Seizure nut	2 to 5 ft-lb (2.7 to 6.8 Nm)	
Strand clamp mounting bracket bolts	5 to 8 ft-lb (6.8 to 10.8 Nm)	
Pedestal mounting bolts	8 to 10 ft-lb (10.8 to 13.6 Nm)	
75 Ω terminator	Per manufacturer instructions	(Appearance varies by manufacturer)
RF amplifier cover screws	10 to 13 in-lb (1.1 to 1.5 Nm)	
Power supply, and high-pass filter module shoulder screws	18 to 20 in-lb (2.0 to 2.3 Nm)	
Housing closure bolts	5 to 12 ft-lb (6.8 to 16.3 Nm)	
Housing plugs Test point port plugs	5 to 8 ft-lb (6.8 to 10.8 Nm)	
RF cable connector	Per manufacturer instructions	

Glossary

A

ampere. A unit of measure for electrical current.

ac, AC

alternating current. An electric current that reverses its direction at regularly recurring intervals.

AGC

automatic gain control. A process or means by which gain is automatically adjusted in a specified manner as a function of input level or other specified parameters.

analog channel

A channel that occupies a fixed location in a 6 MHz bandwidth within the 54 MHz to 550 MHz range of the RF band. Analog video channels deliver one traditional broadcast television channel in each 6 MHz band.

attenuation

The difference between transmitted and received signal strength due to loss through equipment, lines, or other transmission medium. Usually expressed in decibels.

channel map

A logical element that links a service with a channel so that the service can be viewed or used by the subscriber. For example, a channel map could link The Golf Channel with channel 63 so that when subscribers tune to channel 63, they view The Golf Channel.

CLI

command line interface. A command reference software that allows the user to interact with the operating system by entering commands and optional arguments.

CW

continuous wave.

dB

decibel. One tenth of a bel, the number of decibels denoting the ratio of two amounts of power being ten times the common logarithm of this ratio.

dBm

decibels relative to 1 milliwatt.

dBmV

decibels relative to 1 millivolt.

dBW

decibels relative to 1 watt.

dc, DC

direct current. An electric current flowing in one direction only and substantially constant in value.

DHCP

dynamic host configuration protocol. TCP/IP protocol that manages a pool of IP addresses.

DNCS

Digital Network Control System. A computer workstation that defines, organizes, monitors, and controls the components, features, and applications supported by the DBDS. The DNCS provides Cisco Explorer DHCTs with broadcast services that are displayed on subscribers' televisions throughout a cable network. The DNCS works with the ATM switch and the Ethernet router providing data throughout the DBDS. The DNCS uses multi-mode fiber to transfer data through the ATM switch to the router. Data is sent in ATM cells over PVCs.

DSAN

digital service access node.

EMC

electromagnetic compatibility. A measure of equipment tolerance to external electromagnetic fields.

EQ

equalizer.

equalization

The process of compensating for an undesired result. For example, equalizing tilt in a distribution system.

FCC

Federal Communications Commission. Federal organization set up by the Communications Act of 1934 which has authority to regulate all inter-state (but not intra-state) communications originating in the United States (radio, television, wire, satellite, and cable).

forward path

Signal direction from the headend to the set-top terminal.

ft-lb

foot-pound. A measure of torque defined by the application of one pound of force on a lever at a point on the lever that is one foot from the pivot point.

gain

A measure of the increase in signal level, relative to a reference, in an amplifier. Usually expressed in decibels.

GHz

Gigahertz. A unit of frequency equal to one billion cycles per second.

headend

The local switching or processing center for the cable network in a hybrid fiber/coax network. Location for equipment that receives data from a satellite (or other) source and reformats that data for input to a broadband distribution network.

Hertz

A unit of frequency equal to one cycle per second.

HFC

hybrid fiber/coaxial. A network that uses a combination of fiber optics and coaxial cable to transport signals from one place to another. A broadband network using standard cable television transmission components, such as optical transmitters and receivers, coaxial cable, amplifiers, and power supplies. The broadband output stream is transmitted as an optical signal, over the high-speed, fiber optic transmission lines to local service areas where it is split, converted to electrical RF signals, and distributed to set-tops over coaxial cable.

I/O

input/output.

in-lb

inch-pound. A measure of torque defined by the application of one pound of force on a lever at a point on the lever that is one inch from the pivot point.

IP address

Internet protocol address. A 32-bit sequence of numbers used for routing IP data. Each IP address identifies a specific component on a specific network. The address contains a network address identifier and a host identifier.

LED

light-emitting diode. An electronic device that lights up when electricity passes through it.

Mbps

megabits per second. A unit of measure representing a rate of one million bits (megabits) per second.

MDU

multiple dwelling unit.

MHz

megahertz. A unit of measure representing one million cycles per second; measures bandwidth.

N-cm

Newton centimeter

Nm

Newton meter. A measure of torque defined by the application of one Newton of force on a lever at a point on the lever that is one meter from the pivot point. (1 Nm = 0.737561 ft-lb)

node

Any device such as a PC that is connected to a network, or a branching or exchange point.

OID

object identifier.

provisioning

The process of preparing a device or service so that it operates properly and its control system recognizes it.

PWB

printed wiring board.

QAM

quadrature amplitude modulation. An amplitude and phase modulation technique for representing digital information and transmitting that data with minimal bandwidth. Both phase and amplitude of carrier waves are altered to represent the binary code. By manipulating two factors, more discrete digital states are possible and therefore larger binary schemes can be represented.

QAM256

A QAM technique that produces 256 discrete states, each state representing 8 bits of information. The most complex of common QAM techniques.

QAM64

A QAM technique that produces 64 discrete states, each state representing 6 bits of information.

reverse path

Signal flow direction toward the headend.

RF

radio frequency. The frequency in the portion of the electromagnetic spectrum that is above the audio frequencies and below the infrared frequencies, used in radio transmission systems.

RMA

return material authorization. A form used to return products.

RX

receive or receiver.

S/N or SNR

signal-to-noise ratio. The ratio, in decibels, of the maximum peak-to-peak voltage of the video signal, including synchronizing pulse, to the root-mean-square voltage of the noise. Provides a measure and indication of signal quality.

SI

system or service information. Tuning information sent from the DNCS to DHCTs which provides the information that DHCTs need to be able to tune to a particular service.

SNMP

simple network management protocol. A protocol that governs network management and the monitoring of network devices and their functions.

strand mount

Installed equipment on an above-ground strand.

TCP/IP

transmission control protocol/Internet protocol. Two interrelated protocols that are part of the Internet protocol suite. TCP operates on the OSI transport layer and breaks data into packets. IP operates on the OSI network layer and routes the packets. While IP takes care of handling the actual delivery of the data, TCP takes care of keeping track of the individual units of data (called packets) that a message is divided into for efficient routing through the Internet.

TFTP

trivial file transfer protocol.

tilt

Spectral display slope caused by different attenuation of high frequencies and low frequencies through a medium.

torque

A force that produces rotation or torsion. Usually expressed in lb-ft (pound-feet) or N-m (Newton-meters). The application of one pound of force on a lever at a point on the lever that is one foot from the pivot point would produce 1 lb-ft of torque.

trap

An unsolicited message sent by a network device to notify a network or element management system of an alarm or other condition that requires administrative attention.

TX

transmit or transmitter.

V

volt.

V AC

volts alternating current.

V DC

volts direct current.

W

watt. A measure of electrical power required to do work at the rate of one joule per second. In a purely resistive load, 1 Watt = 1 Volt x 1 Amp.

Index

U

V

W

Americas Headquarters
Cisco Systems, Inc.
170 West Tasman Drive
San Jose, CA 95134-1706
USA

http://www.cisco.com
Tel: 408 526-4000
800 553-6387
Fax: 408 527-0883

This document includes various trademarks of Cisco Systems, Inc. Please see the Notices section of this document for a list of the Cisco Systems, Inc. trademarks used in this document.
Product and service availability are subject to change without notice.
© 2009-2013 Cisco and/or its affiliates. All rights reserved.

September 2013
Part Number OL-29943-01